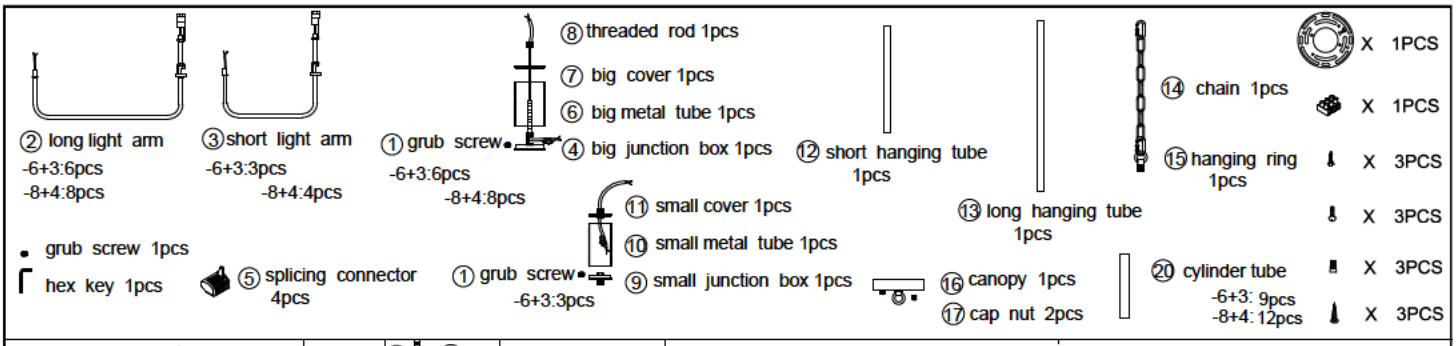

the grub screw ① is already in the hole of big junction box ④!!!

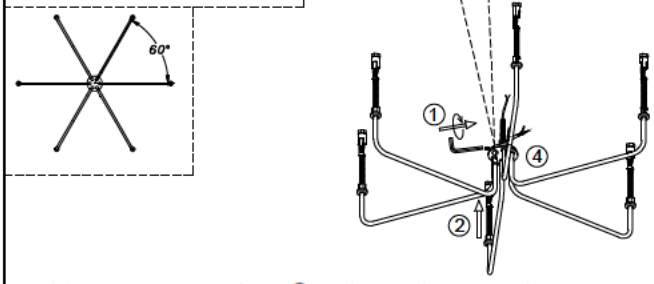

1. Let the wire of long light arm ② go through the big junction box ④ , use hex key to rotate the grub screw ① to fasten the arms to the junction box ④ ,adjust the arms to suitable position like picture shown.

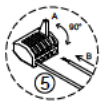

1.Pull the orange operating handle A to open the inlet hole, insert the wire B.
2.Press the operating handle A to finish wiring.
(Note: one inlet hole can put 2 or 3 wires inside)

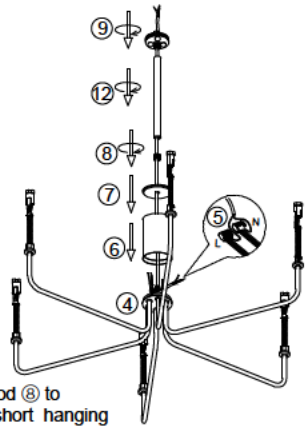

2. Connect all the wires by parallel with connectors ⑤ (all live- L use one connector,and neutral line-N use other connector).
3.Let the main wire go through the big metal tube ⑥, big cover ⑦ and threaded rod ⑧,rotate the threaded rod ⑧ to fix all to the light fixture ,let the wire go through the short hanging tube ⑫ and small junction box ⑨,rotate to fasten both to the light fixture.

the grub screw ① is already in the hole of small junction box ⑨!!!

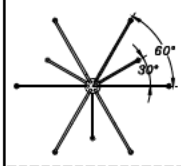

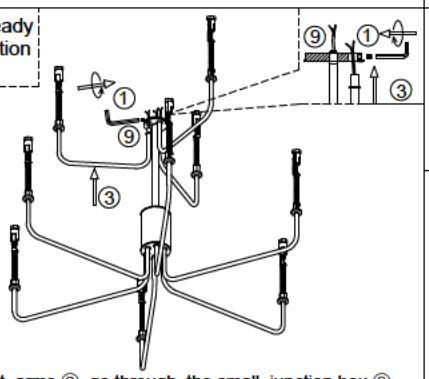

4. Let the wire of short light arms ③ go through the small junction box ⑨ , use hex key to rotate the grub screw ① to fasten the arms ③ to the junction box ⑨ ,adjust the arms to suitable position like picture shown.

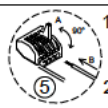

1.Pull the orange operating handle A to open the inlet hole, insert the wire B.
2.Press the operating handle A to finish wiring.
(Note: one inlet hole can put 2 or 3 wires inside)

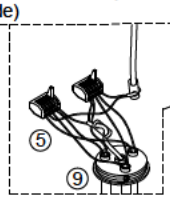

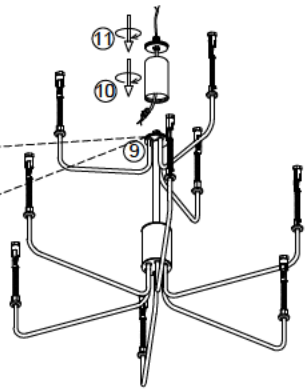

5. Connect all the wires by parllel with connectors ⑤ (all live- L use one connector,and neutral line-N use other connector).
6. Rotate to fasten the small metal tube ⑩ and cover ⑪ to the light fixture.

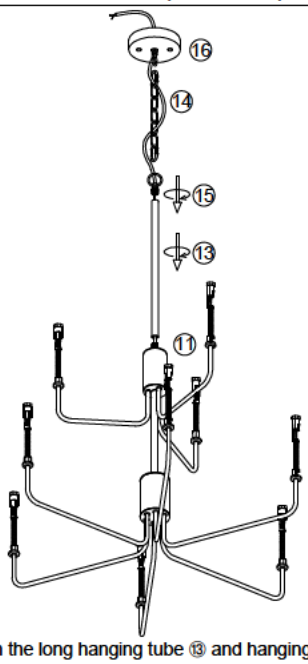

7. Let the wire go through the long hanging tube ⑬ and hanging ring ⑮,rotate to fix both to light fixture.
8. Hang the fixture to the canopy ⑯ with chain ⑭ ,let the wire go through the chain ⑭ and caopy ⑯.

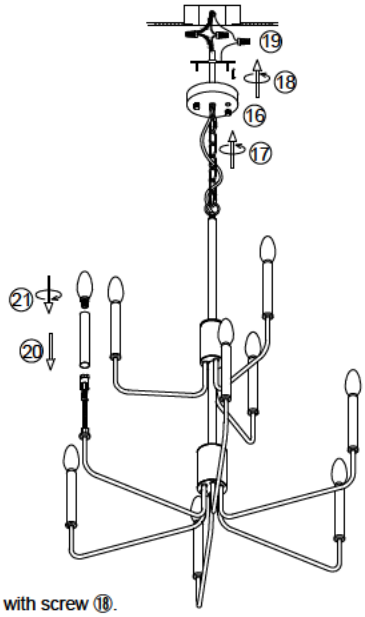

9.Install the bracket to the ceiling junction box with screw ⑱.
10.Connect the wire to your home line with connector ⑲.
11.Install the fixture to the bracket with cap nut ⑰.
12.Put the cylinder tube ⑳ on the bulb holder and Install the bulb ㉑.

Please read carefully before installation!!!
Note : Please make sure that the electricity is powered off during installation !
Only a professional electrician should install this kind of product !