Assembly instruction

INTRODUCTION

Thank you for purchasing our products. Please read the instructions carefully before installation and keep it in a safe place for future reference. If you need any assistance or support, please feel free to contact our customer support team.

PRECAUTIONS

1. There are many components and accessories in the package. Each component and accessory is labeled with a letter or a number, check carefully before using any of them. Keep them away from children to prevent accidents.

2. Please install the product on a clean and soft underlay (such as carpet or cardboard) to avoid scratching or damaging the surface of the product.

3. The main components of the product are relatively heavy. Please pay attention to safety during installation.

4. The product is not stable during installation. Please do not move it randomly before it is completely installed.

5. This product requires two people to install.

6. if you have any questions during installation, please contact the customer service in time.

* PLEASE BE SURE TO FOLLOW THE INSTALLATION STEPS IN THE MANUAL TO AVOID UNNECESSARY LOSSES CAUSED BY IMPROPER INSTALLATION.

* IF YOU NEED FURTHER ASSISTANCE, PLEASE CONTACT THE CUSTOMER SERVICE ONLINE.

HARDWARE LIST

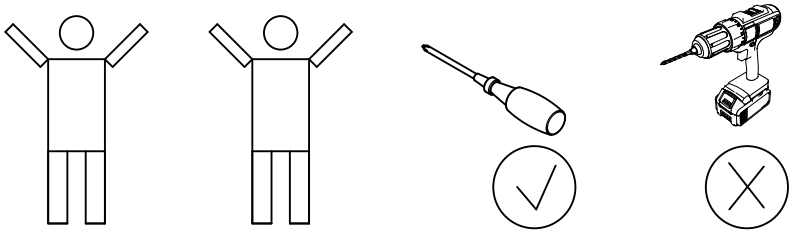

A 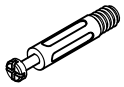 37PCS	B 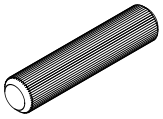 Ø8x30 14PCS	C 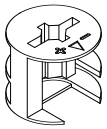 37PCS	D 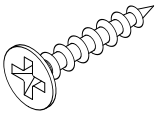 3.5X25 2PCS	E  3.5X12 30PCS
F 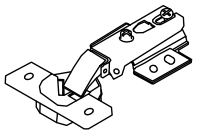 4PCS	G  Ø7*35 2PCS	H  4*70mm 2PCS	I 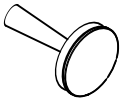 2PCS	J  2PCS
K  2PCS				

PARTS LIST

1 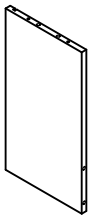 1PC	2 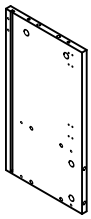 1PC	3 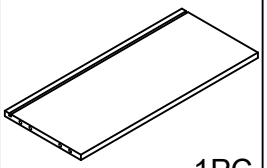 1PC	4 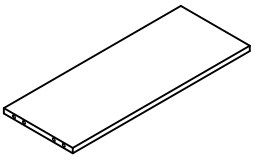 1PC	5 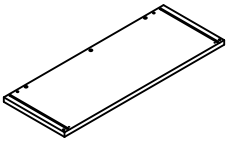 1PC
6  3PCS	7 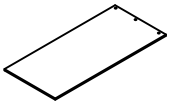 2PCS	8 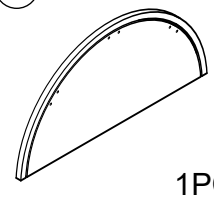 1PC	9 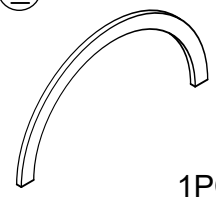 1PC	10 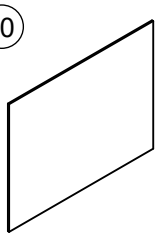 1PC
11  2PCS	12  1PC	13 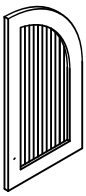 1PC	14 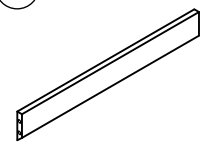 1PC	15 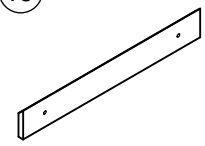 1PC

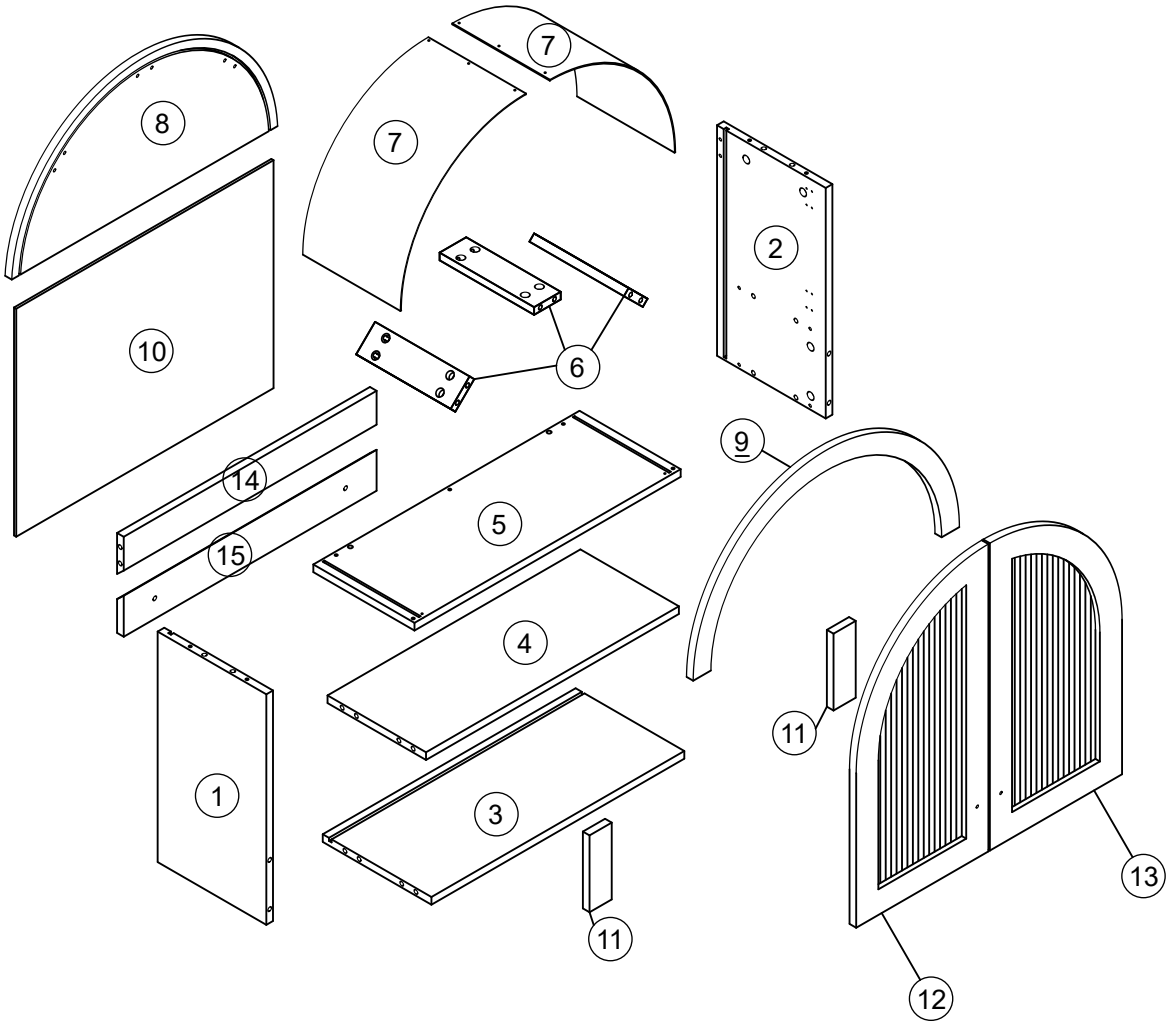
7
8
7
2
10
6
9
14
5
15
4
1
3
11
11
13
12

STEP 1

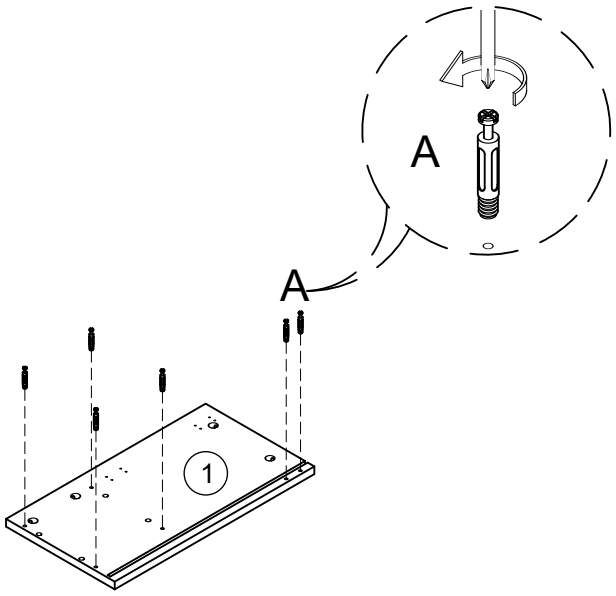

A x 6PCS

STEP 2

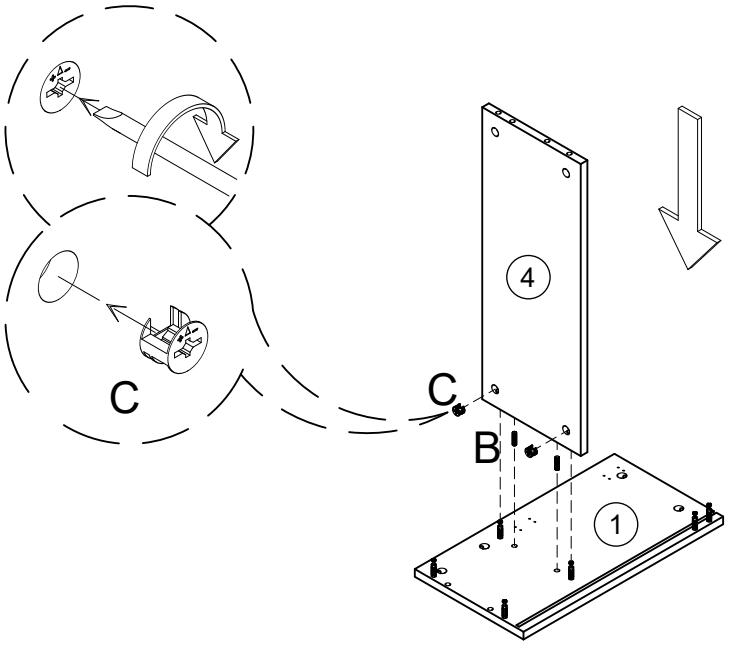

C x 2PCS

B x 2PCS

STEP 3

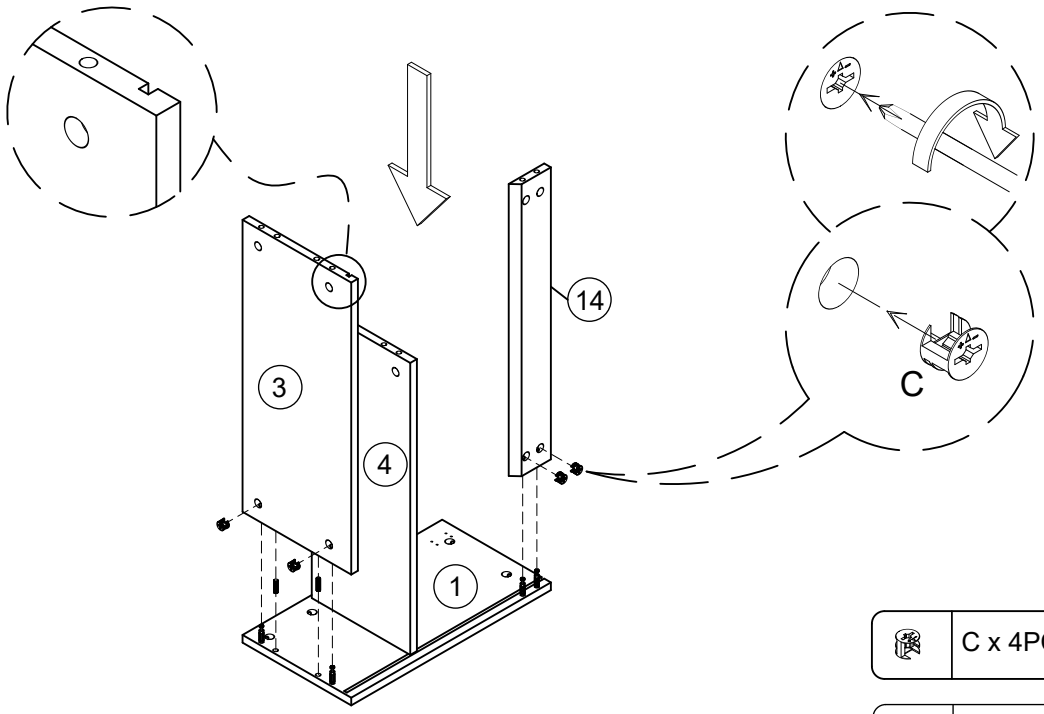

	C x 4PCS
	B x 2PCS

STEP 4

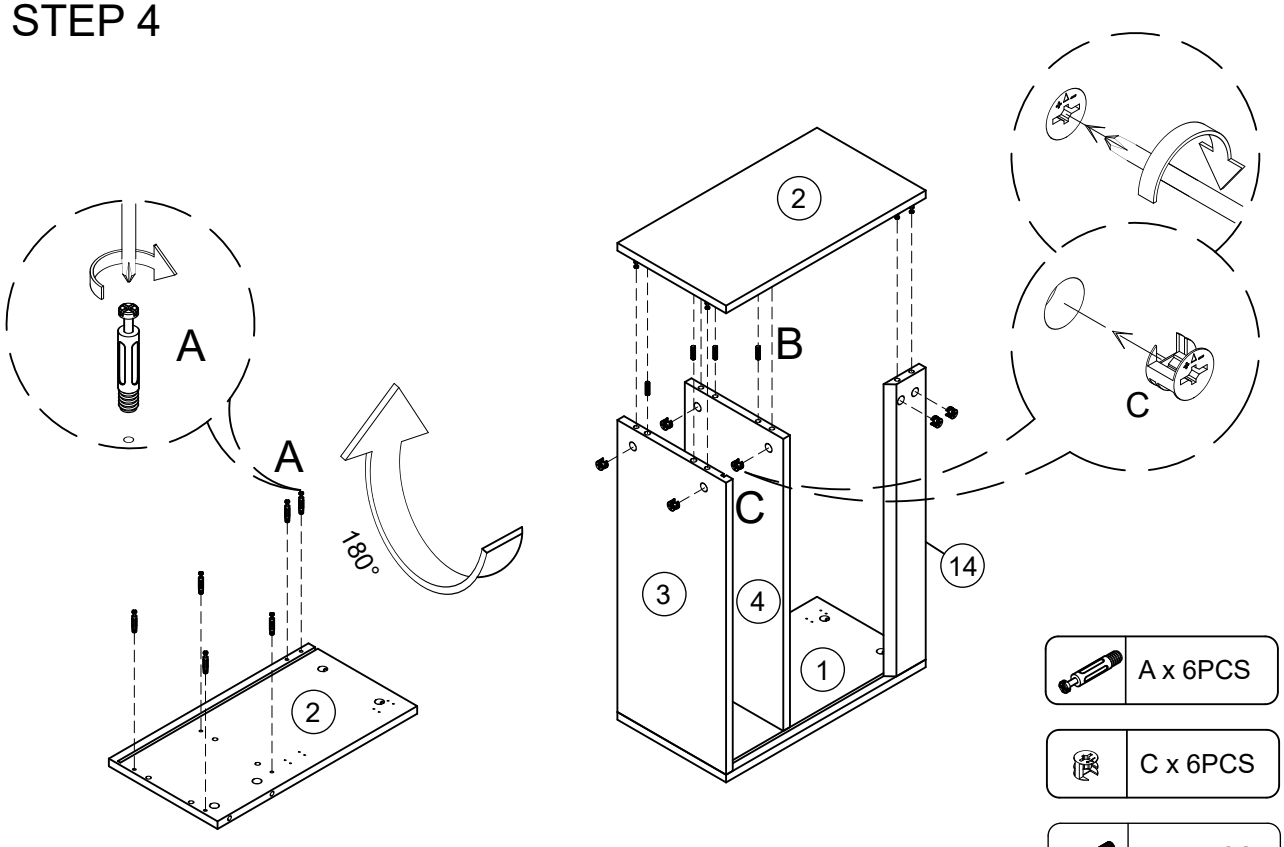

	A x 6PCS
	C x 6PCS
	B x 4PCS

STEP 5

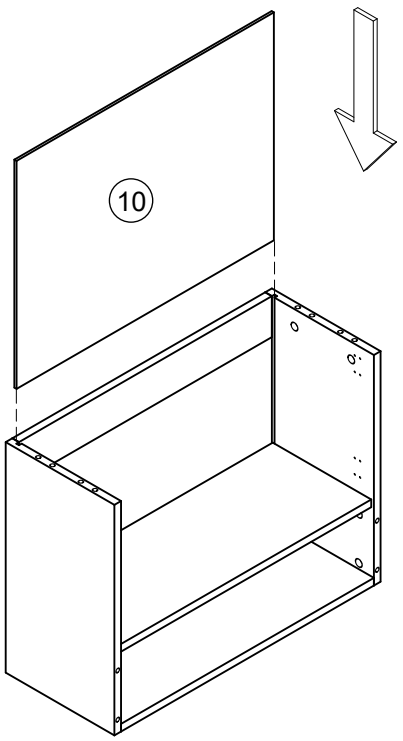

STEP 6

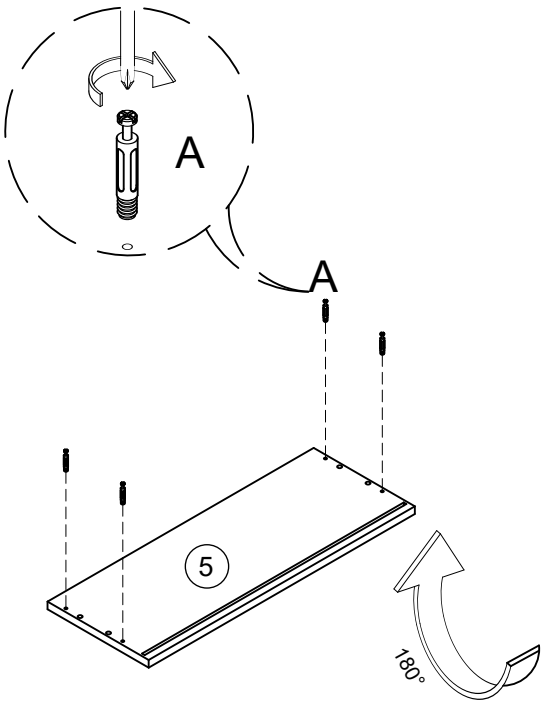

 A x 4PCS

STEP 7

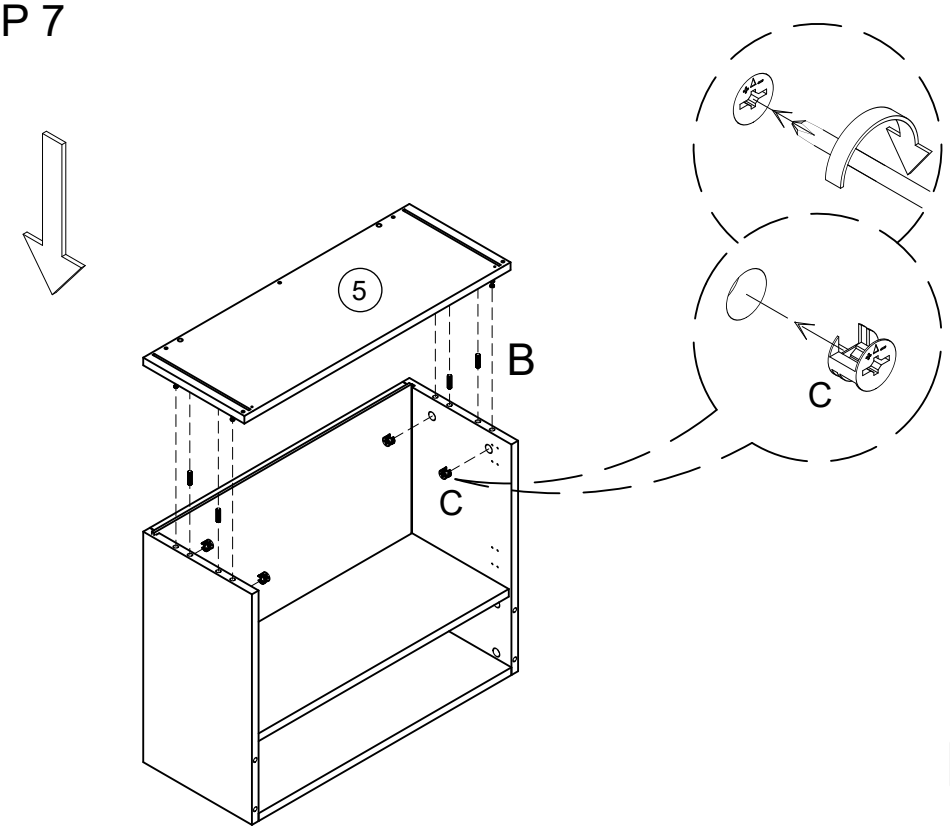

	C x 4PCS
	B x 4PCS

STEP 8

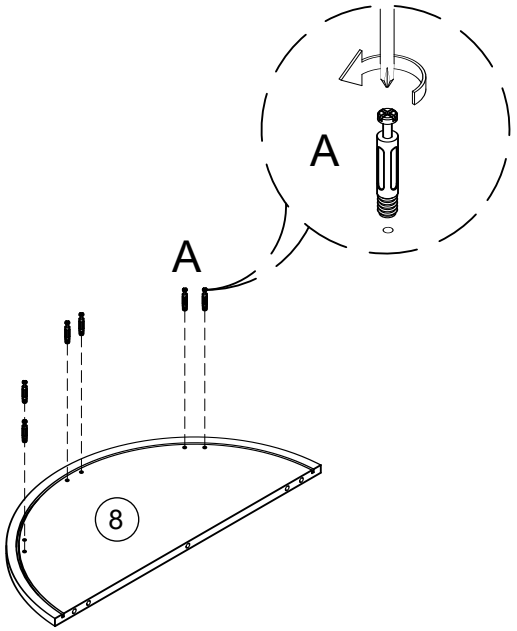

	A x 6PCS

STEP 9

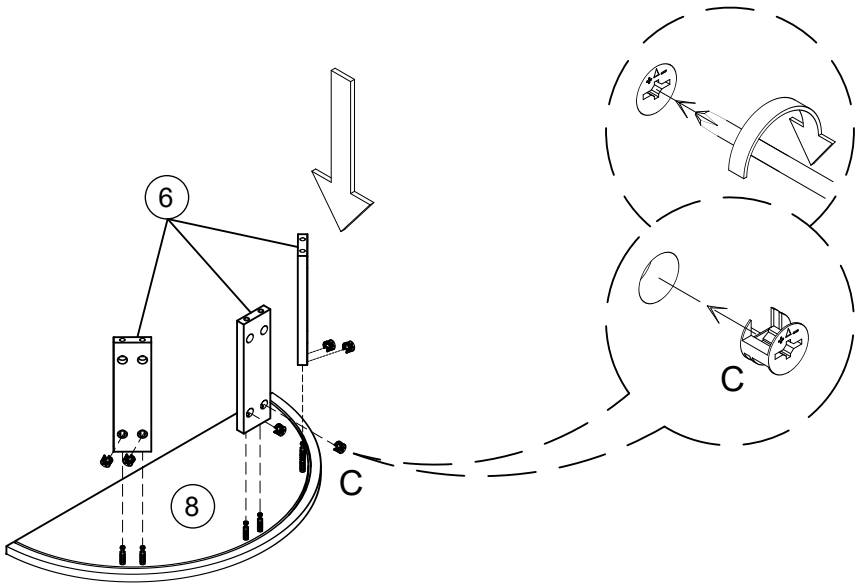

C x 6PCS

STEP 10

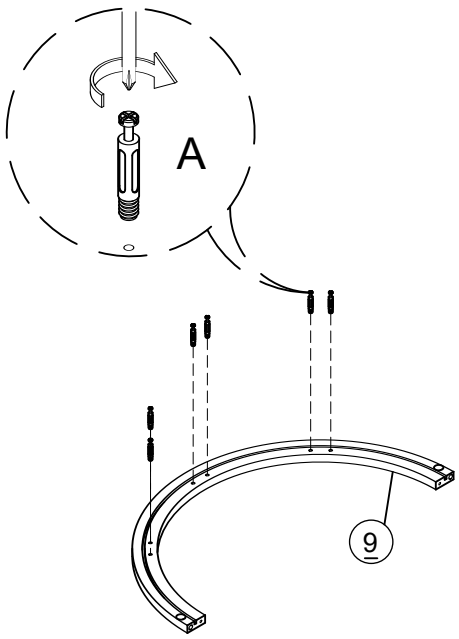

A x 6PCS

STEP 11

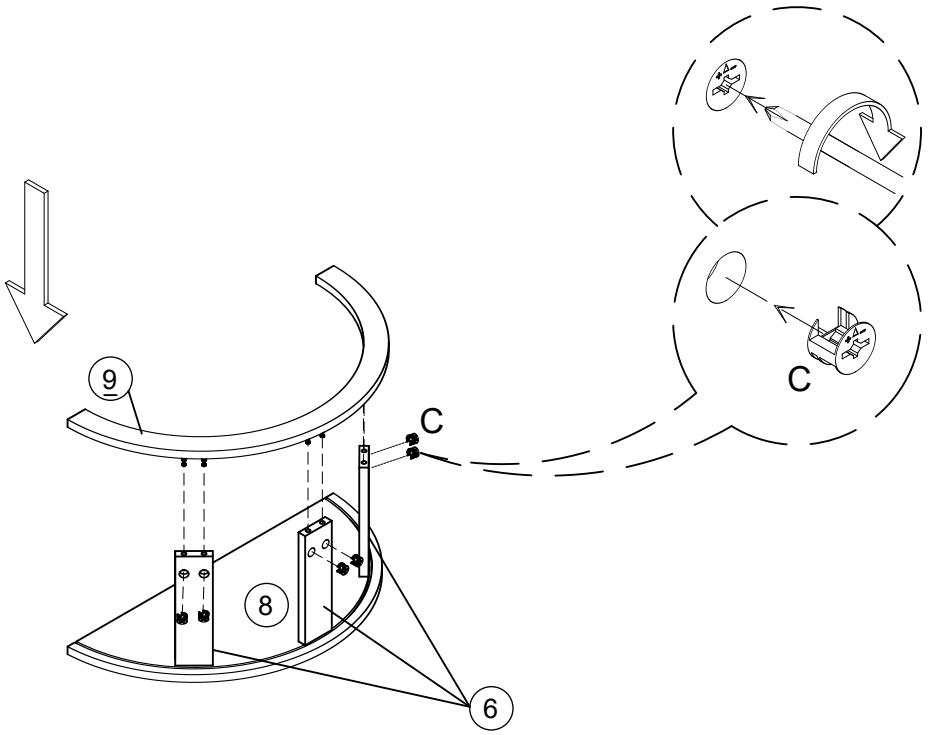

	C x 6PCS

STEP 12

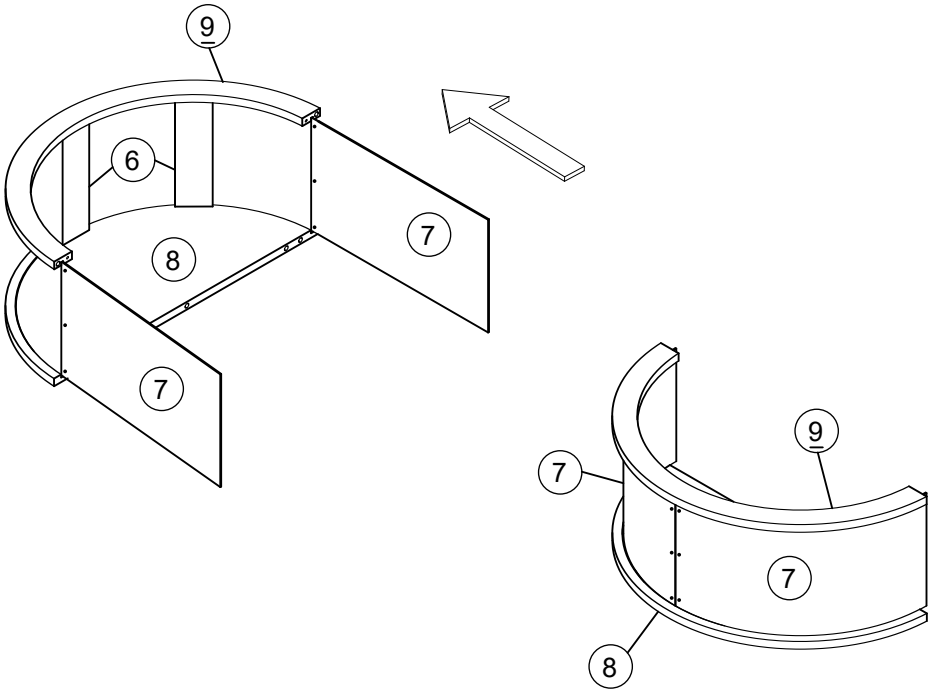

STEP 13

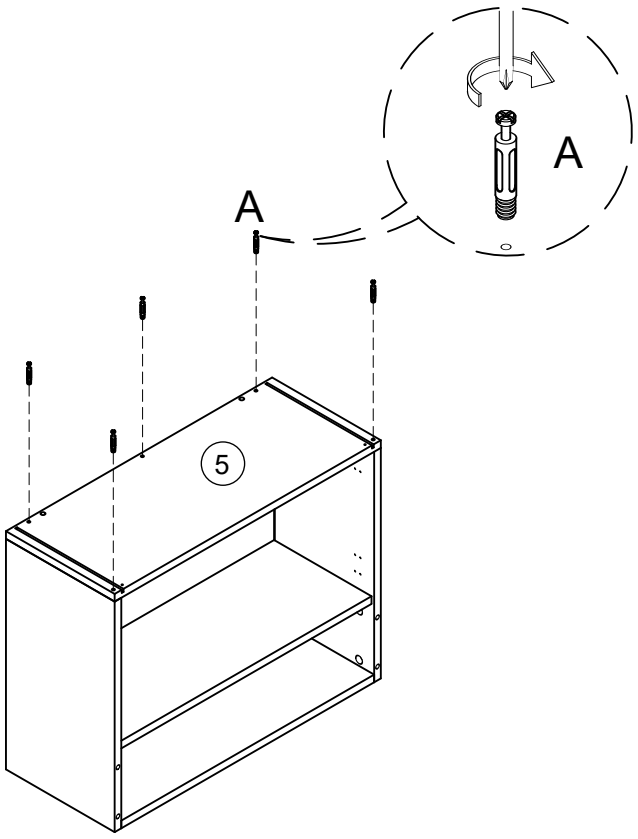

A x 5PCS

STEP 14

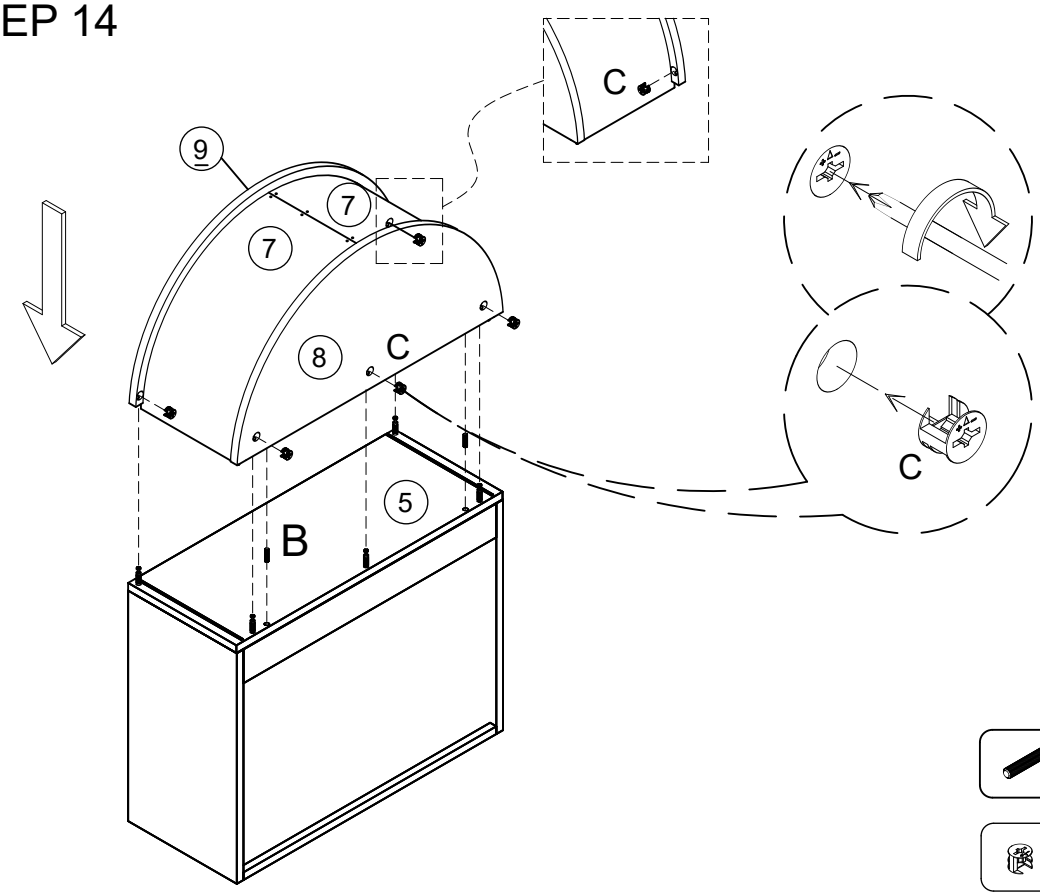

B x 2PCS

C x 5PCS

STEP 15

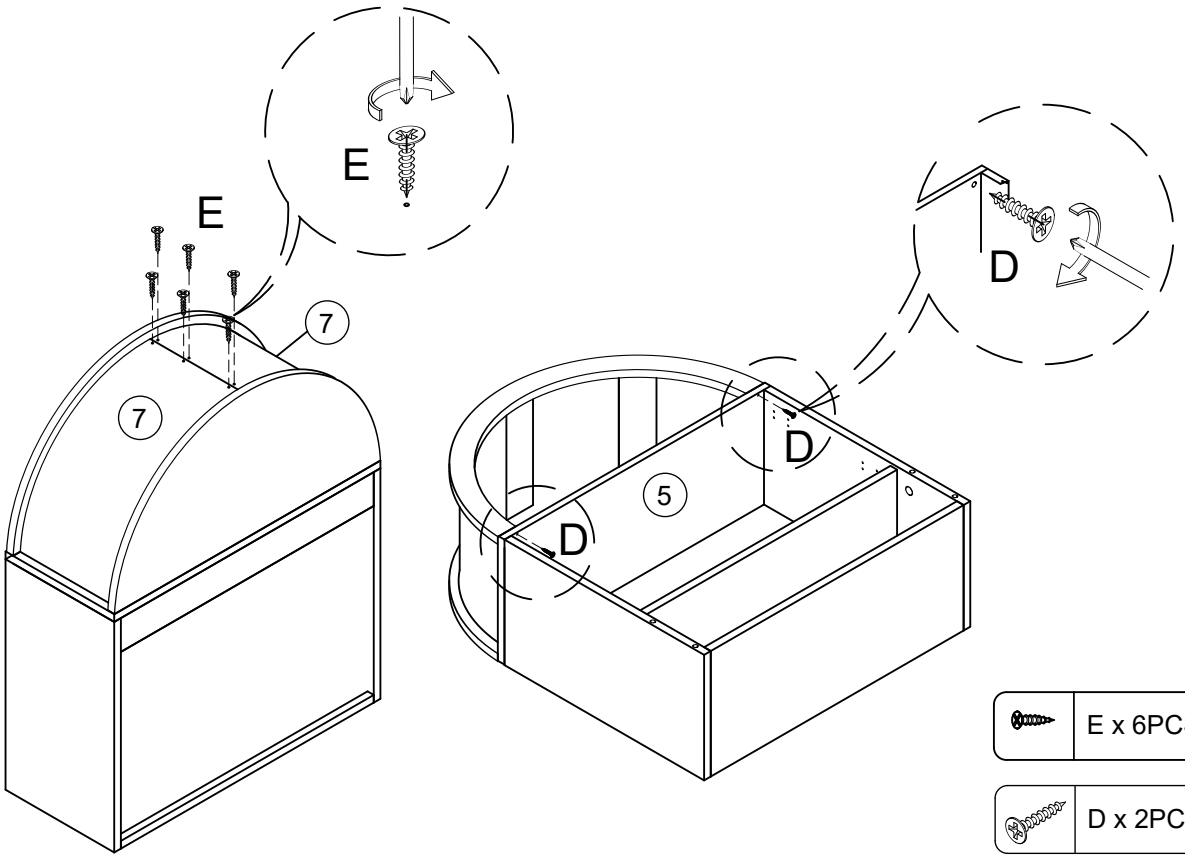

E x 6PCS

D x 2PCS

STEP 16

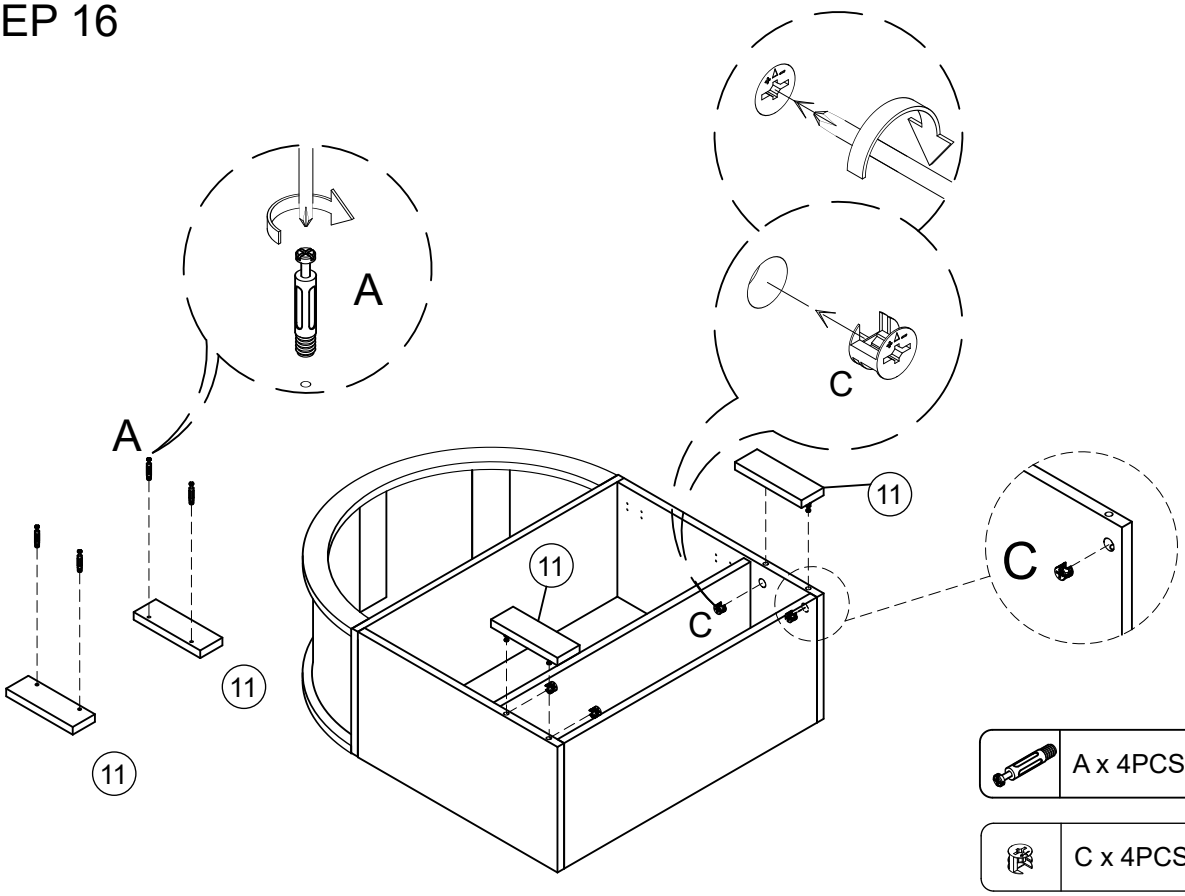

A x 4PCS

C x 4PCS

STEP 17

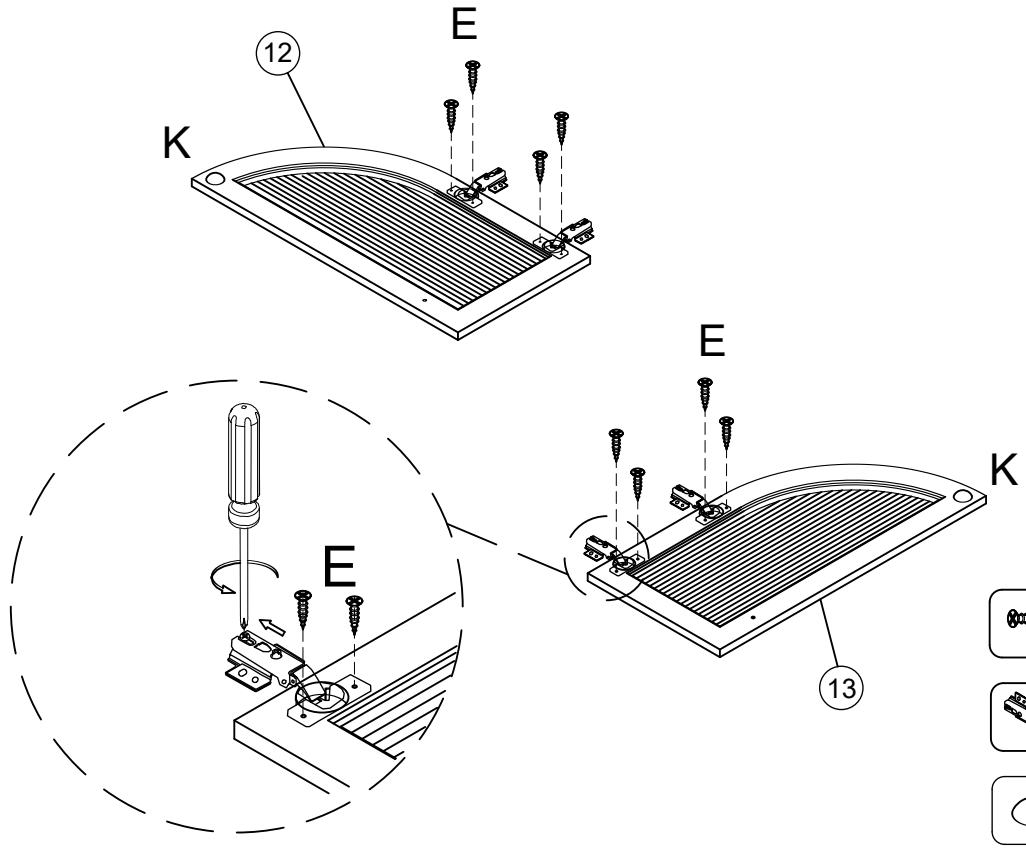

E x 8PCS

Fx4PCS

K x 2PCS

STEP 18

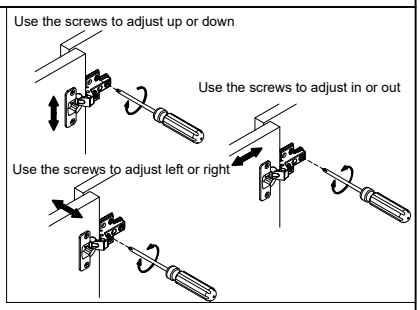

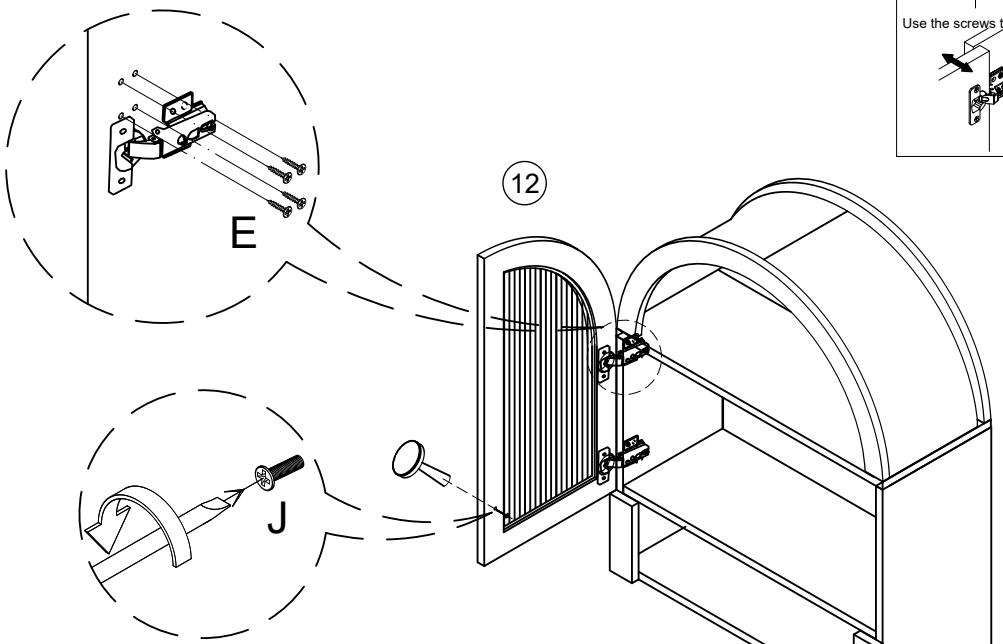

E x 8PCS

I x 1PC

J x 1PC

STEP 19

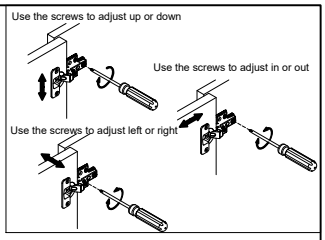

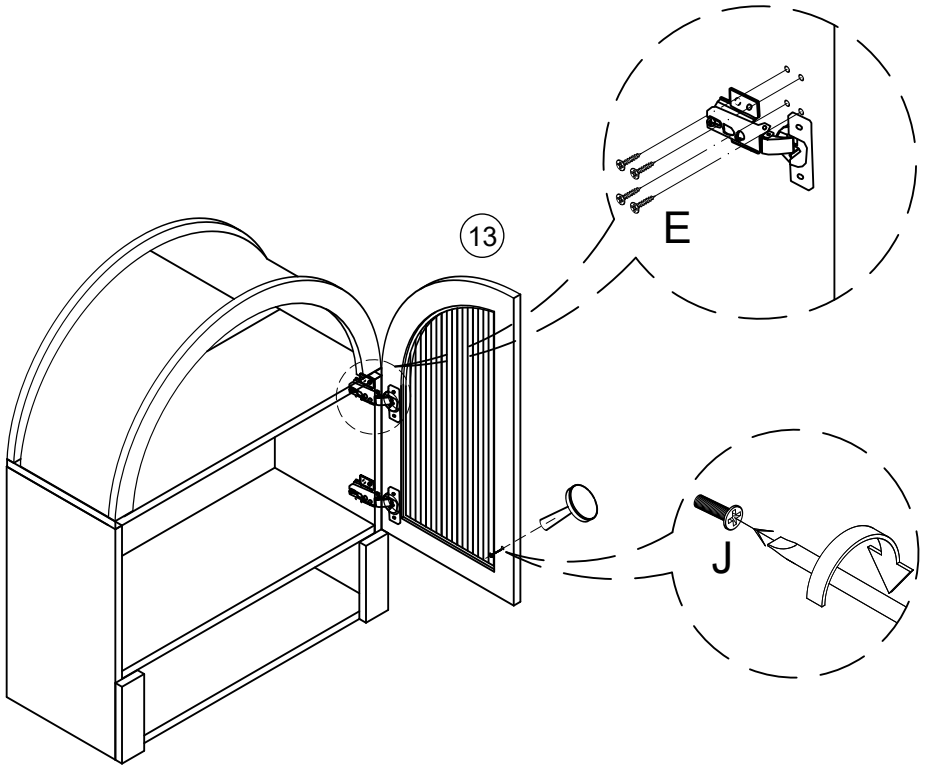

	E x 8PCS
	I x 1PC
	J x 1PC

STEP 20

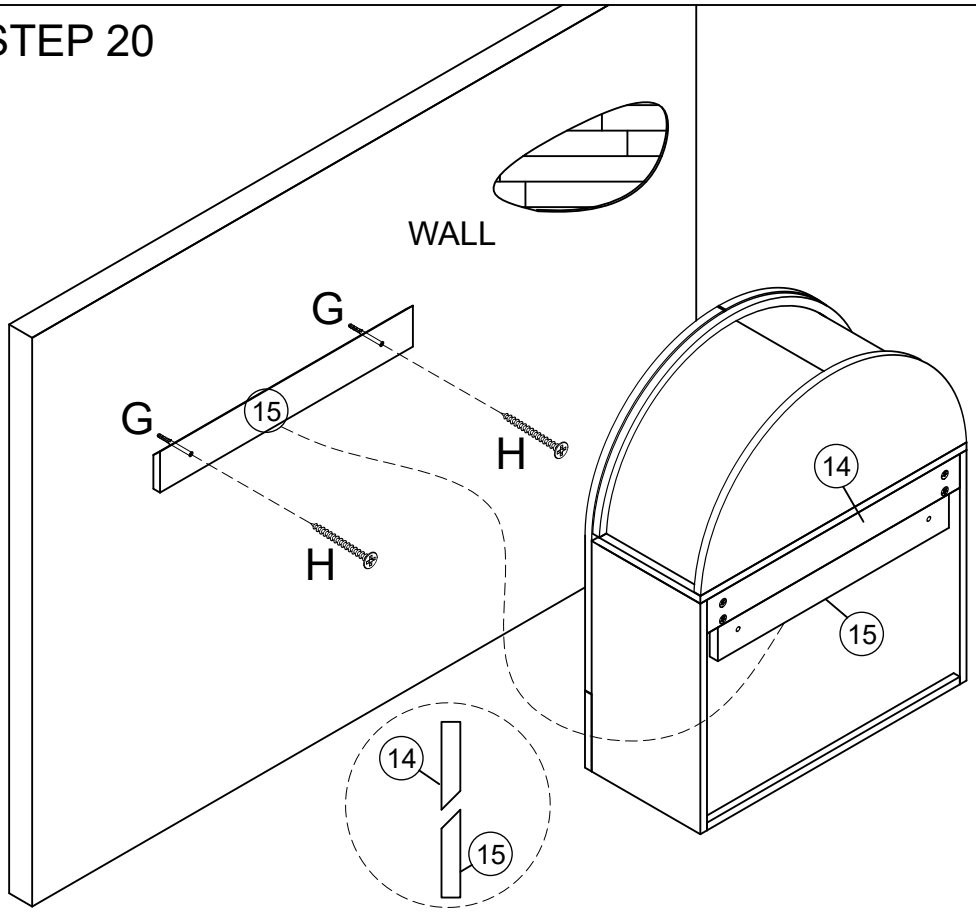

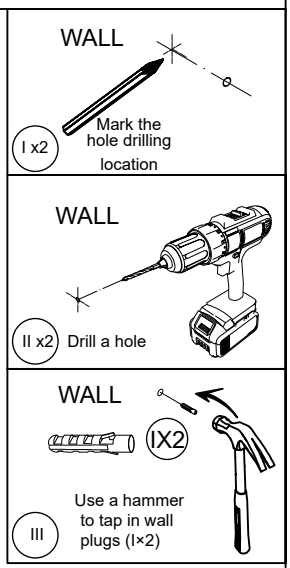

	G x 2PCS
	H x 2PCS

STEP 21

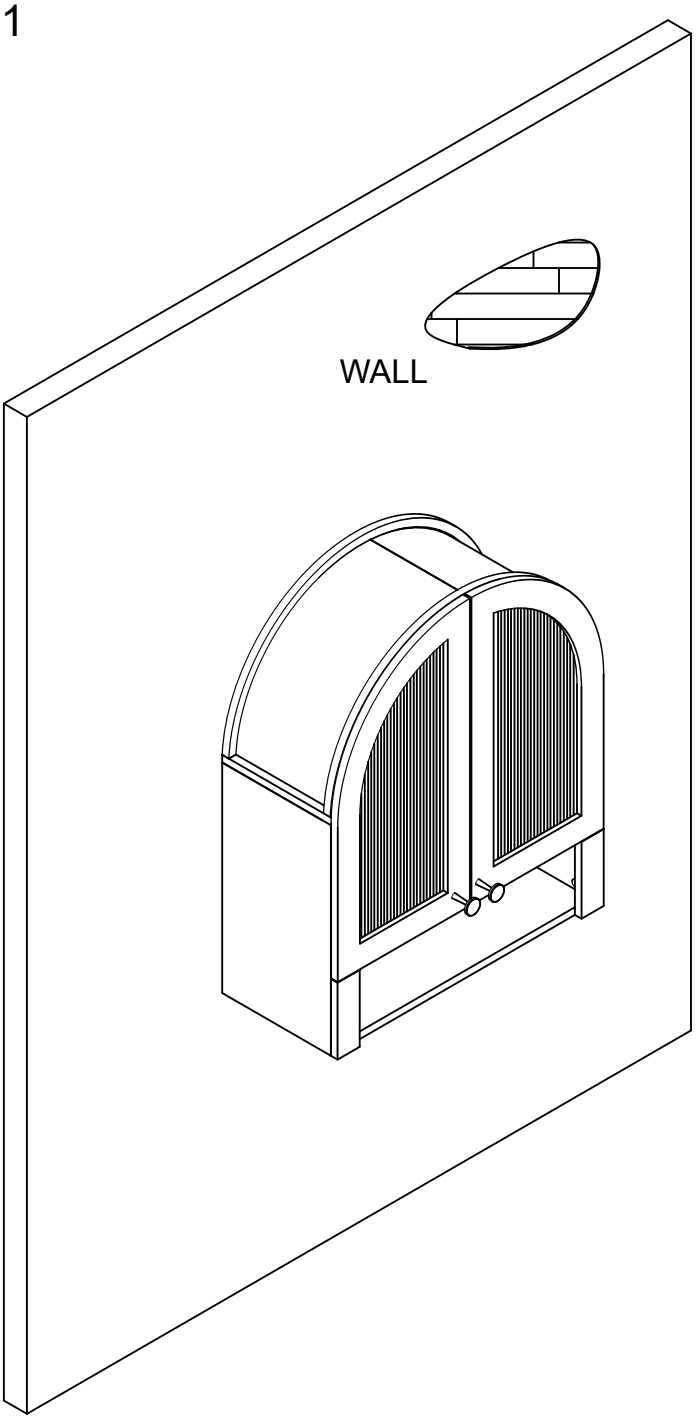

COMPLETE

HINGE ADJUSTMENTS

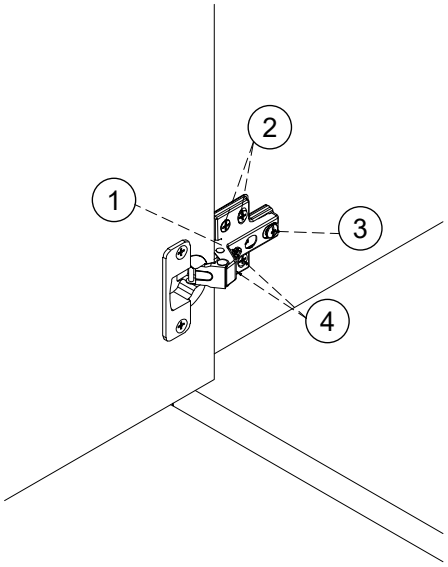

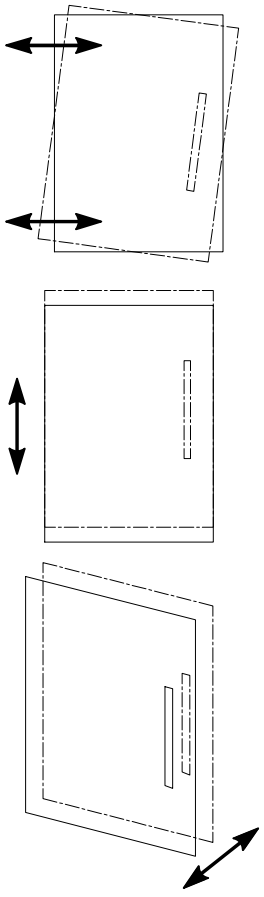

①Sideways / Tilt adjustment

Turn the screw
clockwise to move the door further away from the side of the cabinet
anticlockwise to move the door closer to the side of the cabinet

②④ Height adjustment

While supporting the weight of the door, turn the screws
clockwise to move the door up
anticlockwise to move the door down

③ Forward and back adjustment