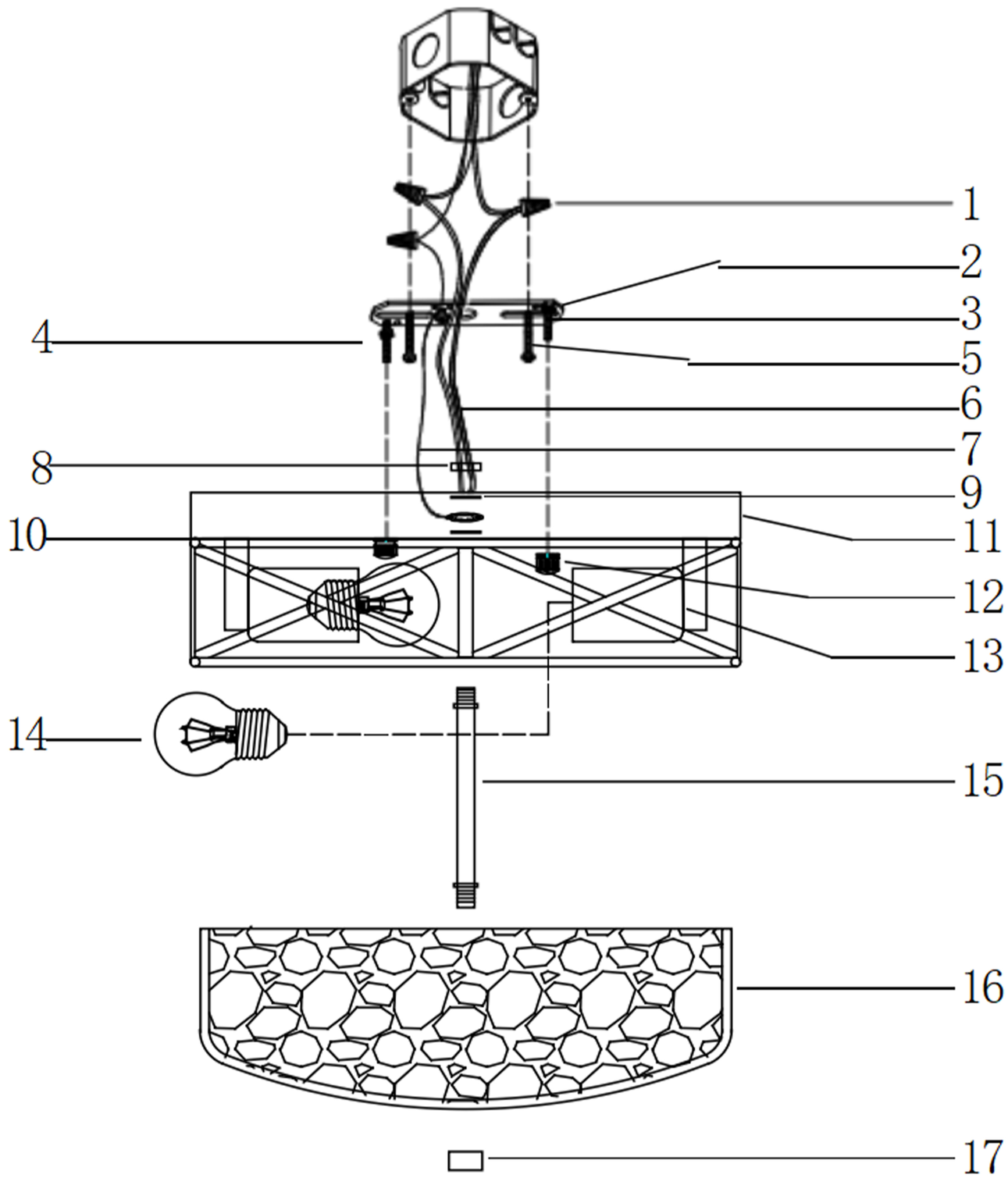

Installation Steps：

Step 1: Secure the mounting plate(2) to the junction box with screws (5).
Step 2: Put the straight tube (15) through the straight side of the basin (11) spacer (10) ground wire (7) spacer (9) with nuts (8) tightening.
Step 3: Connect the lamp body power cord (6) to the external power cord with a wiring cap (1), and the ground wire (7) is fixed with a green ground screw, and then connected to the external ground wire with a wiring cap (1).
Step 4: Use the nut (12) (4) screws (3) to fix the straight side basin (11) on the mounting plate (2) .
Step 5: Install the light bulb (not included) (14) to the lamp head (13).
Step 6: Pass lamp shade (16) through straight tube (15) and secure with fittings (17).

Accessories：

Part 2：Mounting Plate*1	
Part 3/4：Mounting Screw,nut*2	
Part 5：Mounting Screw*2	
Part 1：Wiring cap*3	
Part 12：Nut*2	
Part 7/8/9/10/15：Straight tube+spacer*2 + ground wire+nut*1	
Part 16：Glass Cover*1	
Part 17：Fittings*1	

Notice： This light fixture should be installed in accordance with all applicable, local installation codes, and by a person familiar with the construction and operation of it, as well as the hazards involved. Inspect items and contents carefully. If any damage or defect is found, do not install it.