6440-36-10
+6440-60-10

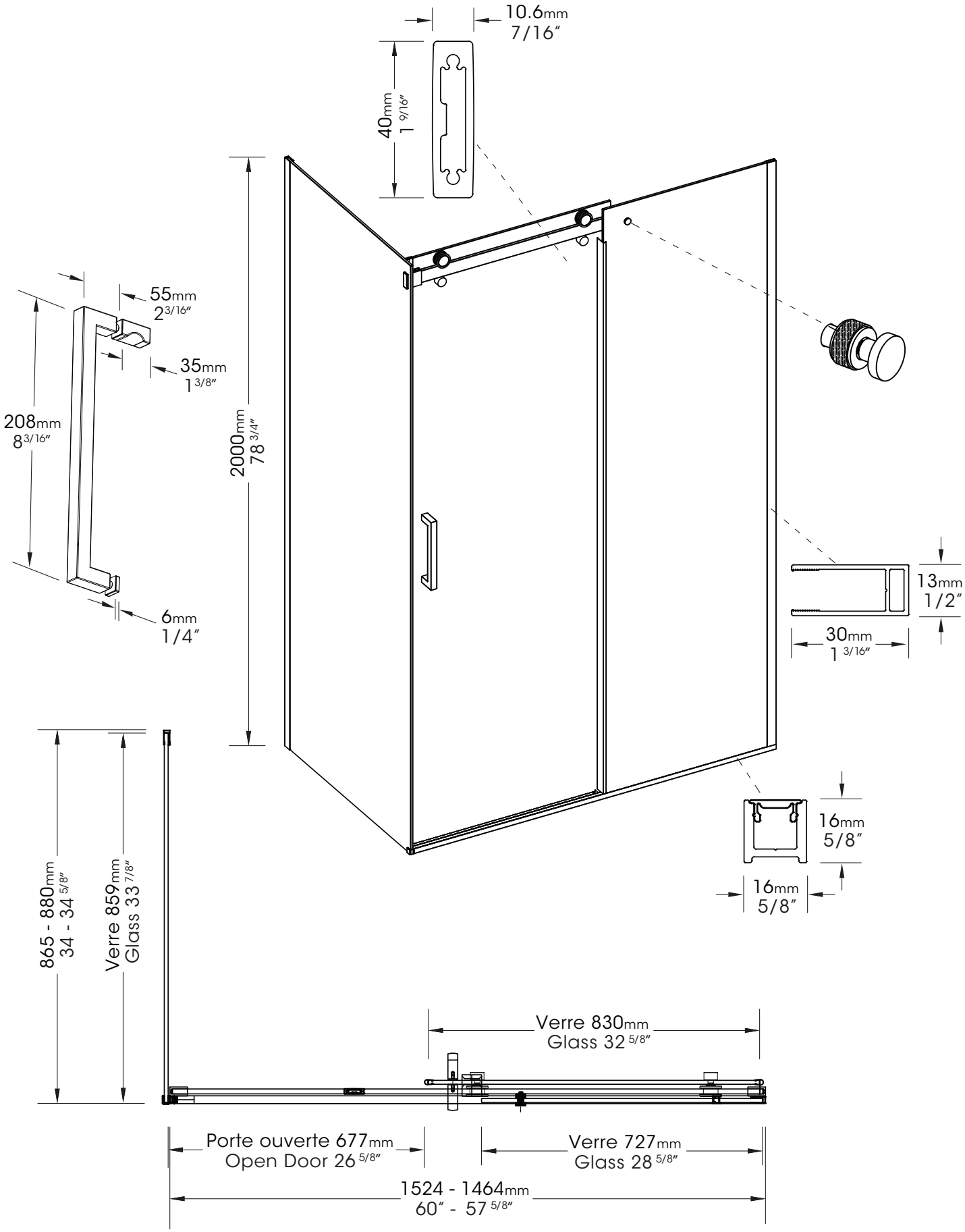

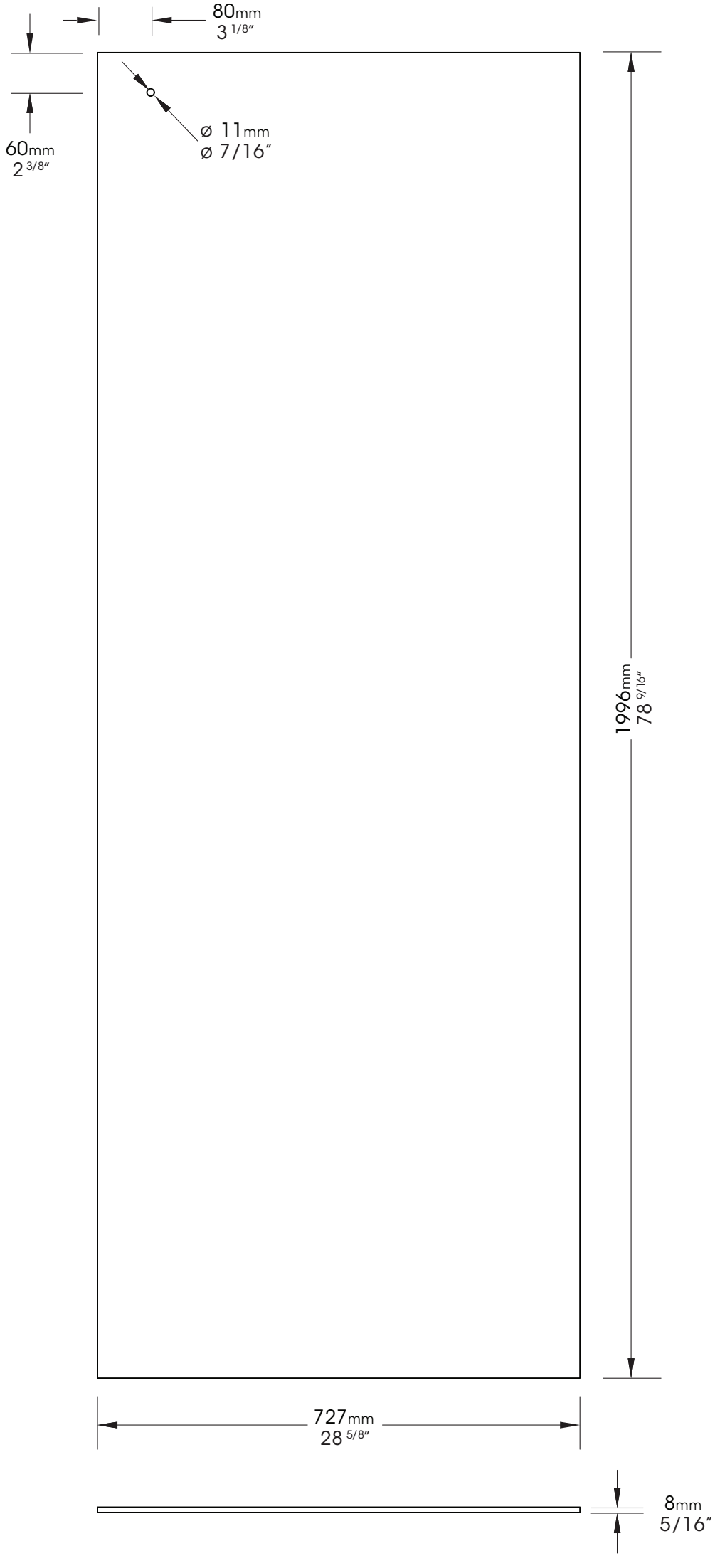
80mm
3 1/8″
60mm
2 3/8″
ø 11mm
ø 7/16″
1996mm
78 9/16″
727mm
28 5/8″
8mm
5/16″

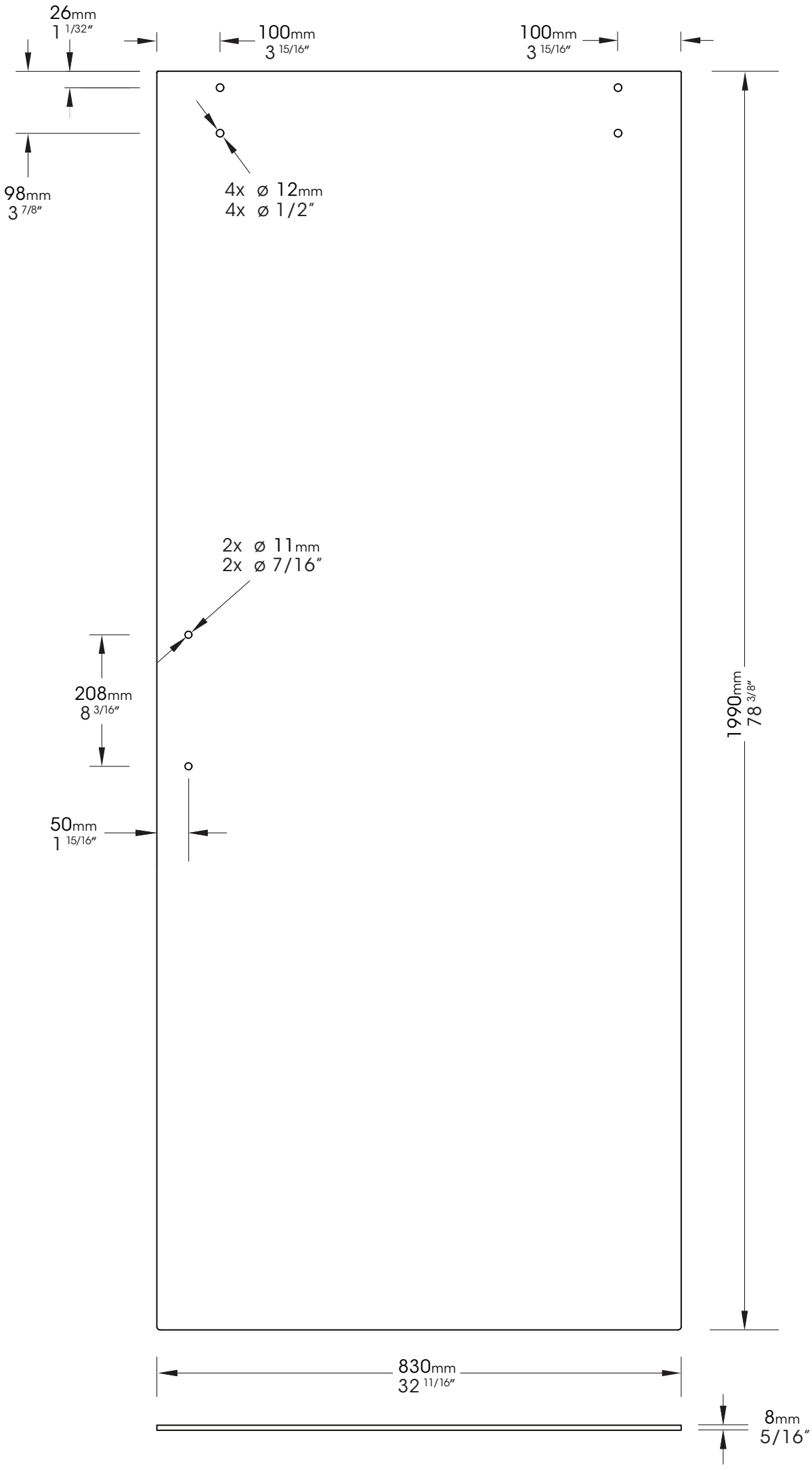
26mm
1 1/32″
100mm
3 15/16″
100mm
3 15/16″
98mm
3 7/8″
4x ø 12mm
4x ø 1/2″
2x ø 11mm
2x ø 7/16″
208mm
8 3/16″
50mm
1 15/16″
1990mm
78 3/8″
830mm
32 11/16″
8mm
5/16″