INSTALLATION
Product Manual

Version: 520201US-01-26A-AA

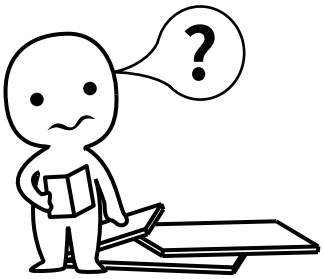

IMPORTANT INFORMATION!

please read the entire manual before starting to assemble and/or using this product.follow the manual thoroughly and keep it for further reference.

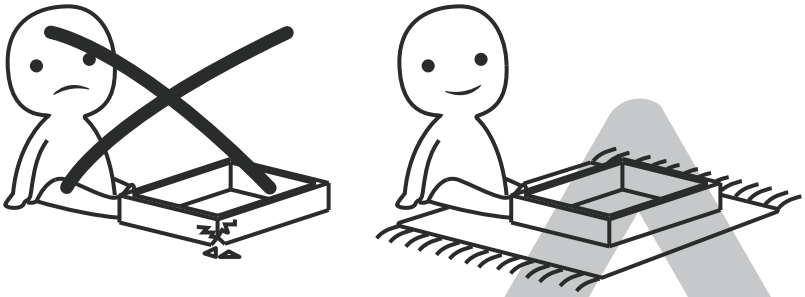

AVOID SCRATCHES!

In order to avoid scratching this furnuture should be assembled on a soft layer-could be a rug.

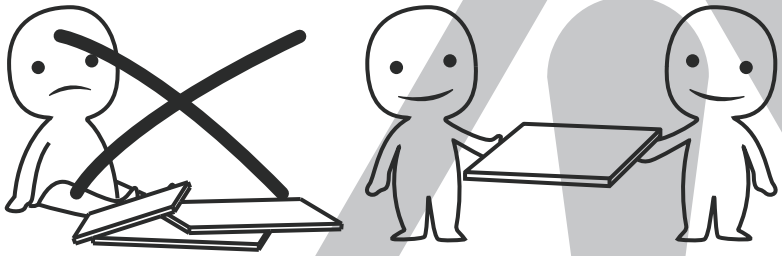

IMPROVE EFFICIENCY !

Try to find a partner to install with you, which can speed up the installation efficiency and shorten the time.

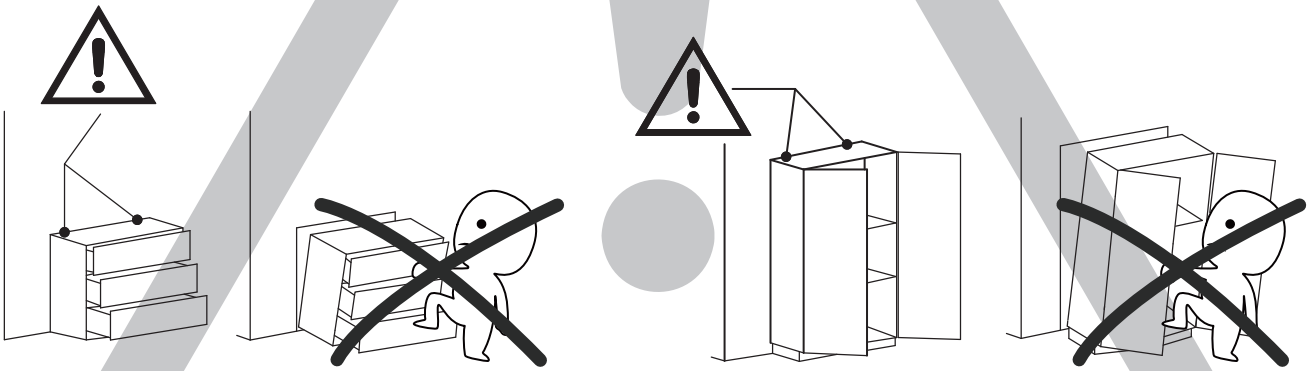

ANTI-TOPPLE WARNING !

Overturned furniture can cause serious or fatal crush injuries. To prevent tipping over, be sure to use the wall attachment, if not included with this product. Please purchase the wall attachment that fit your wall. If unsure, seek professional advice. Please read and follow each step of the instructions carefully.

IMPORTANT !

It is important that any product which is assembled using any kind of screw is re-tightened 2 weeks after assembly,and once every 3 months - in order to assure stability through-out the lifespan of the product.

For regular maintenance and cleaning of the product, for the frame, please use a rag dipped in neutral detergent to fully wipe it, and then dry it with a clean rag.For glass materials, wipe with a rag dampened with water glass cleaner, and then dry with a dry rag.

Do not use an electric screwdriver, and do not use too much force when installing, because the board is easy to break.

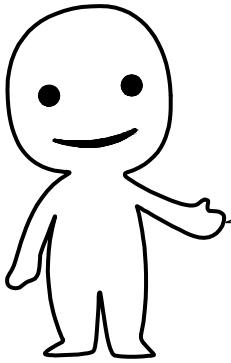

Please prepare the following tools

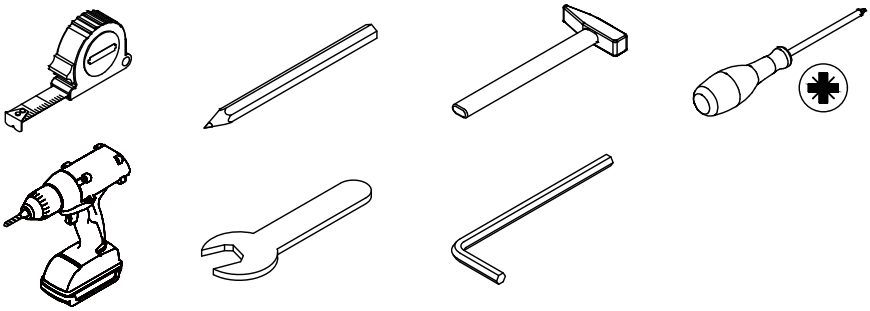



When installing, please carefully confirm whether each screw corresponds to the manual, accessories with similar shapes can be distinguished by size

A x 123	B x 123	C x 123	D x 8	E x 45
 Ø 15 x 10mm		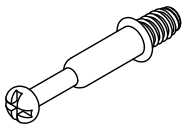 Ø 6 x 35mm		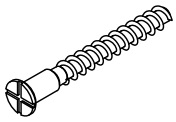 Ø 5 x 40mm
F x 120	**G x 7**	**H x 10**	**J x 4**	**K x 2**
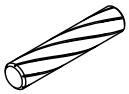 Ø 6 x 30mm	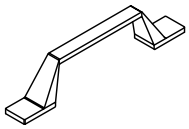	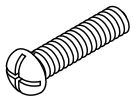 Ø4 x 18mm	 Ø 4 x 8mm	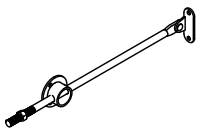
L x 1	**M x 2**	**N x 4**	**P x 2**	**Q x 4**
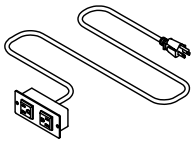		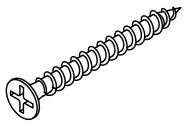 Ø 3.5 x 35mm	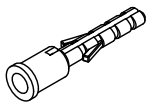	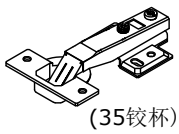 (35铰杯)
R x 32	**S x 8**	**T x 2**	**U x 30**	**V x 93**
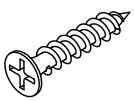 Ø 3.5 x 20mm	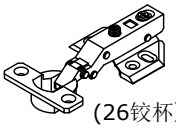 (26铰杯)	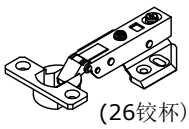 (26铰杯)	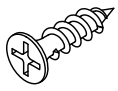 Ø 3.5 x 12mm	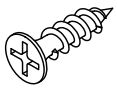 Ø 3.5 x 14mm
W x 2	**X x 4**	**Y x 36**	**Z x 8**	**AA x 5**
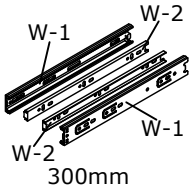 300mm	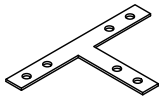		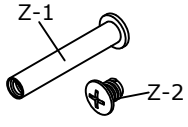	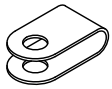

AB x 18	AC x 12	AD x 4	AE x 4	AF x 5
	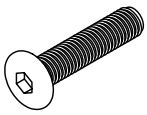	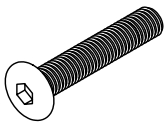		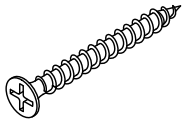
Ø 6 x 12mm	Ø 6 x 35mm	Ø 6 x 45mm	M6	Ø 4 x 40mm
AG x 1	**AH x 1**	**AK x 4**	**AL x 4**	**66 x 4**
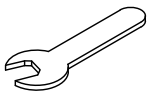	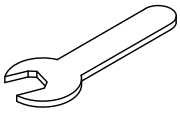	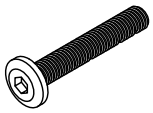		
M6	M8	Ø 6 x 40mm	M6	Ø 6 x 10mm
67 x 4	**68 x 4**	**69 x 4**	**70 x 1**	**71 x 1**
	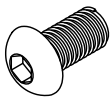		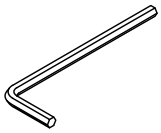	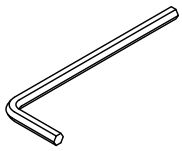
Ø 6 x 15mm	Ø 8 x 15mm	M8	M4	M5

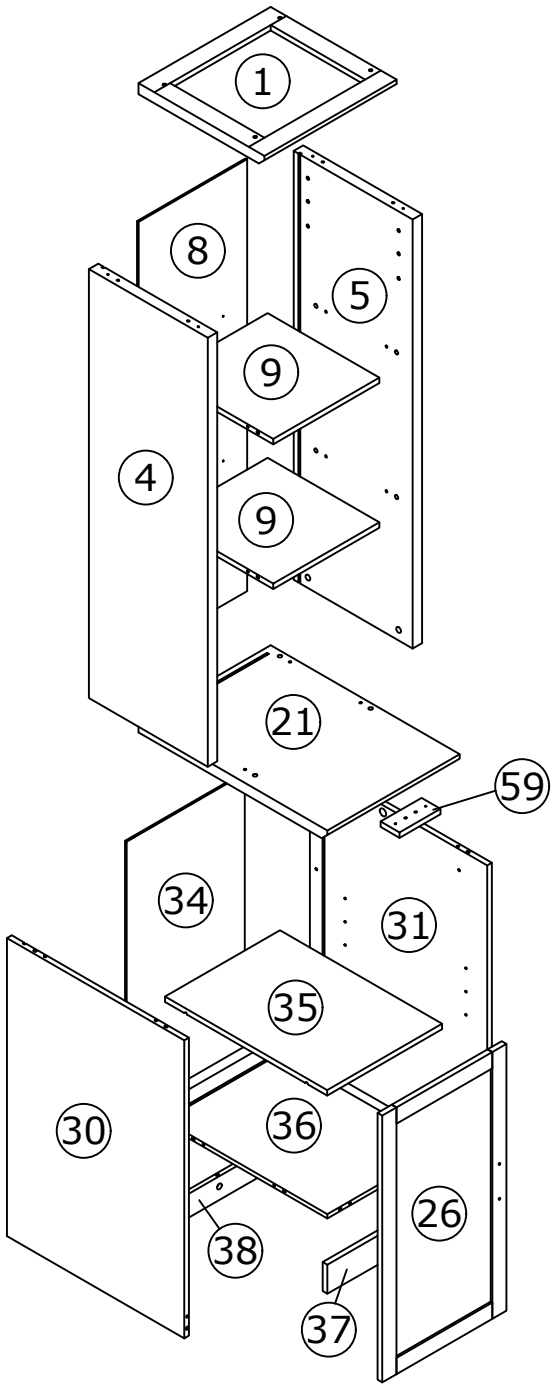

⚠WARNING

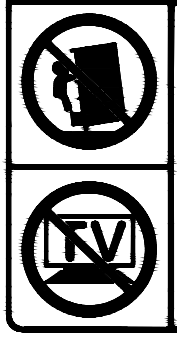

Children have died from furniture tipover To reduce the risk of furniture tipover:

- ALWAYS install Anti-tip device provided.
- NEVER put a TV on this product.
- NEVER allow children to stand,climb or hang on drawers,doors,or shelves.
- NEVER open more than one drawer at a time.
- Place heaviest items in the lowest drawers.

This is a permanent label.
Do not remove!

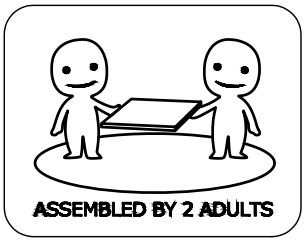

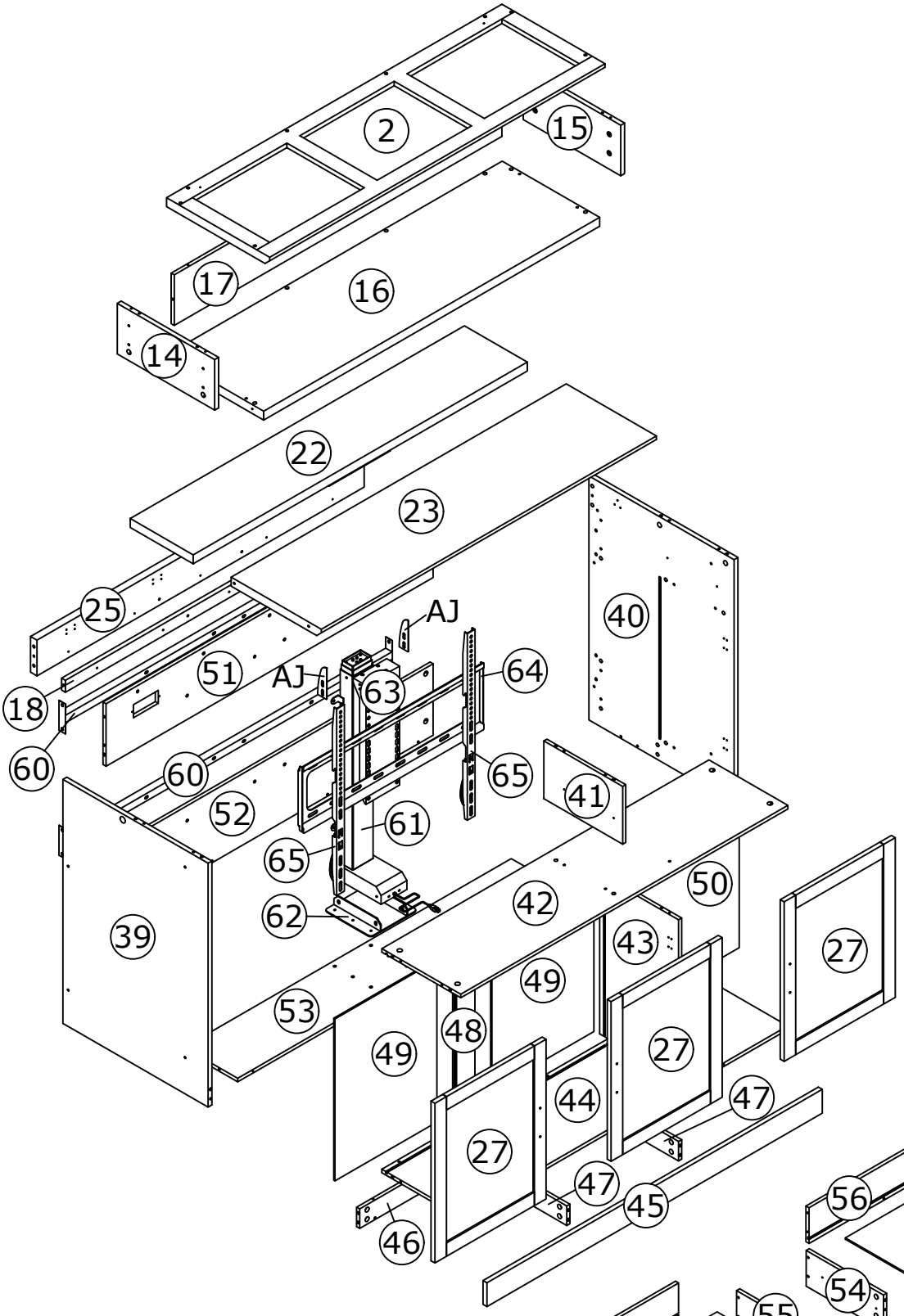

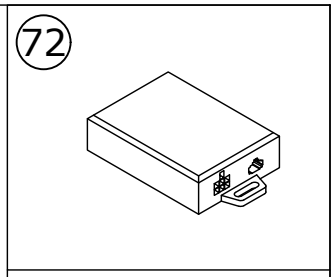

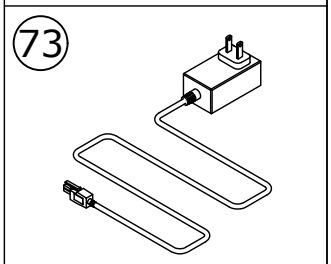

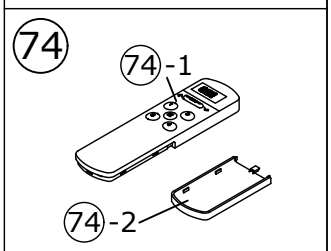

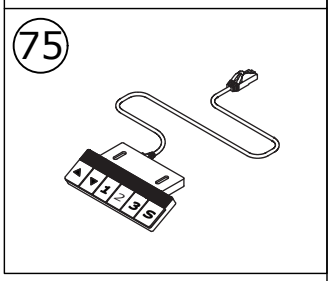

⚠WARNING





Children have died from furniture tipover To reduce the risk of furniture tipover:

- ALWAYS install Anti-tip device provided.
- NEVER put a TV on this product.
- NEVER allow children to stand,climb or hang on drawers,doors,or shelves.
- NEVER open more than one drawer at a time.
- Place heaviest items in the lowest drawers.

This is a permanent label.
Do not remove!

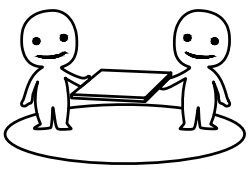

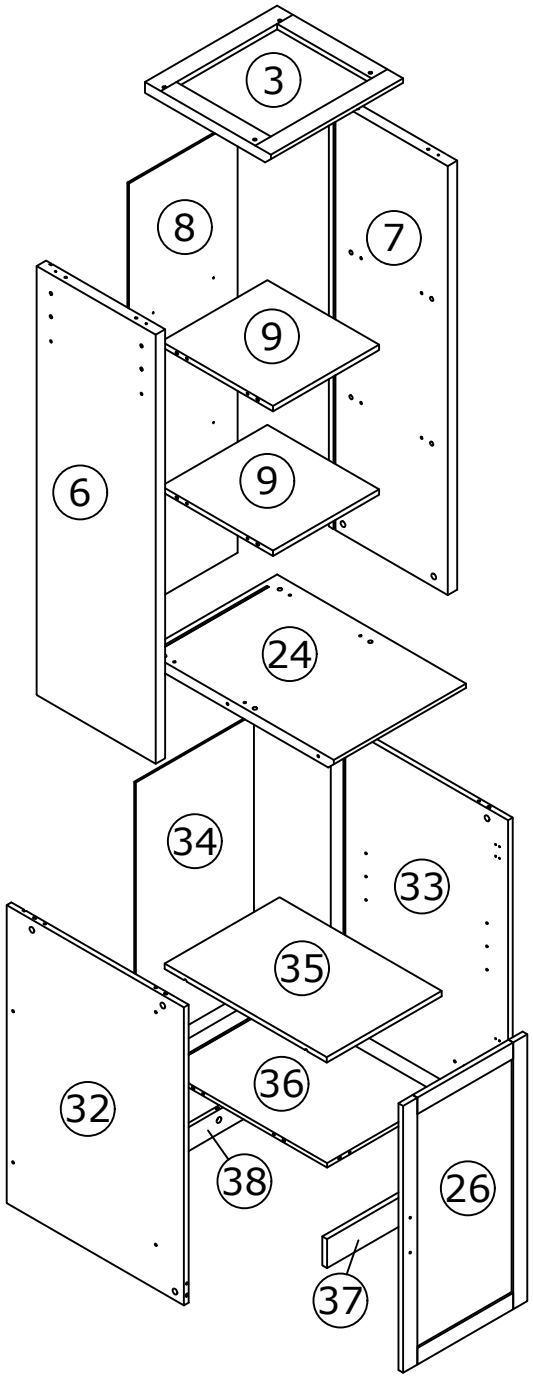

⚠WARNING

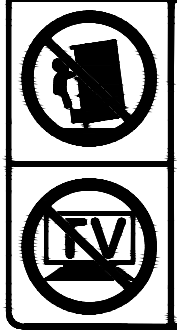

Children have died from furniture tipover To reduce the risk of furniture tipover:

- ALWAYS install Anti-tip device provided.
- NEVER put a TV on this product.
- NEVER allow children to stand,climb or hang on drawers,doors,or shelves.
- NEVER open more than one drawer at a time.
- Place heaviest items in the lowest drawers.

This is a permanent label.
Do not remove!

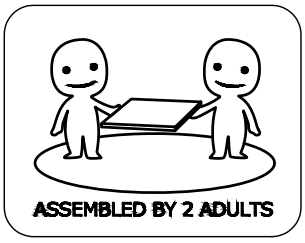

1

B x 8	C x 8	
	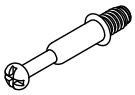 Ø 6 x 35mm	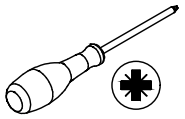

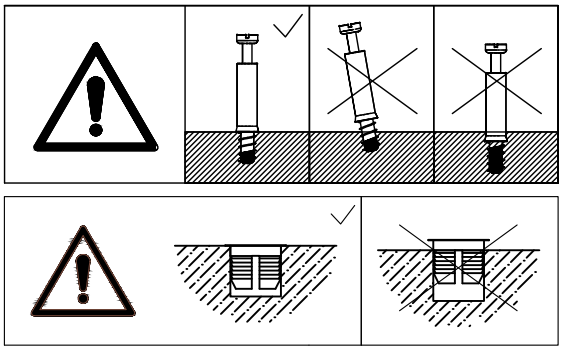

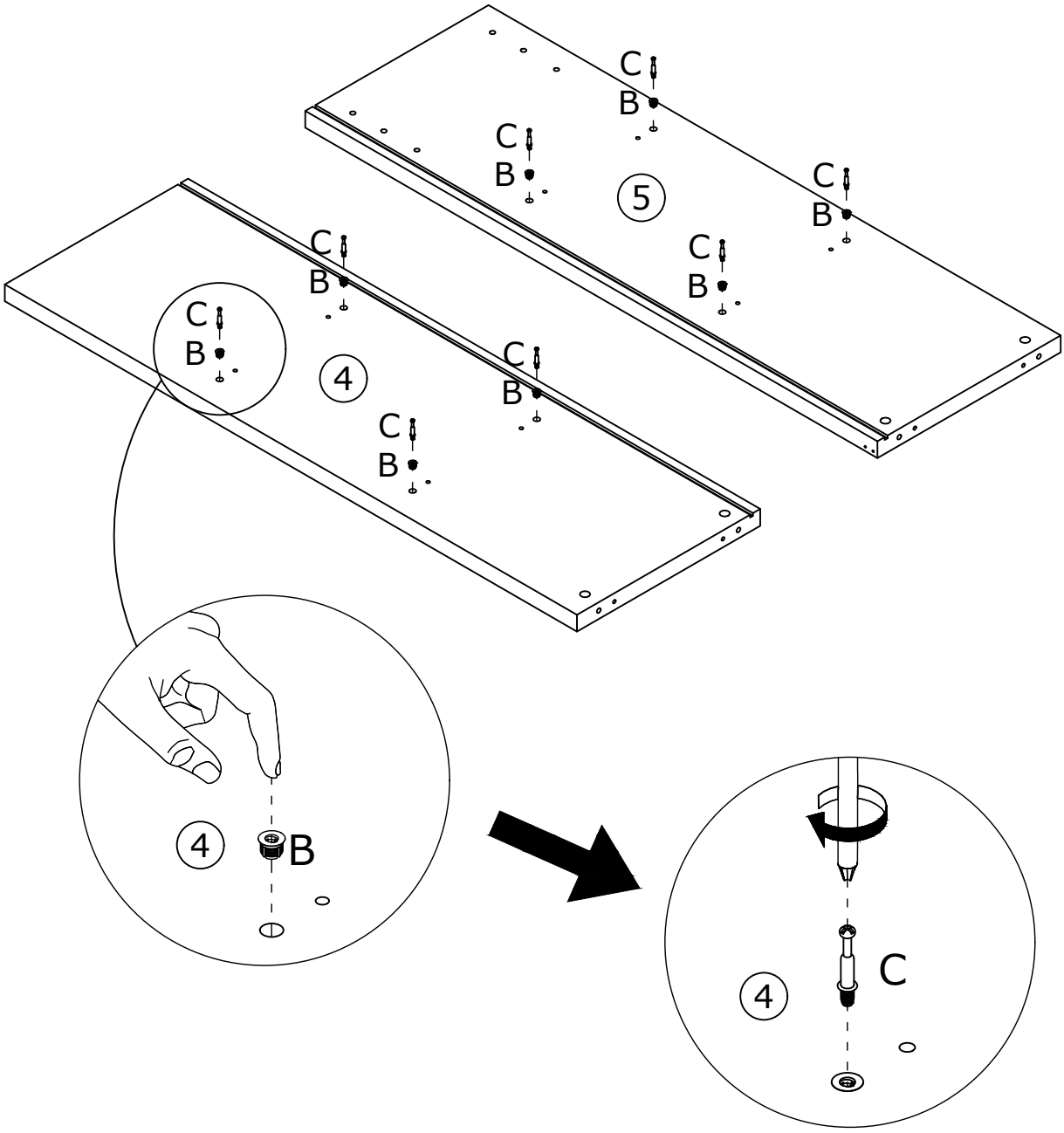

2

A x 4	F x 4	
	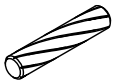	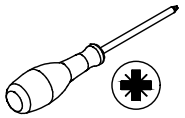
Ø 15 x 10mm	Ø 6 x 30mm	

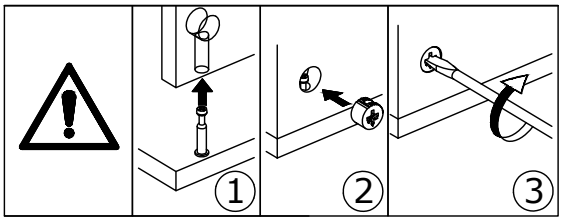

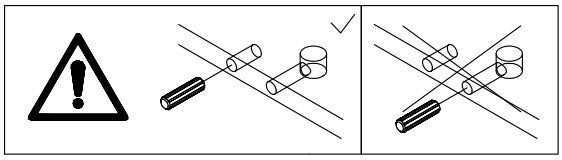

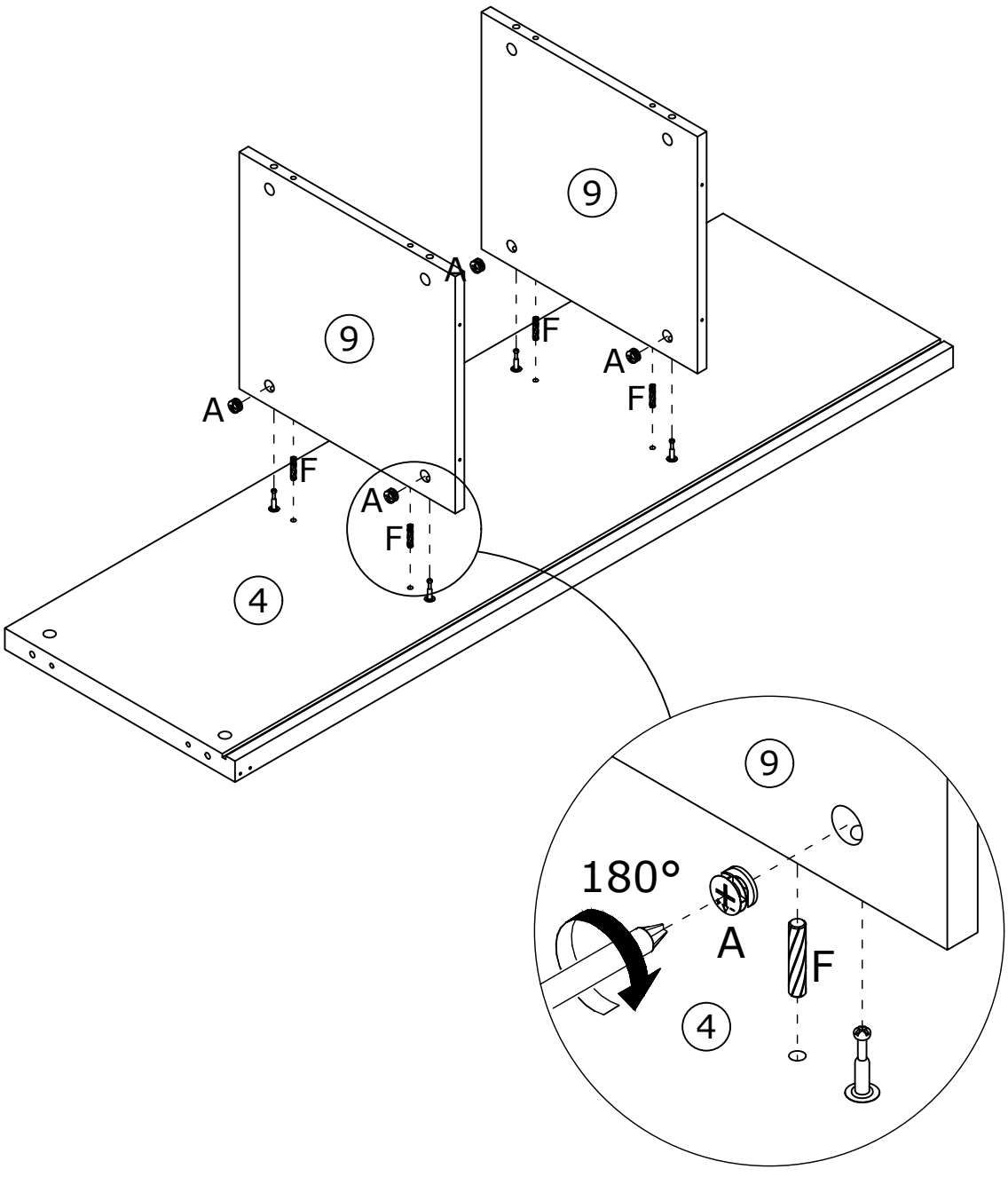

3

A x 4	F x 4	
Ø 15 x 10mm	Ø 6 x 30mm	

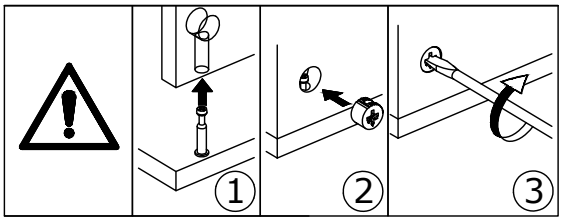

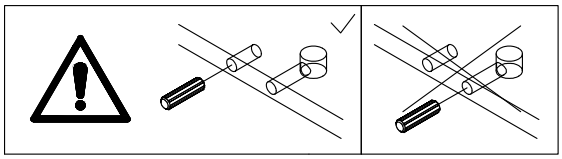

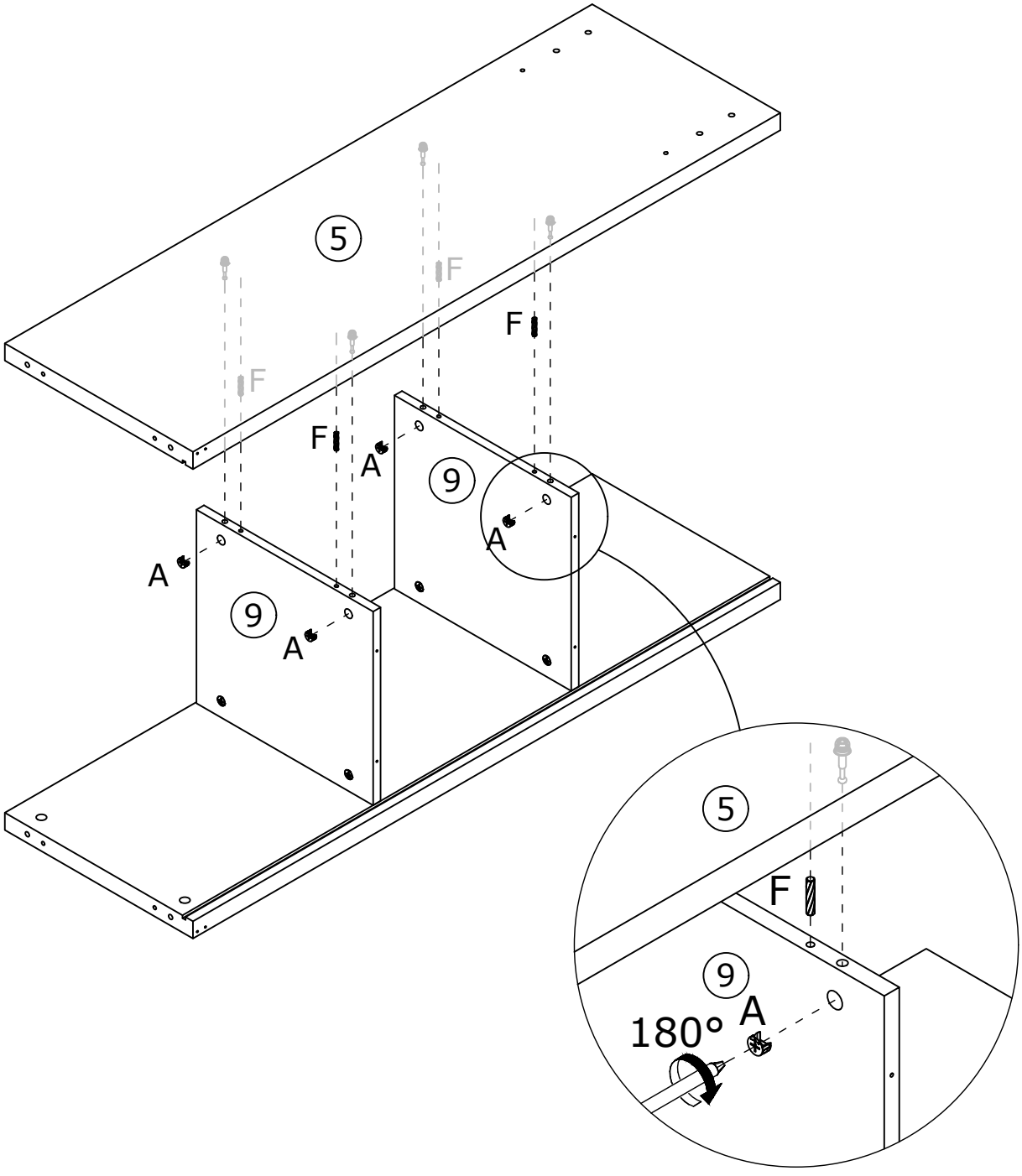

4

E x 4	F x 4	
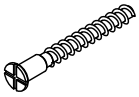 Ø 5 x 40mm	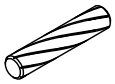 Ø 6 x 30mm	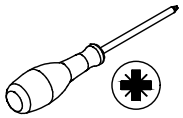

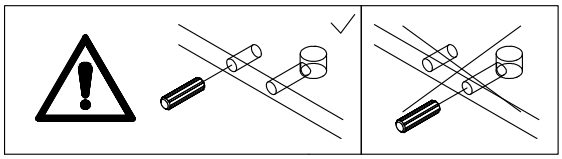

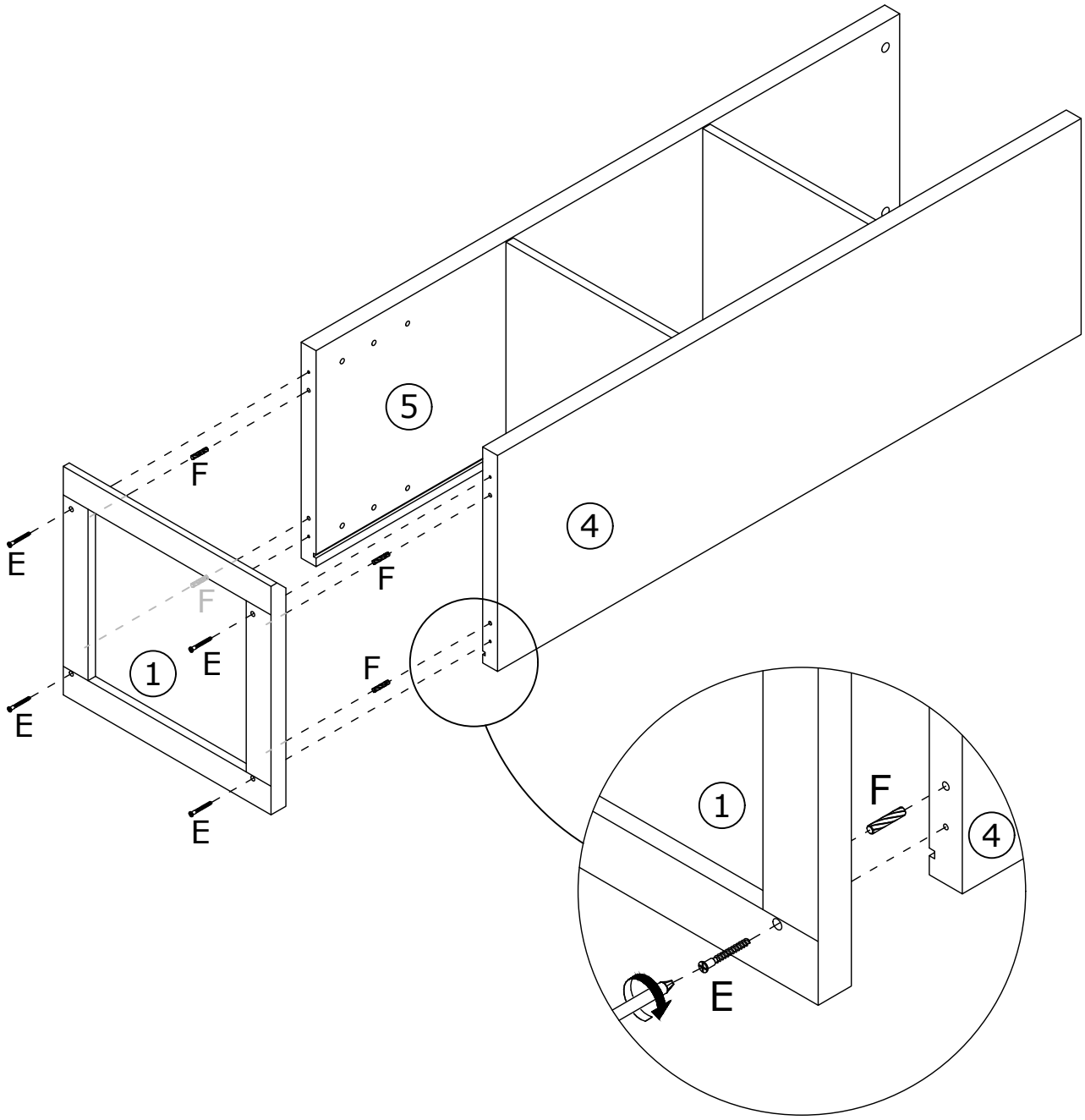

5

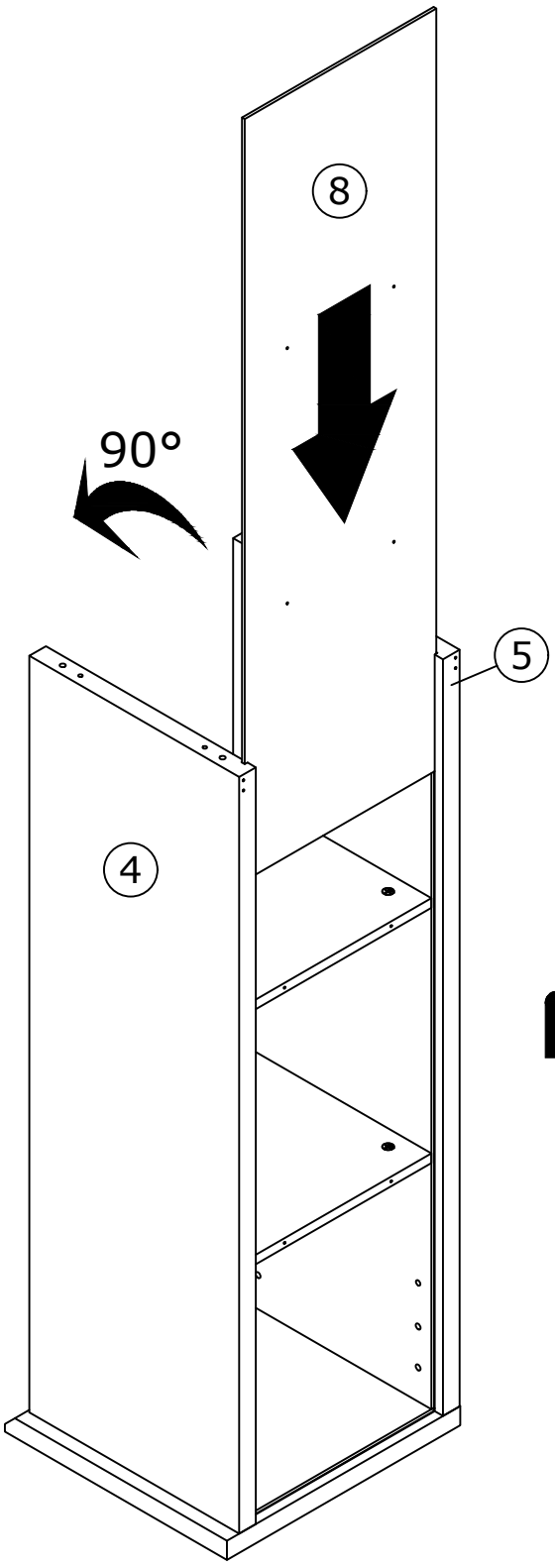

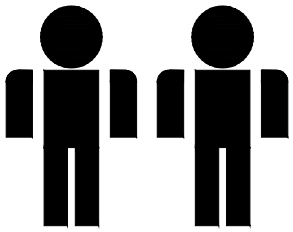

2 OF ADULTS

6

F x 2	N x 2	
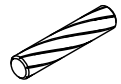 Ø 6 x 30mm	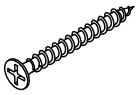 Ø 3.5 x 35mm	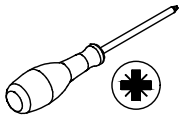

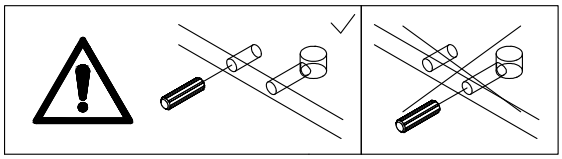

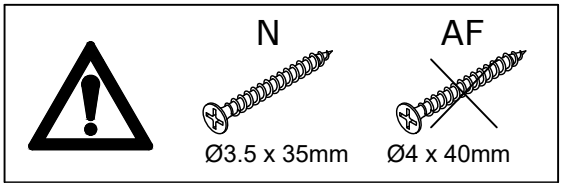

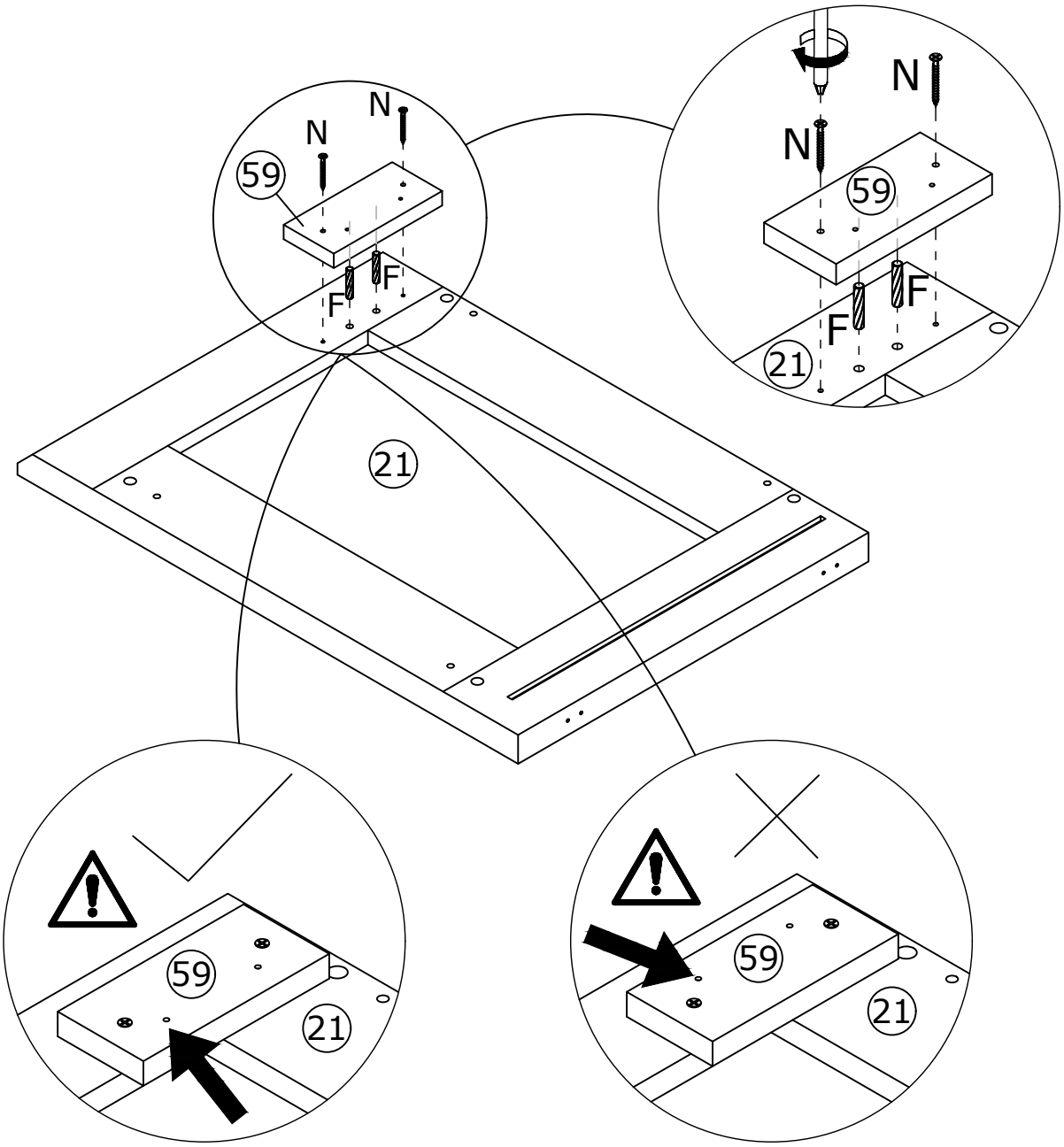

7

B x 8	C x 4	
	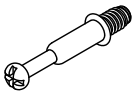 Ø 6 x 35mm	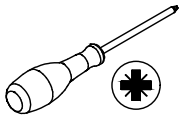

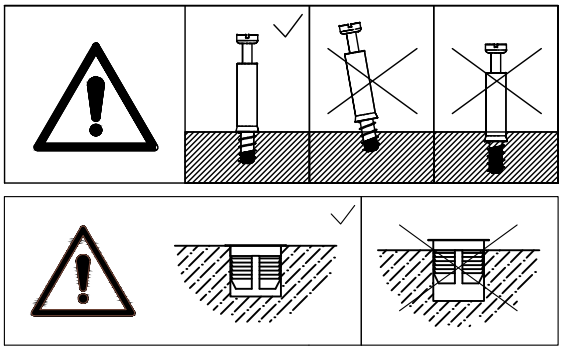

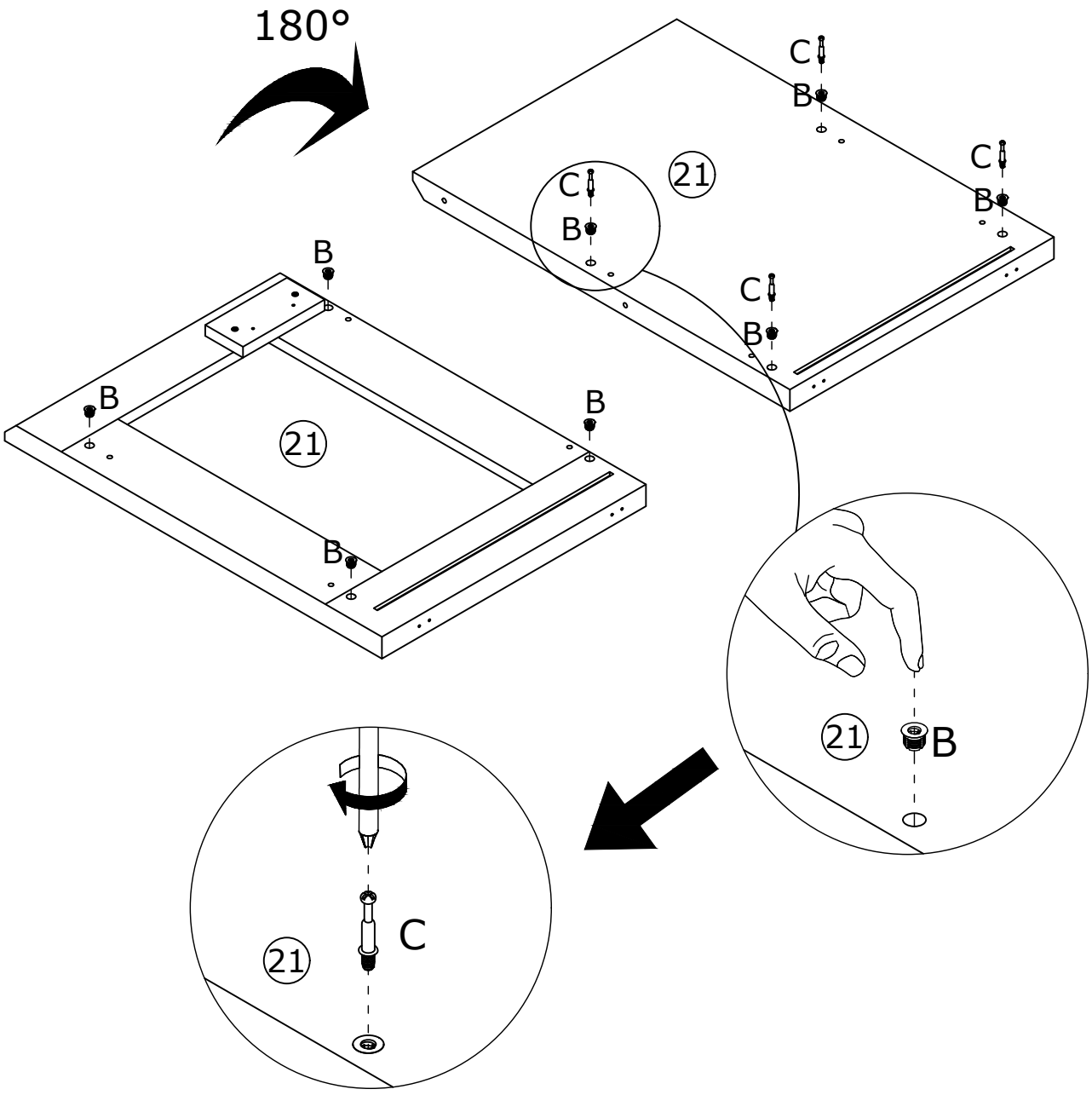

8

A x 4	F x 4	
	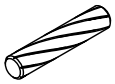	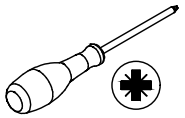
Ø 15 x 10mm	Ø 6 x 30mm	

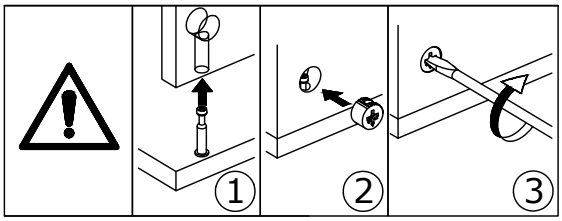

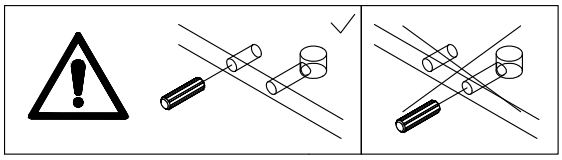

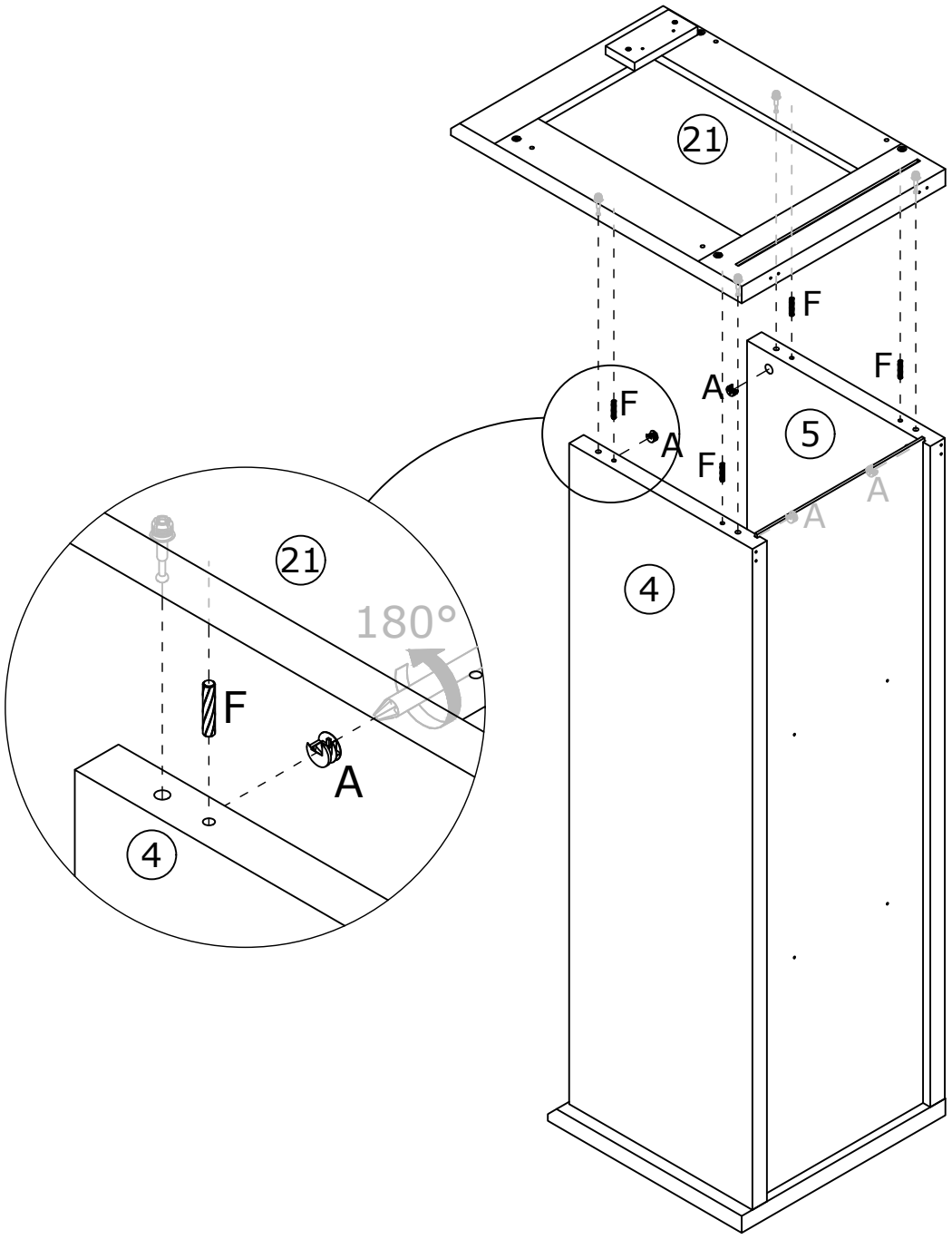

9

R x 4

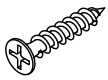

Ø 3.5 x 20mm

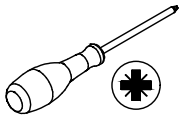

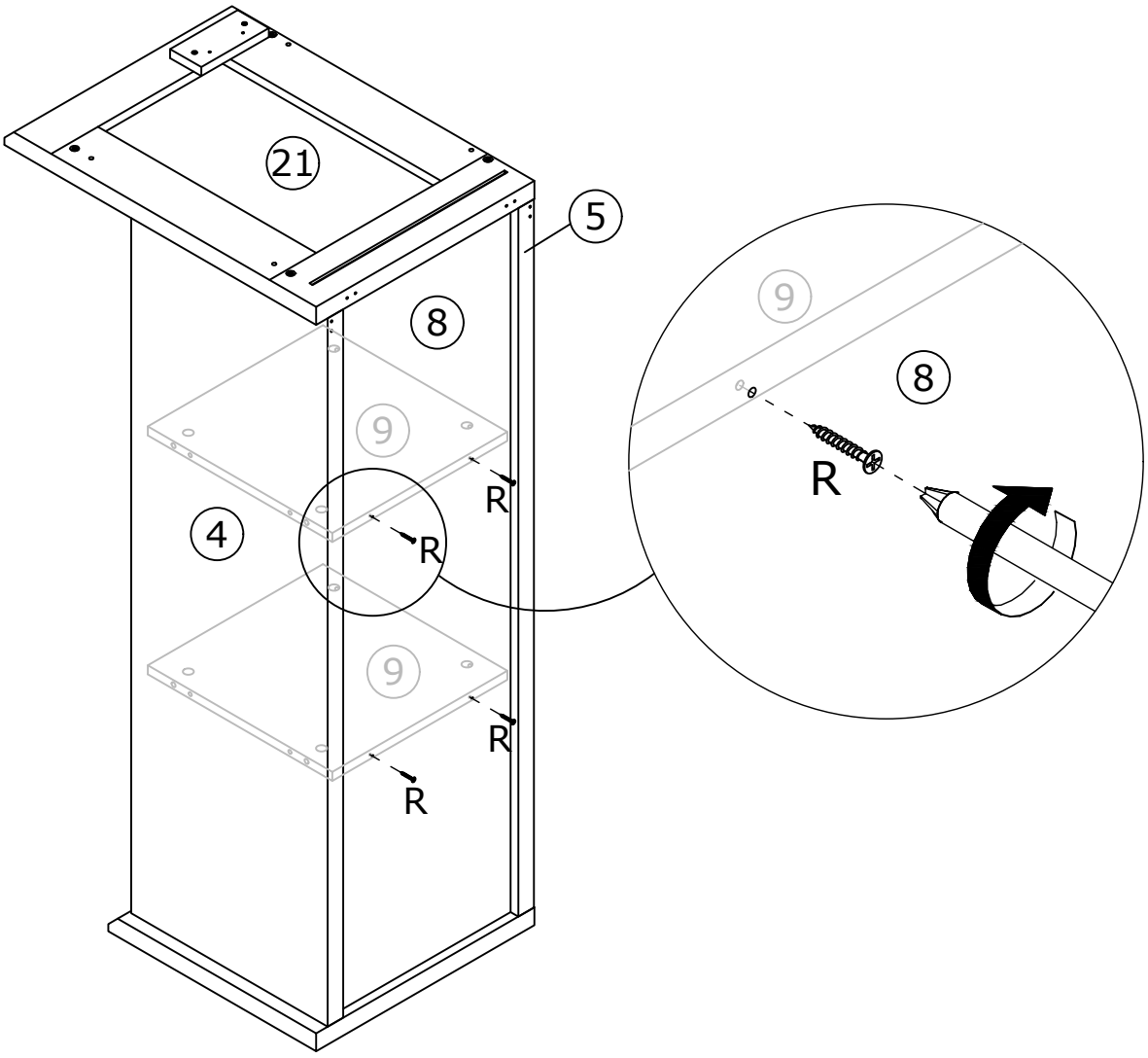

10

B x 10	C x 10	
	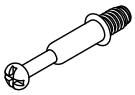 Ø 6 x 35mm	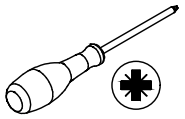

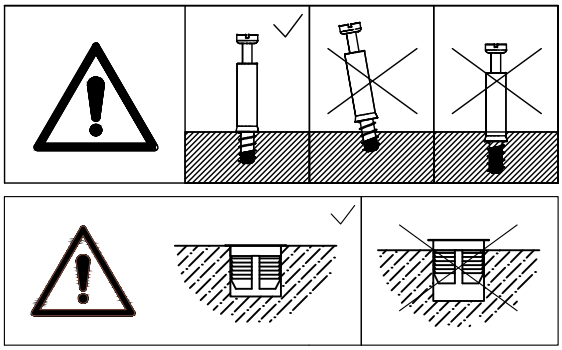

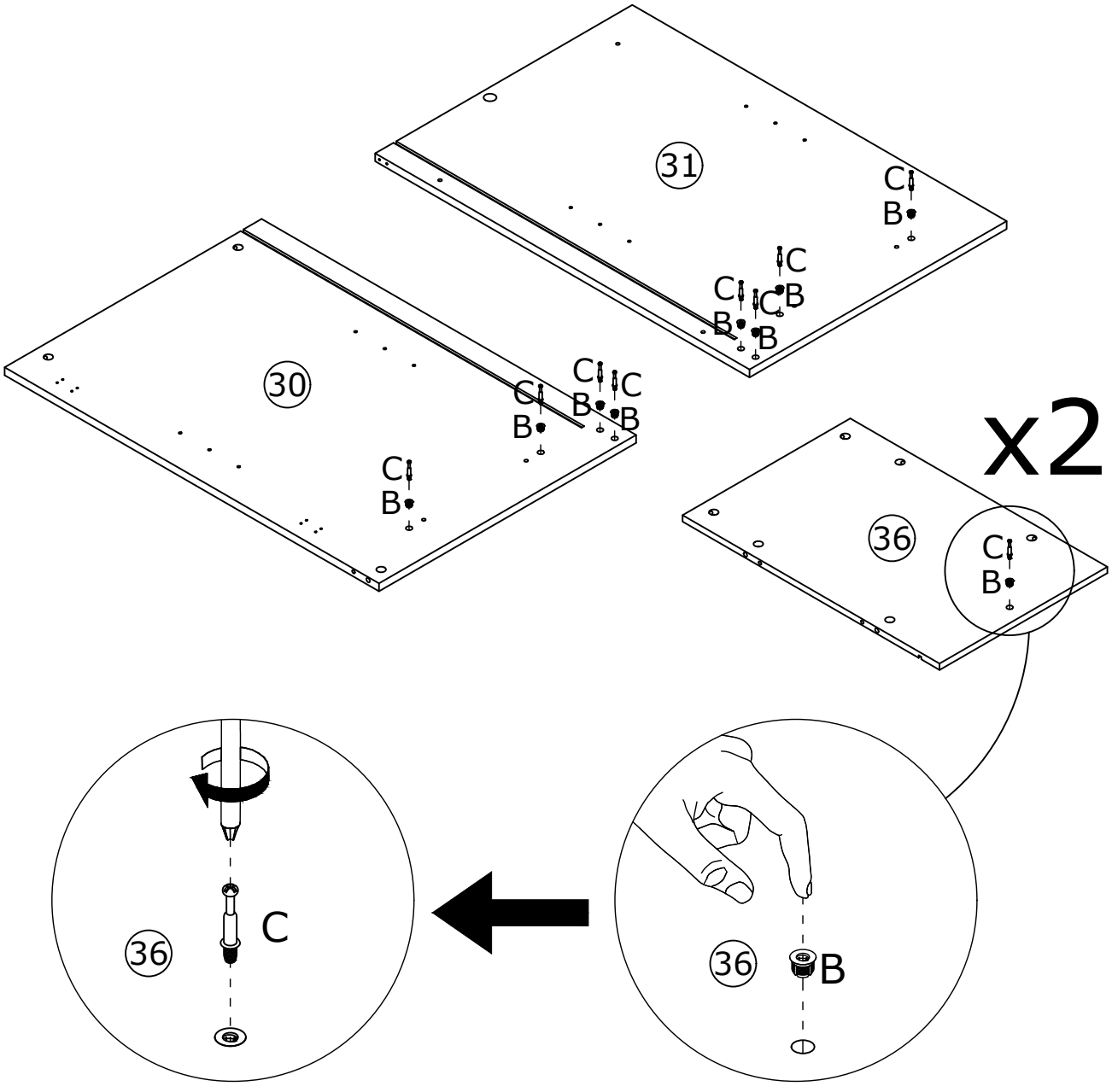

11

A x 2



Ø 15 x 10mm

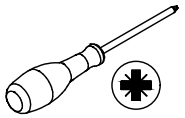

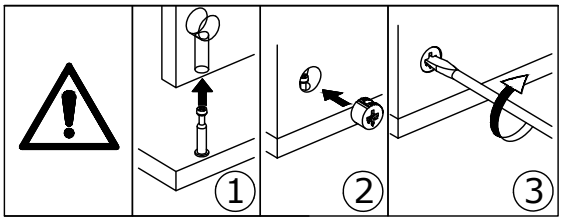

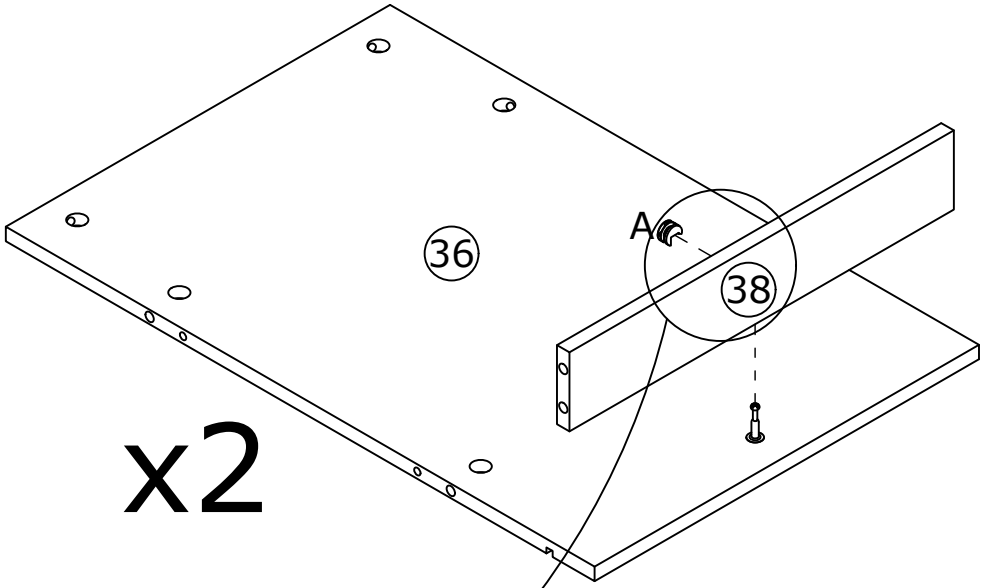

x2

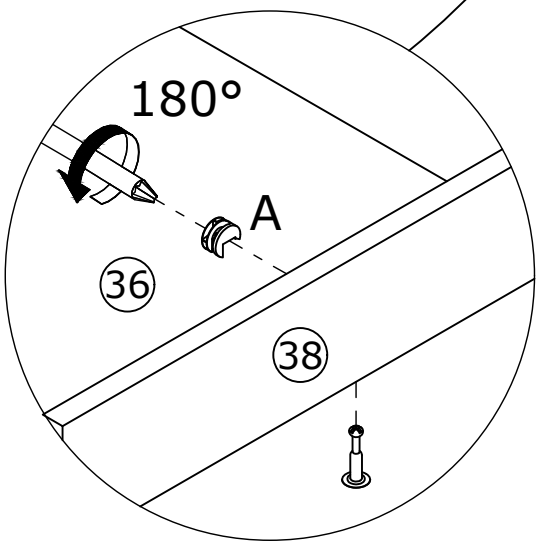

12

A x 8	F x 4	
	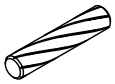	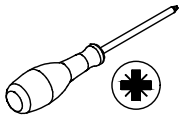
Ø 15 x 10mm	Ø 6 x 30mm	

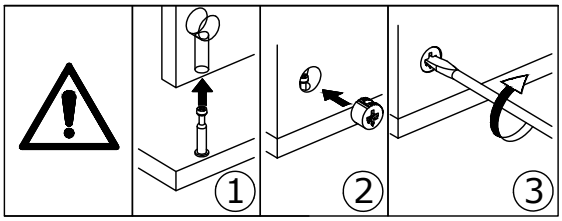

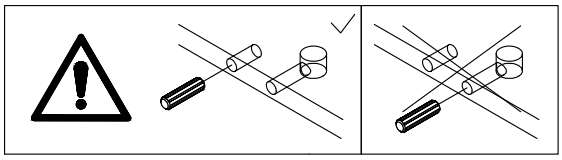

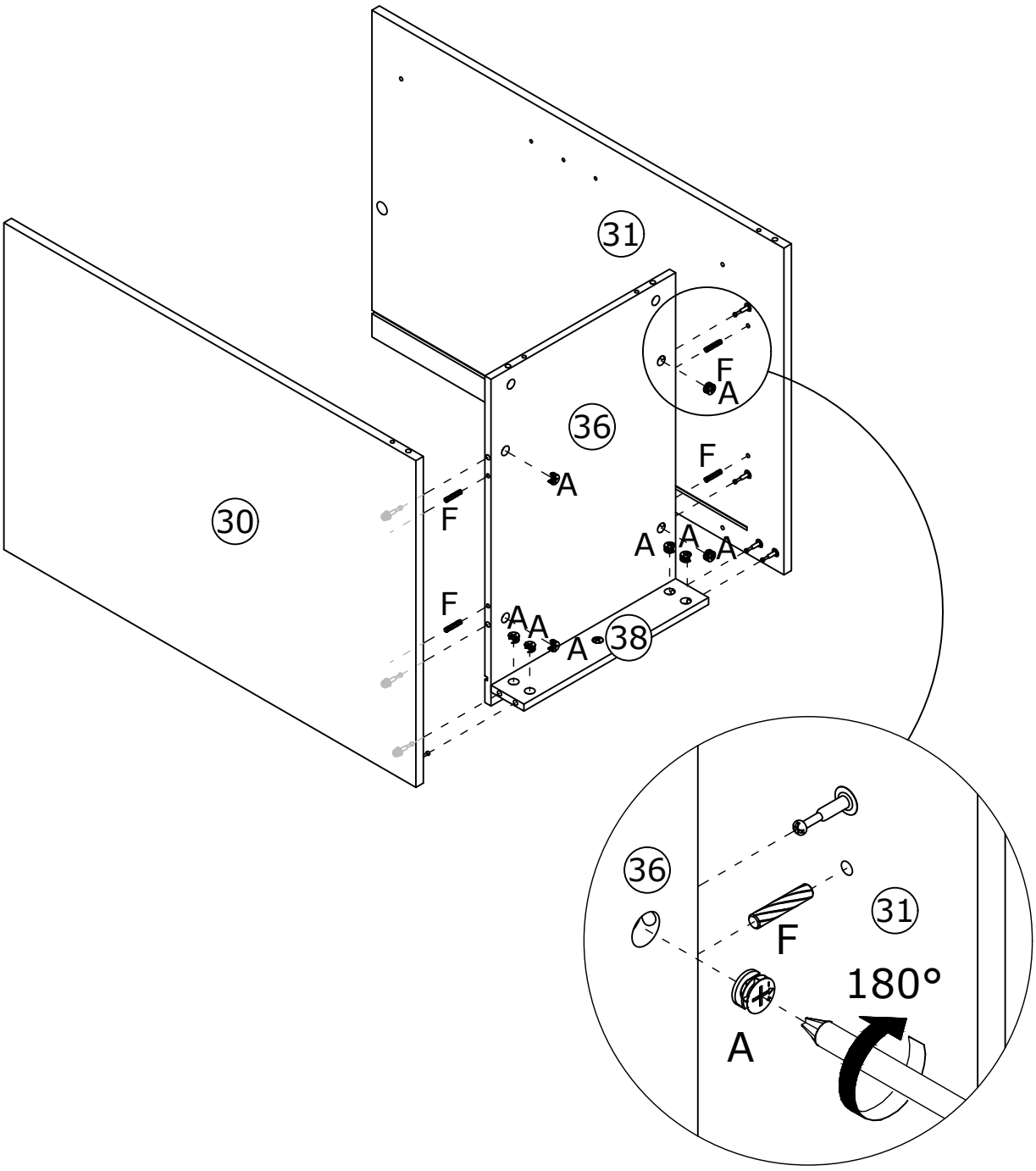

13

B x 8	C x 8	
	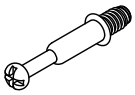 Ø 6 x 35mm	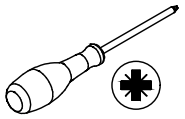

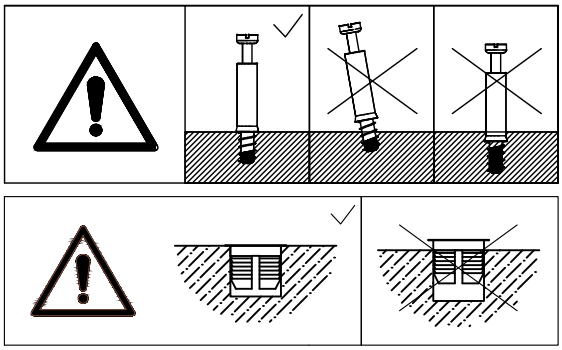

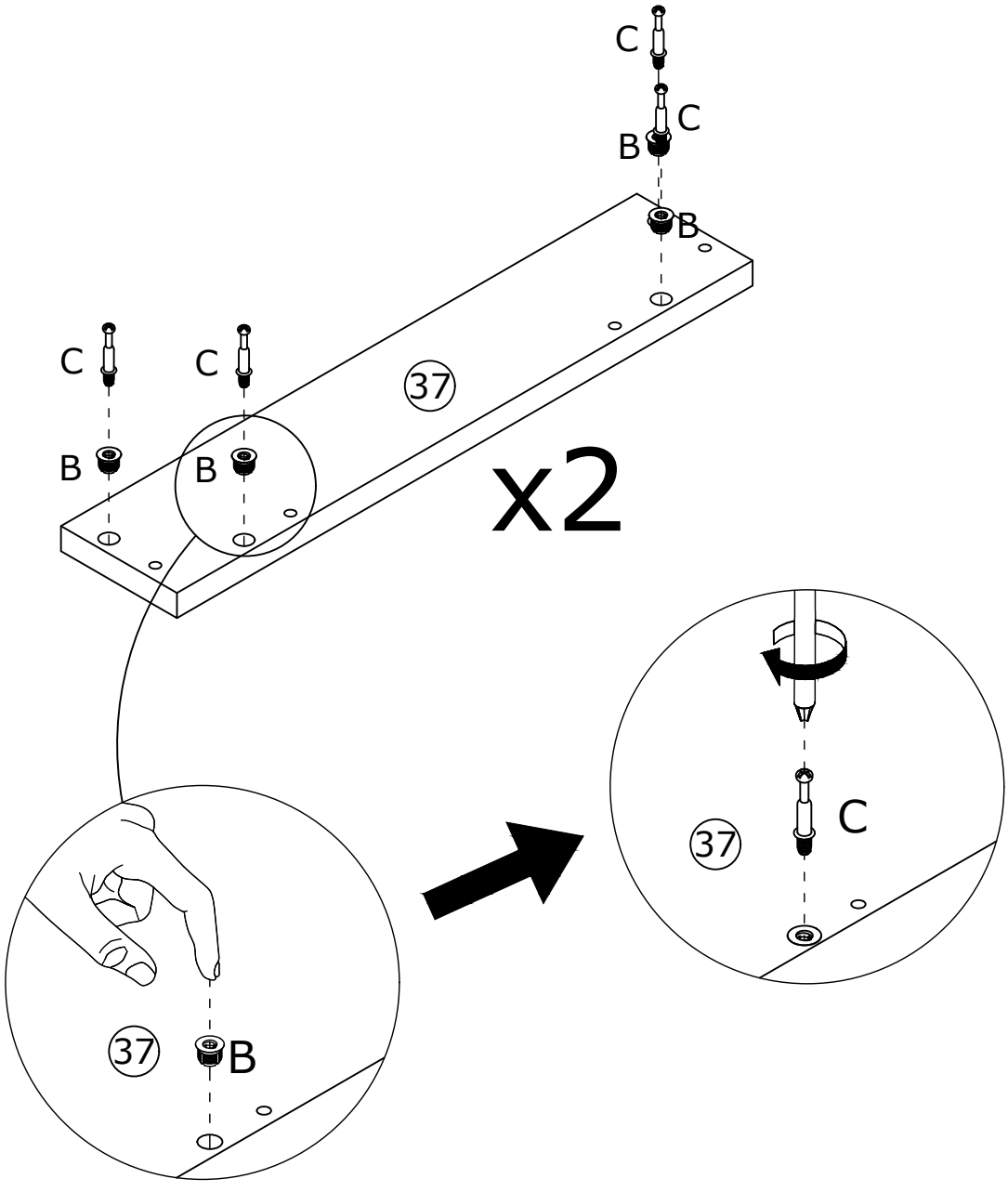

14

A x 4	F x 4	
Ø 15 x 10mm	Ø 6 x 30mm	

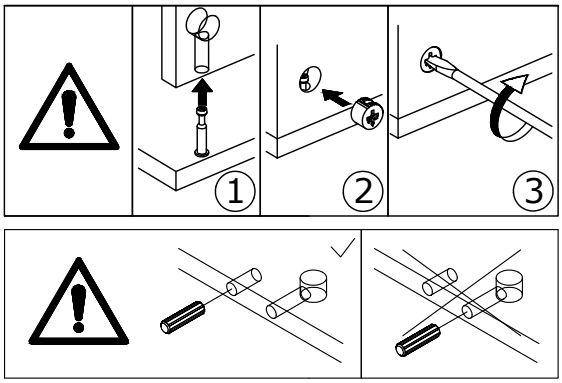

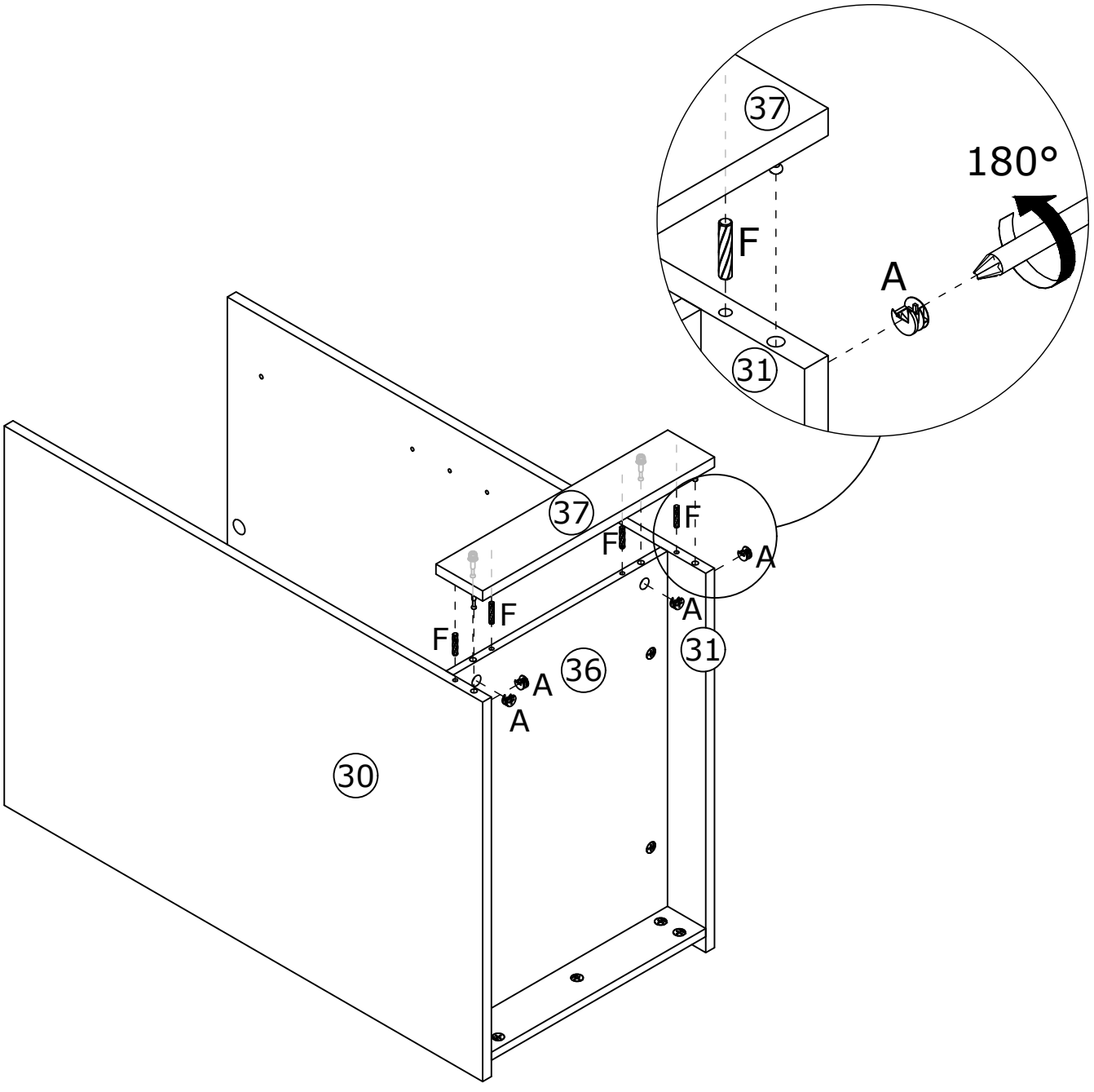

15

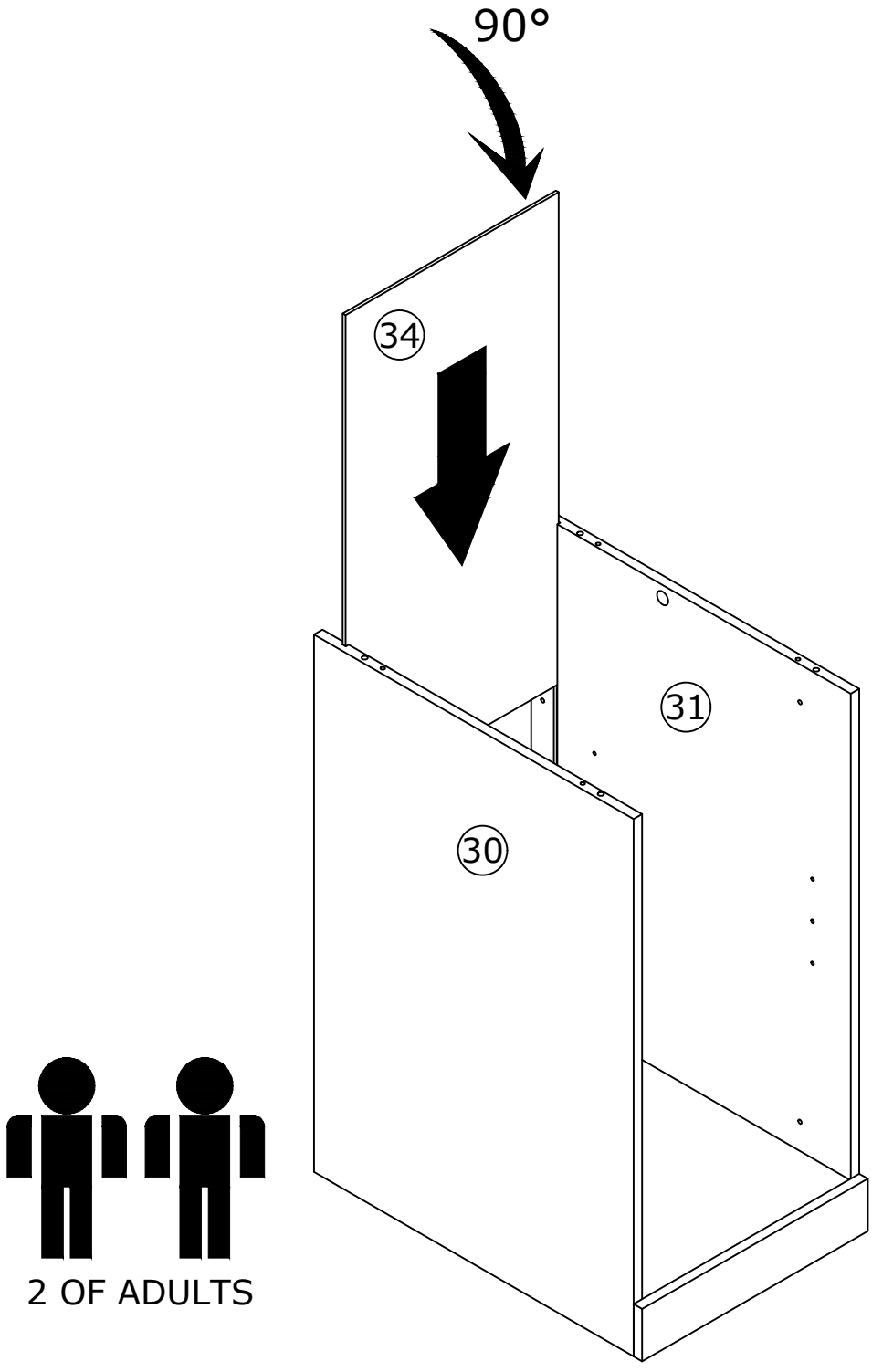

2 OF ADULTS

16

C x 4

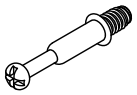

Ø 6 x 35mm

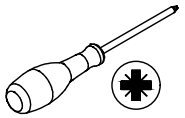

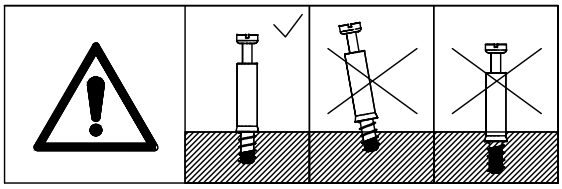

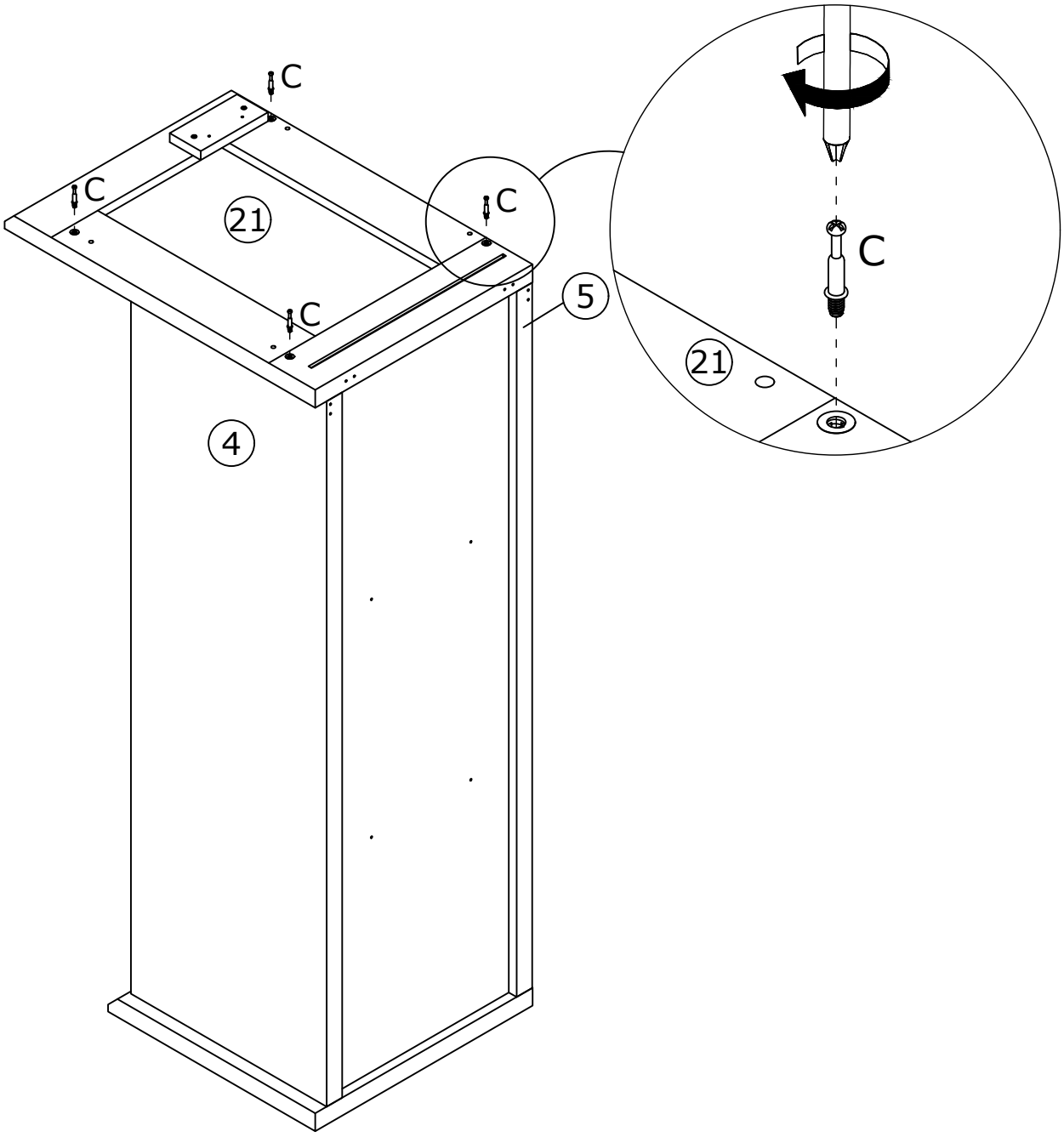

17

A x 4	F x 4	
Ø 15 x 10mm	Ø 6 x 30mm	

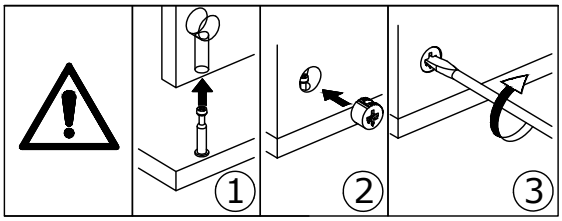

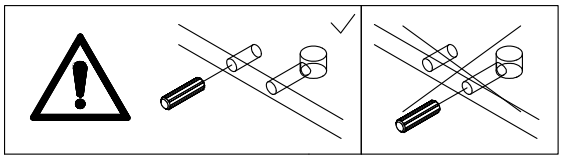

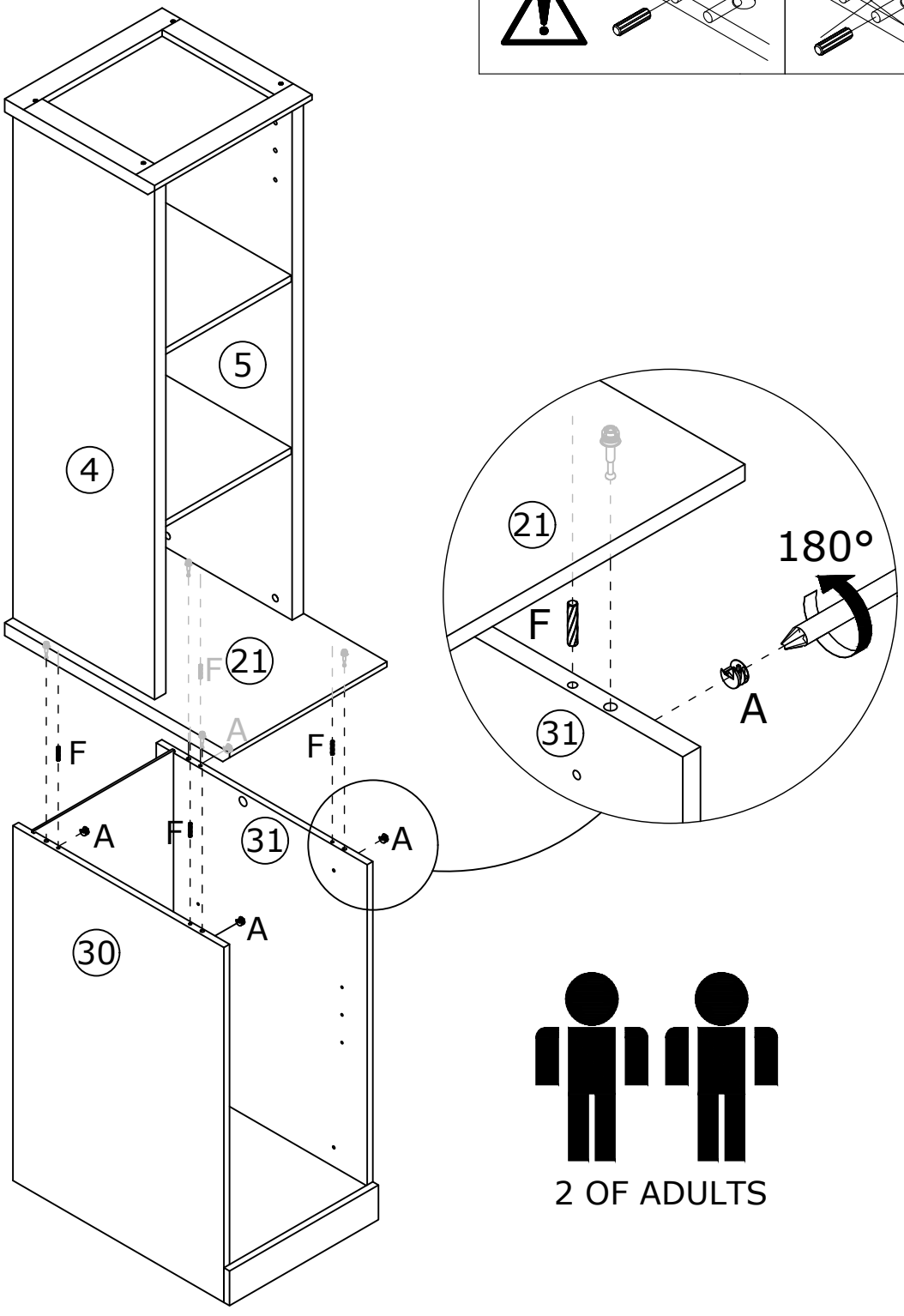

2 OF ADULTS

18

V x 12	X x 2	
 Ø 3.5 x 14mm	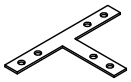	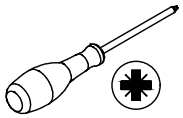



U



Ø3.5 x 12mm

V



Ø3.5 x 14mm

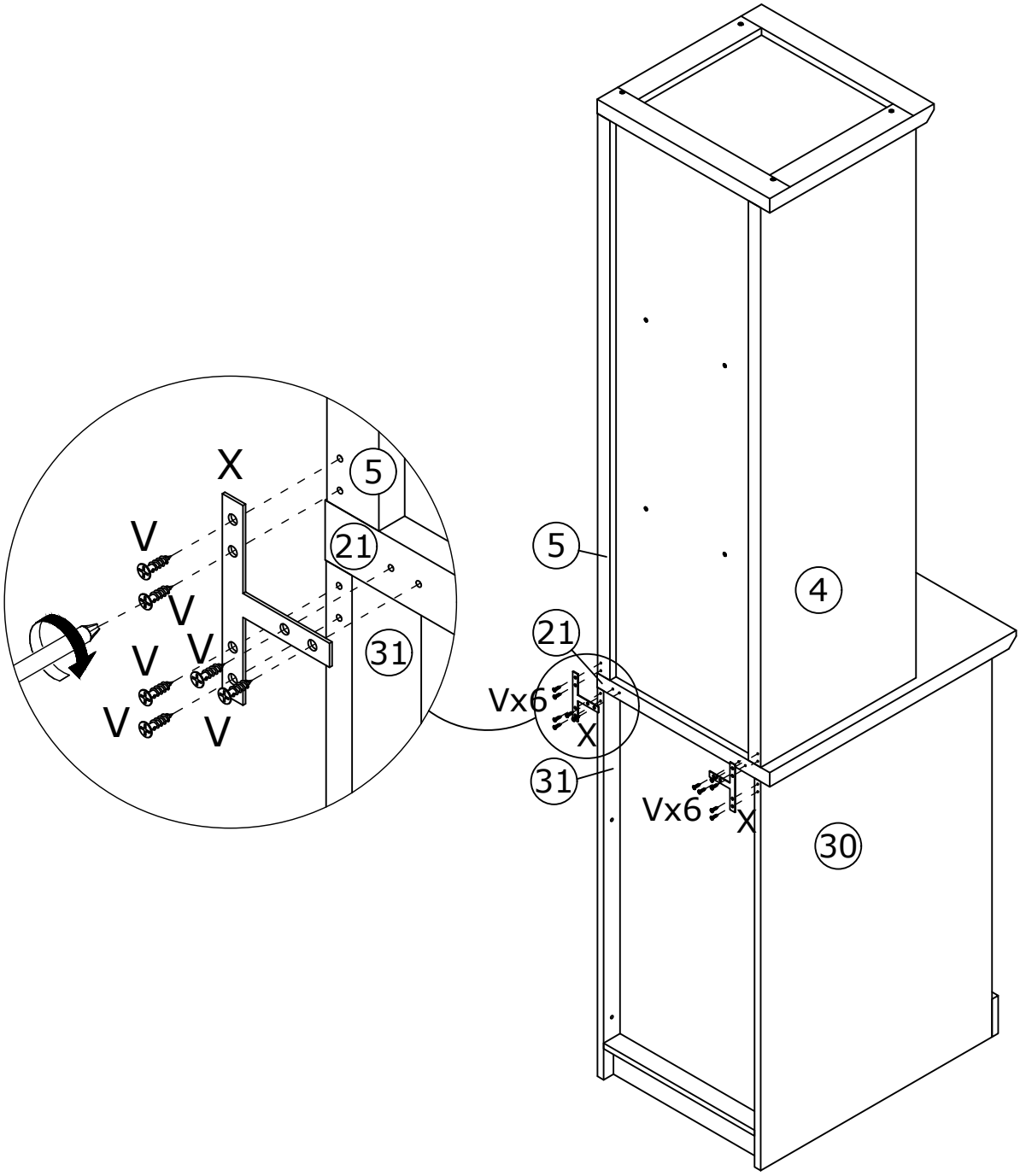

19

B x 8	C x 8	
	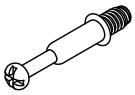 Ø 6 x 35mm	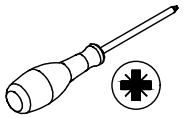

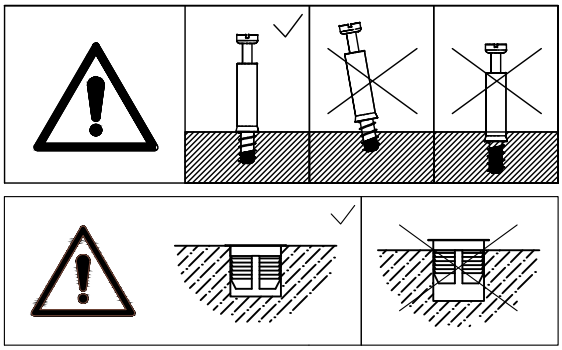

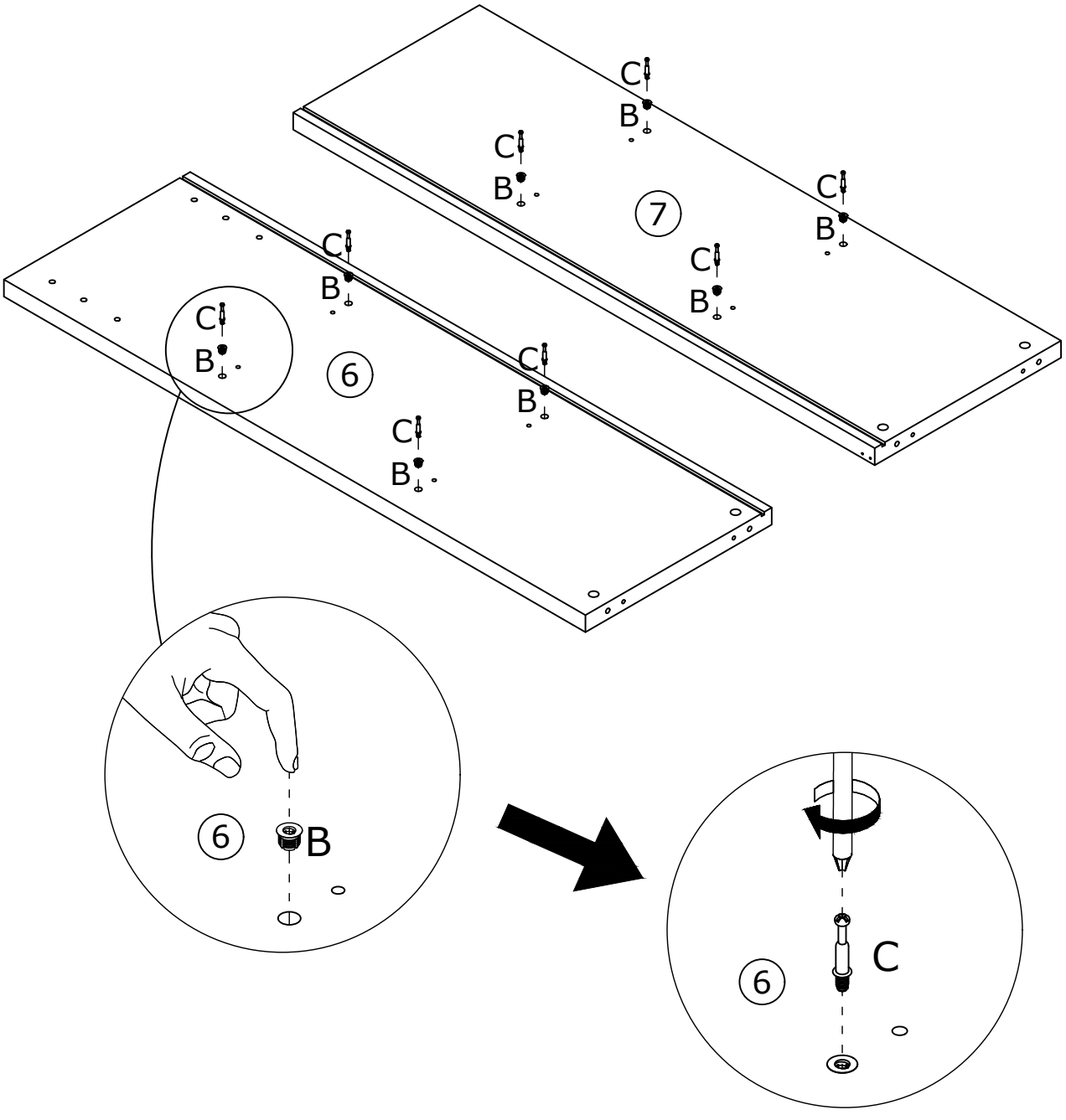

20

A x 4	F x 4	
 Ø 15 x 10mm	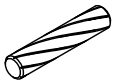 Ø 6 x 30mm	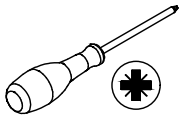

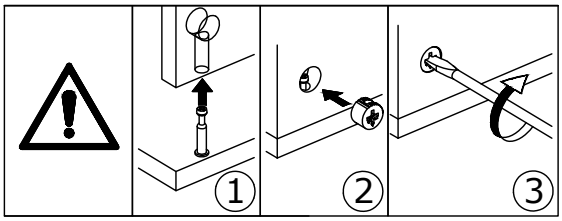

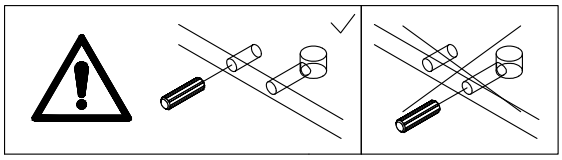

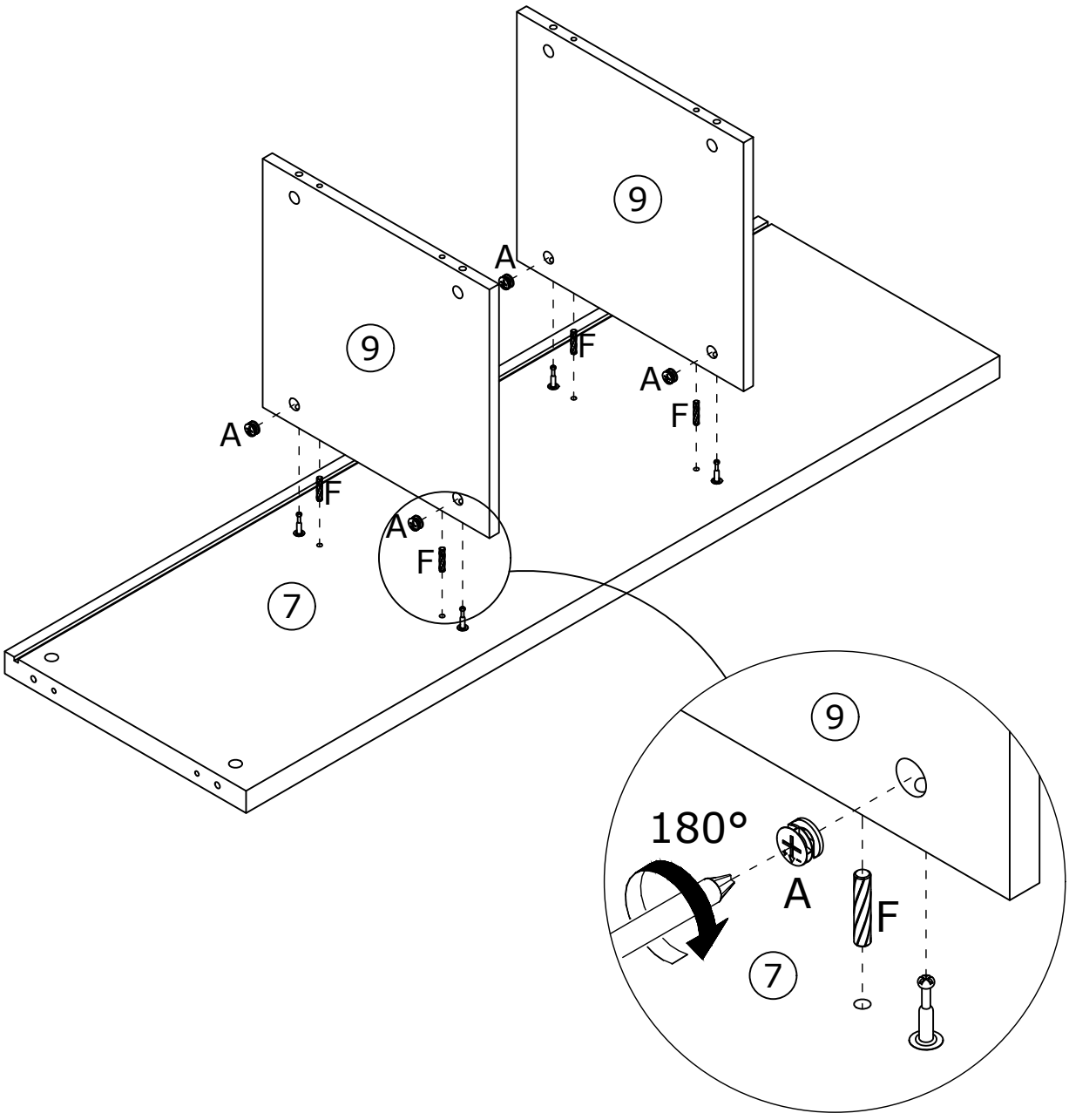

21

A x 4	F x 4	
	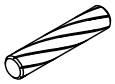	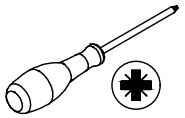
Ø 15 x 10mm	Ø 6 x 30mm	

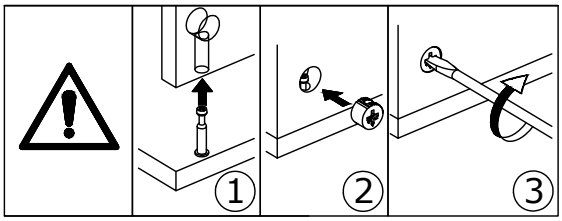

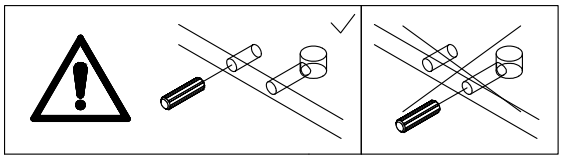

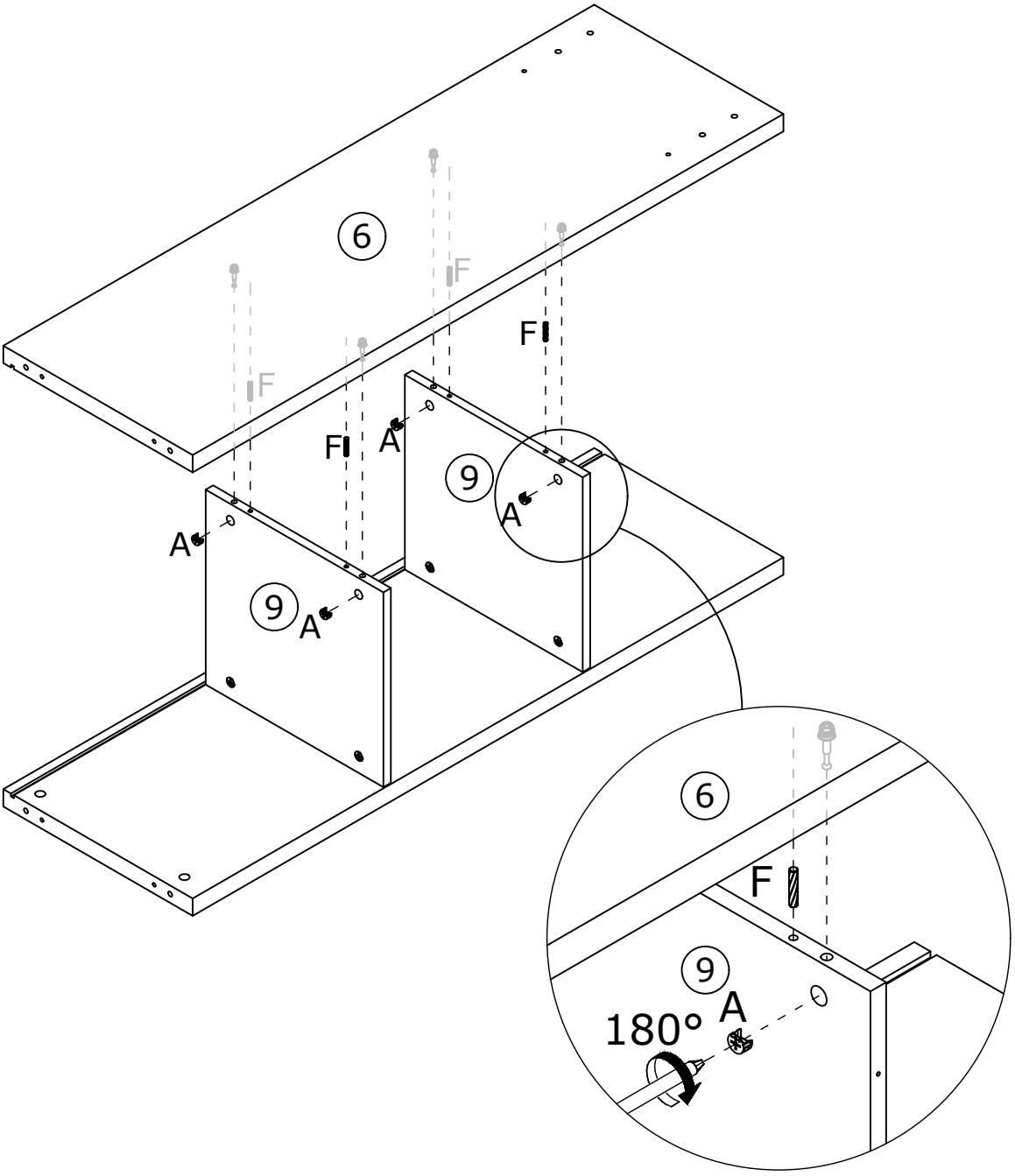

22

E x 4	F x 4	
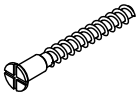 Ø 5 x 40mm	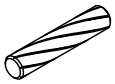 Ø 6 x 30mm	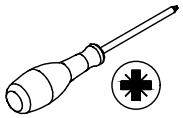

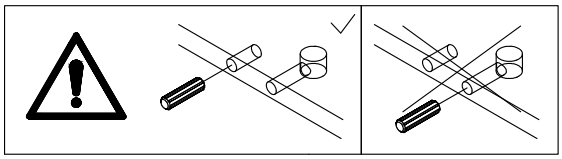

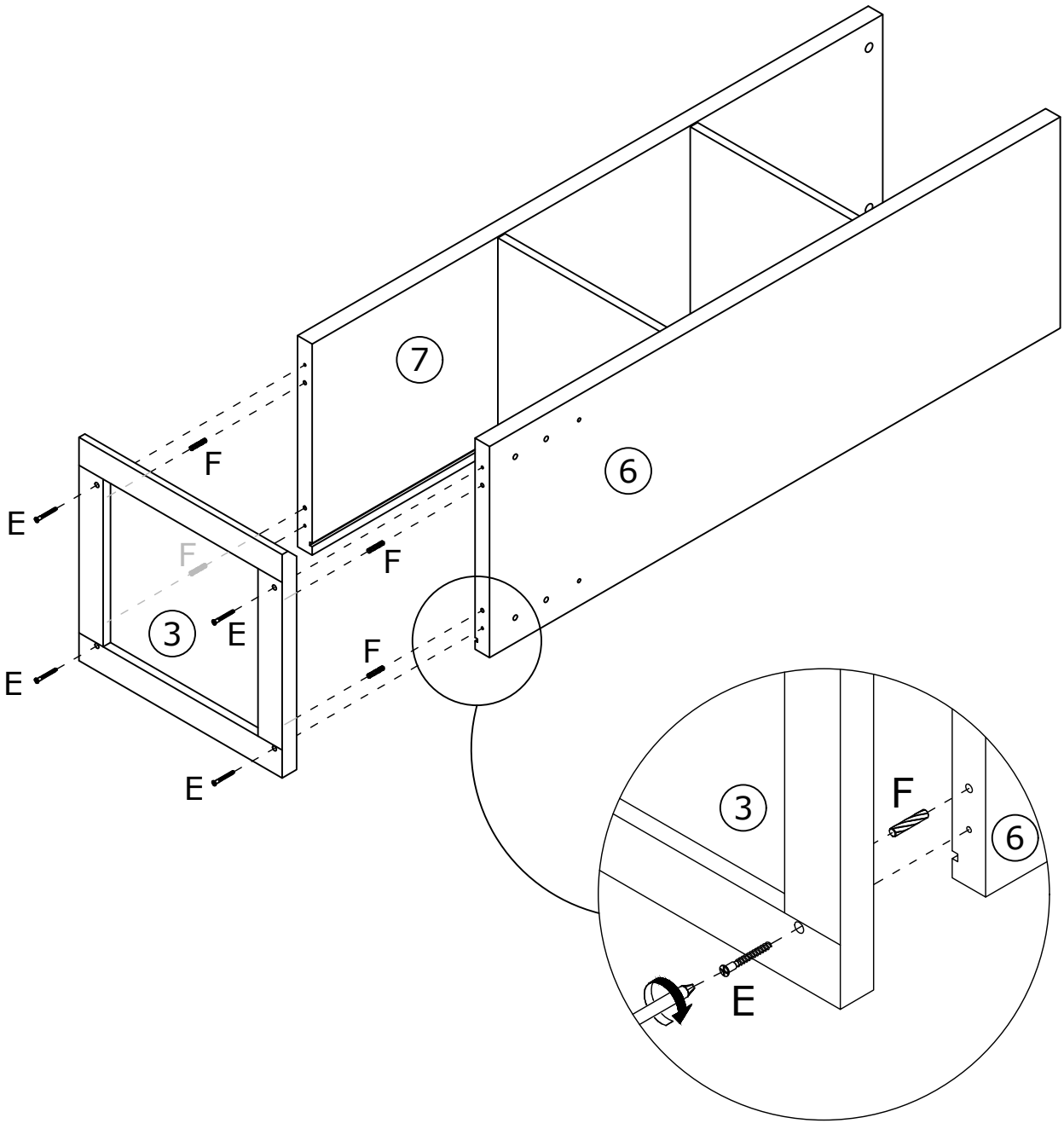

23

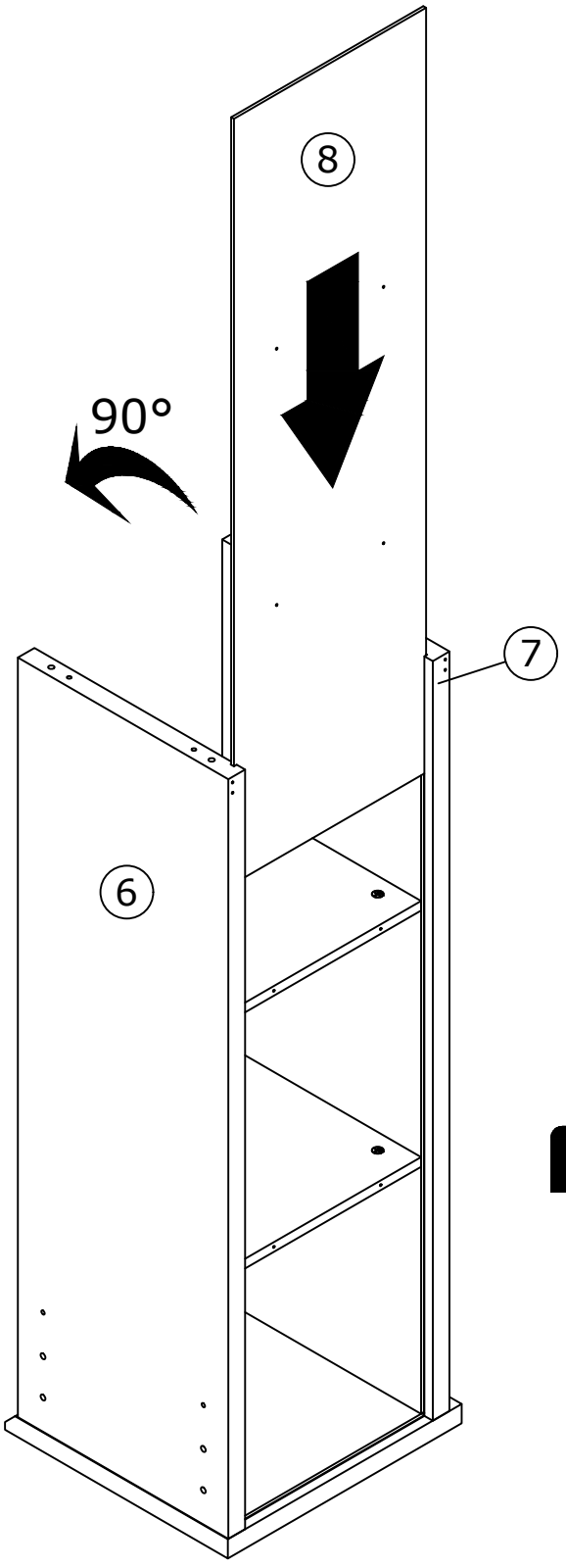

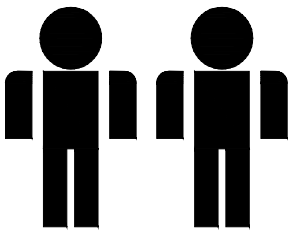

2 OF ADULTS

24

B x 8	C x 4 Ø 6 x 35mm	

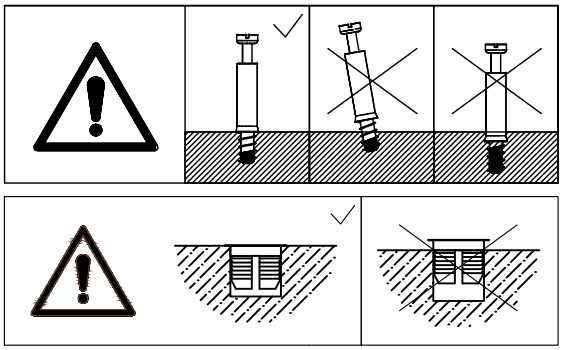

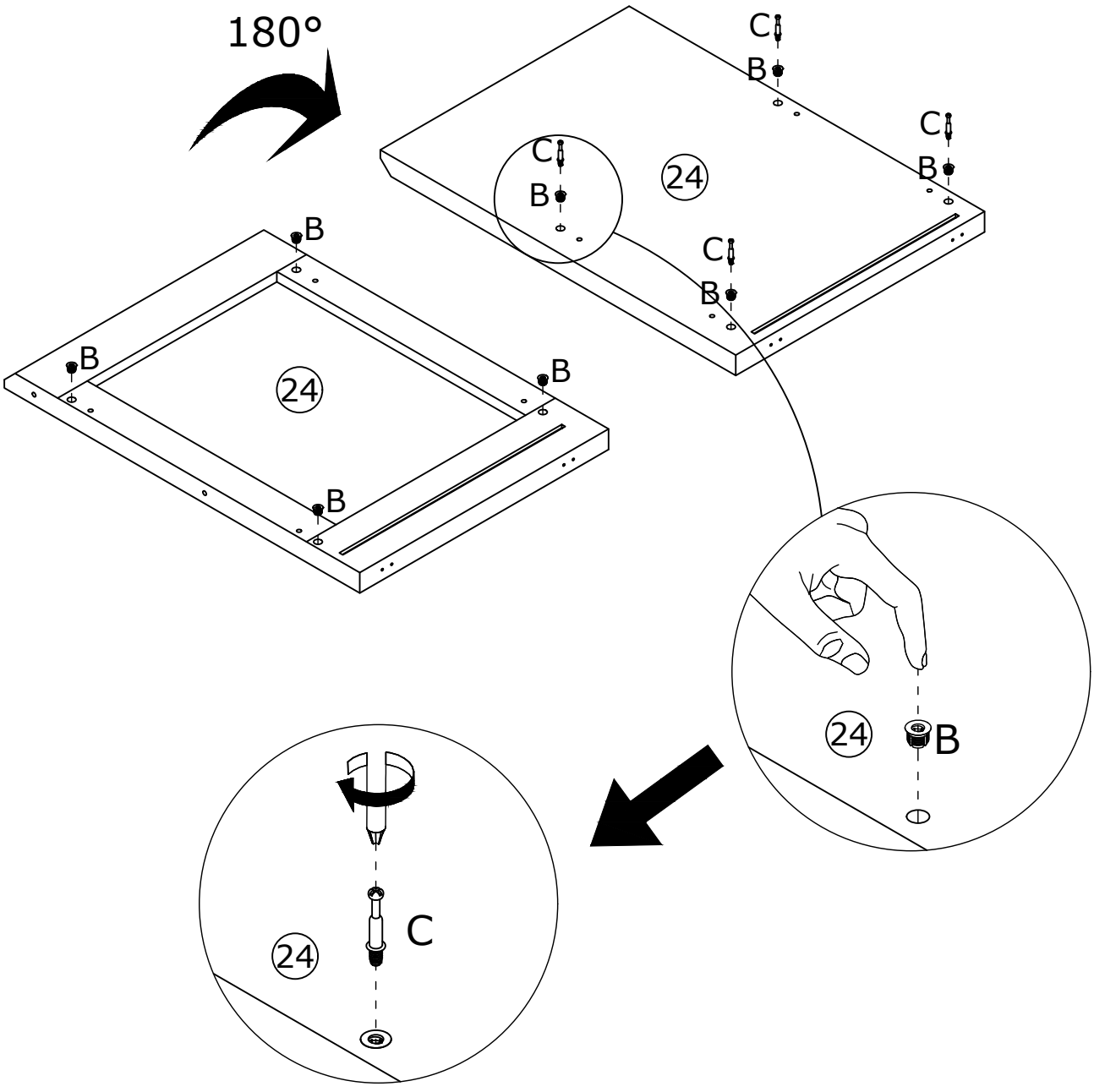

25

A x 4	F x 4	
Ø 15 x 10mm	Ø 6 x 30mm	

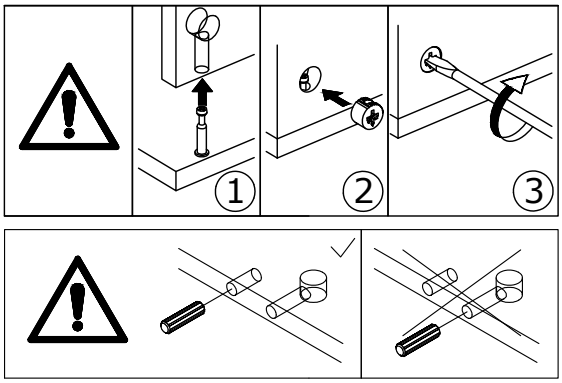

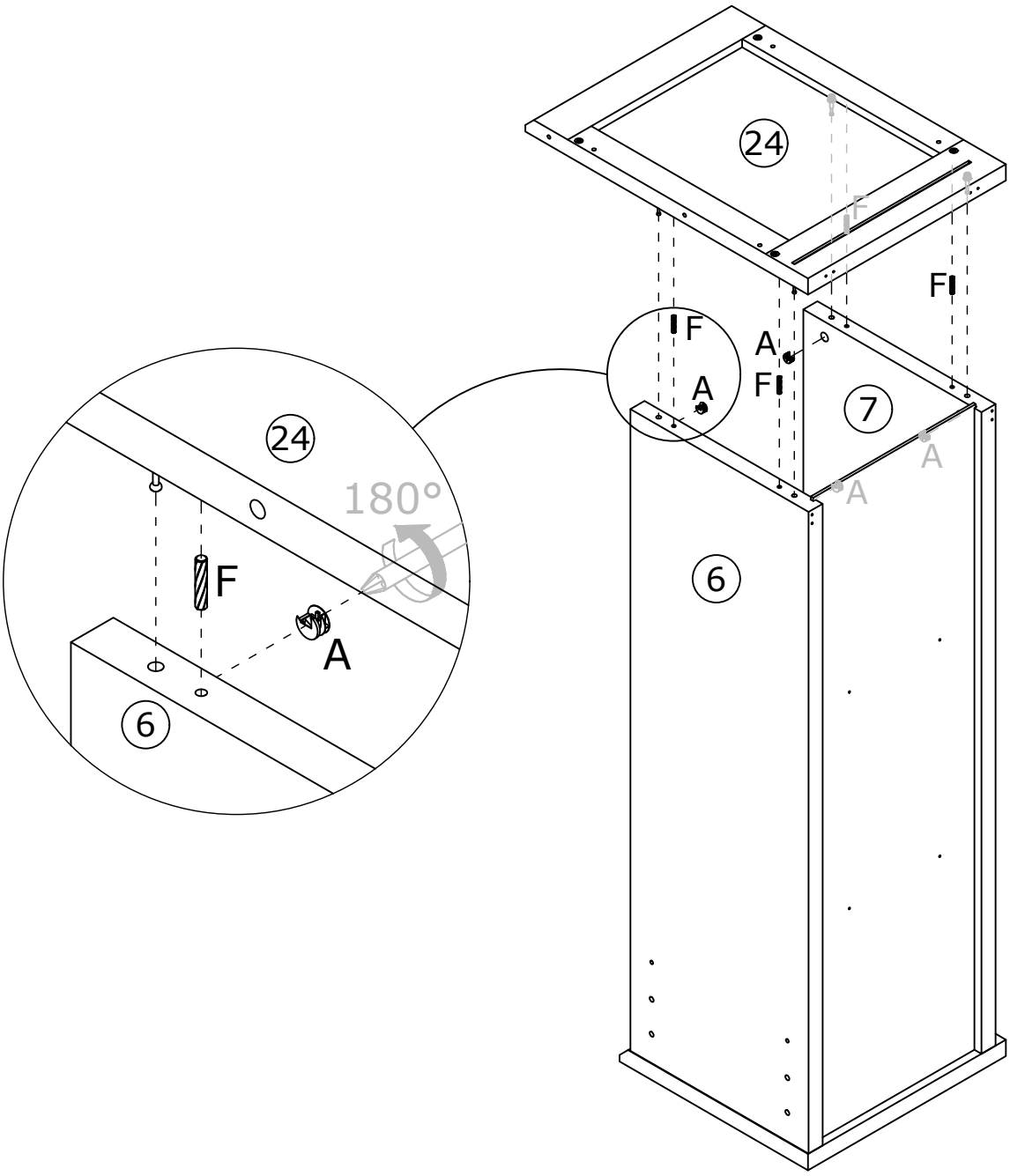

26

R x 4

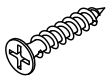

Ø 3.5 x 20mm

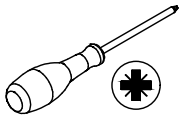

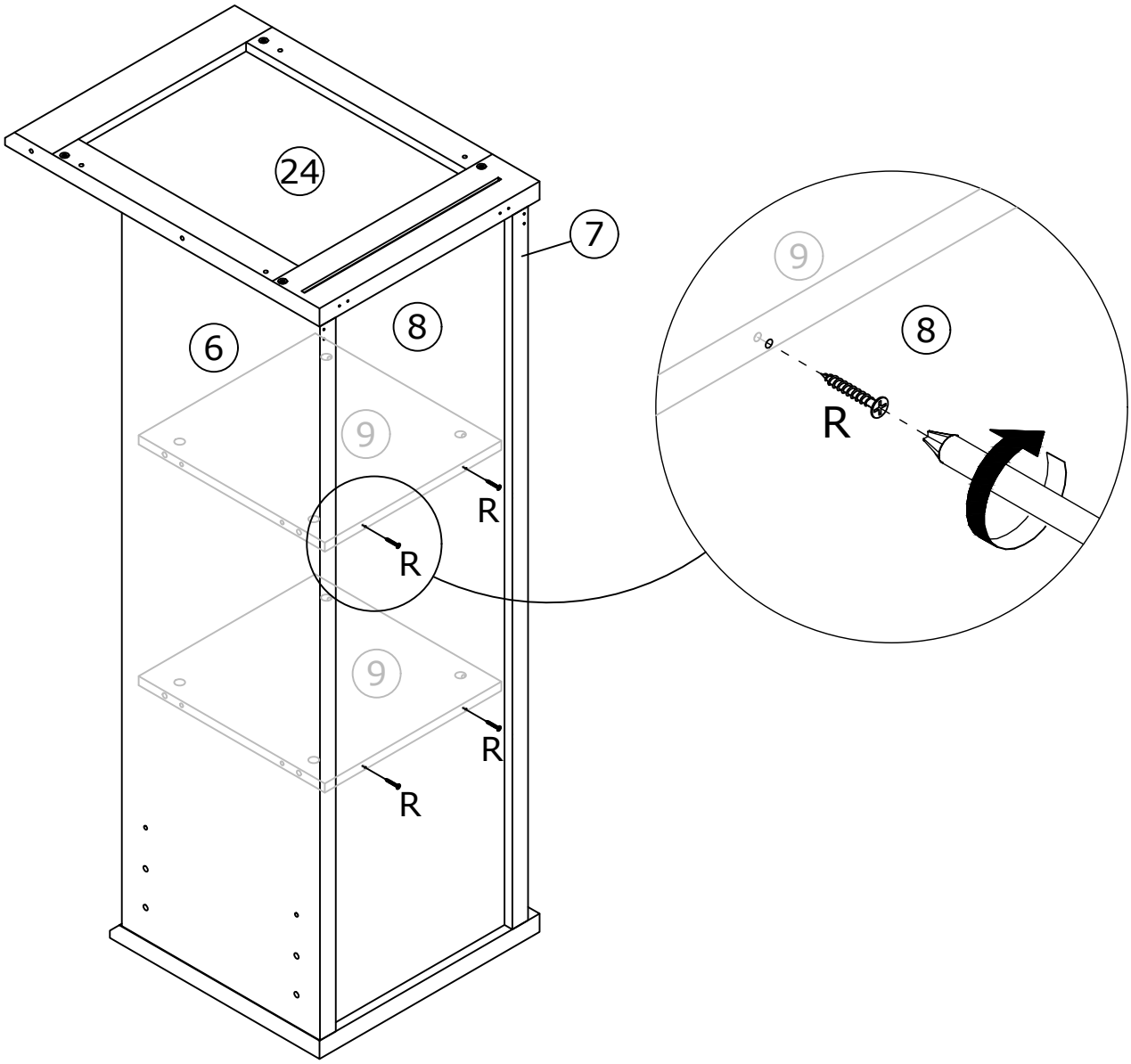

27

B x 8	C x 8	
	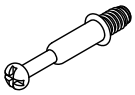 Ø 6 x 35mm	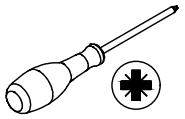

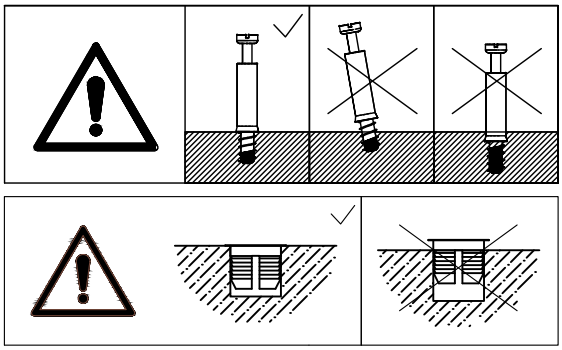

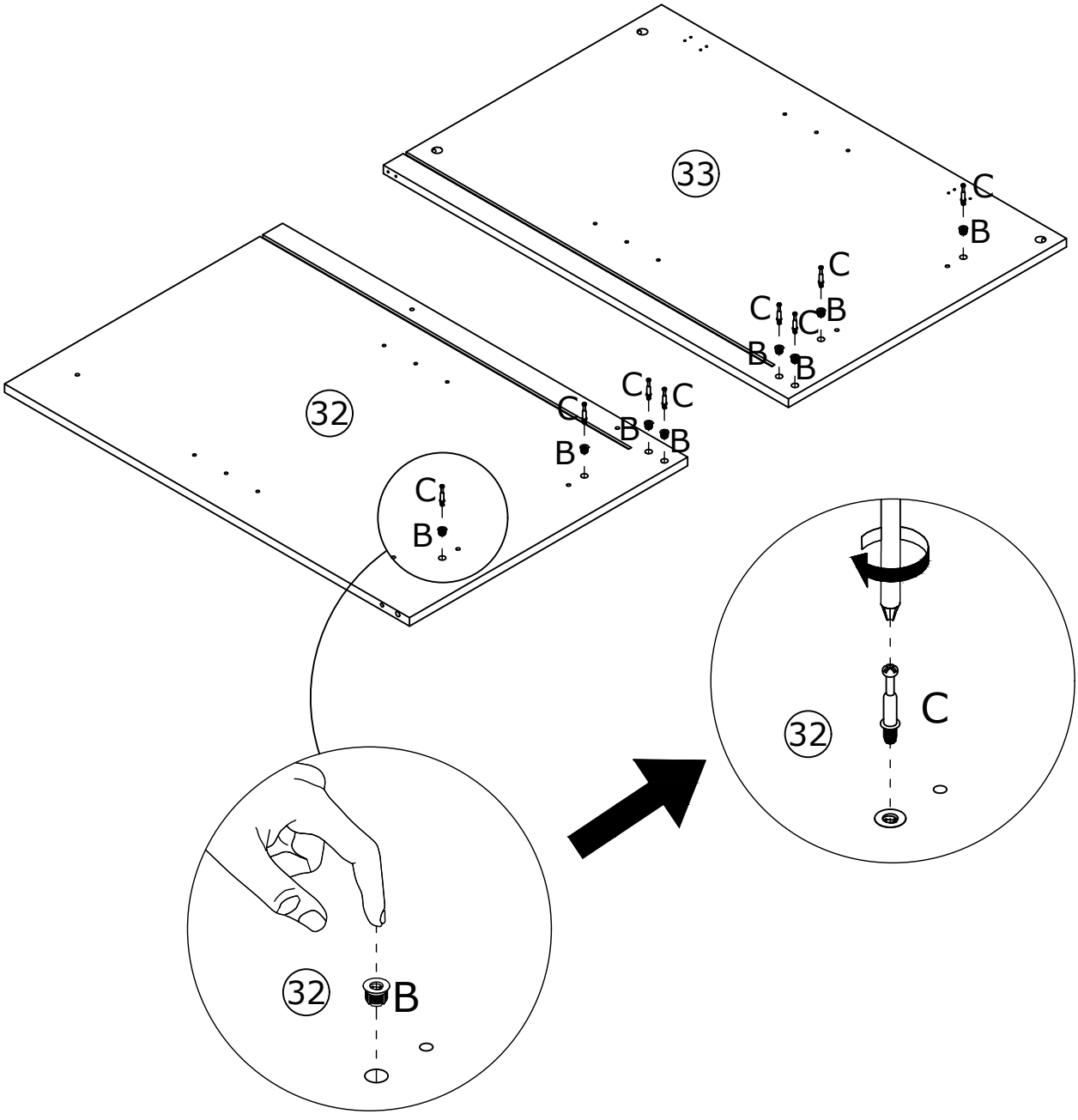

28

A x 8	F x 4	
	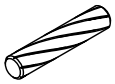	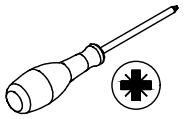
Ø 15 x 10mm	Ø 6 x 30mm	

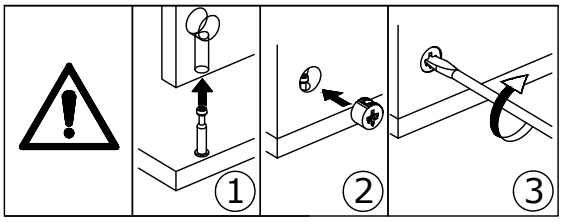

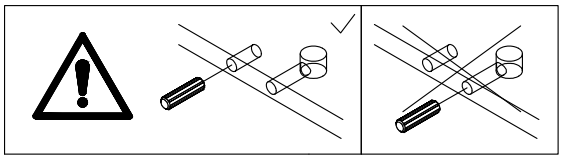

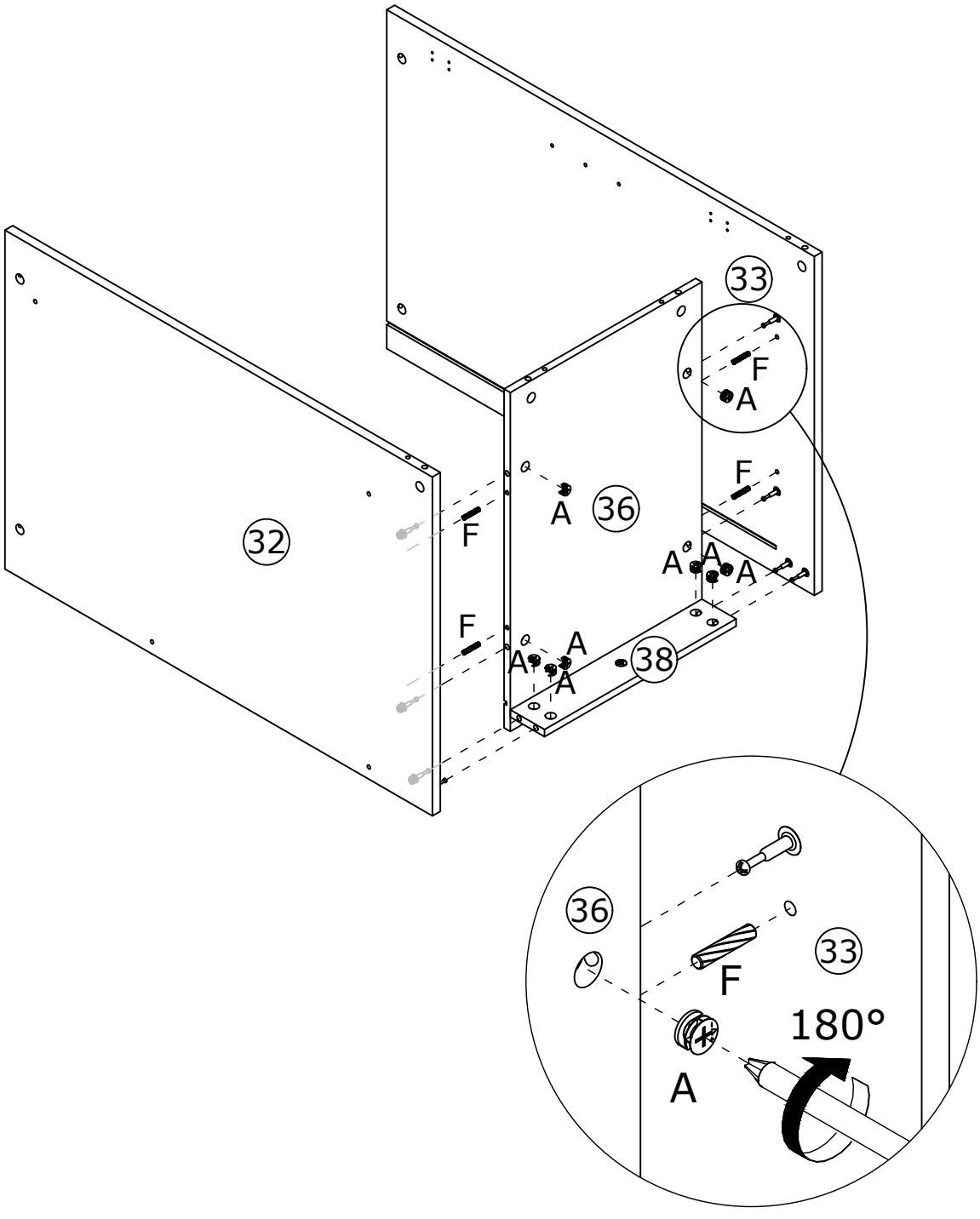

29

A x 4	F x 4	
 Ø 15 x 10mm	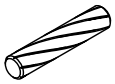 Ø 6 x 30mm	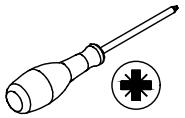

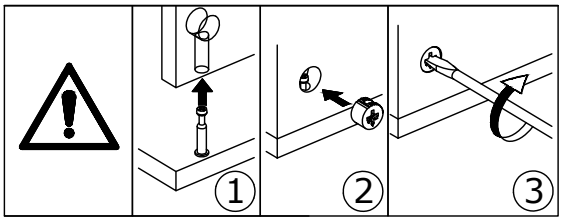

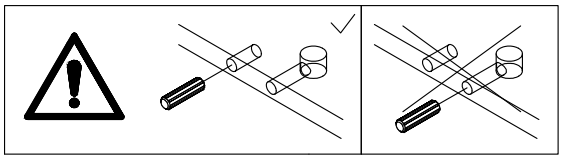

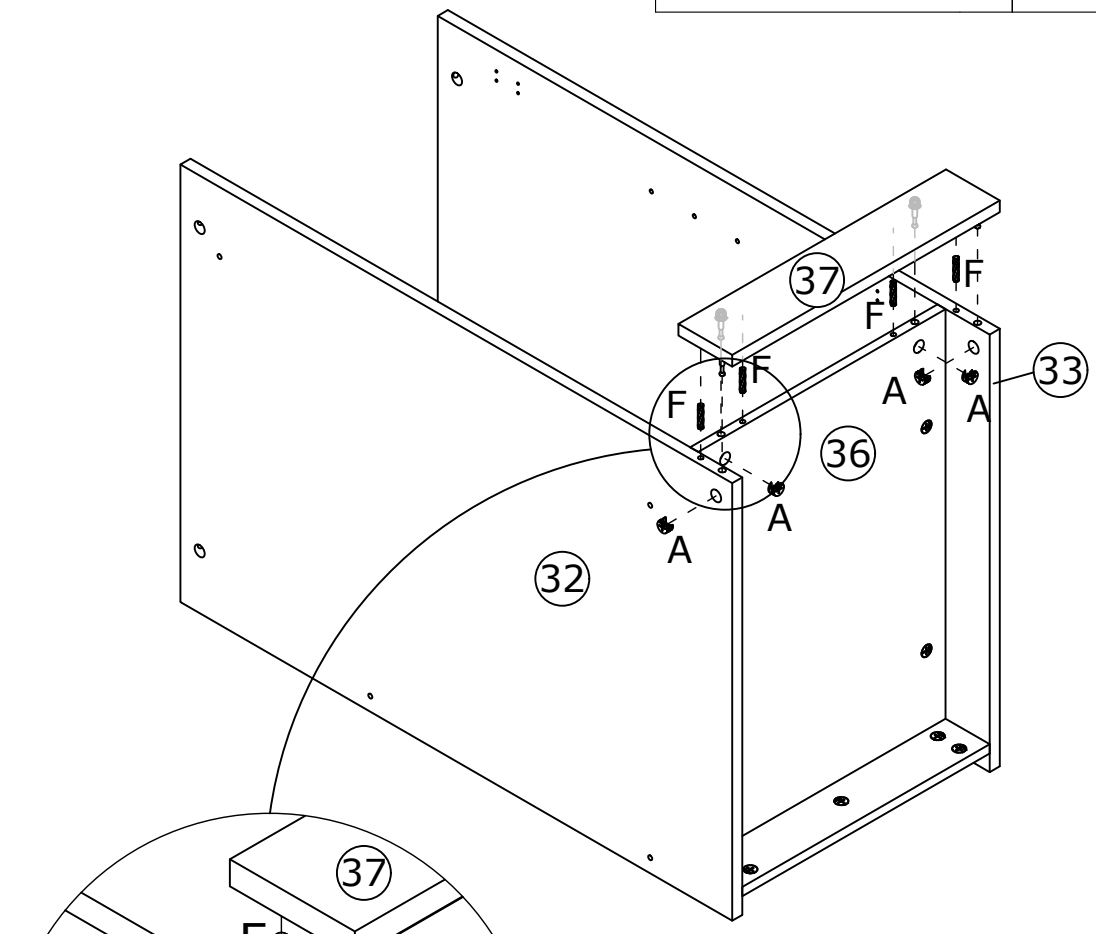

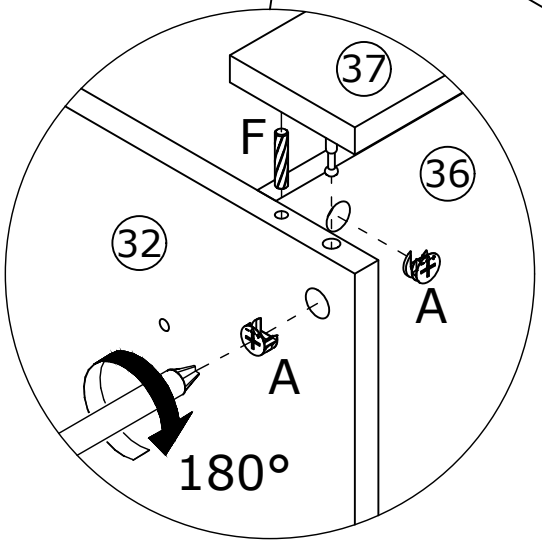

30

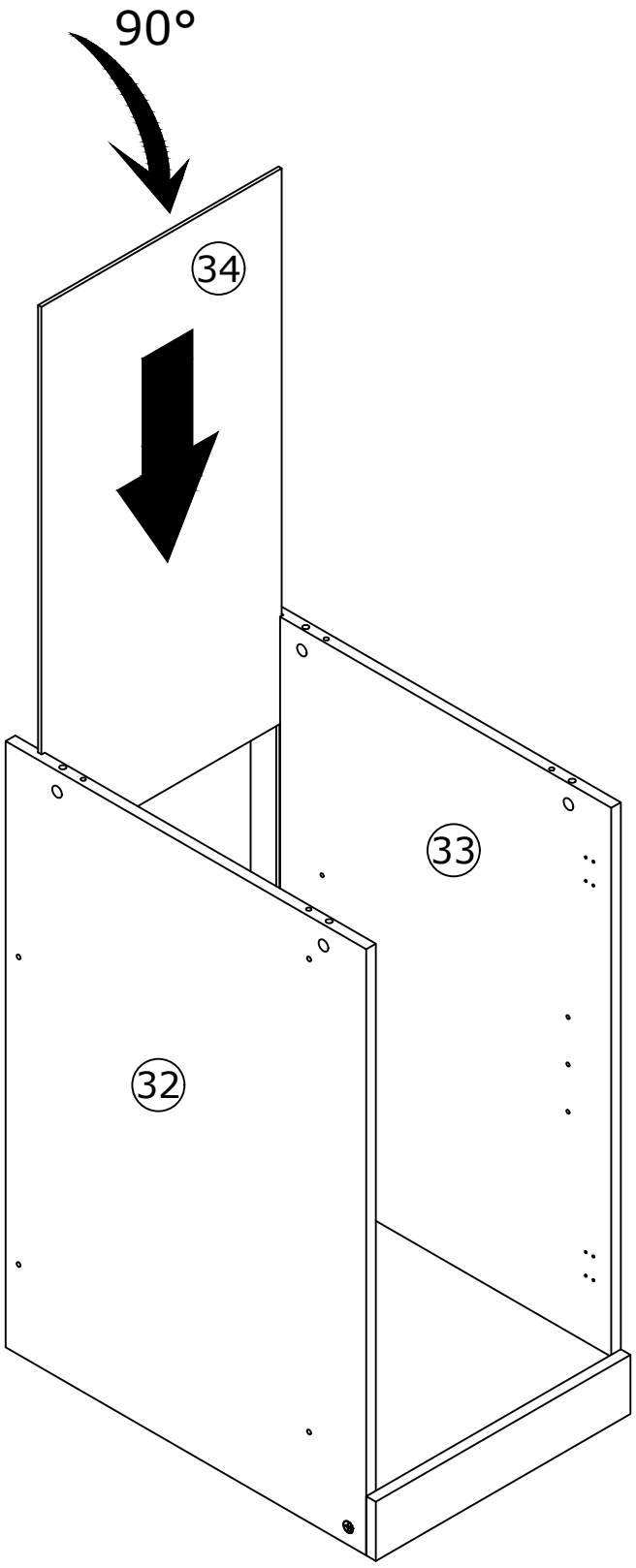

31

C x 4

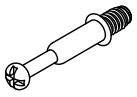

Ø 6 x 35mm

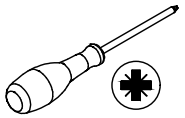

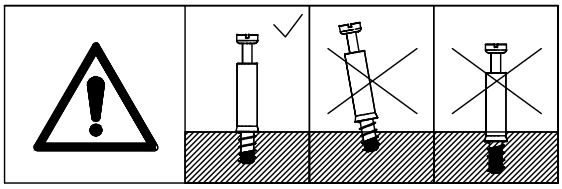

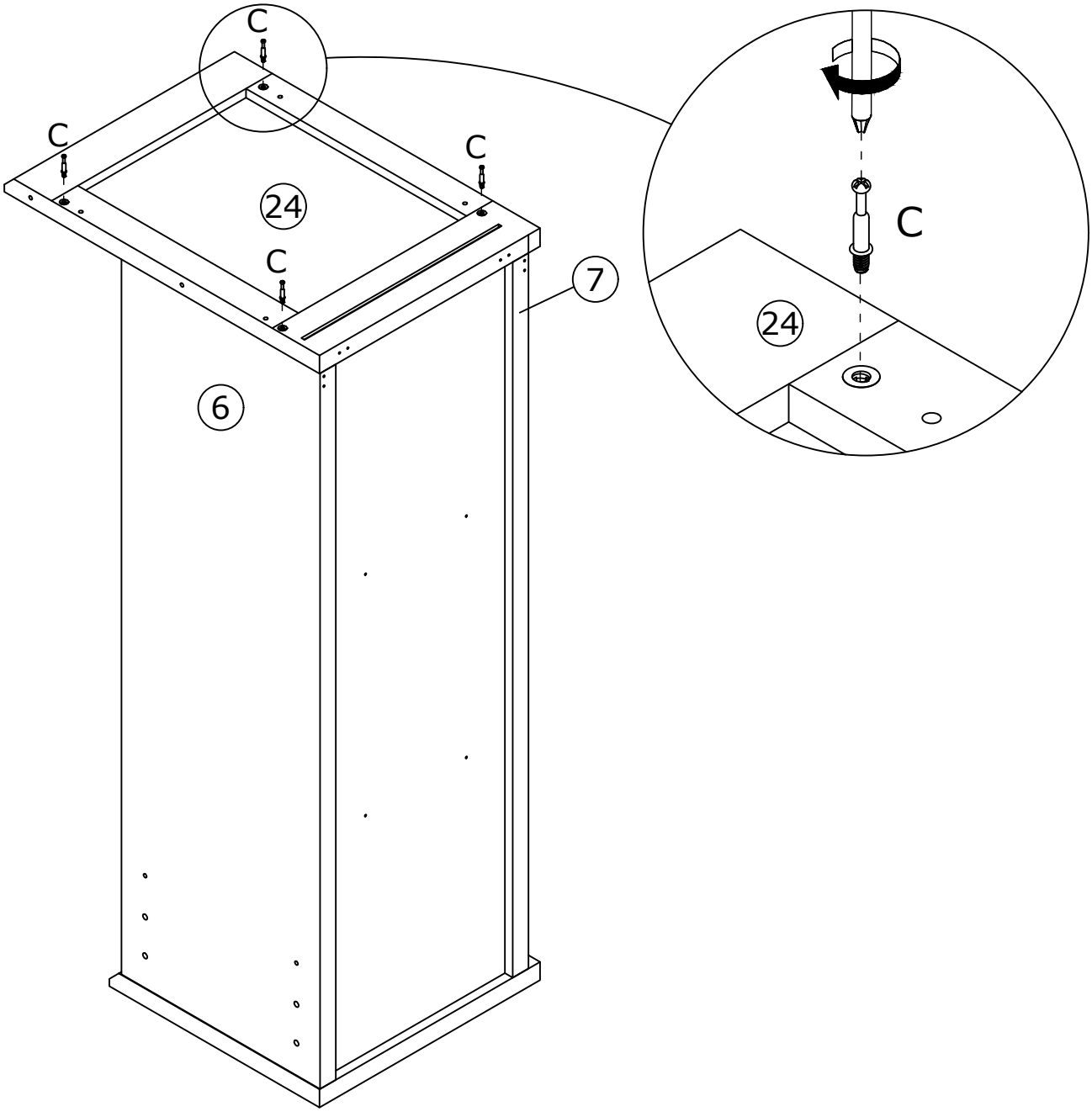

32

A x 4	F x 4	
 Ø 15 x 10mm	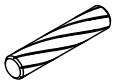 Ø 6 x 30mm	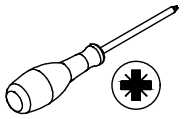

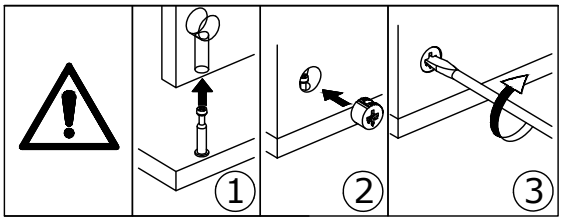

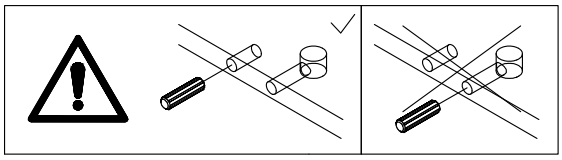

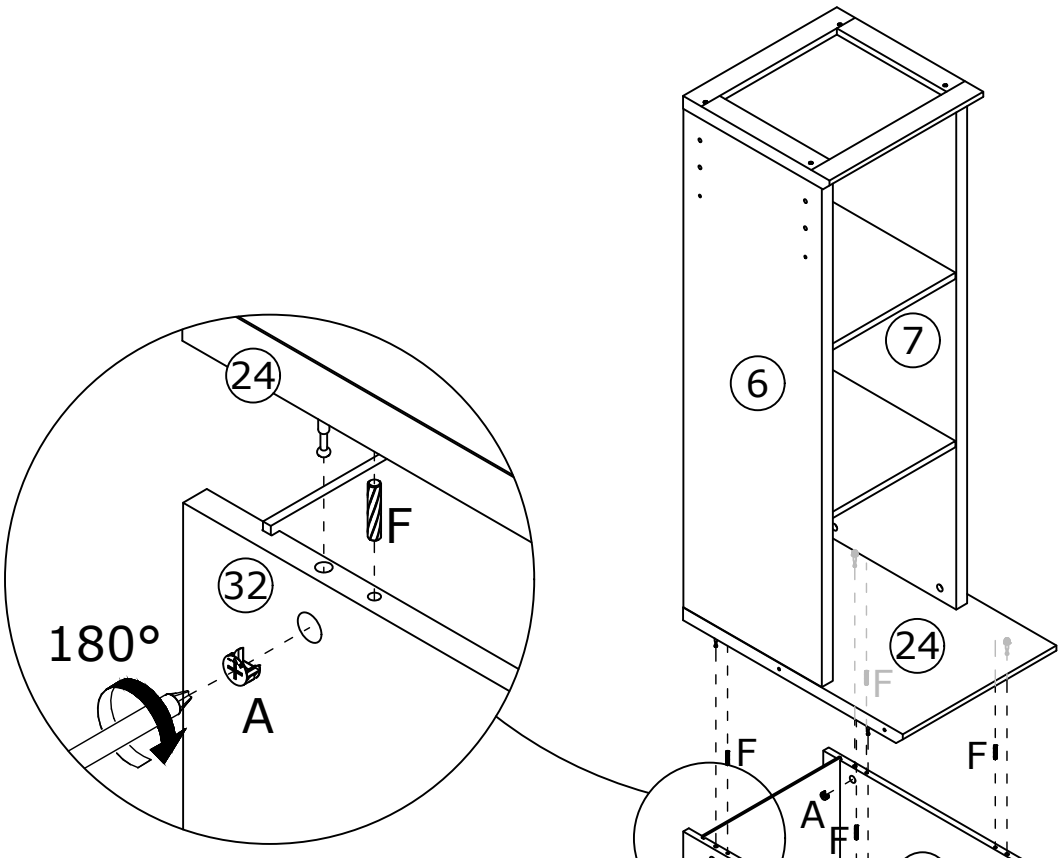

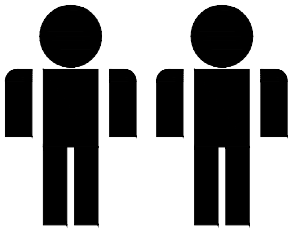

2 OF ADULTS

33

V x 12	X x 2	
 Ø 3.5 x 14mm	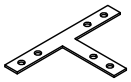	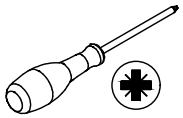

	U	V
	 Ø3.5 x 12mm	 Ø3.5 x 14mm

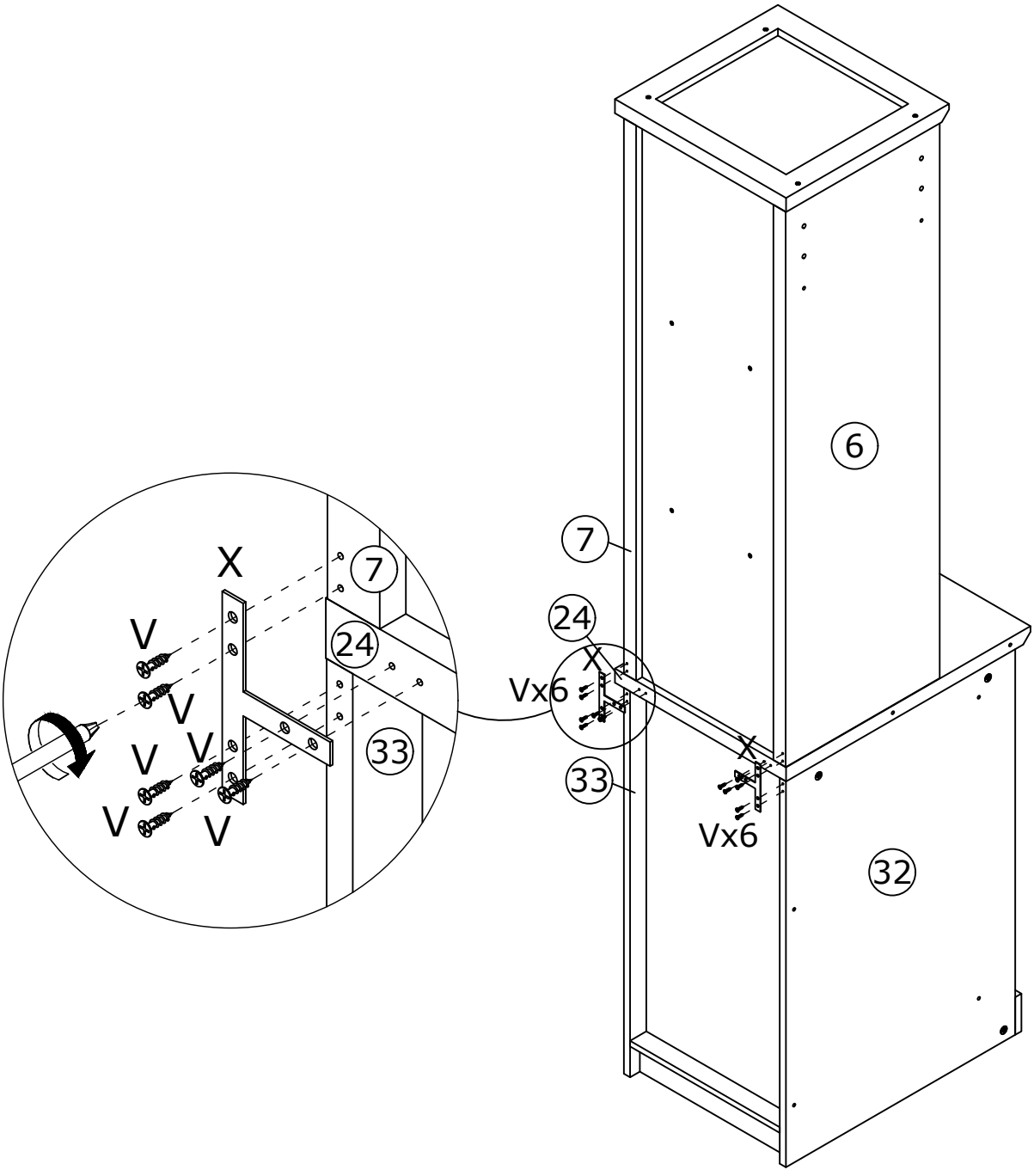

34

B x 4	C x 2	
	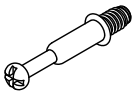 Ø 6 x 35mm	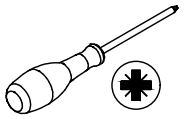

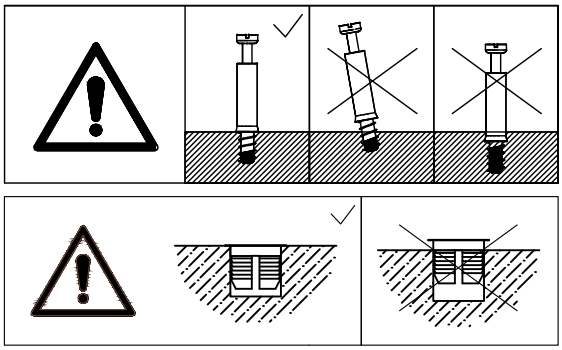

180°

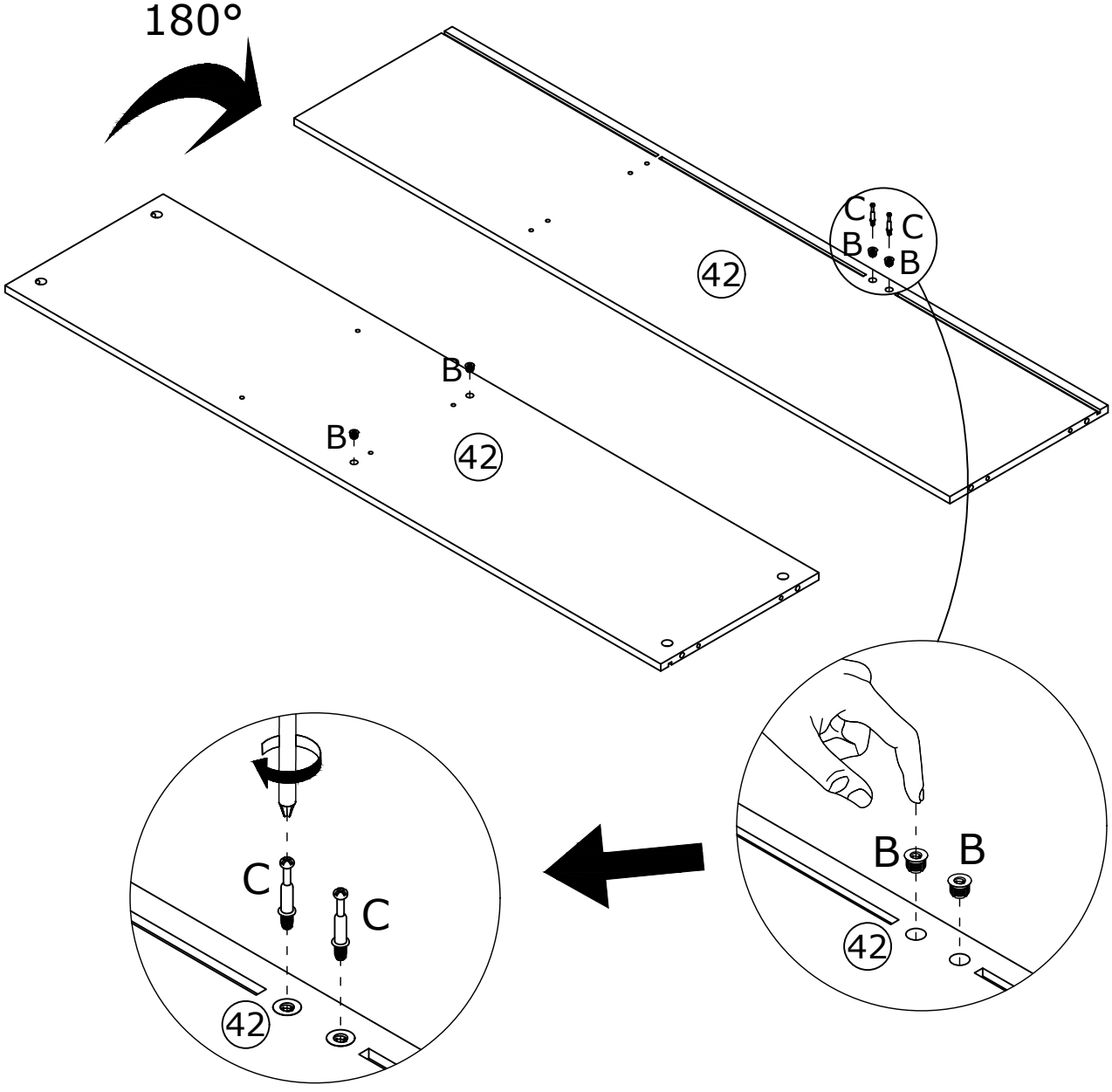

35

E x 2	F x 2	
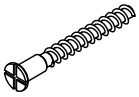 Ø 5 x 40mm	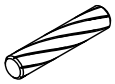 Ø 6 x 30mm	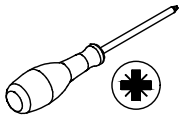

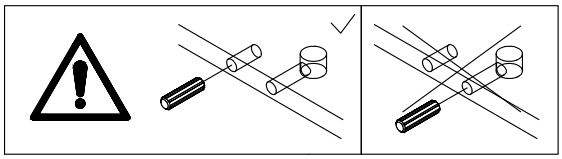

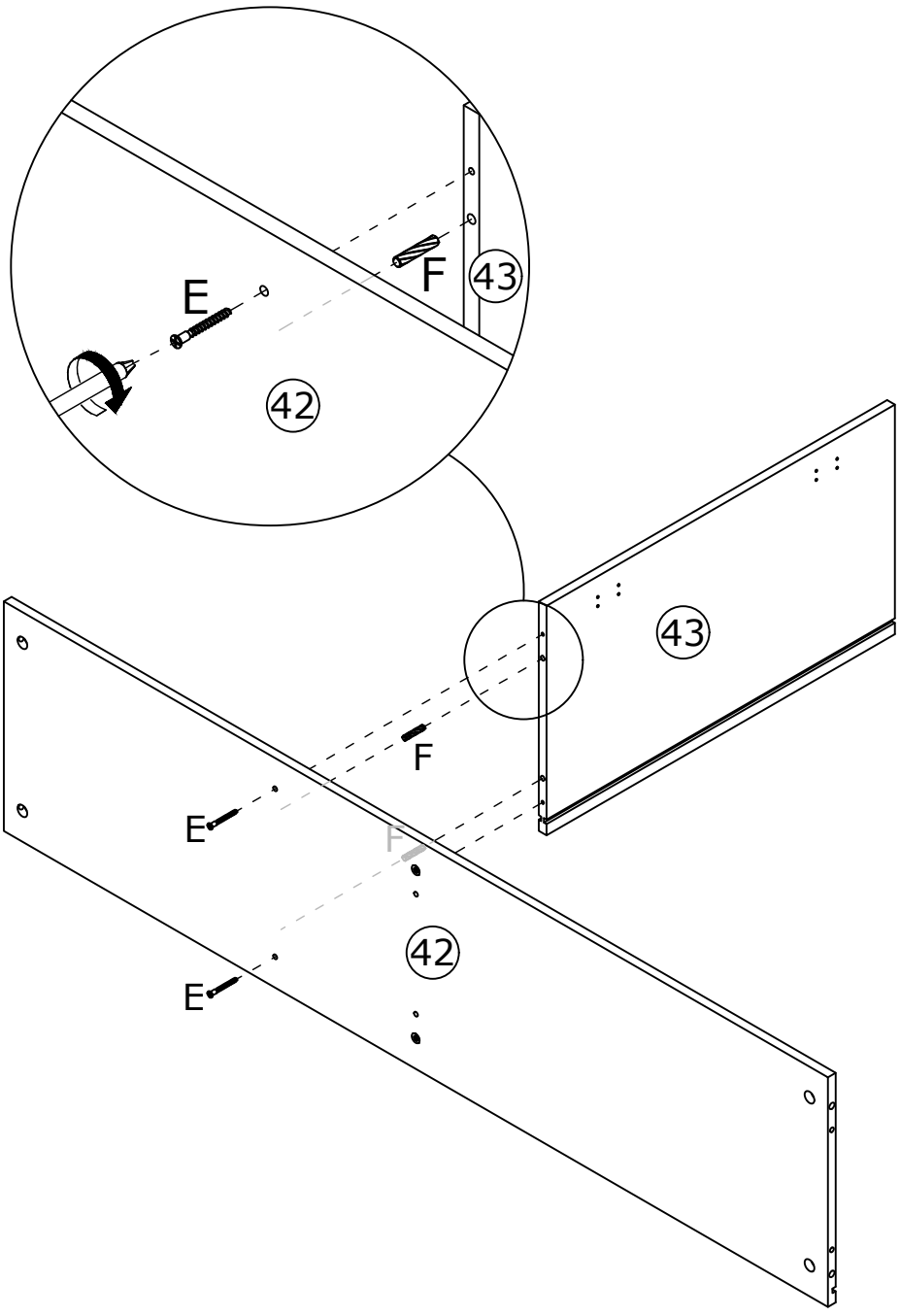

36

A x 2



Ø 15 x 10mm

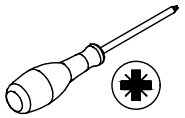

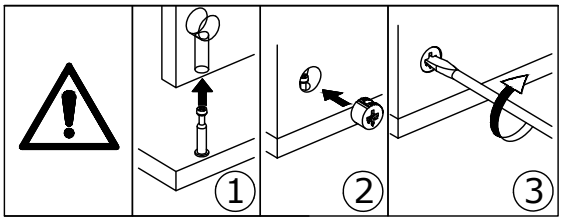

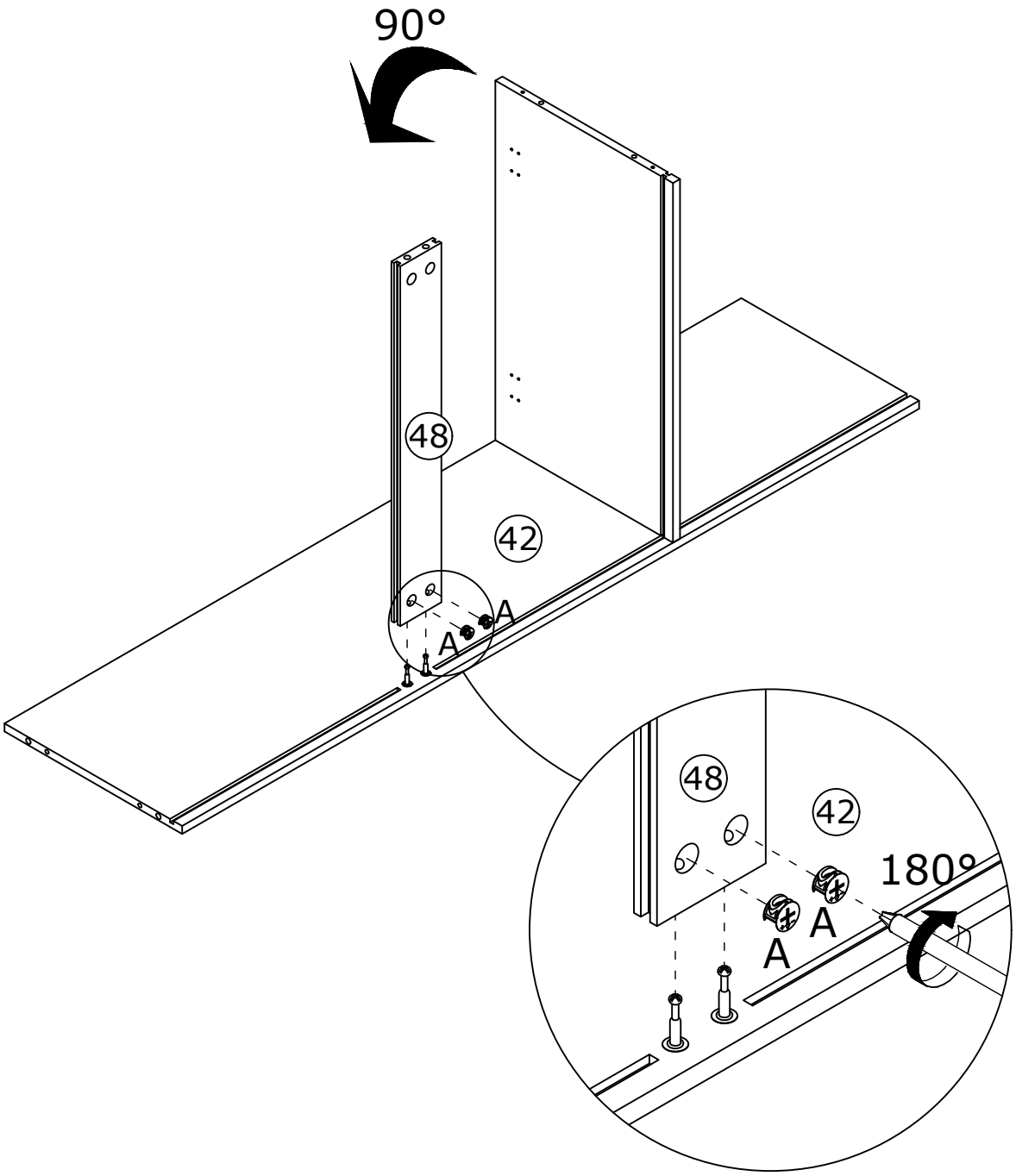

37

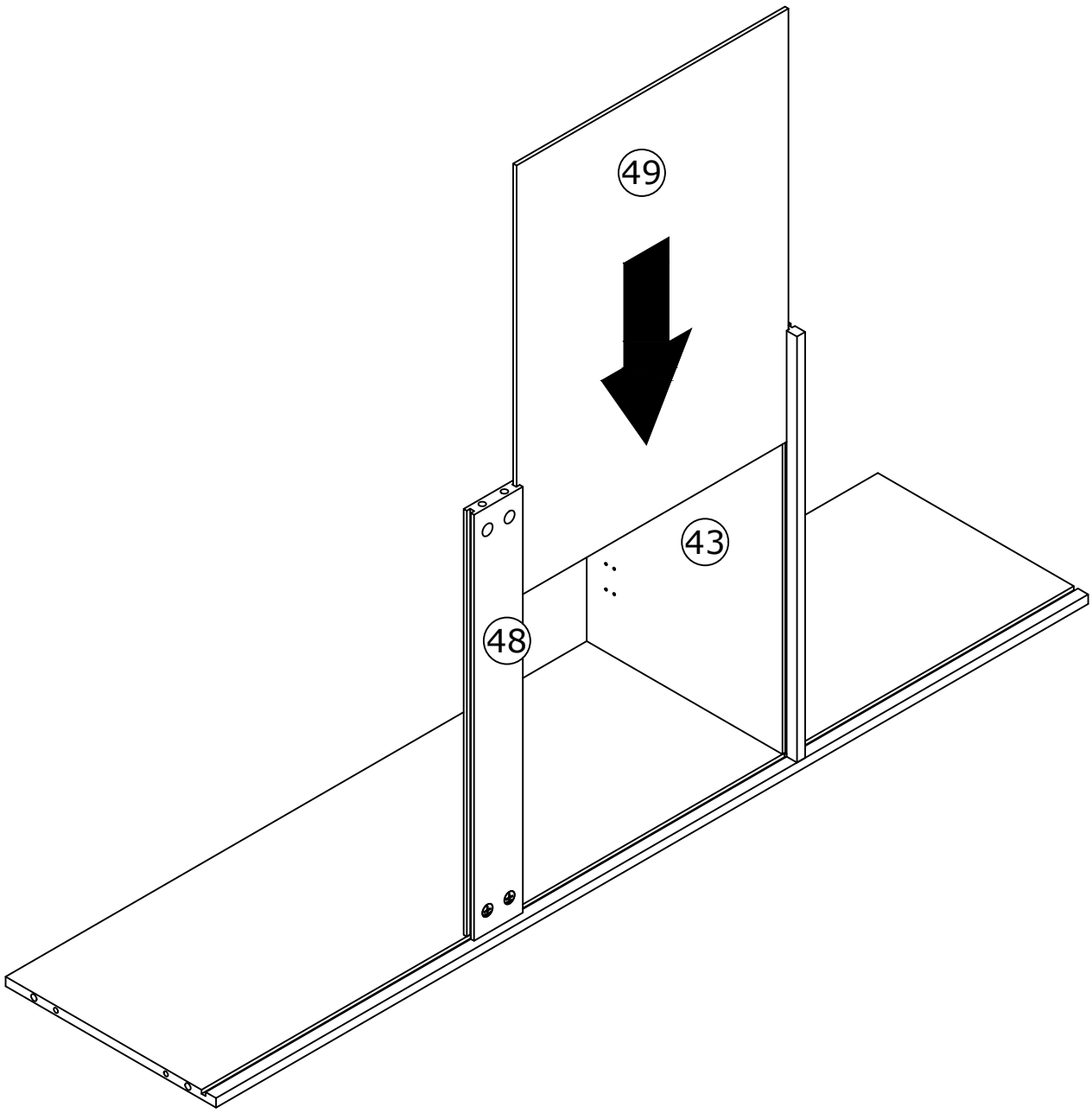

38

B x 6	C x 6	
	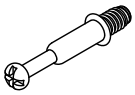 Ø 6 x 35mm	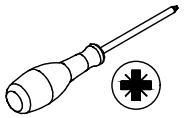

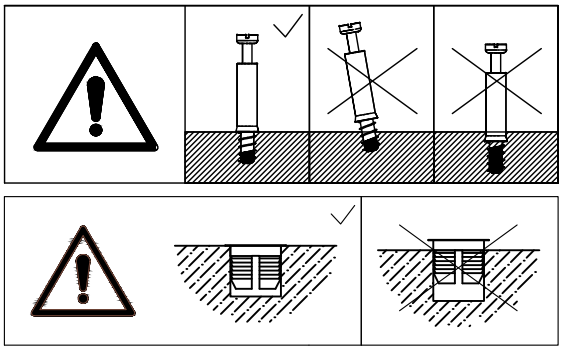

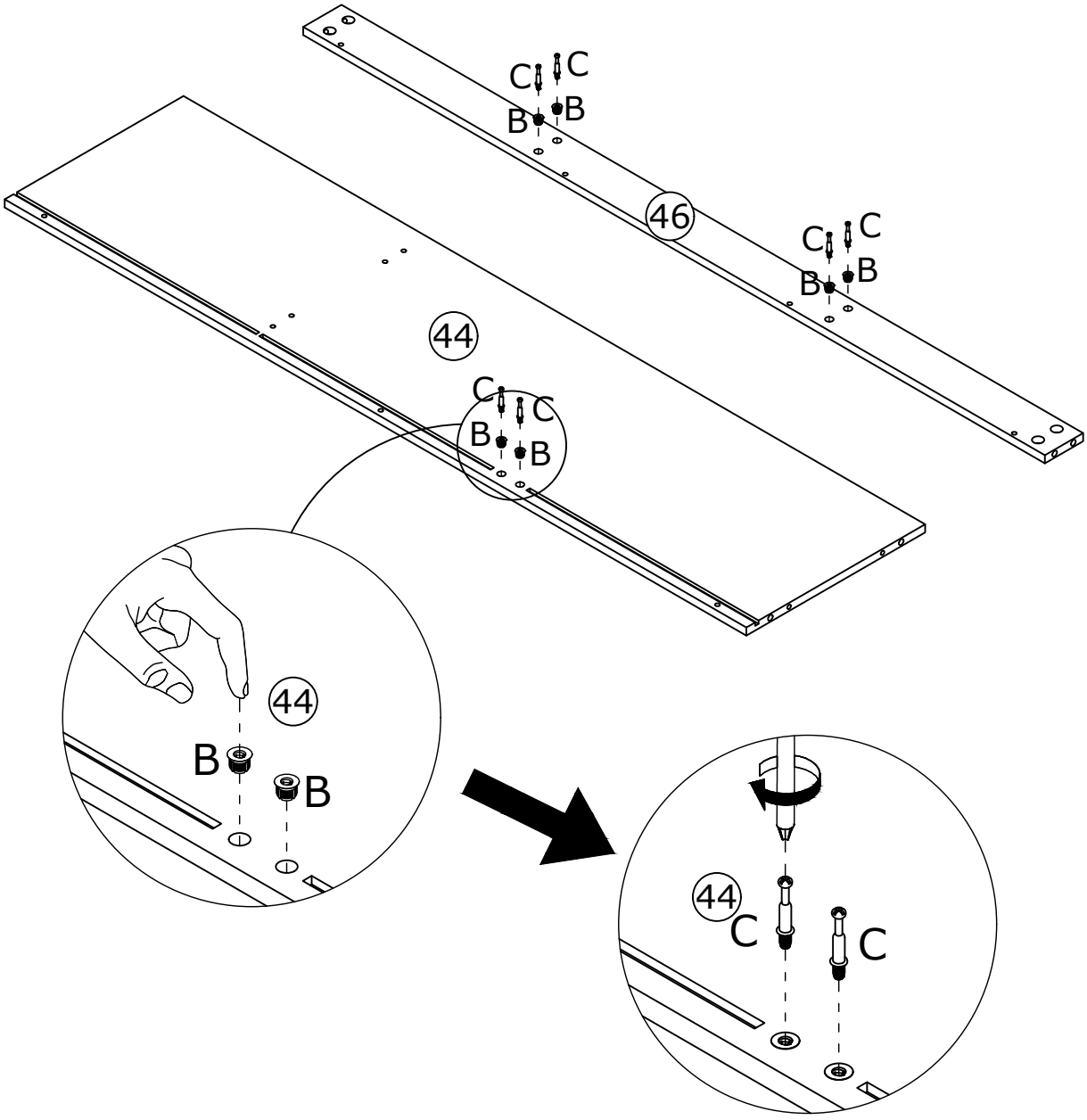

39

E x 3	F x 2	
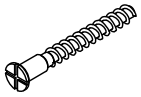 Ø 5 x 40mm	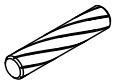 Ø 6 x 30mm	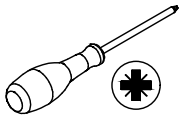

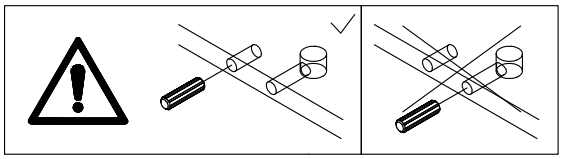

Warning: Prevent panels from tipping over.

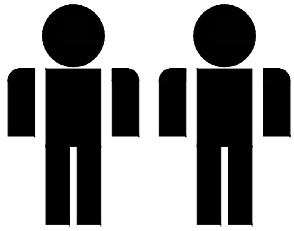

2 OF ADULTS

40

A x 2	E x 2	F x 2	
	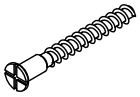	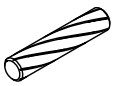	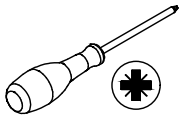
Ø 15 x 10mm	Ø 5 x 40mm	Ø 6 x 30mm	

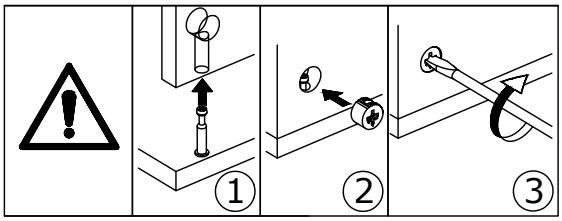

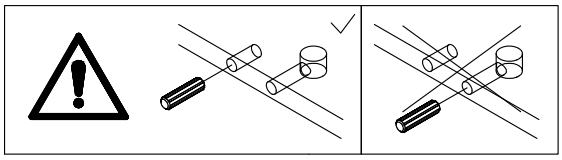

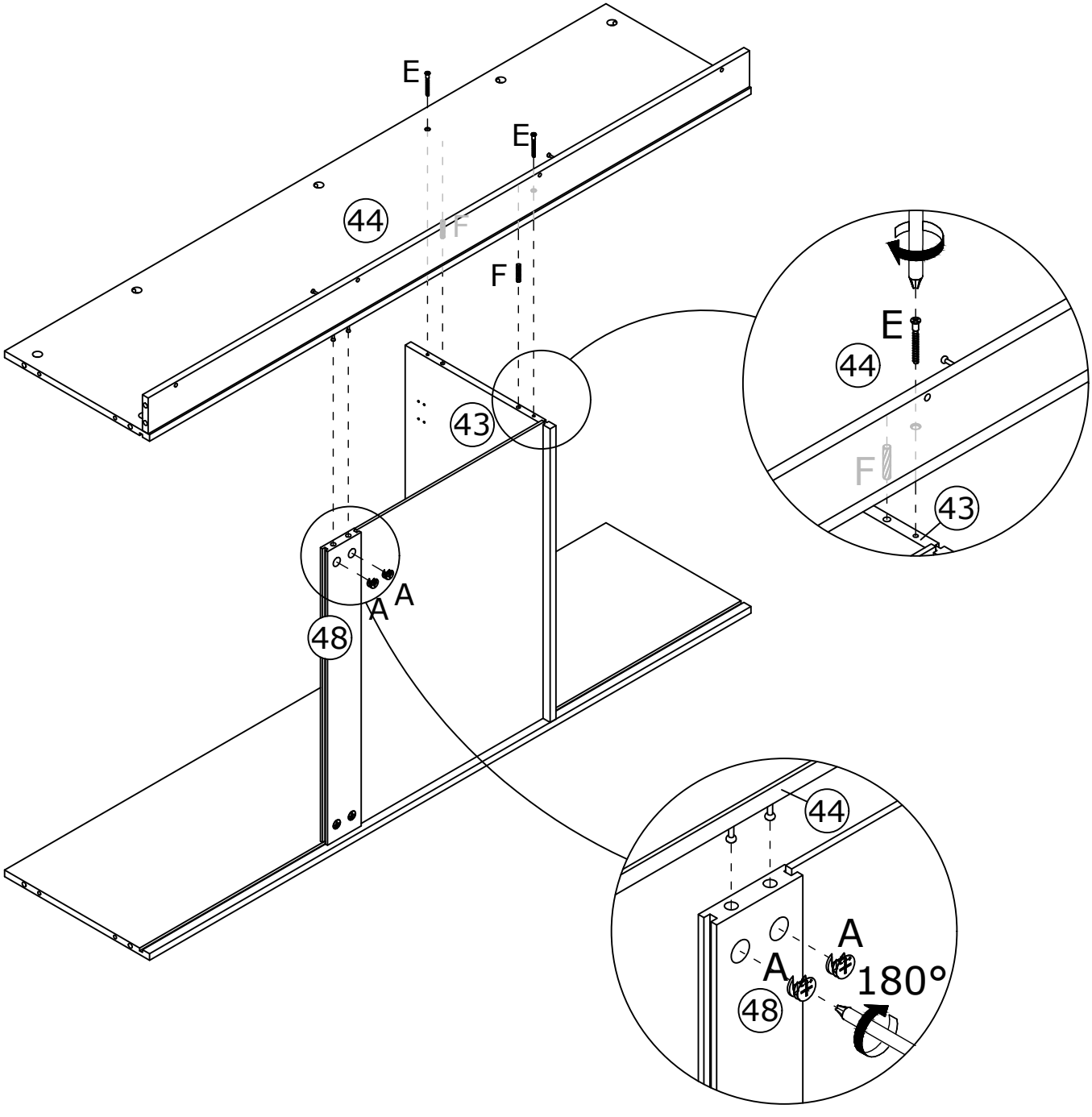

41

B x 11	C x 11	
	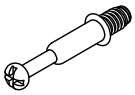 Ø 6 x 35mm	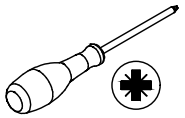

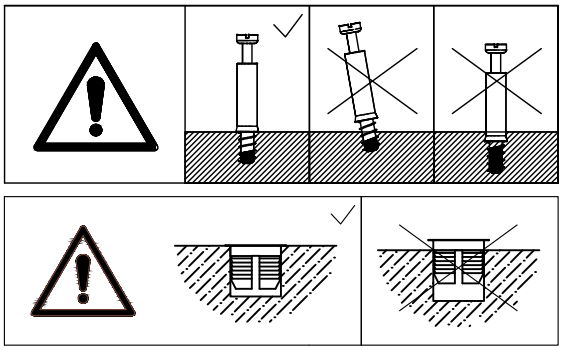

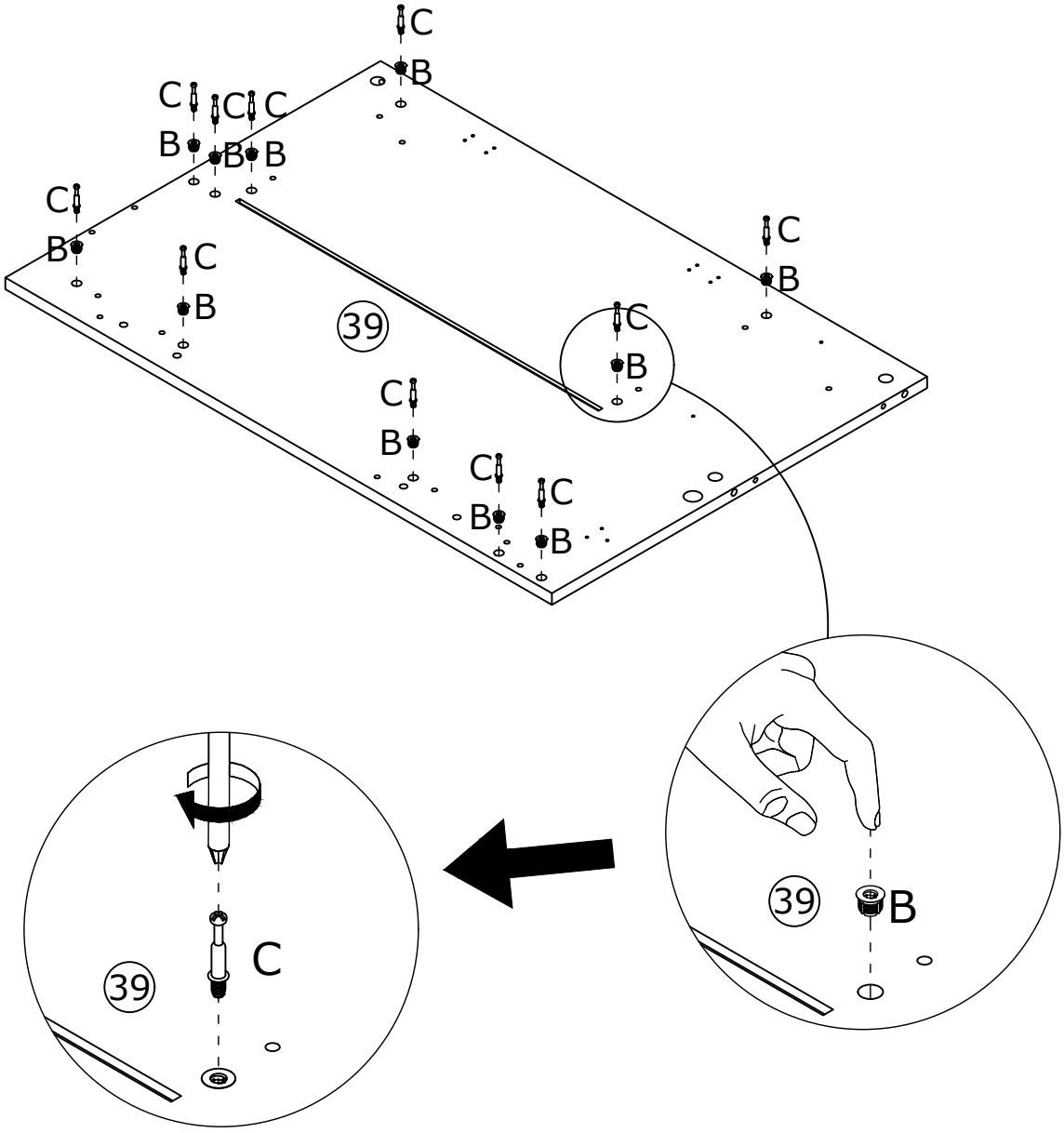

42

U x 2	W x 1	
		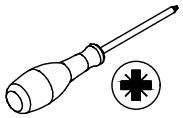
Ø 3.5 x 12mm	300mm	

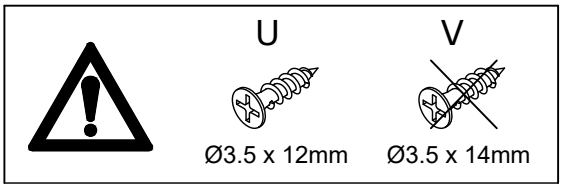

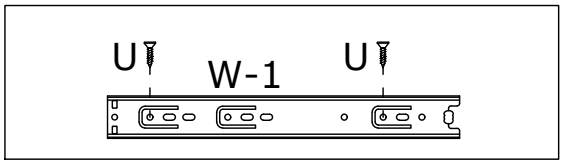

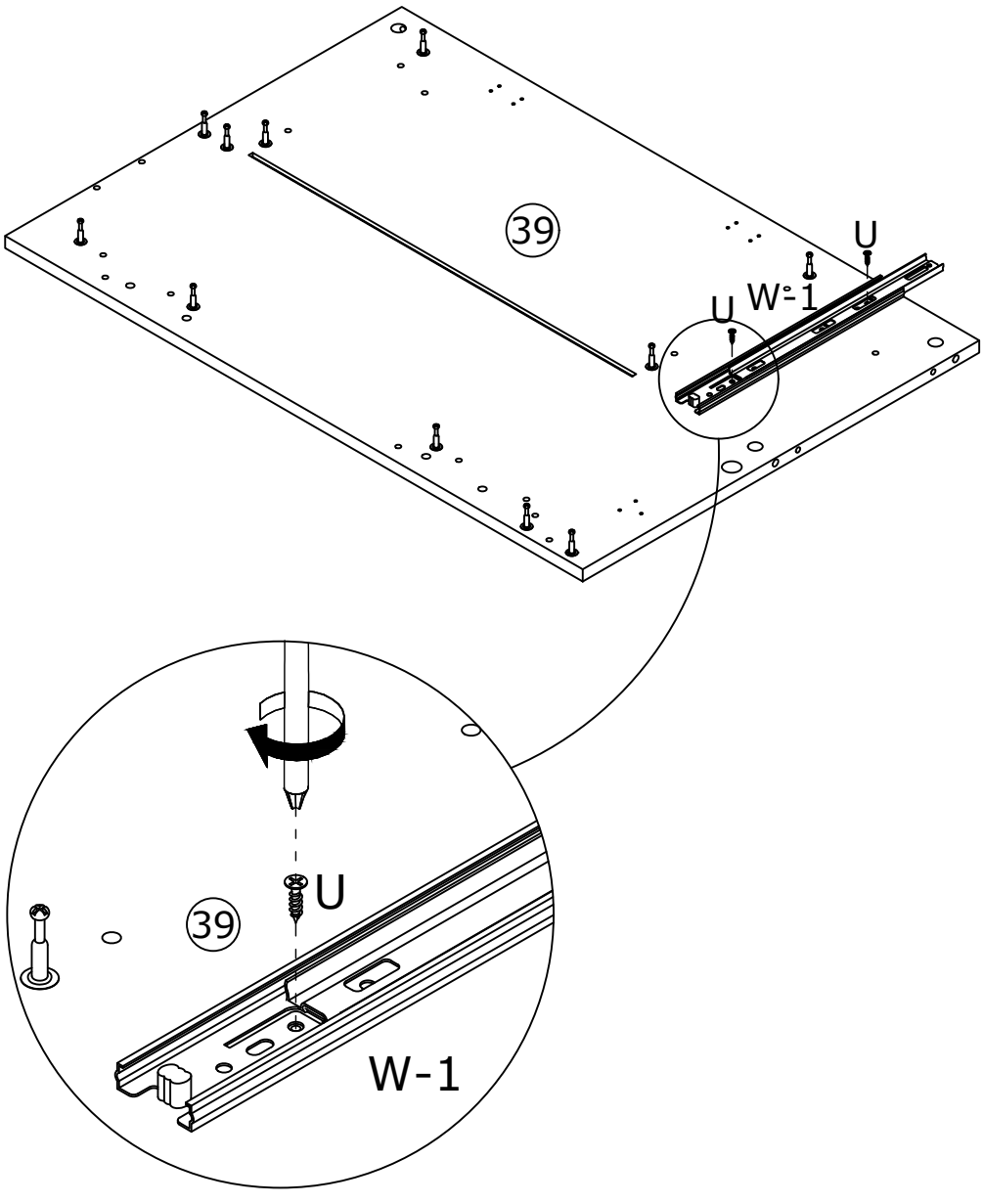

43

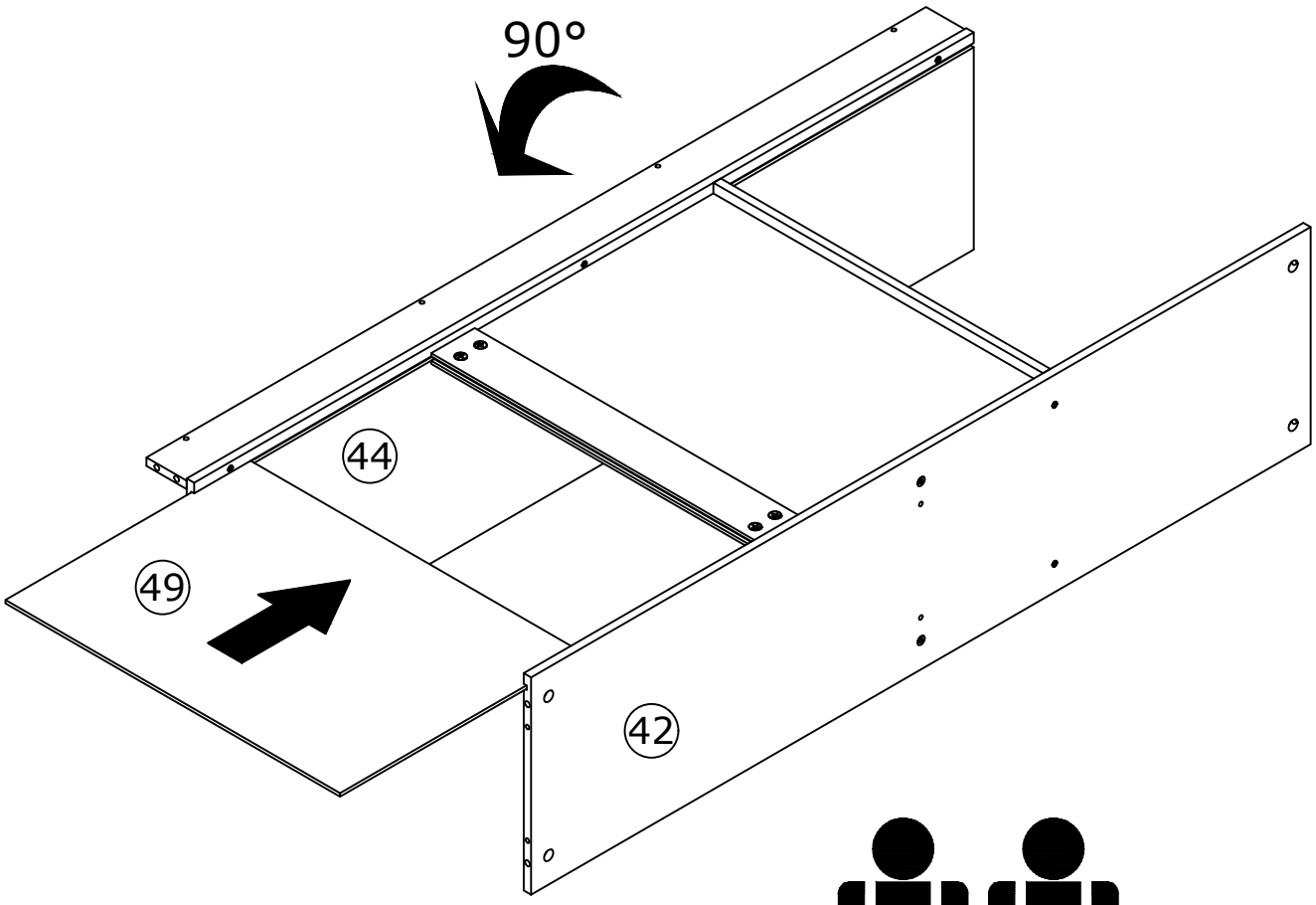

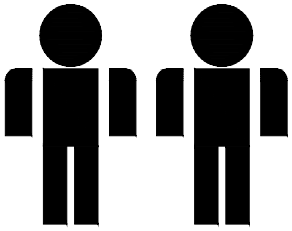

2 OF ADULTS

44

A x 6	F x 4	
 Ø 15 x 10mm	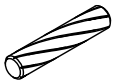 Ø 6 x 30mm	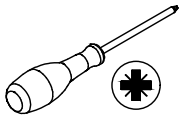

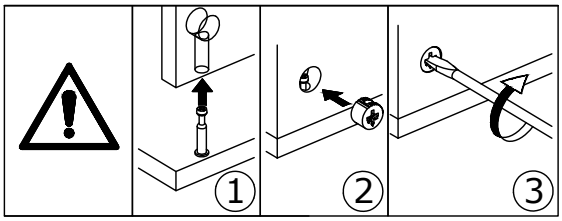

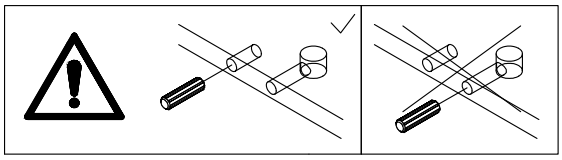

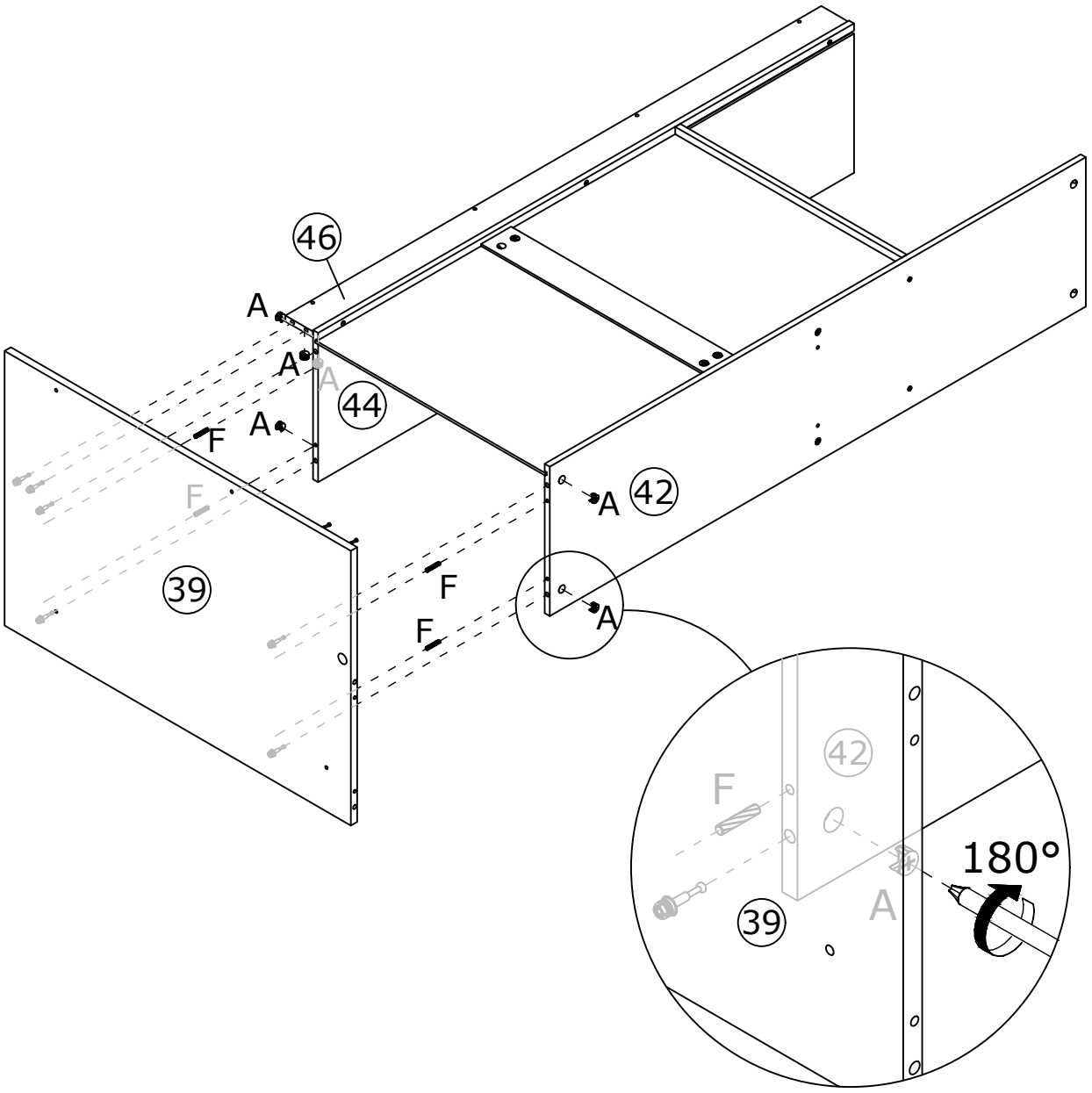

45

F x 2

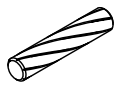

Ø 6 x 30mm

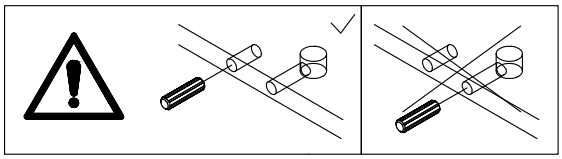

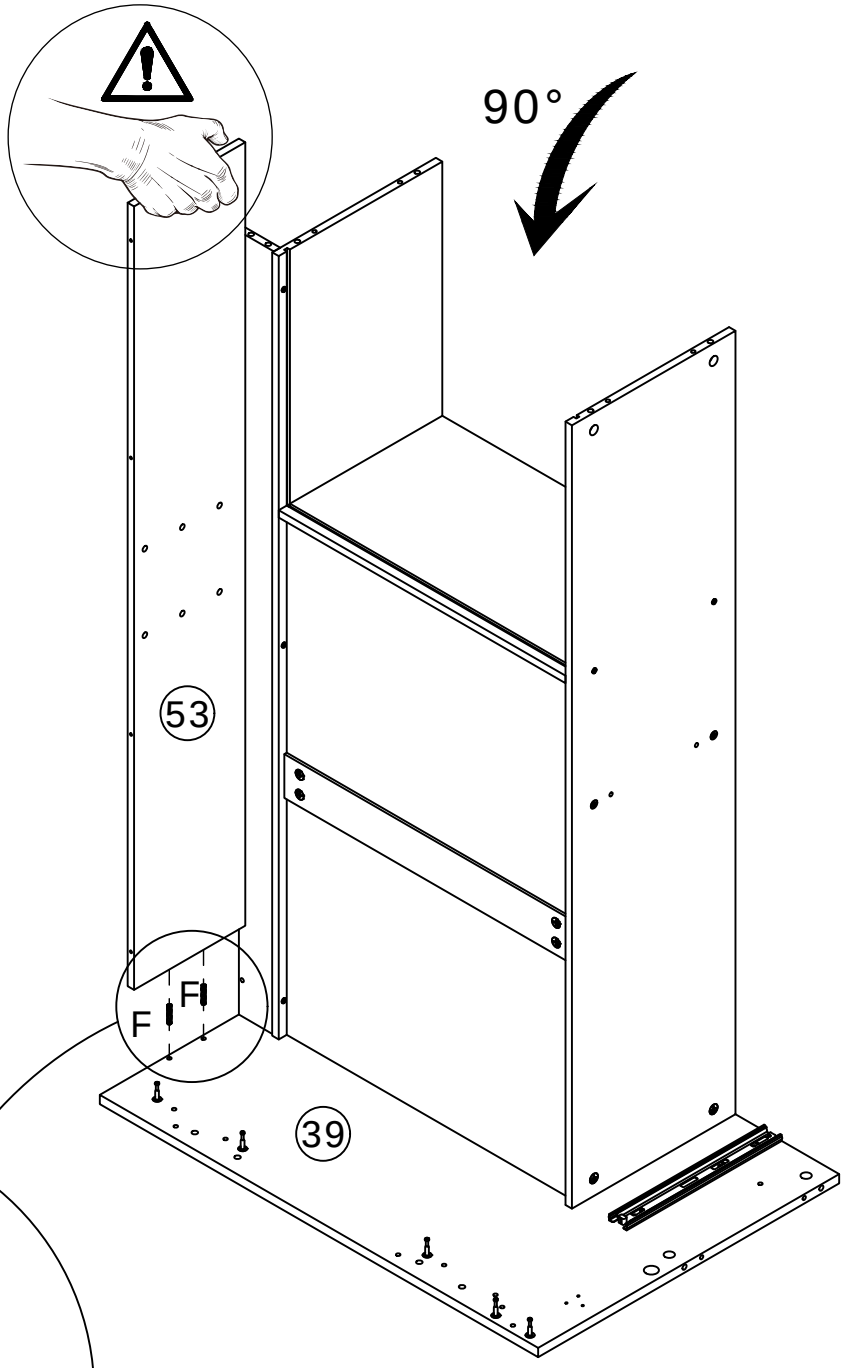

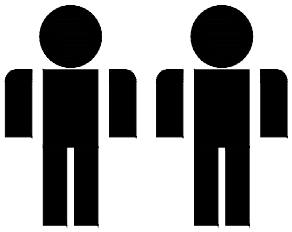

2 OF ADULTS

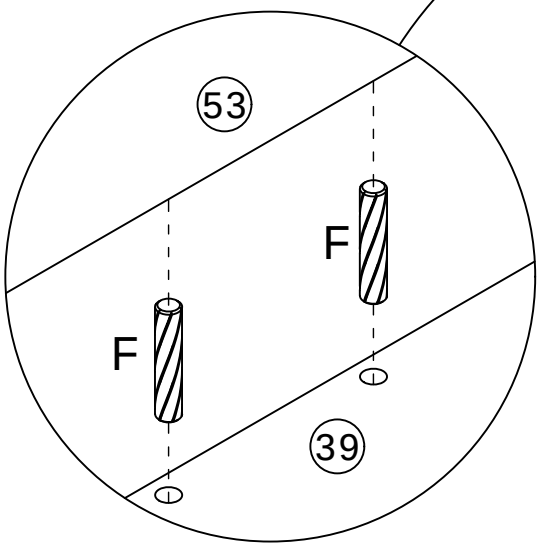

Warning: Prevent panels from tipping over.

46

E x 4

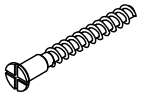

Ø 5 x 40mm

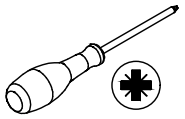

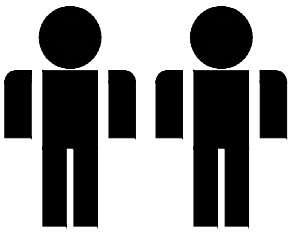

2 OF ADULTS

Warning: Prevent panels from tipping over.

47

AC x 2	70 x 1	
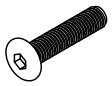	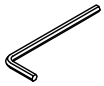	
Ø 6 x 35mm	M4	

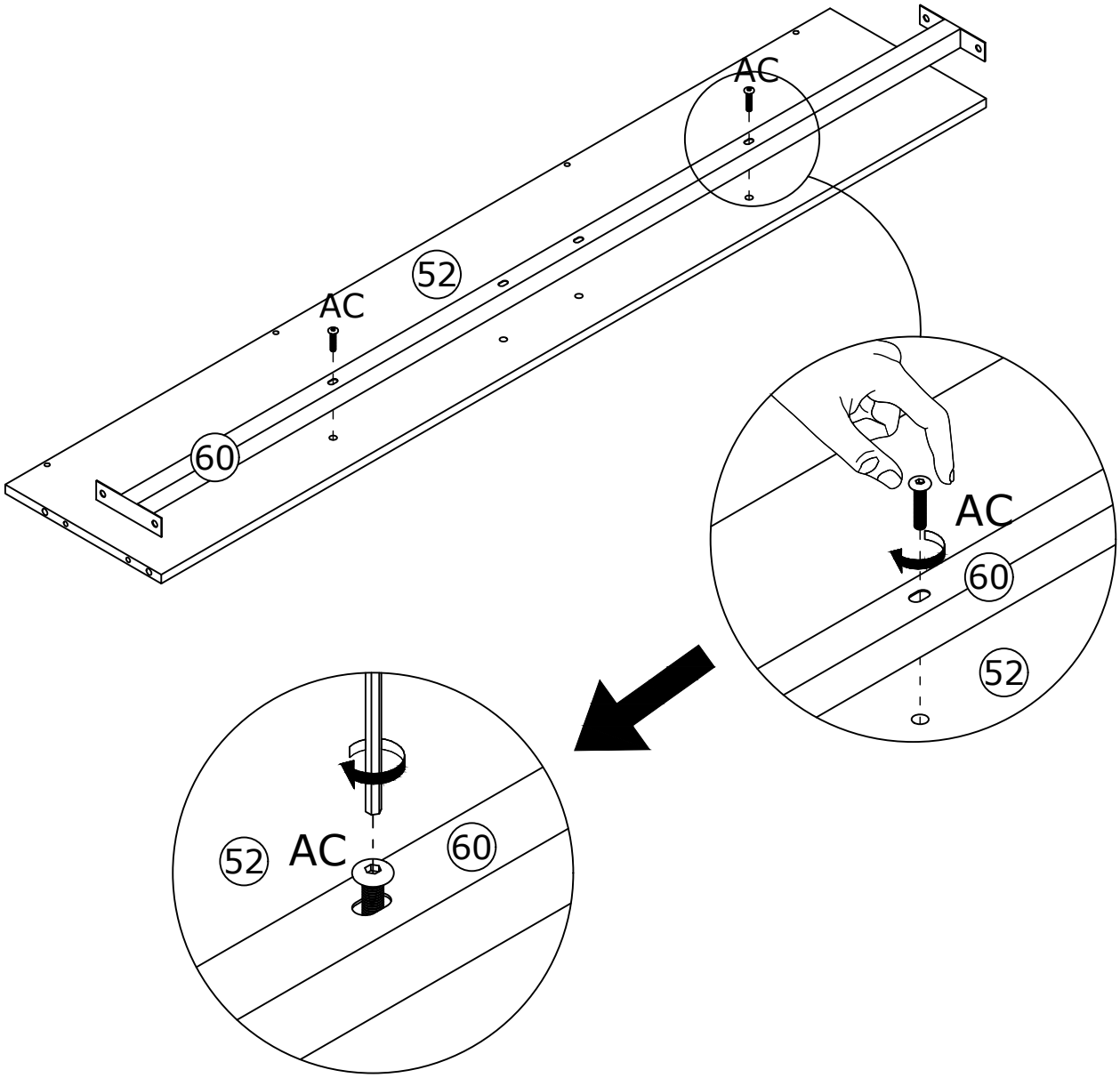

48

A x 2	F x 2	
	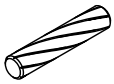	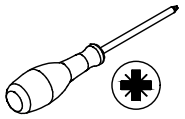
Ø 15 x 10mm	Ø 6 x 30mm	

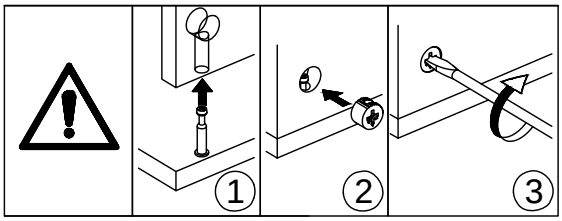

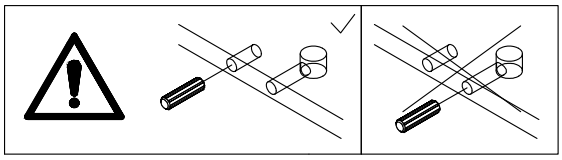

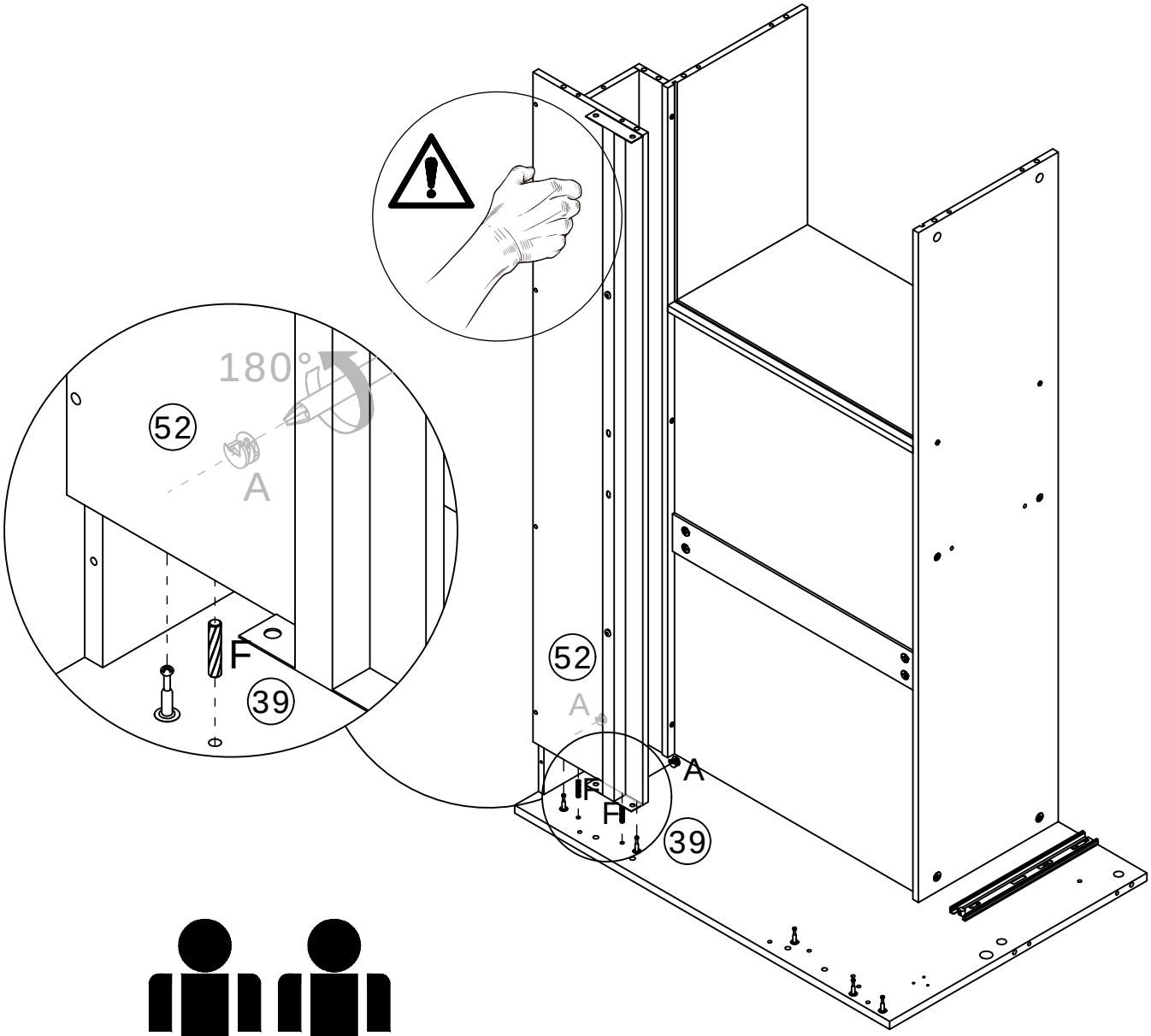

2 OF ADULTS



Warning: Prevent panels from tipping over.

49

E x 4

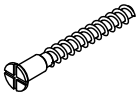

Ø 5 x 40mm

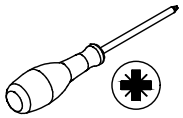

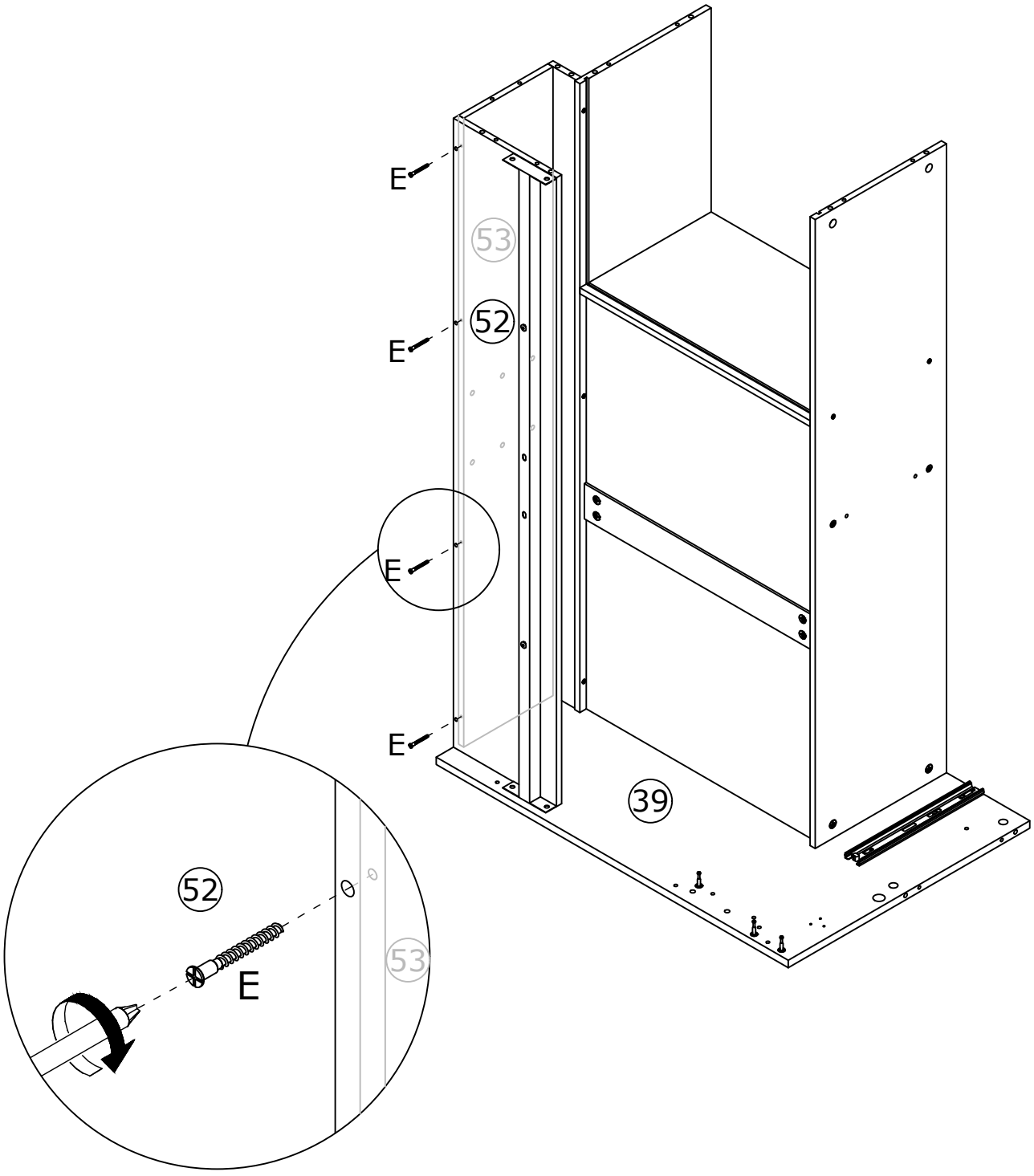

50

AB x 2	70 x 1	
	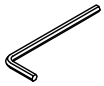	
Ø 6 x 12mm	M4	

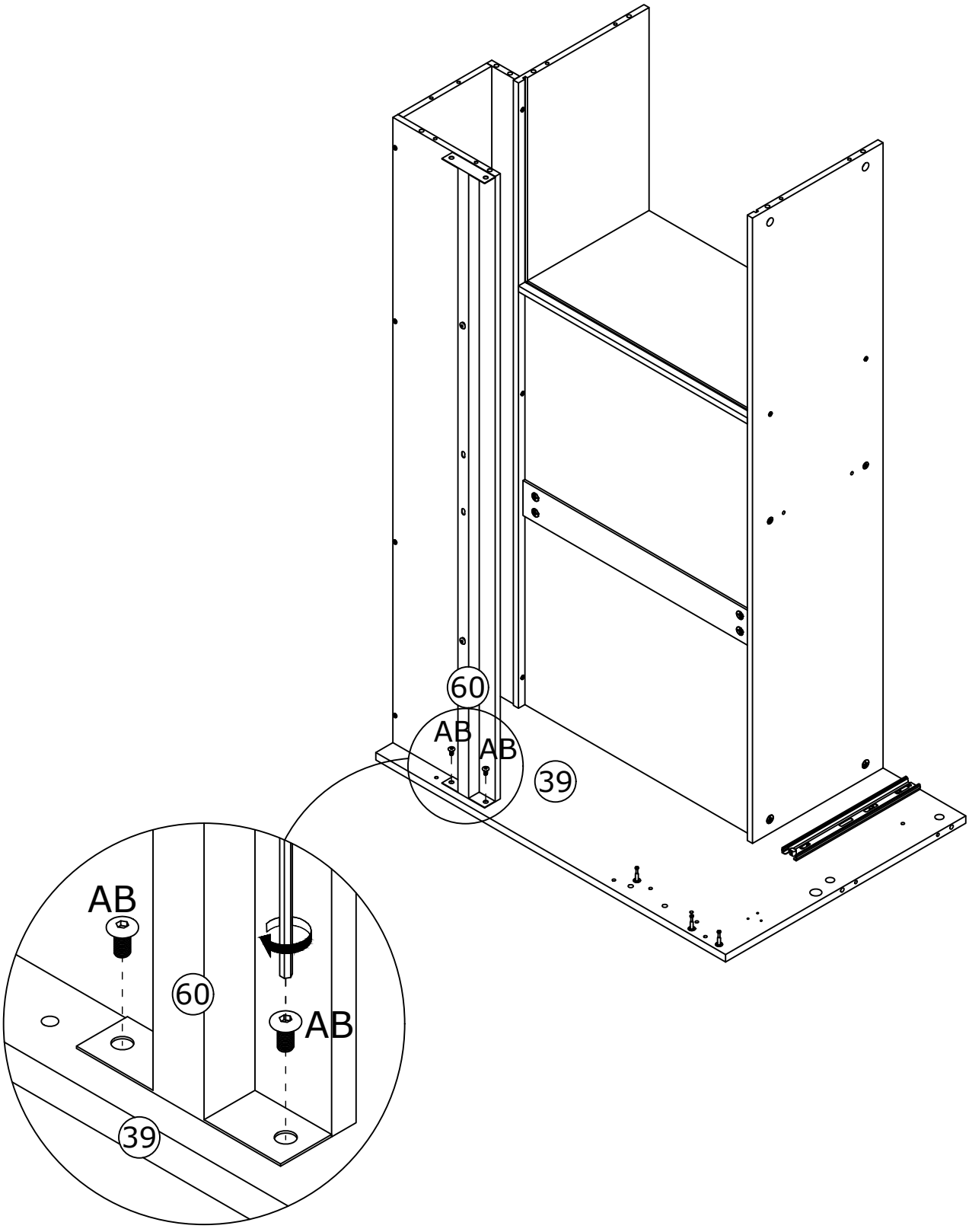

51

AC x 2	70 x 1	
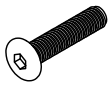	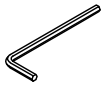	
Ø 6 x 35mm	M4	

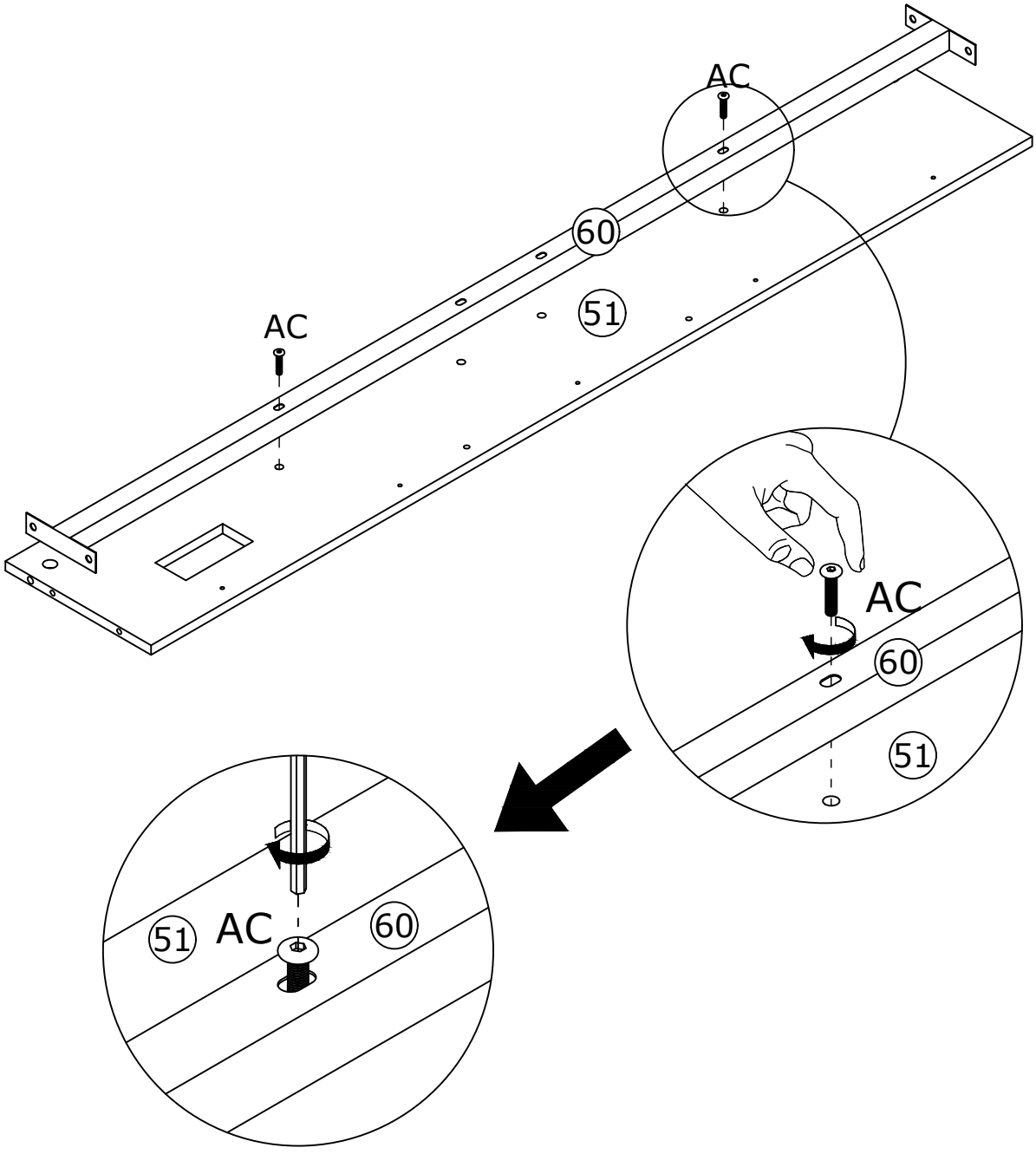

52

F x 2

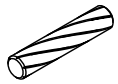

Ø 6 x 30mm

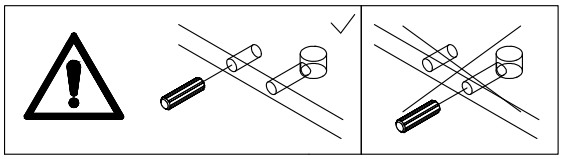

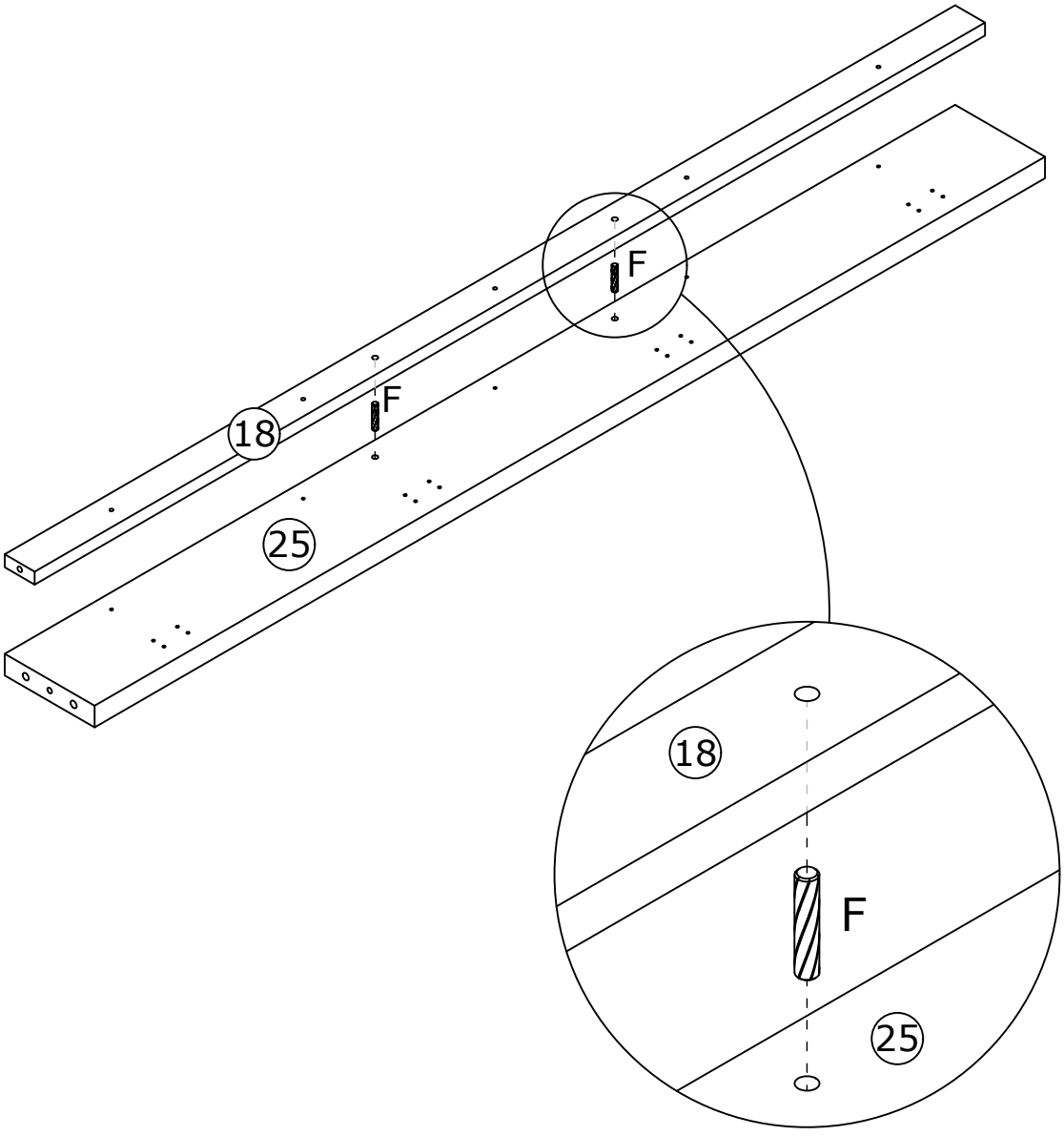

53

AF x 5

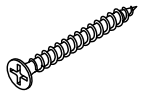

Ø 4 x 40mm

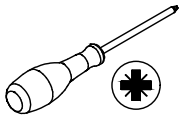



N

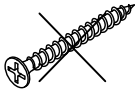

Ø3.5 x 35mm

AF

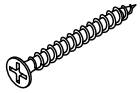

Ø4 x 40mm

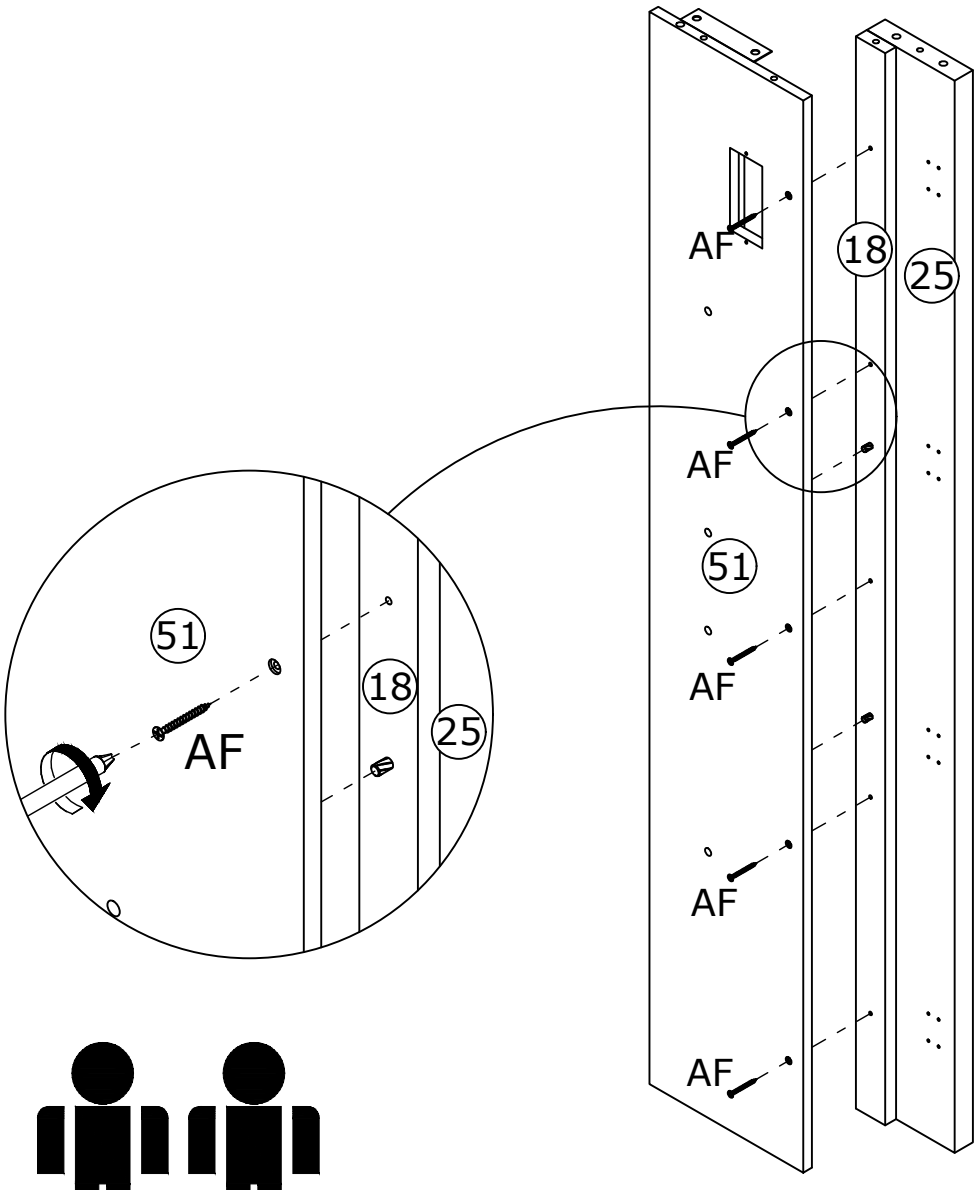

2 OF ADULTS



Warning: Prevent panels from tipping over.

54

A x 3	F x 4	
Ø 15 x 10mm	Ø 6 x 30mm	

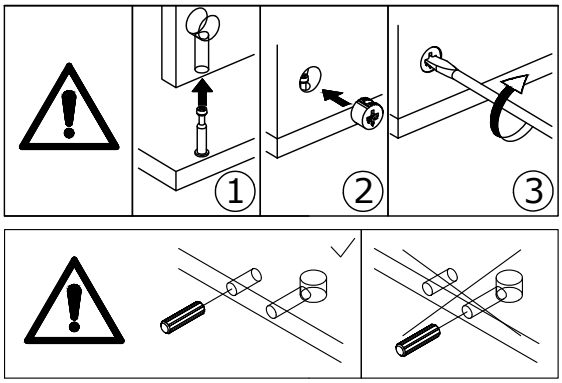

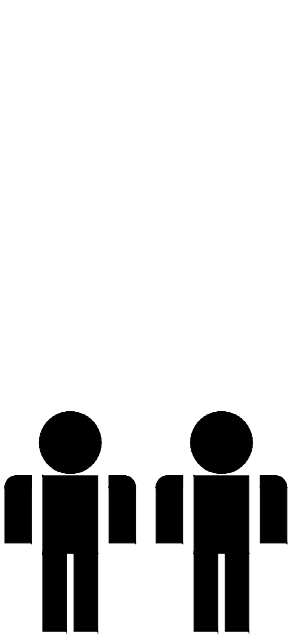

2 OF ADULTS

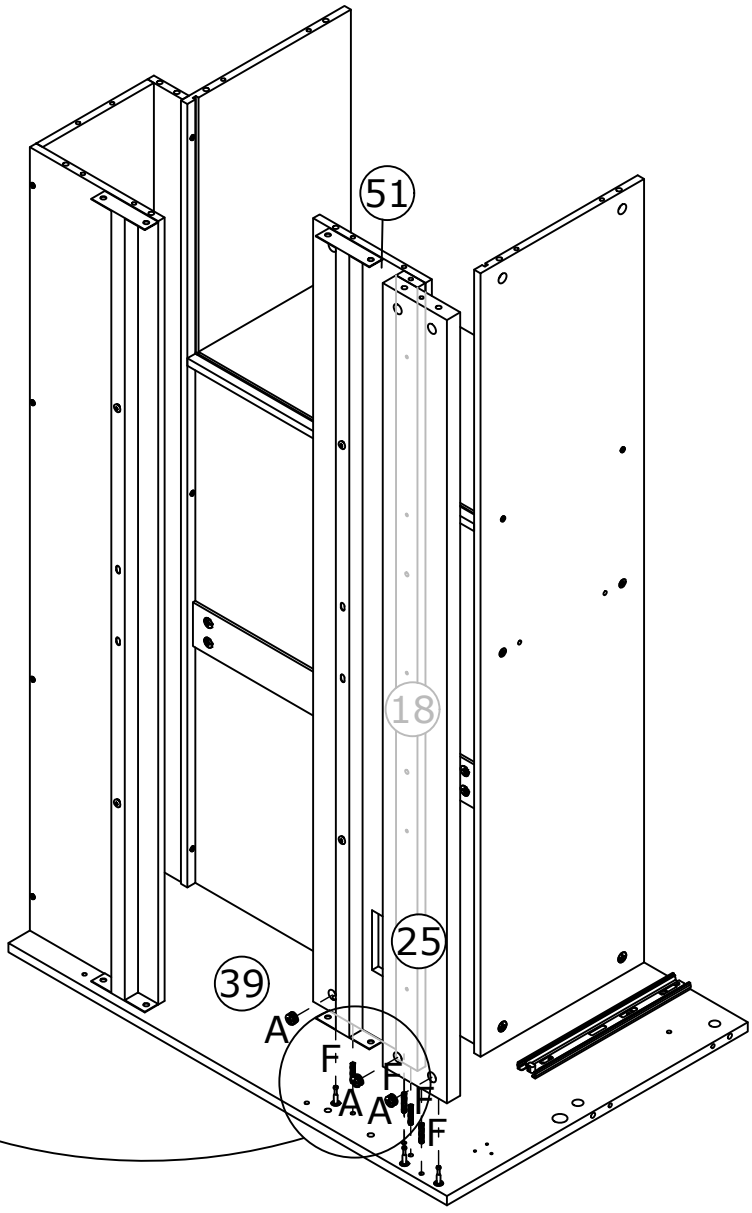

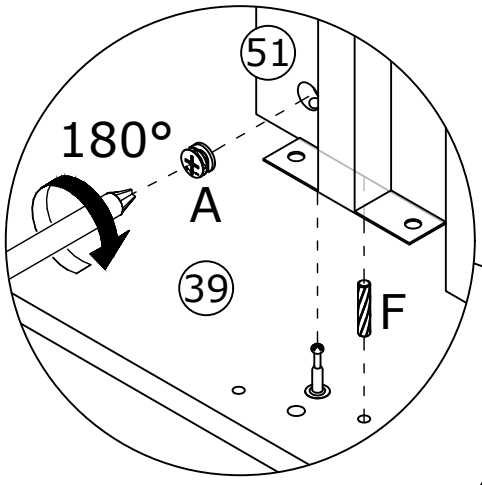

Warning: Prevent panels from tipping over.

55

AB x 2	70 x 1	
 Ø 6 x 12mm	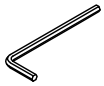 M4	

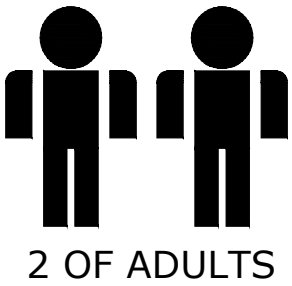

2 OF ADULTS

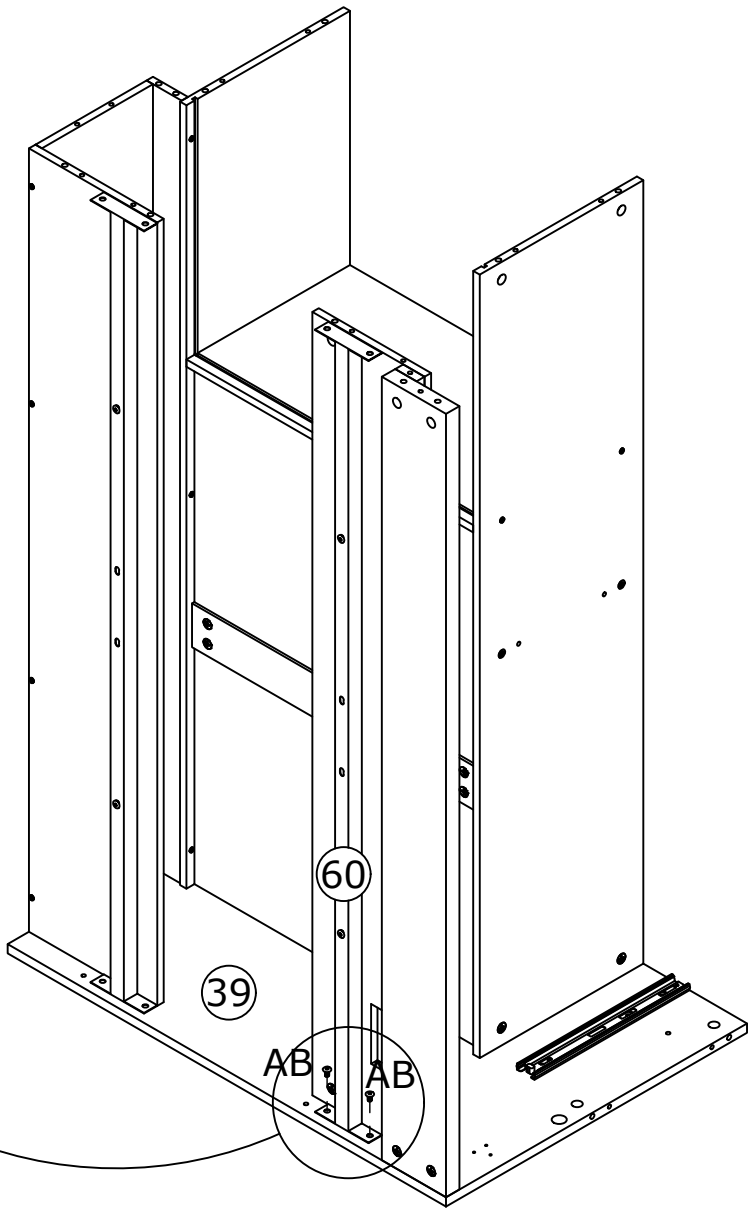

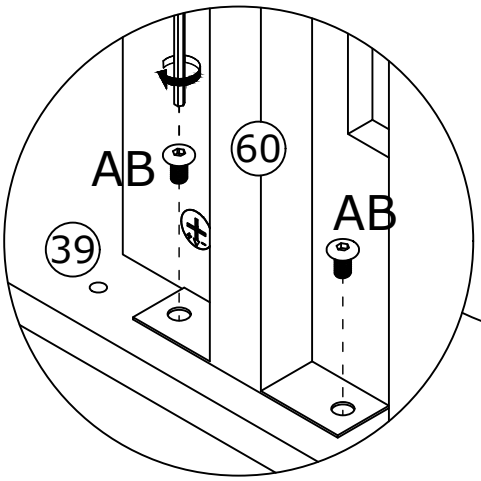



Warning: Prevent panels from tipping over.

56

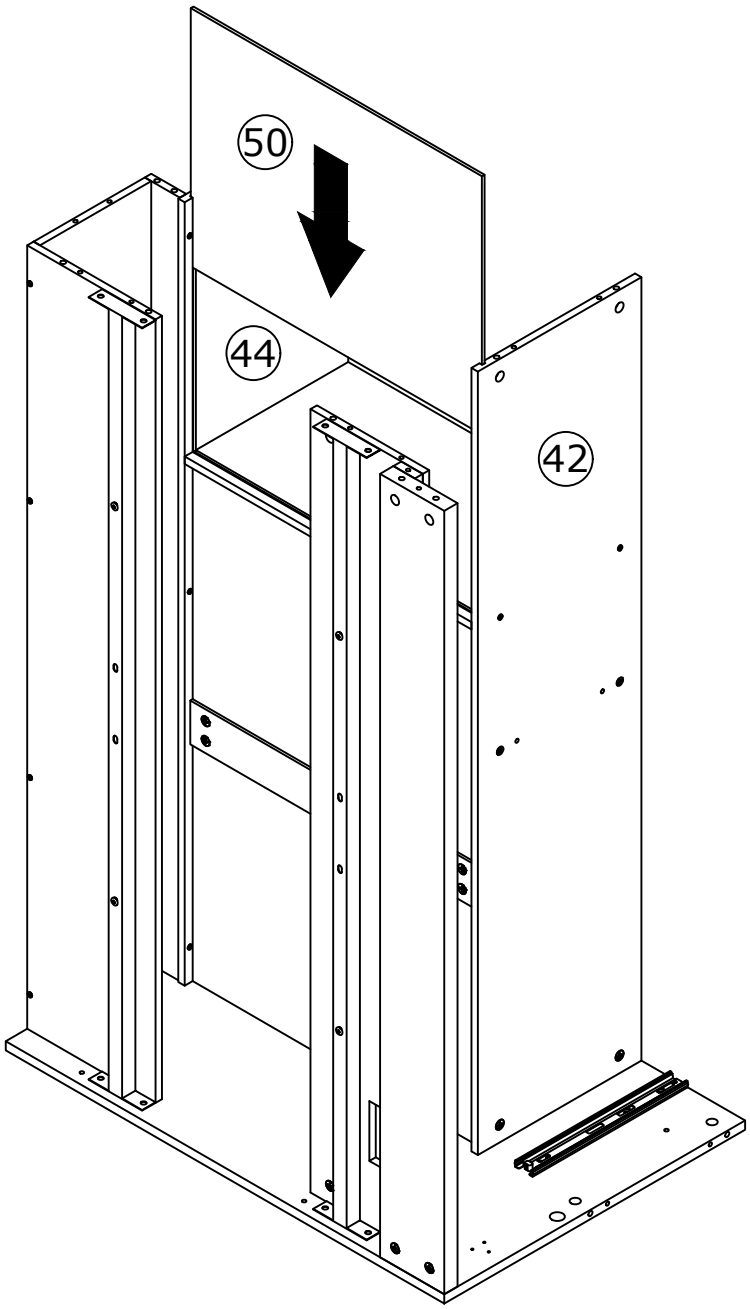

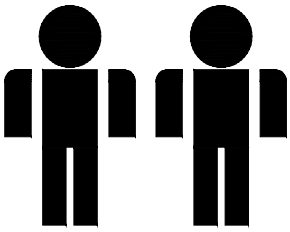

2 OF ADULTS

Warning: Prevent panels from tipping over.

57

F x 12

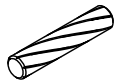

Ø 6 x 30mm

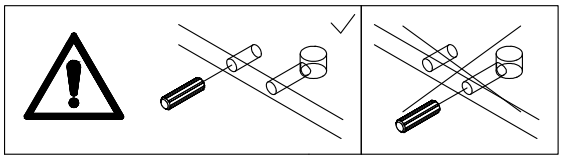

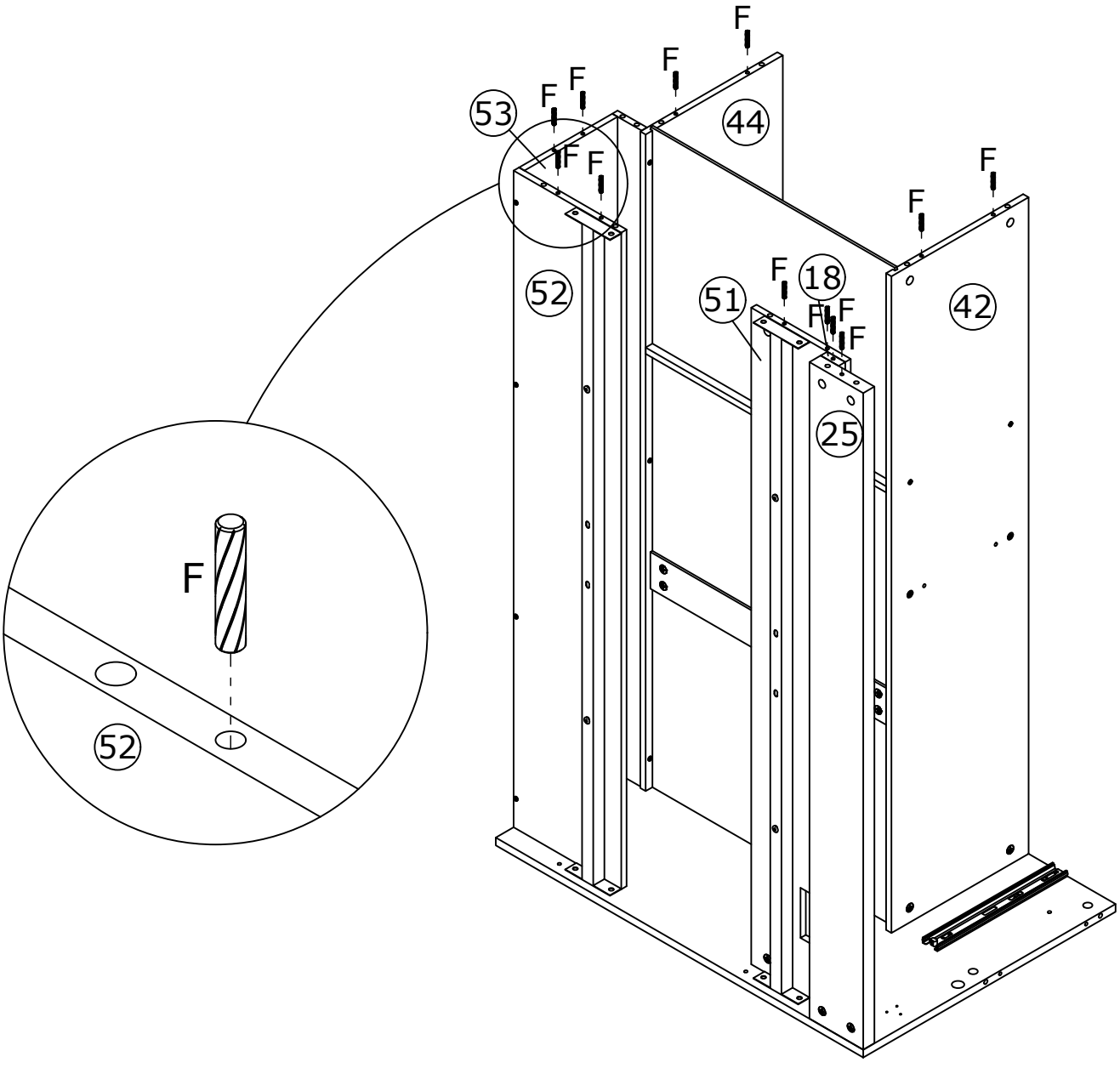

Warning: Prevent panels from tipping over.

58

B x 11	C x 11	
	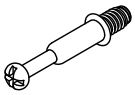 Ø 6 x 35mm	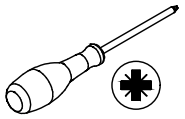

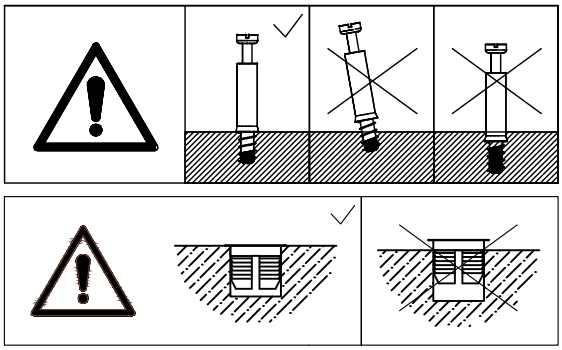

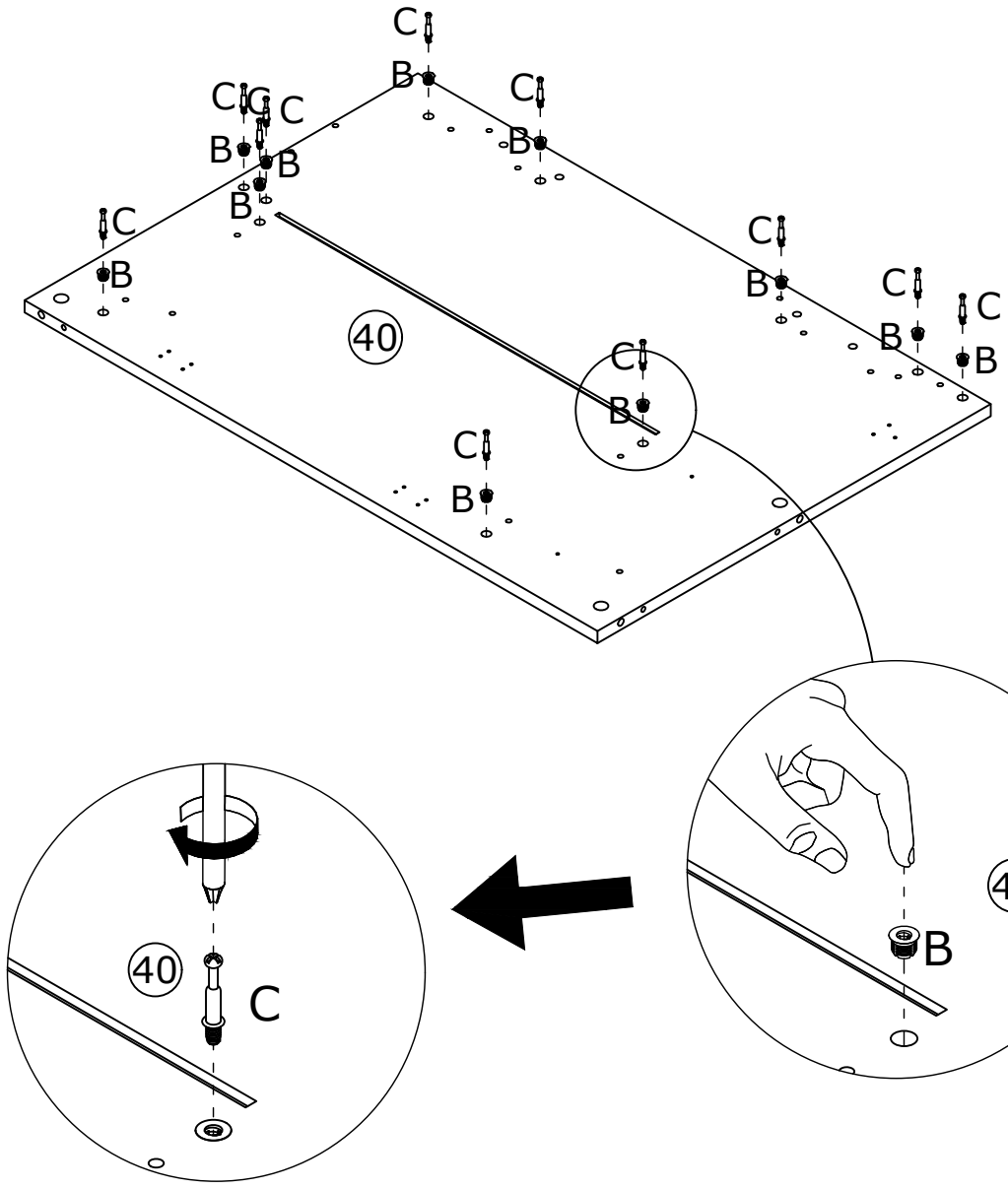

59

U x 2	W x 1	
	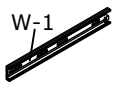	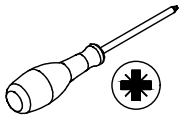
Ø 3.5 x 12mm	300mm	



U



Ø3.5 x 12mm

V



Ø3.5 x 14mm

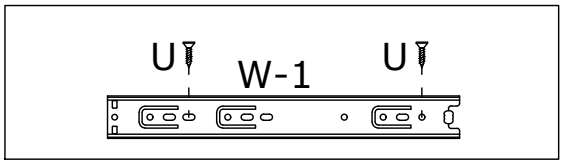

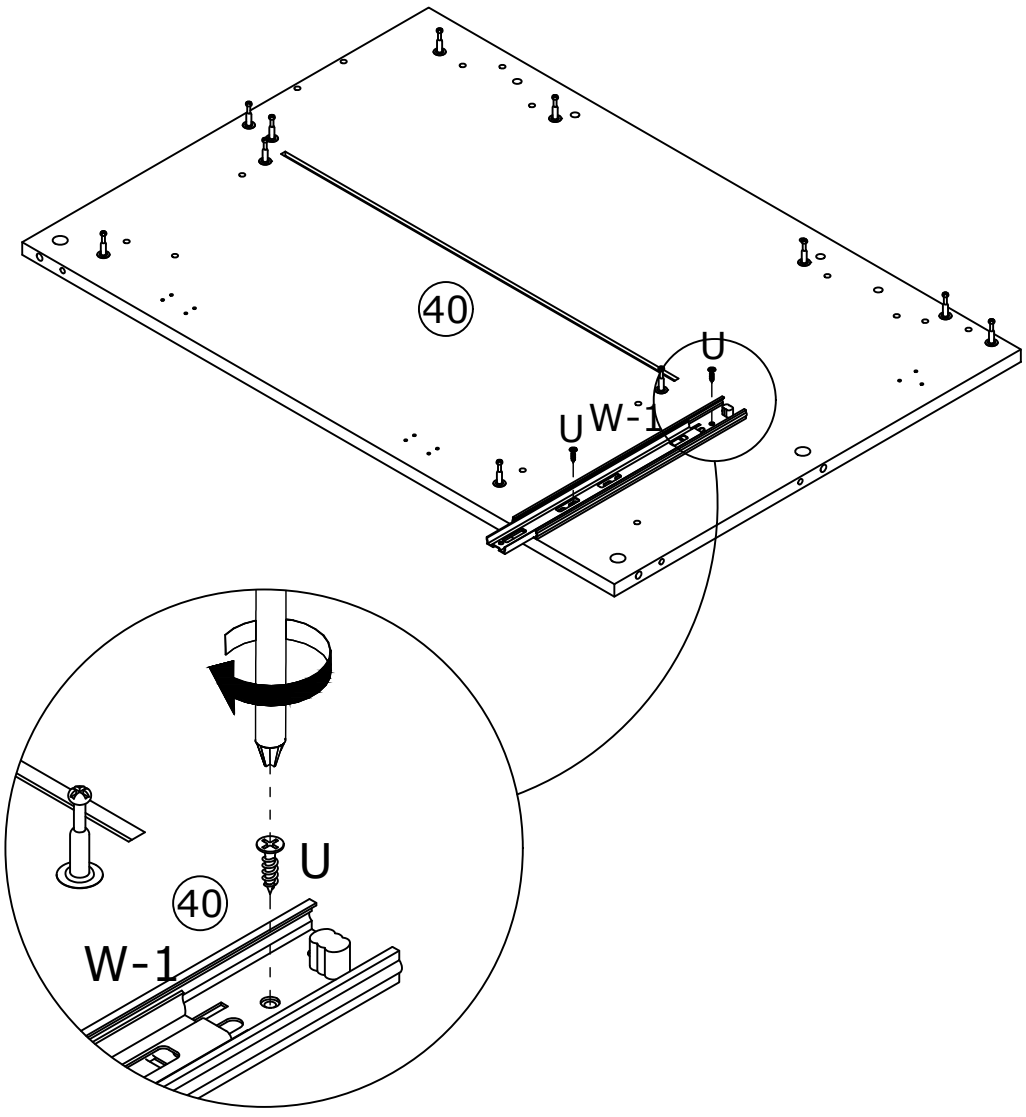

60

A x 11



Ø 15 x 10mm

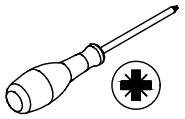

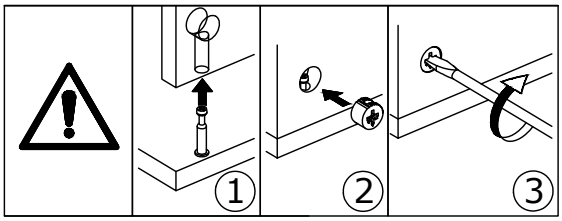

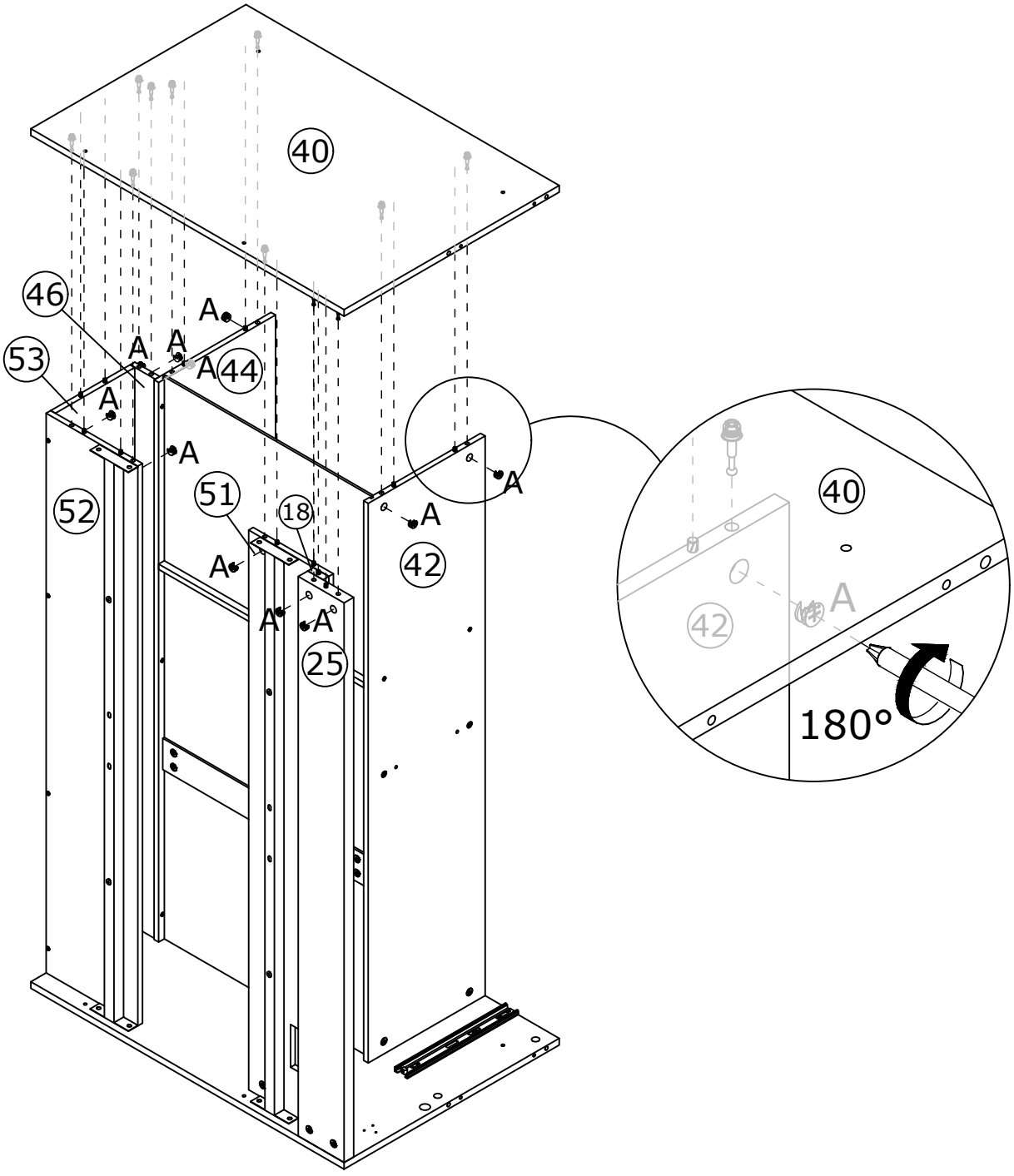

61

AB x 4	70 x 1	
	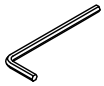	
Ø 6 x 12mm	M4	

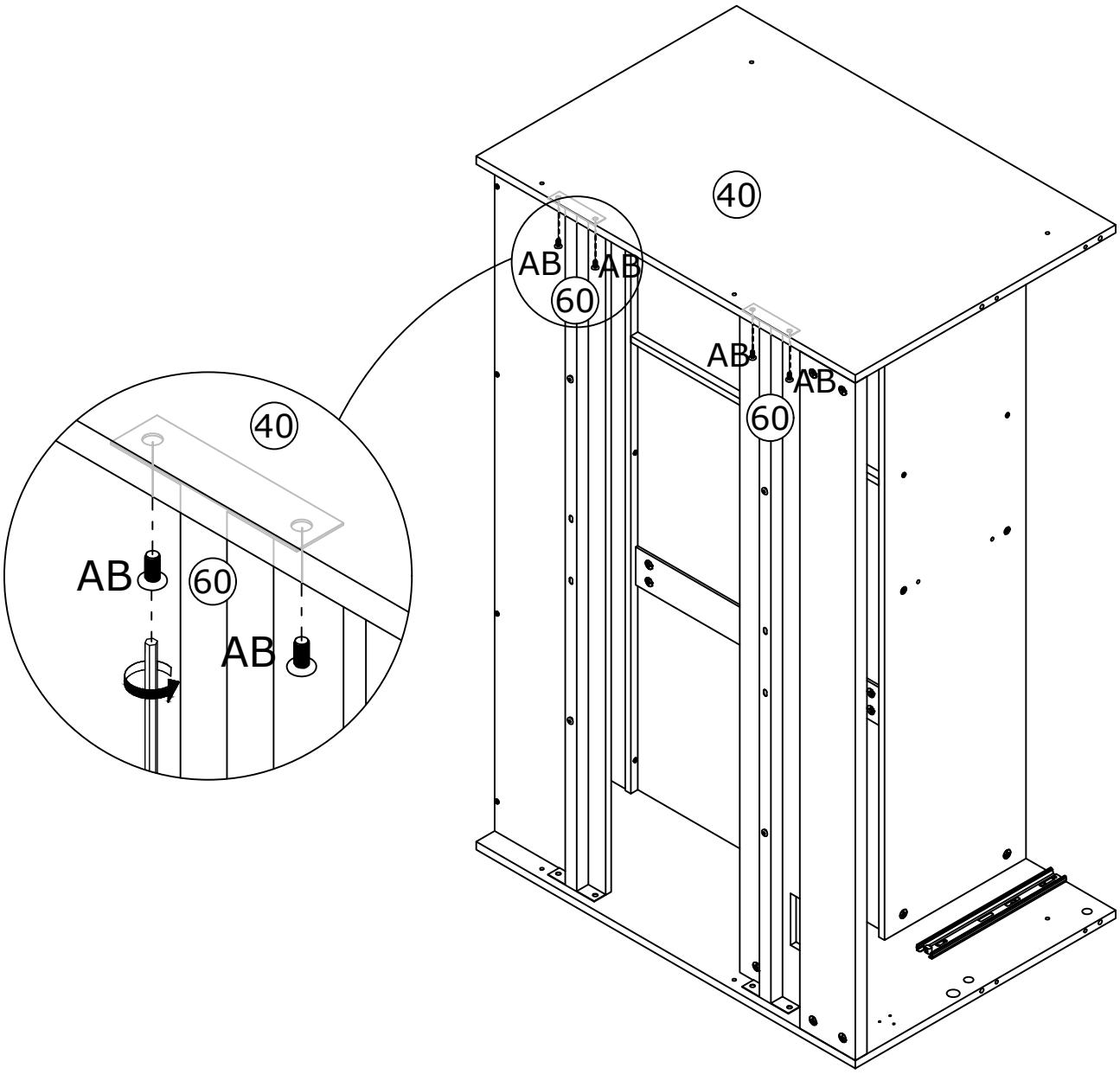

62

F x 4

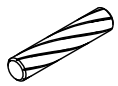

Ø 6 x 30mm

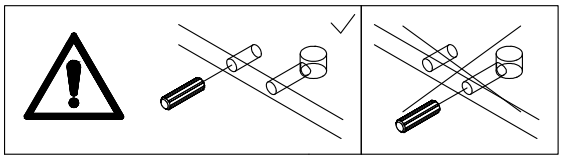

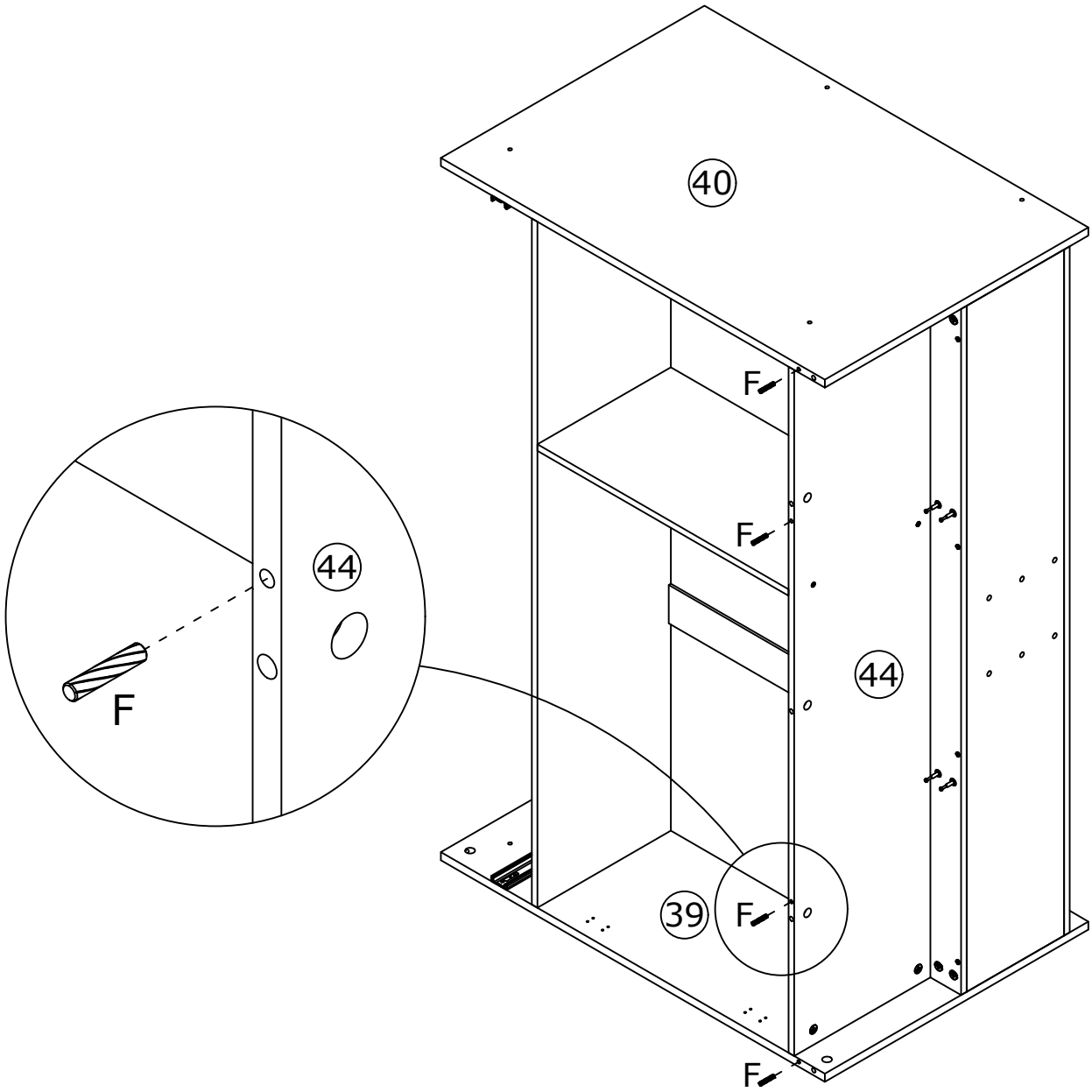

63

A x 4	B x 9	C x 9	
Ø 15 x 10mm		Ø 6 x 35mm	

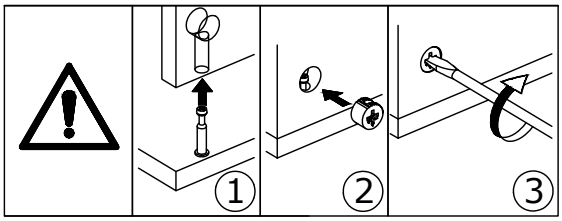

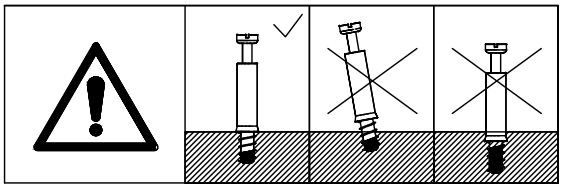

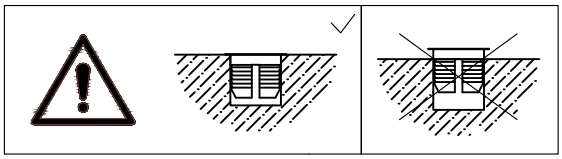

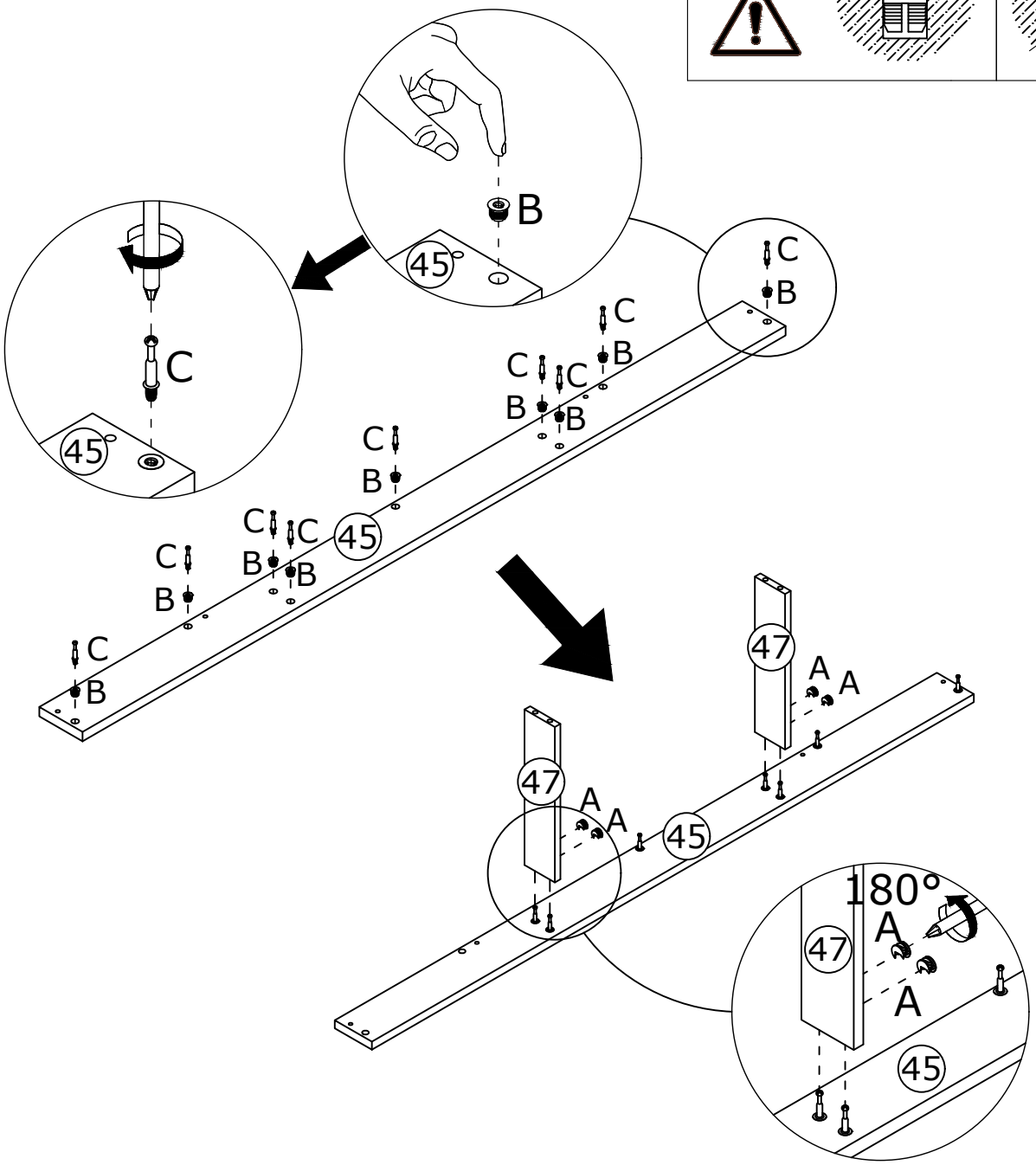

64

A x 9



Ø 15 x 10mm

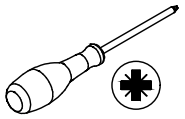

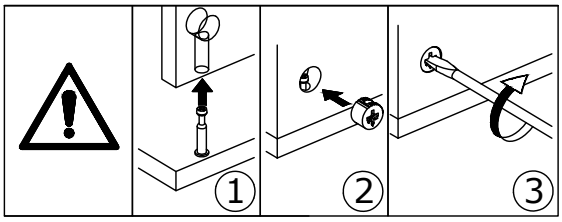

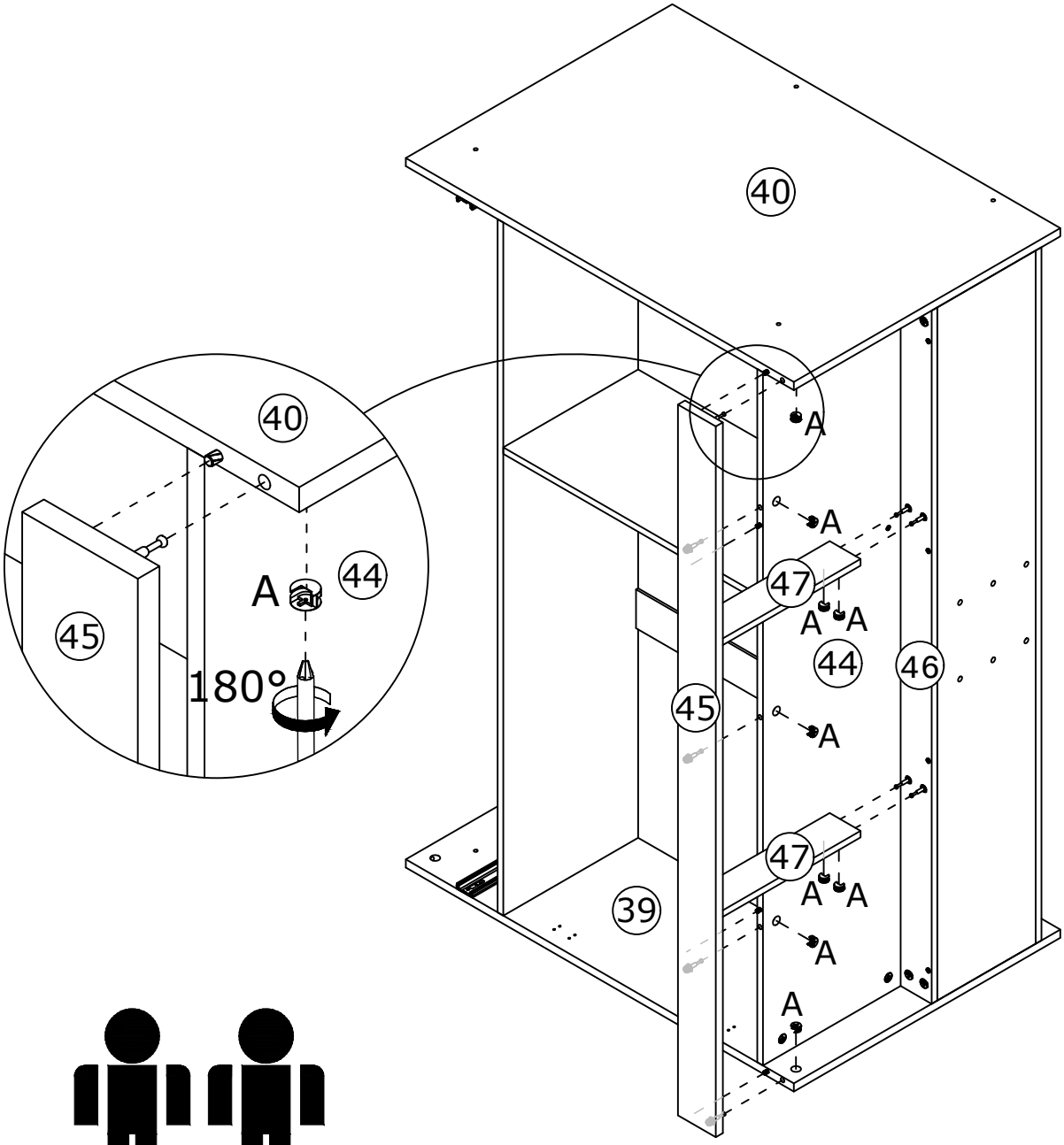

2 OF ADULTS

Avoid tilting Panel 47 to prevent cracks around the holes.

65

66 x 4	70 x 1	
 Ø 6 x 10mm	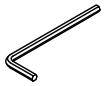 M4	

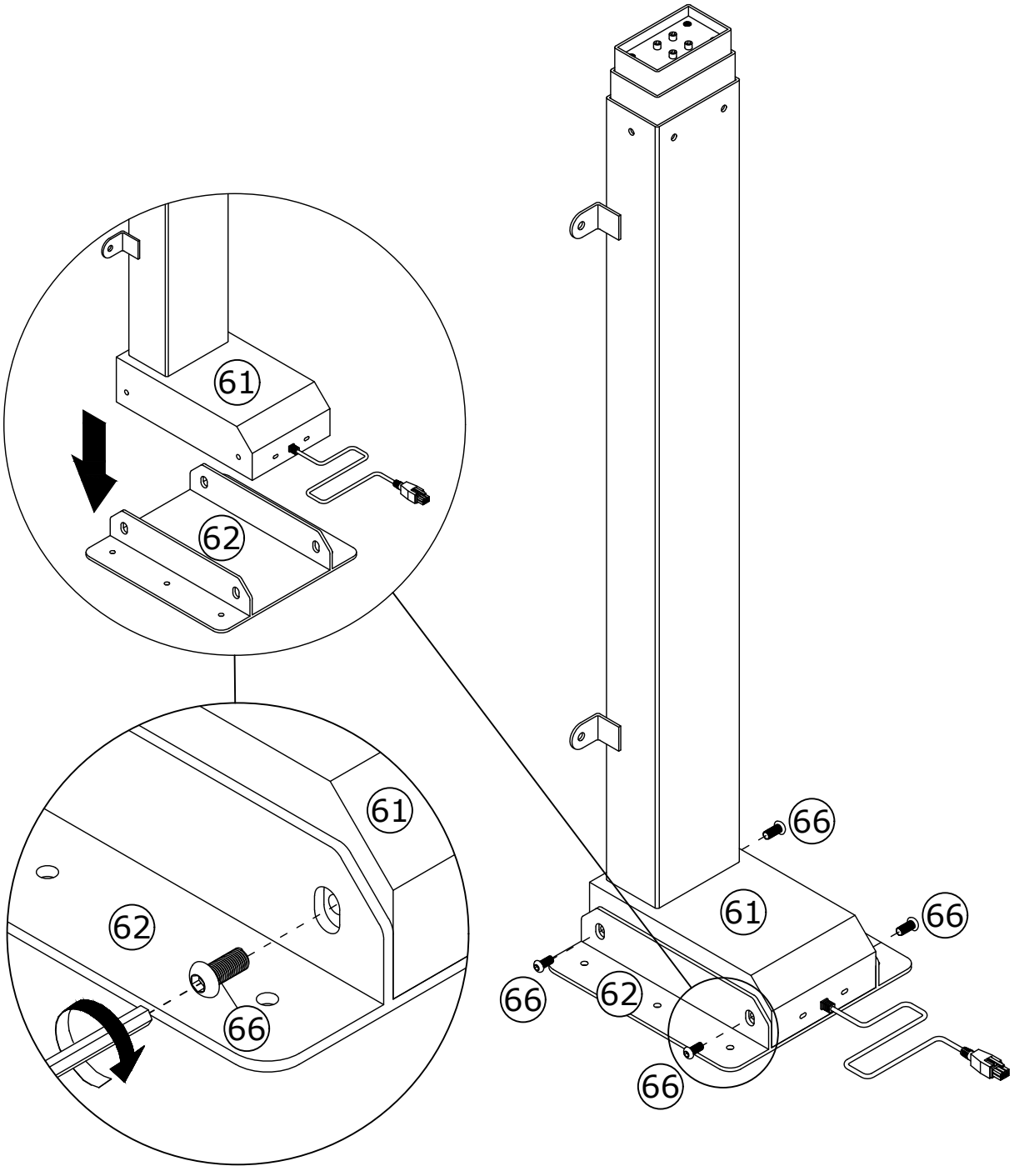

66

AB x 6	70 x 1	
 Ø 6 x 12mm	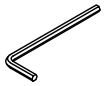 M4	

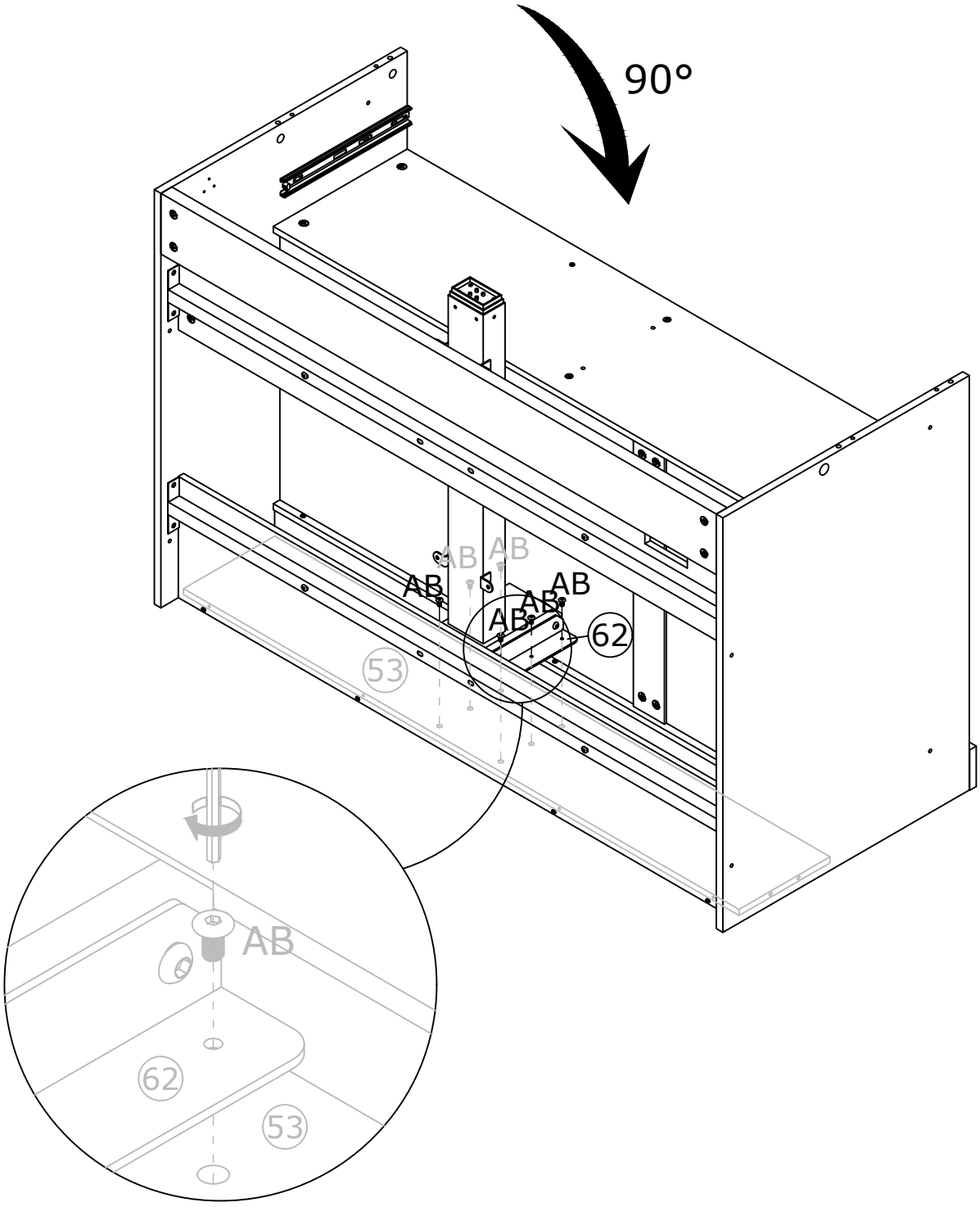

67

AD x 4	AE x 4	AG x 1	(70) x 1	
Ø 6 x 45mm	M6	M6	M4	

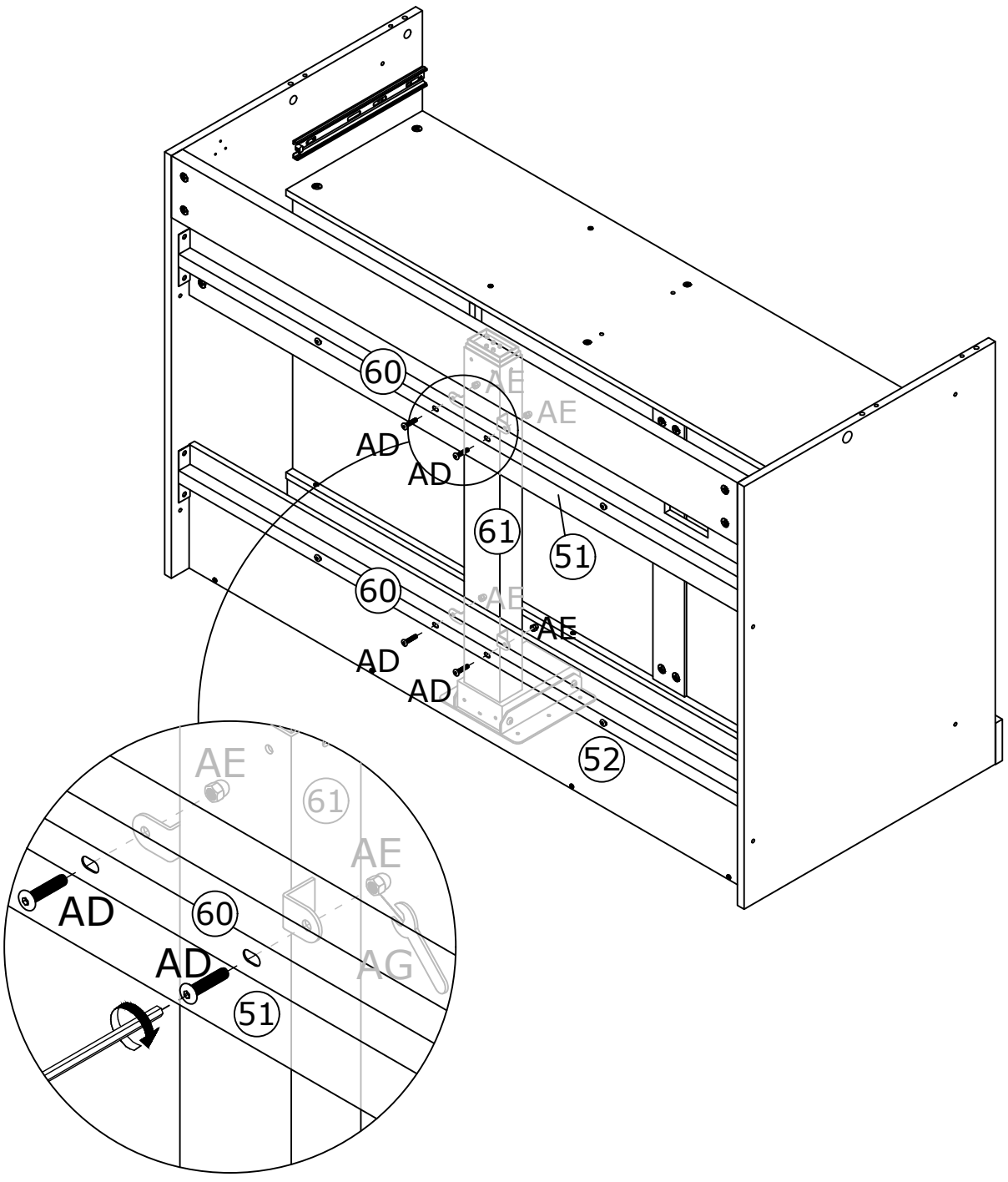

68

L x 1	U x 2	
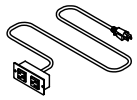	 Ø 3.5 x 12mm	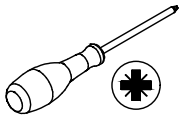



U	V
 Ø3.5 x 12mm	 Ø3.5 x 14mm

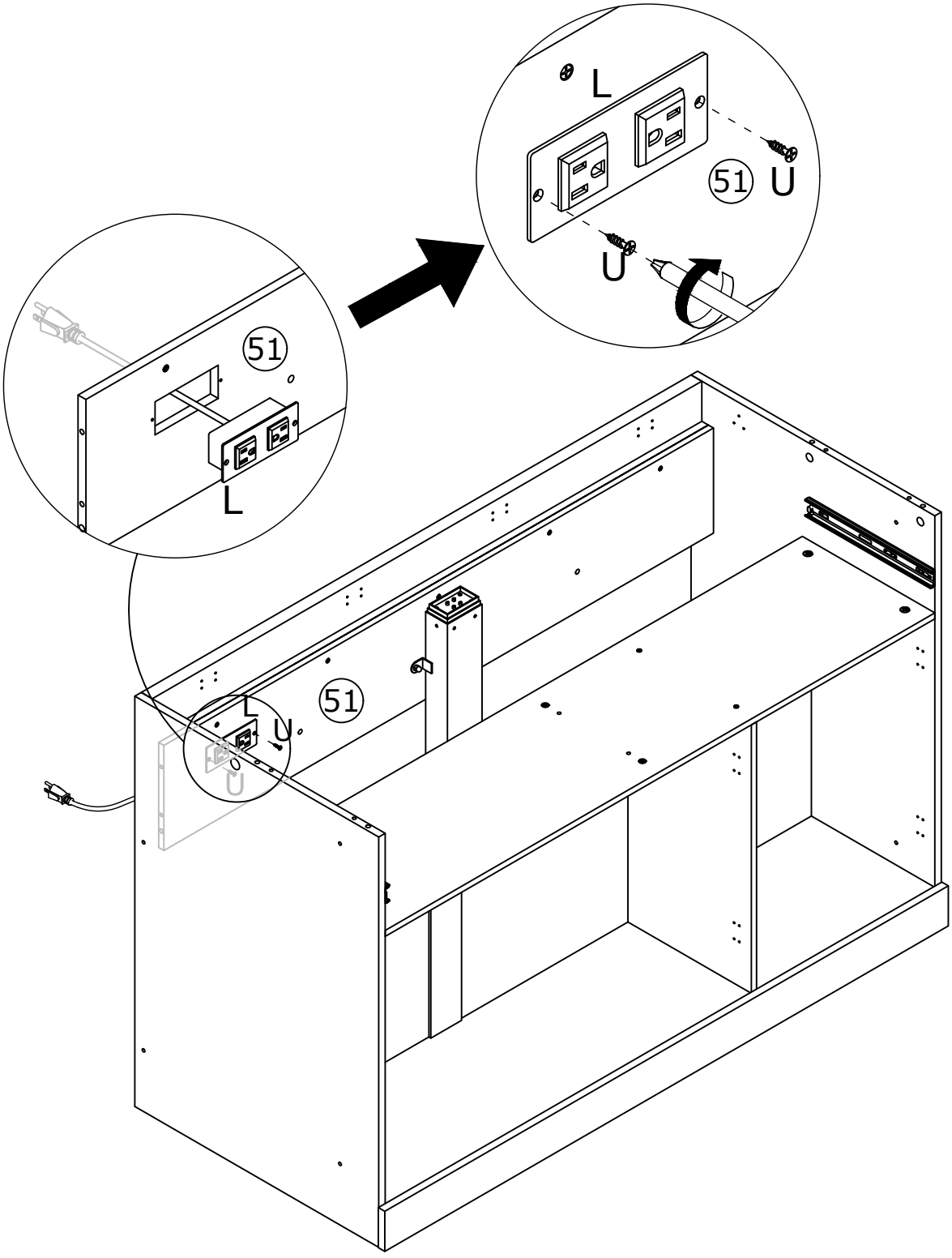

69

C x 2

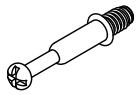

Ø 6 x 35mm

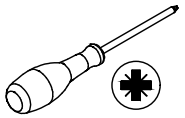

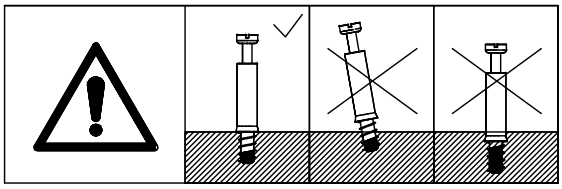

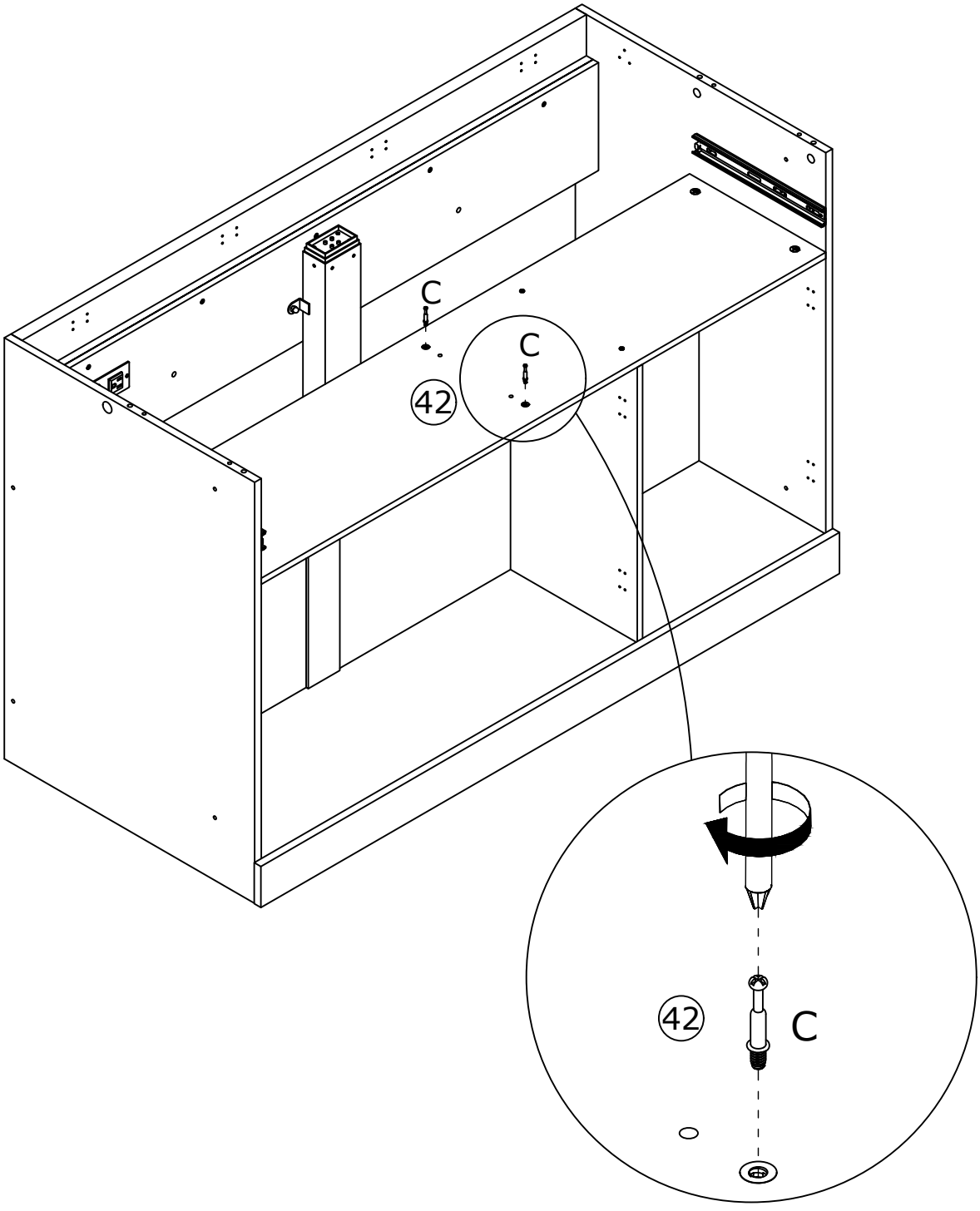

70

U x 4	W x 1	
	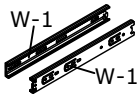	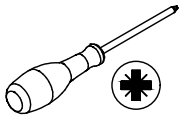
Ø 3.5 x 12mm	300mm	

	U	V
		
	Ø3.5 x 12mm	Ø3.5 x 14mm

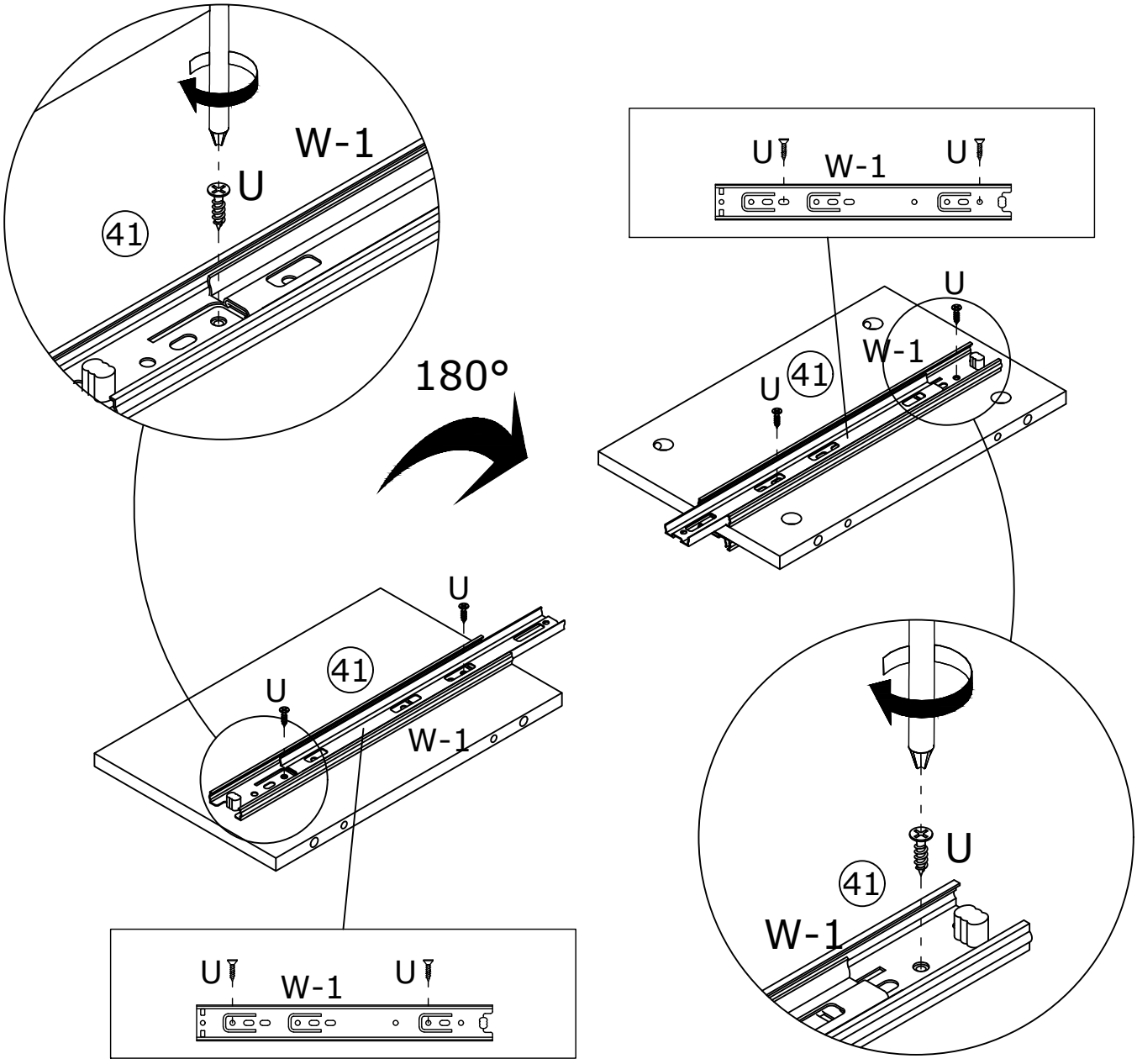

71

A x 2	F x 2	
Ø 15 x 10mm	Ø 6 x 30mm	

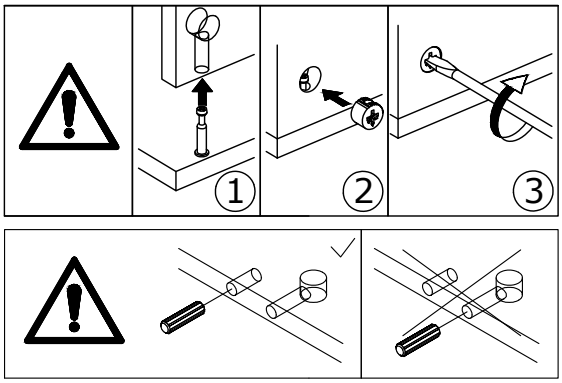

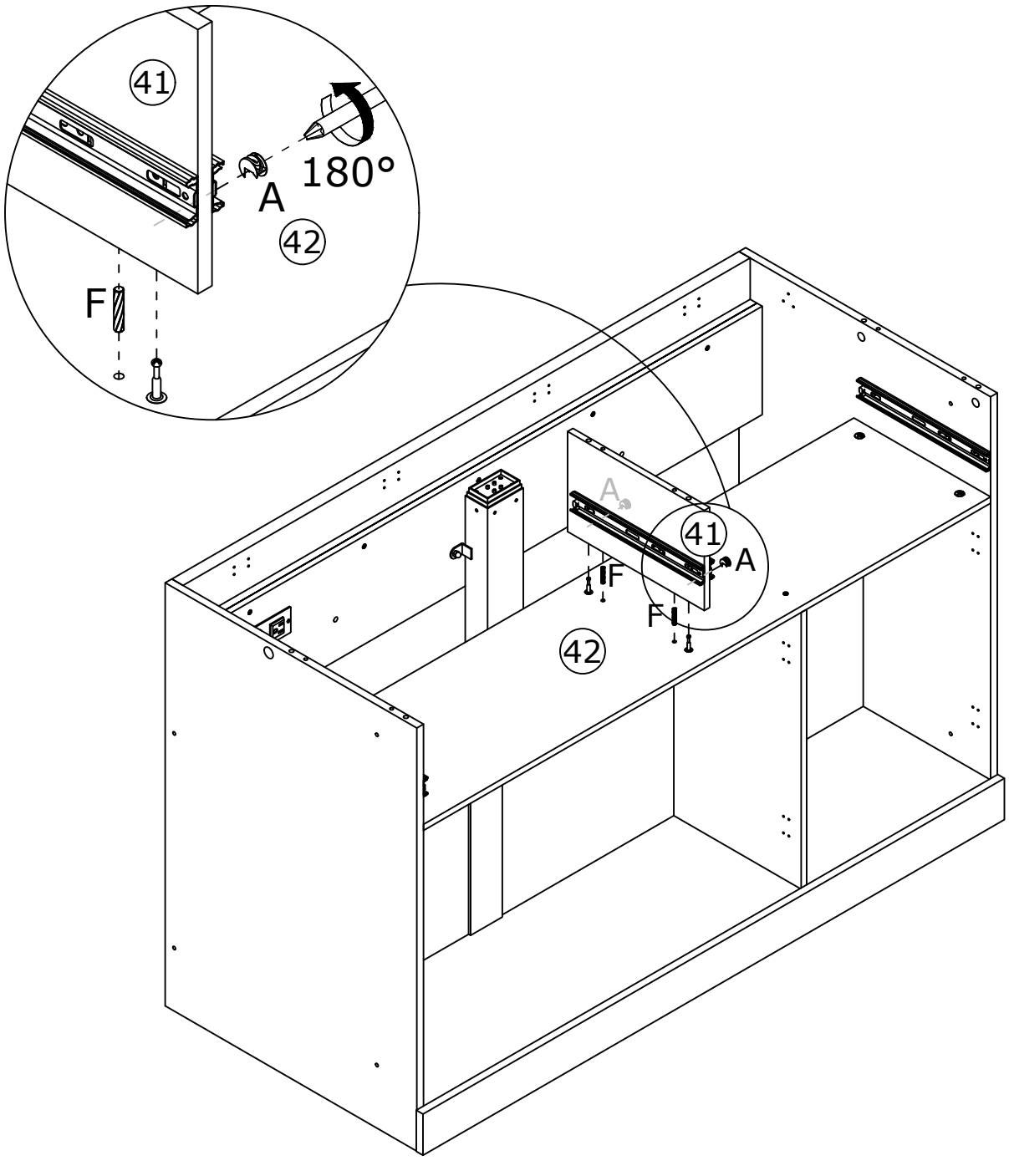

72

F x 6

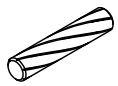

Ø 6 x 30mm

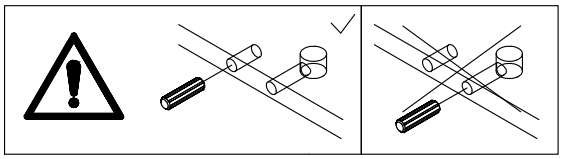

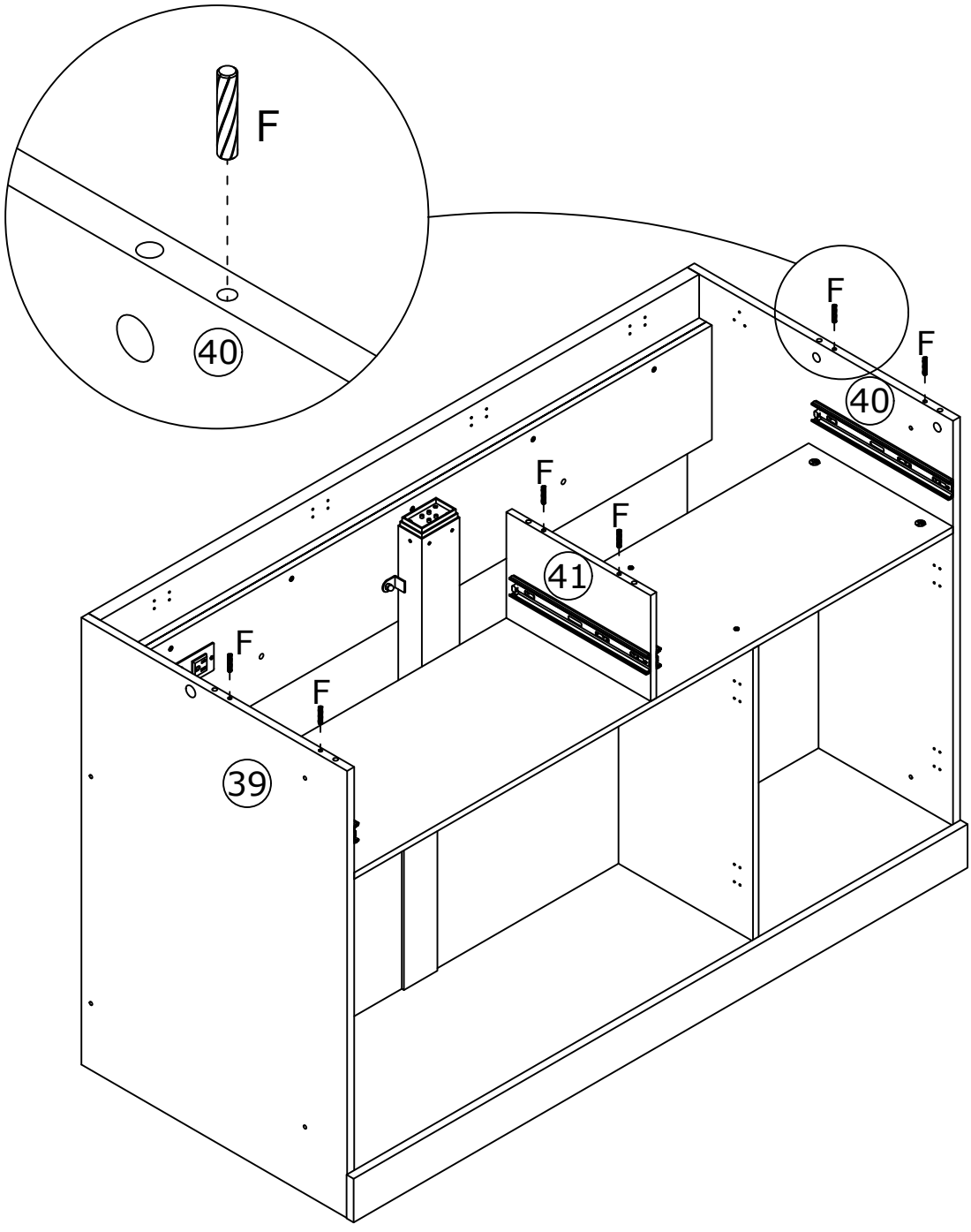

73

B x 6	C x 6	
	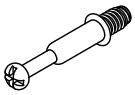 Ø 6 x 35mm	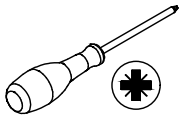

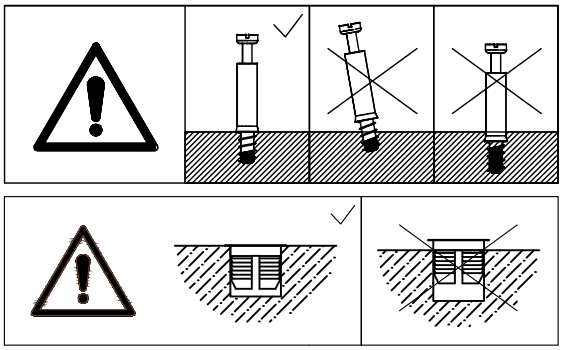

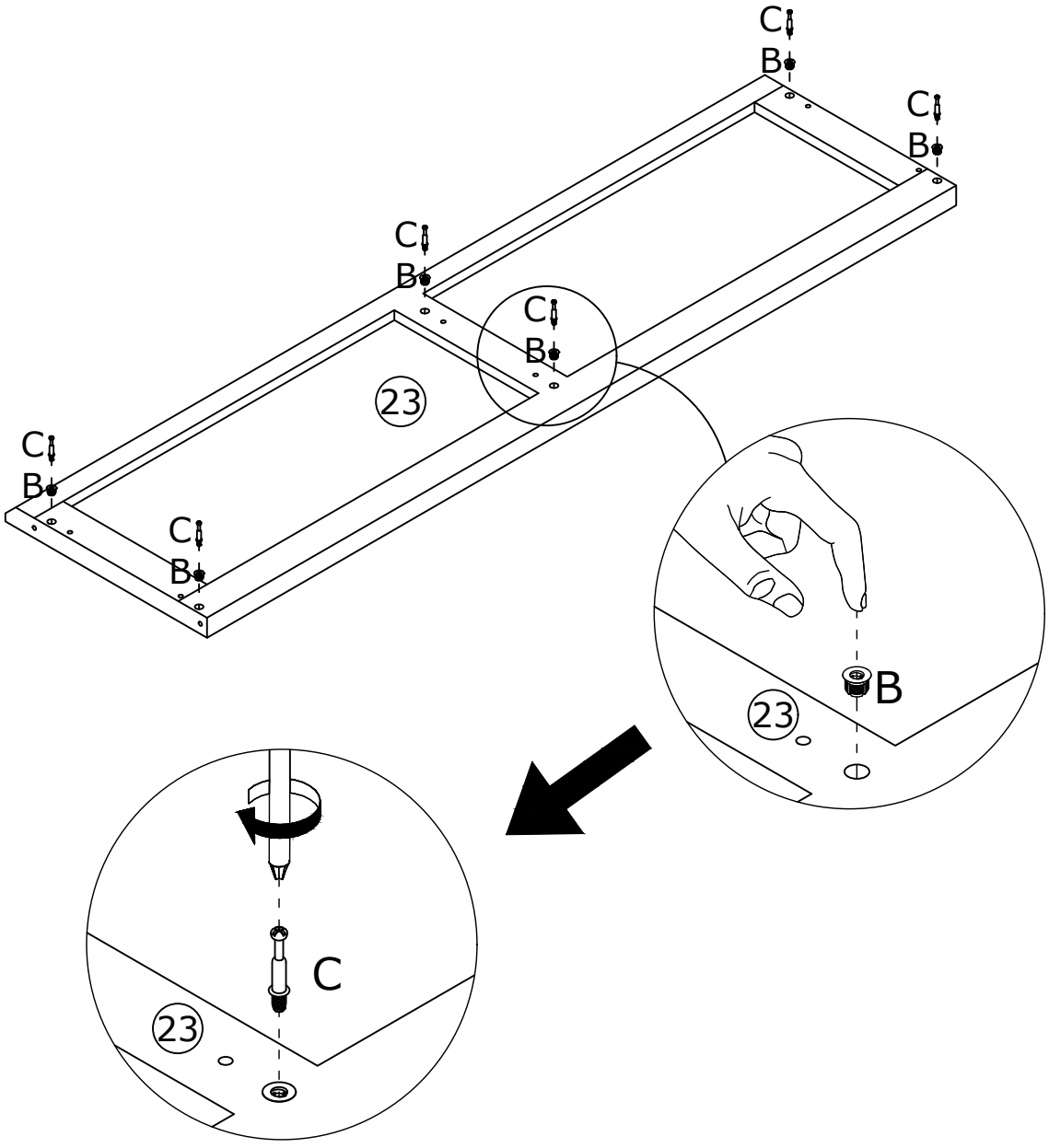

74

A x 6



Ø 15 x 10mm

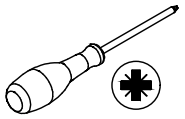

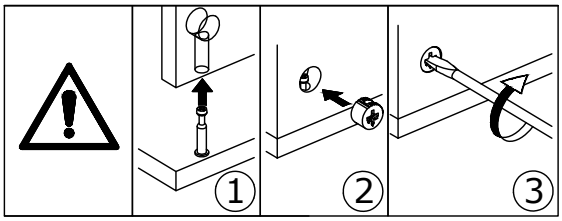

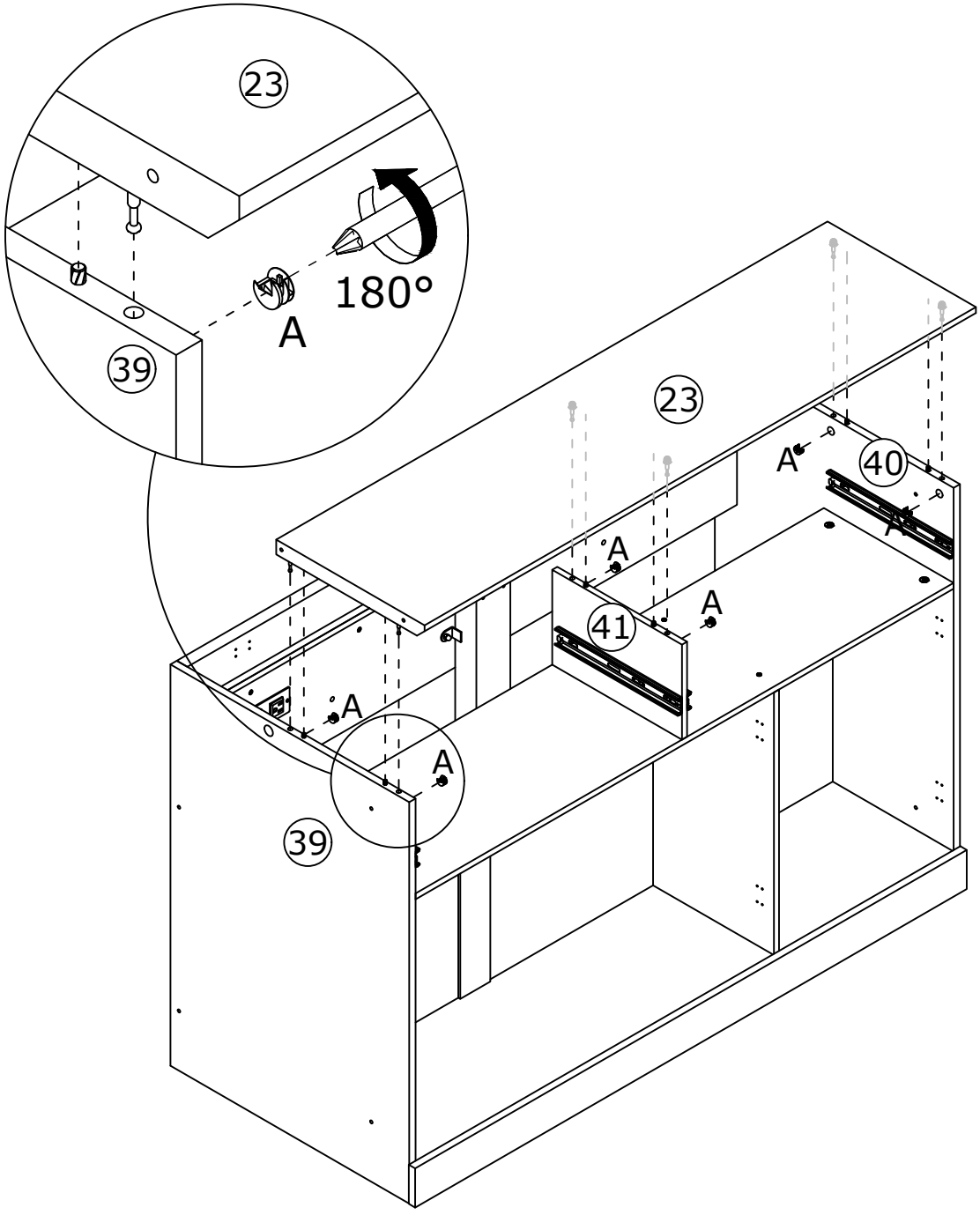

75

F x 2

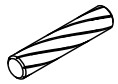

Ø 6 x 30mm

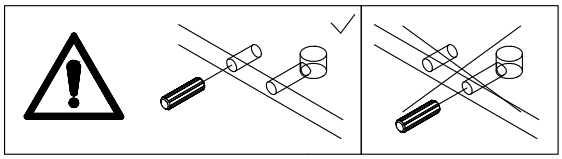

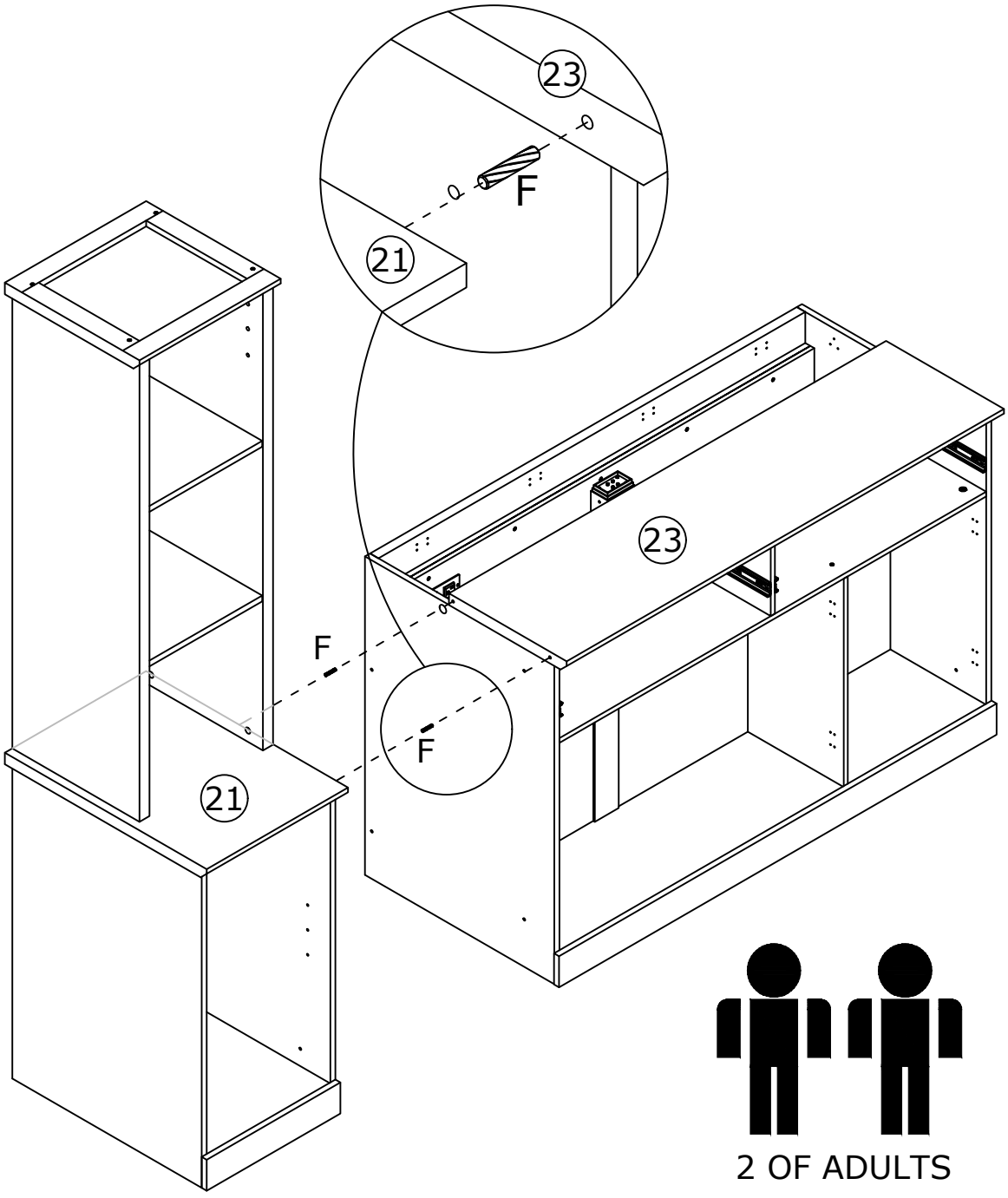

2 OF ADULTS

76

Z x 4

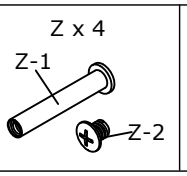

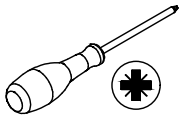

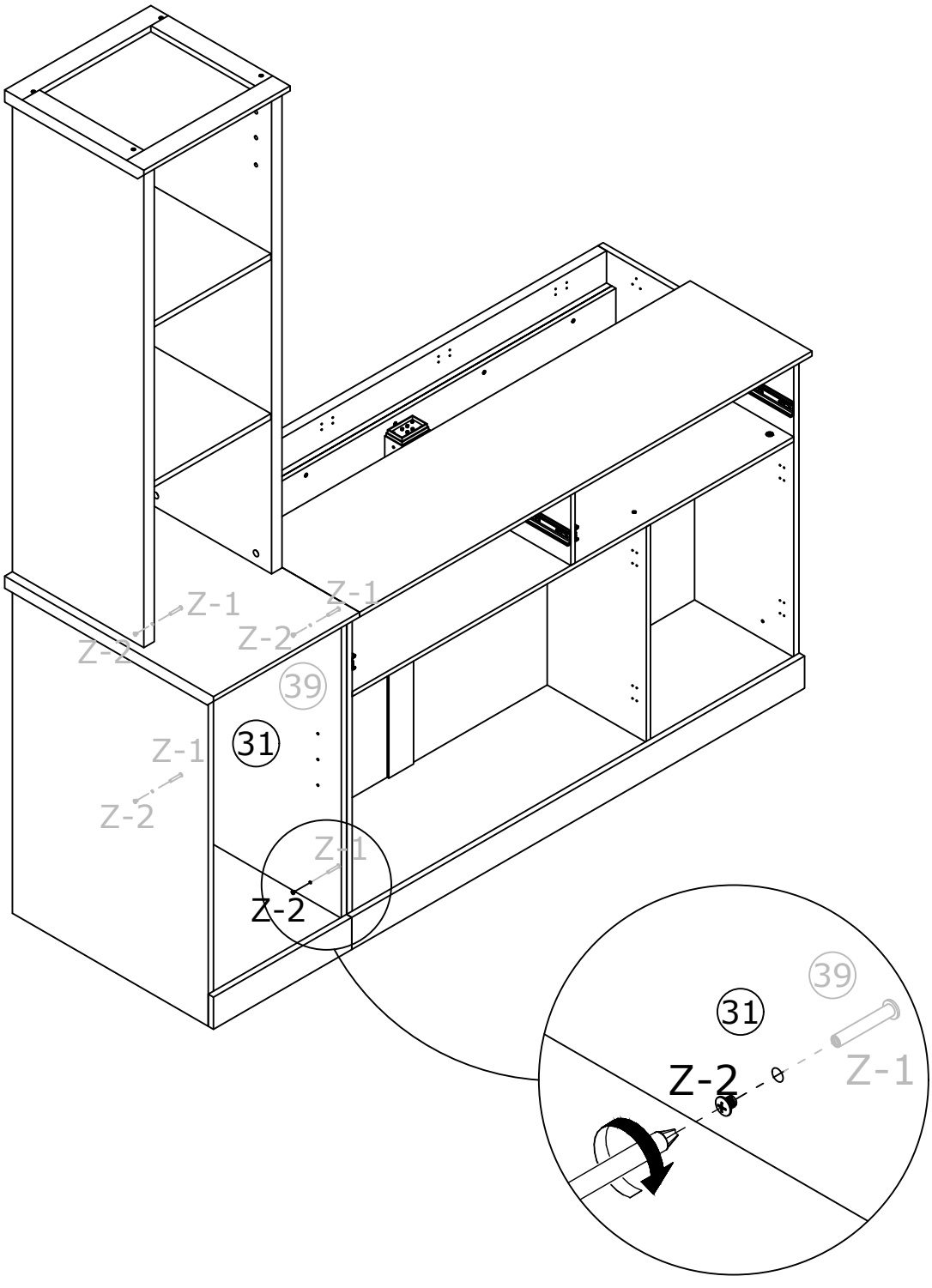

77

F x 2

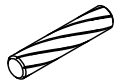

Ø 6 x 30mm

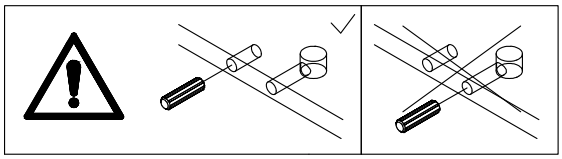

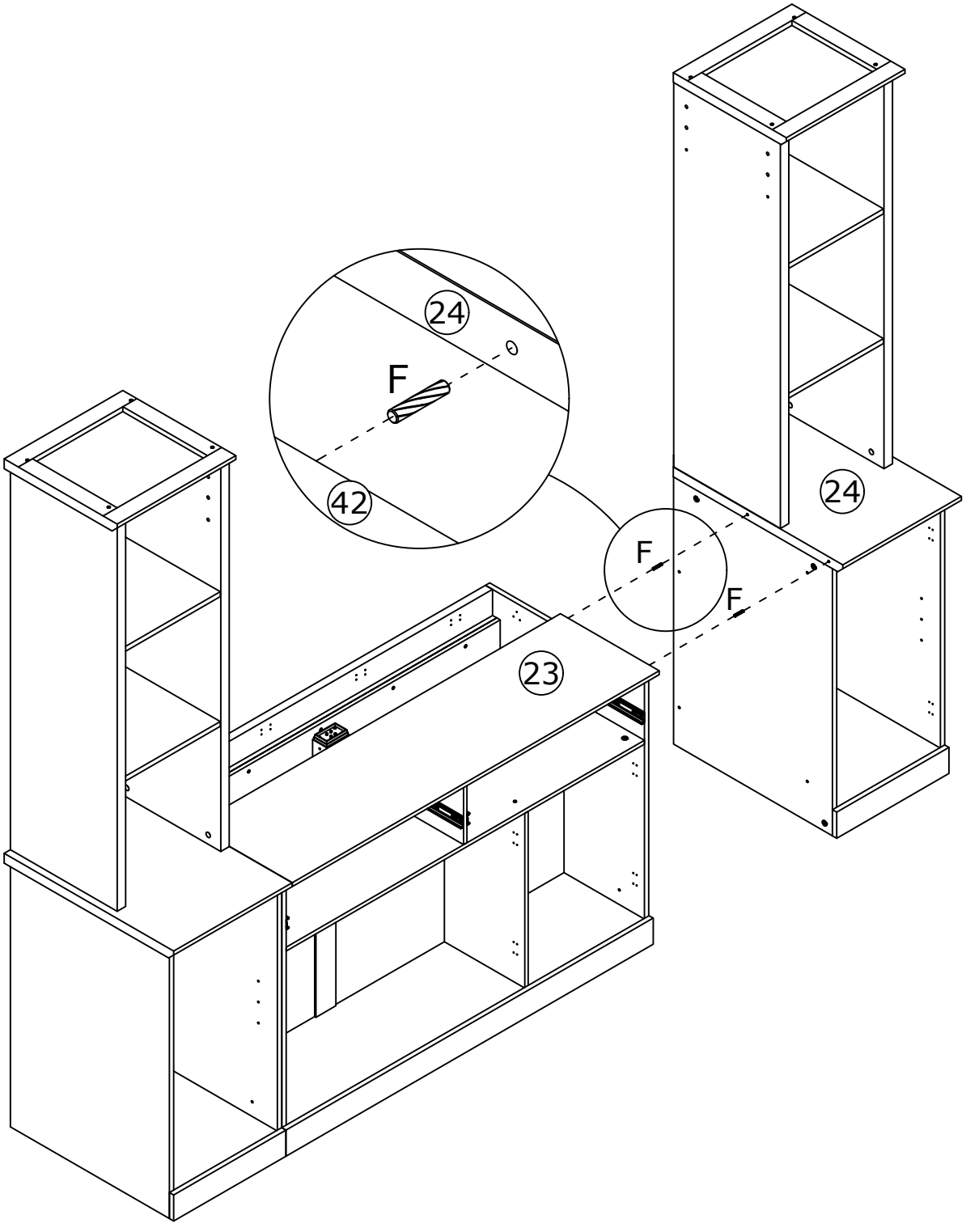

78

Z x 4

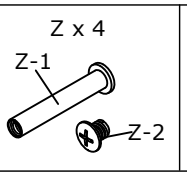

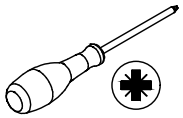

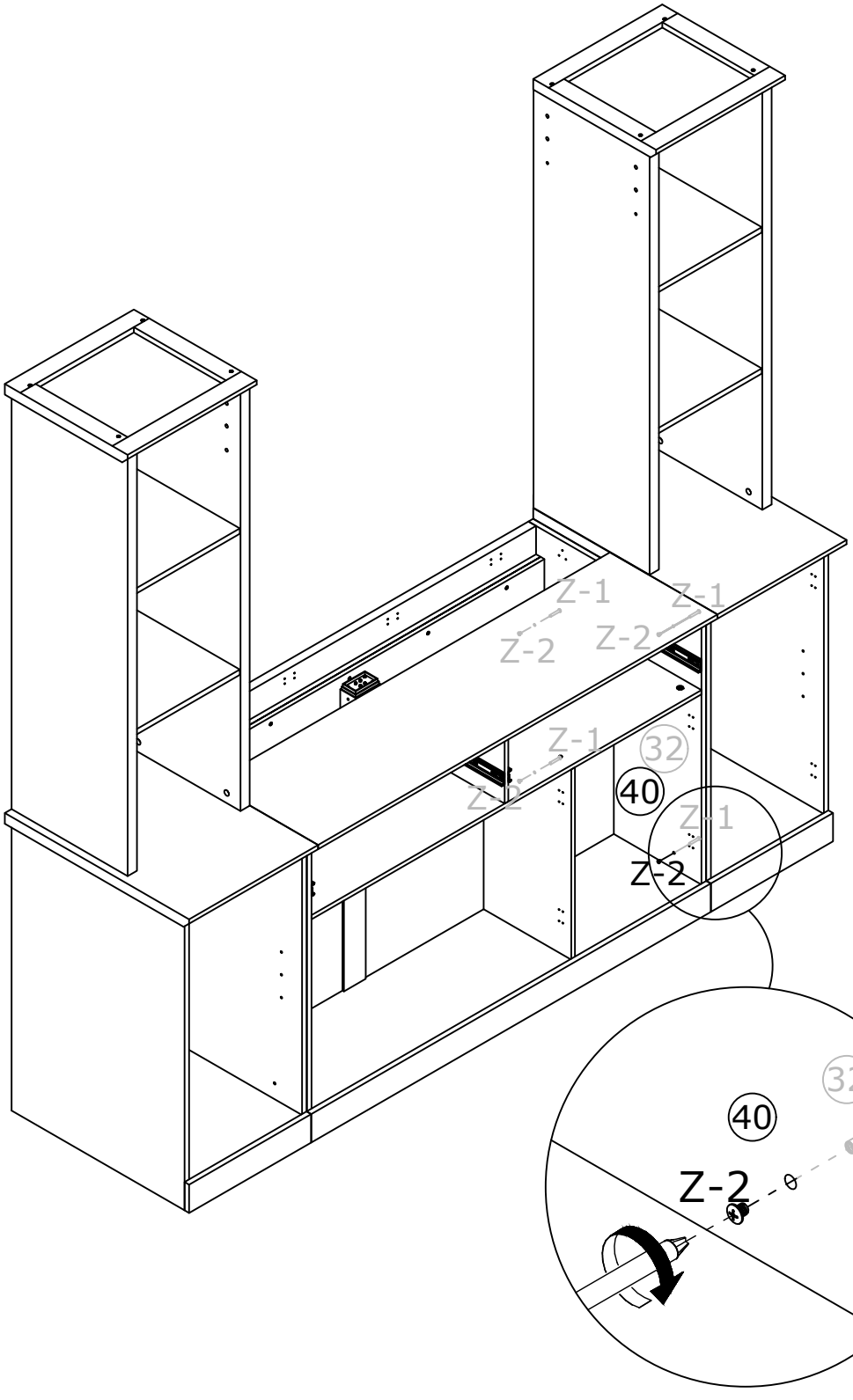

79

F x 4

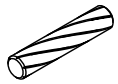

Ø 6 x 30mm

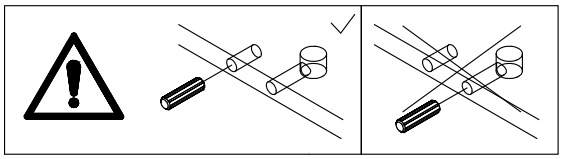

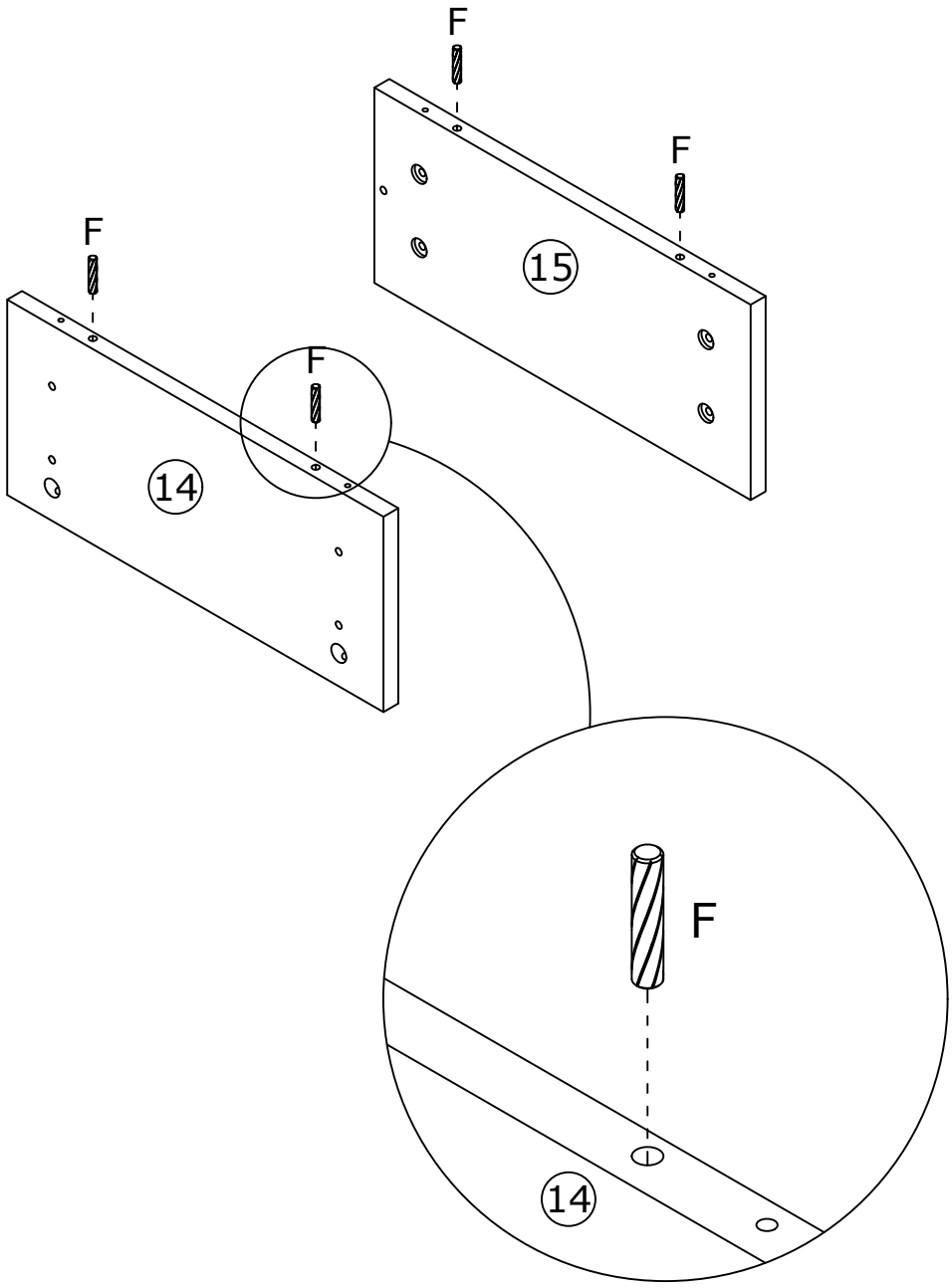

80

F x 2

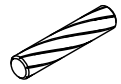

Ø 6 x 30mm

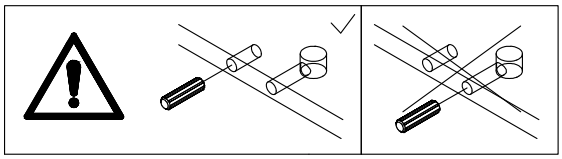

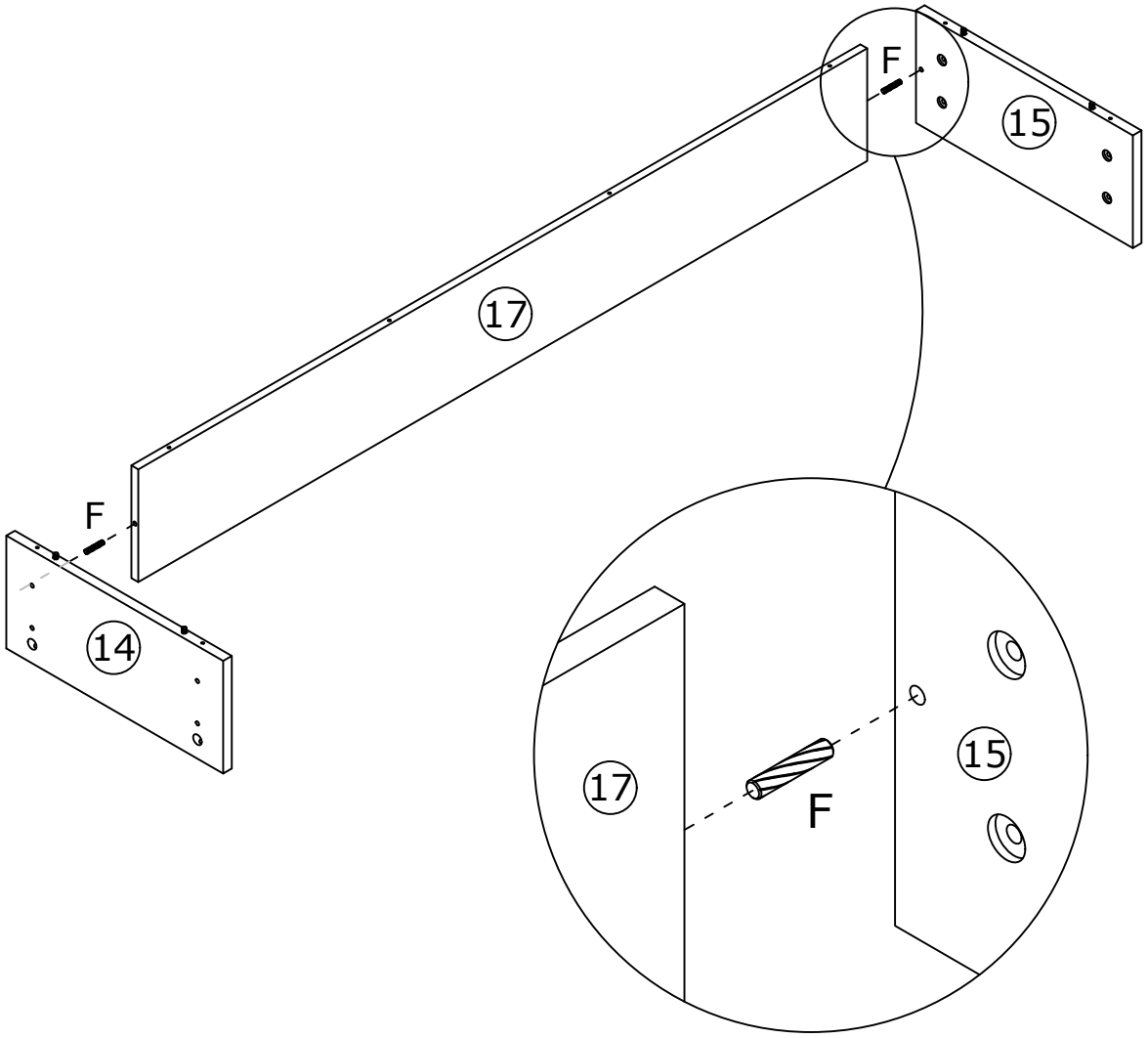

Avoid tilting Panel 14 and Panel 15 to prevent cracks around the holes.

81

E x 8

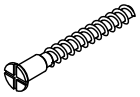

Ø 5 x 40mm

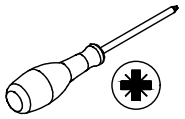

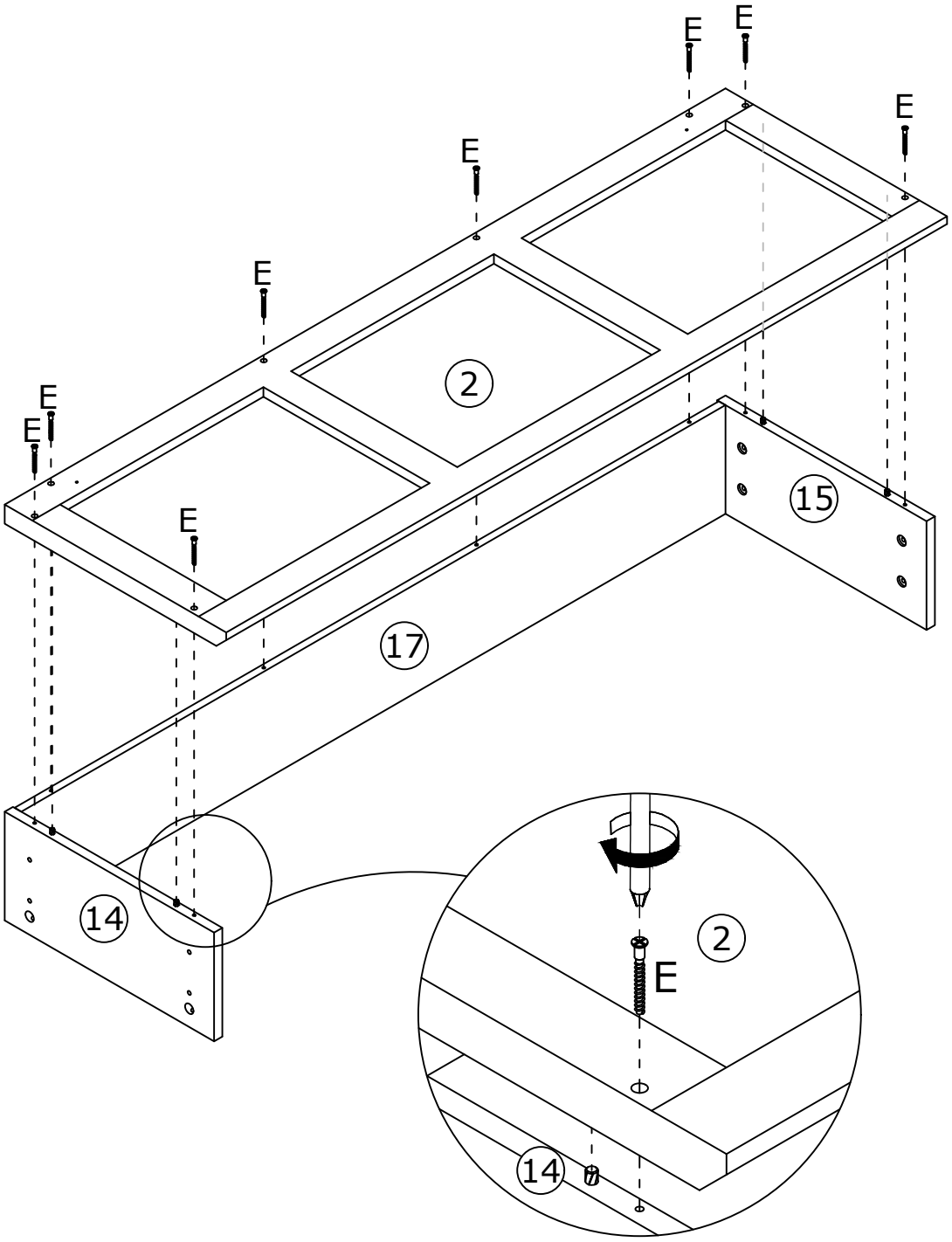

82

B x 8	C x 8	
	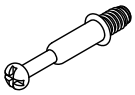 Ø 6 x 35mm	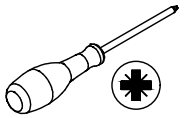

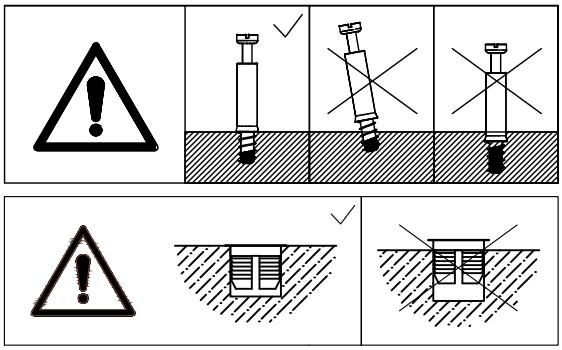

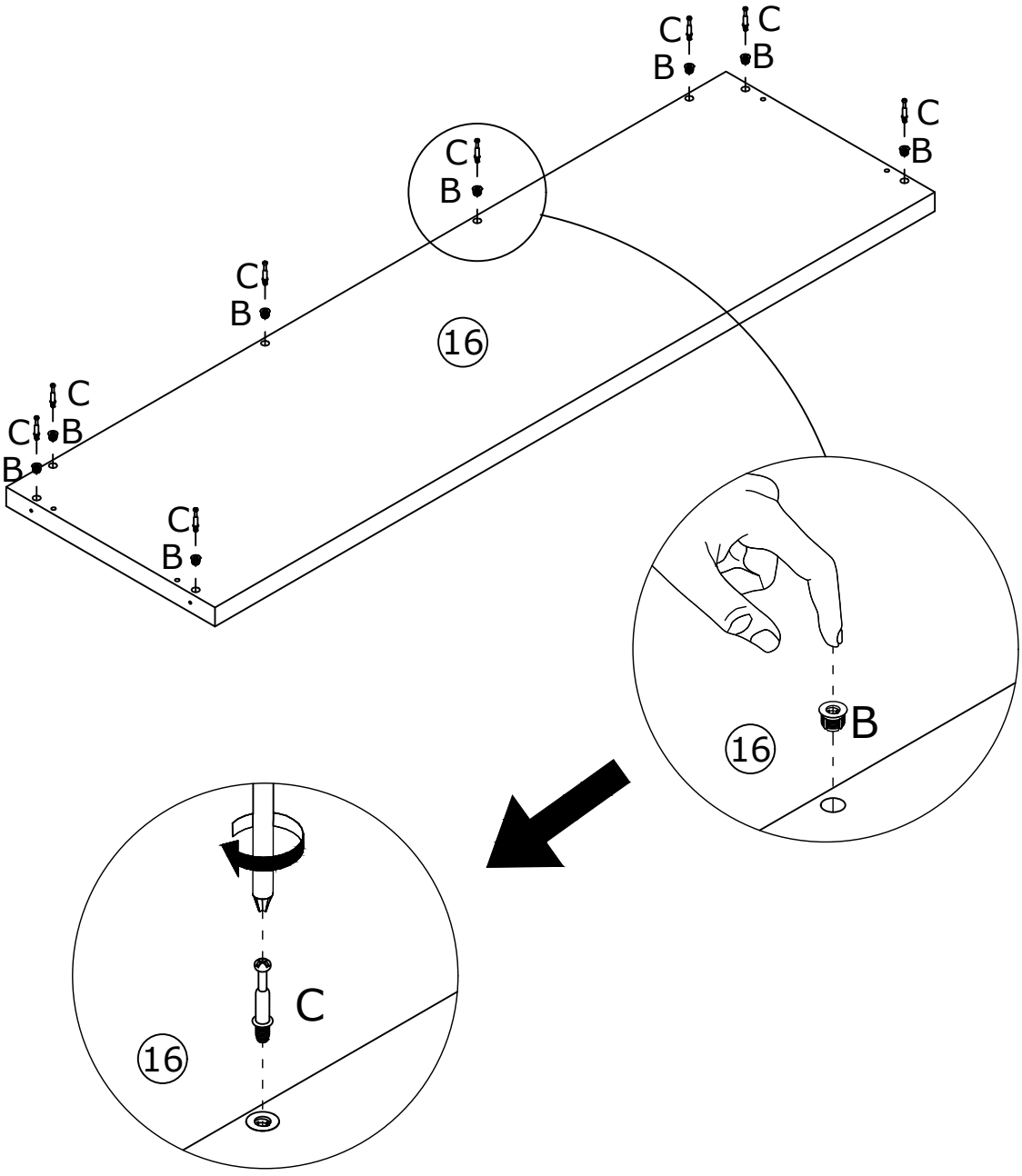

83

F x 4

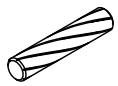

Ø 6 x 30mm

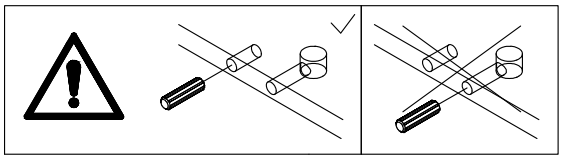

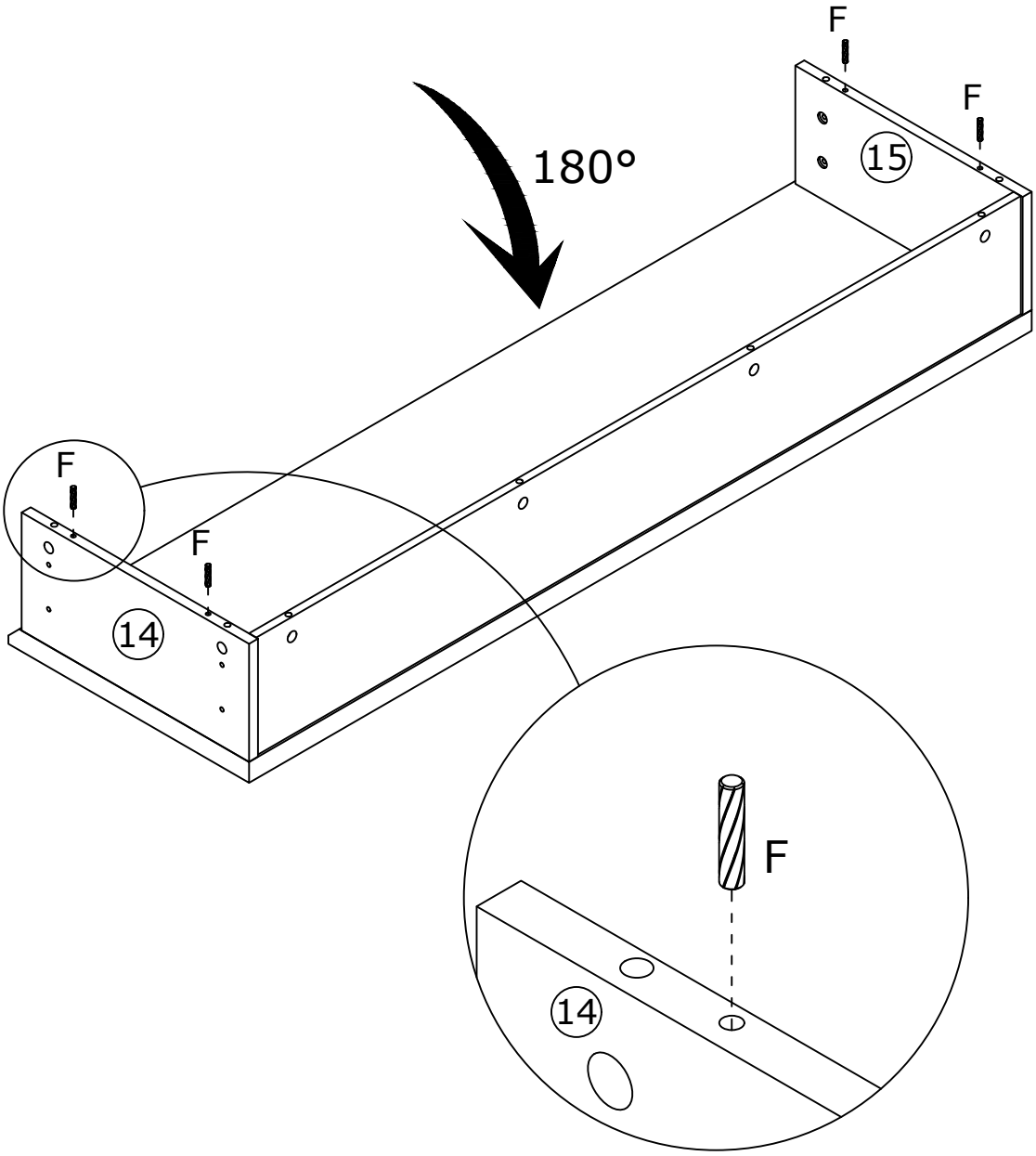

84

A x 8



Ø 15 x 10mm

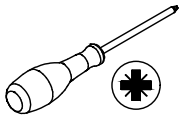

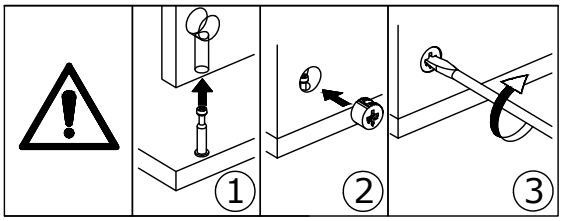

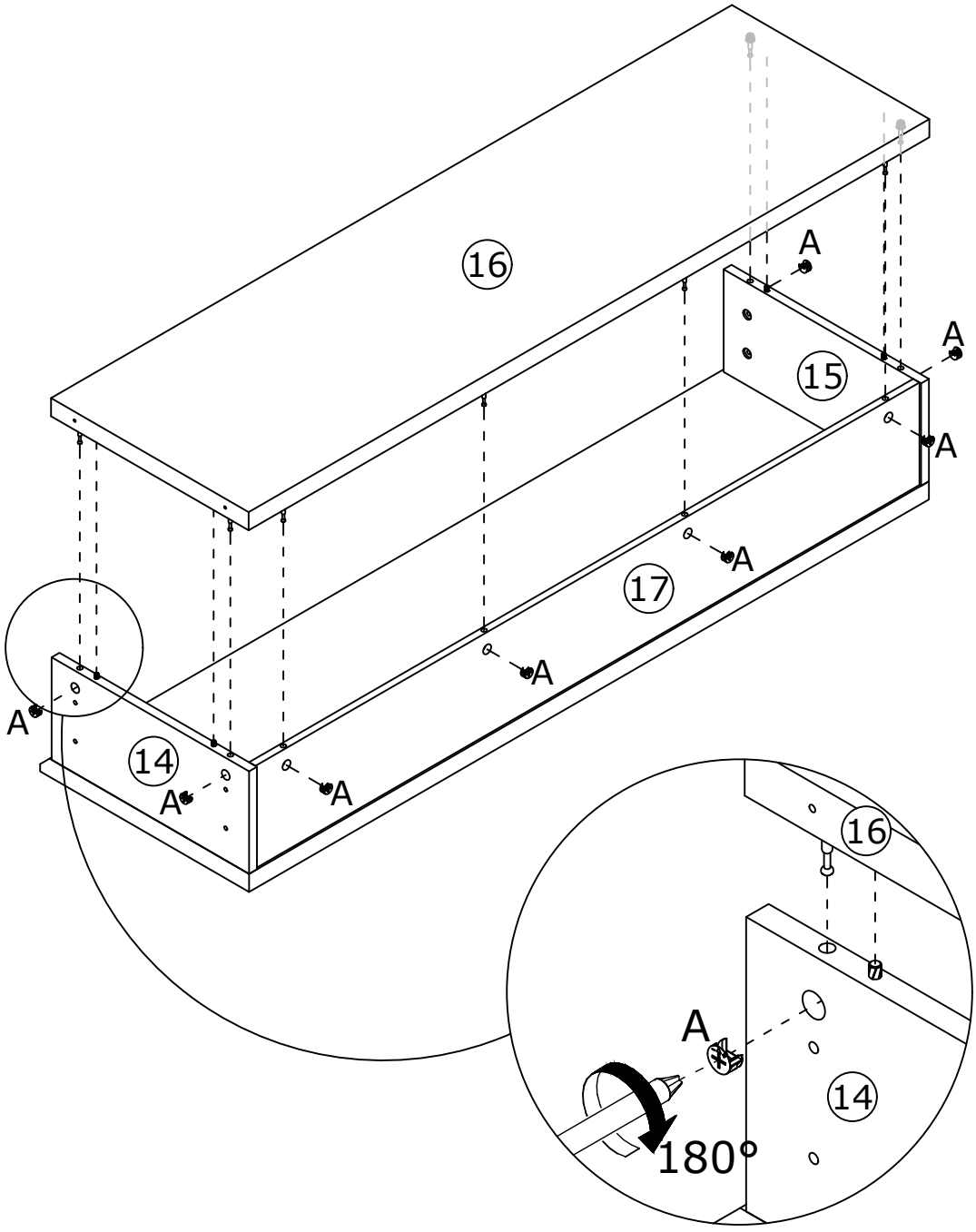

85

AC x 8	70 x 1	
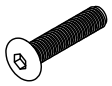 Ø 6 x 35mm	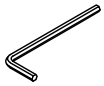 M4	

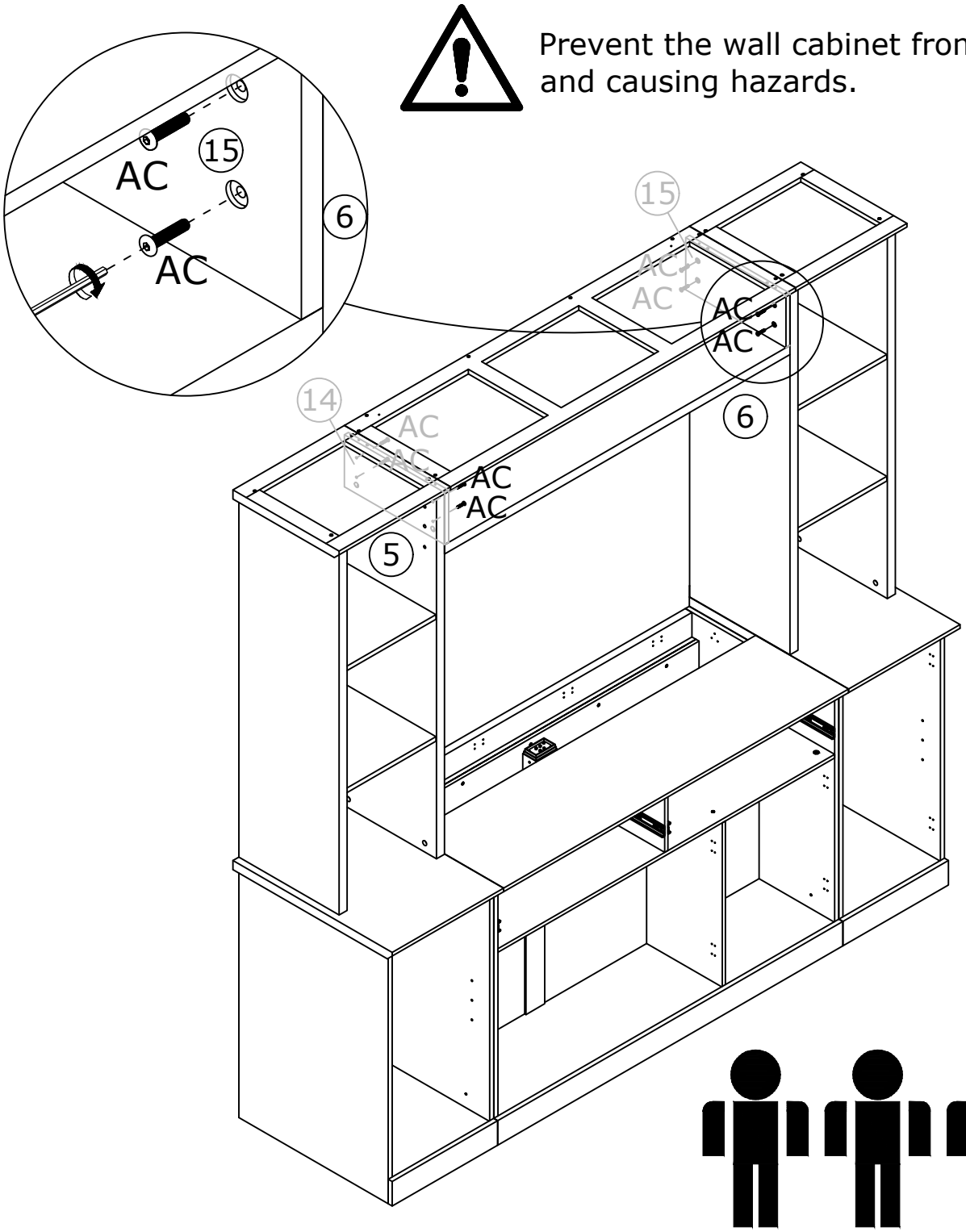

3 OF ADULTS

86

E x 4

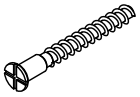

Ø 5 x 40mm

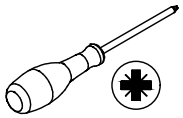

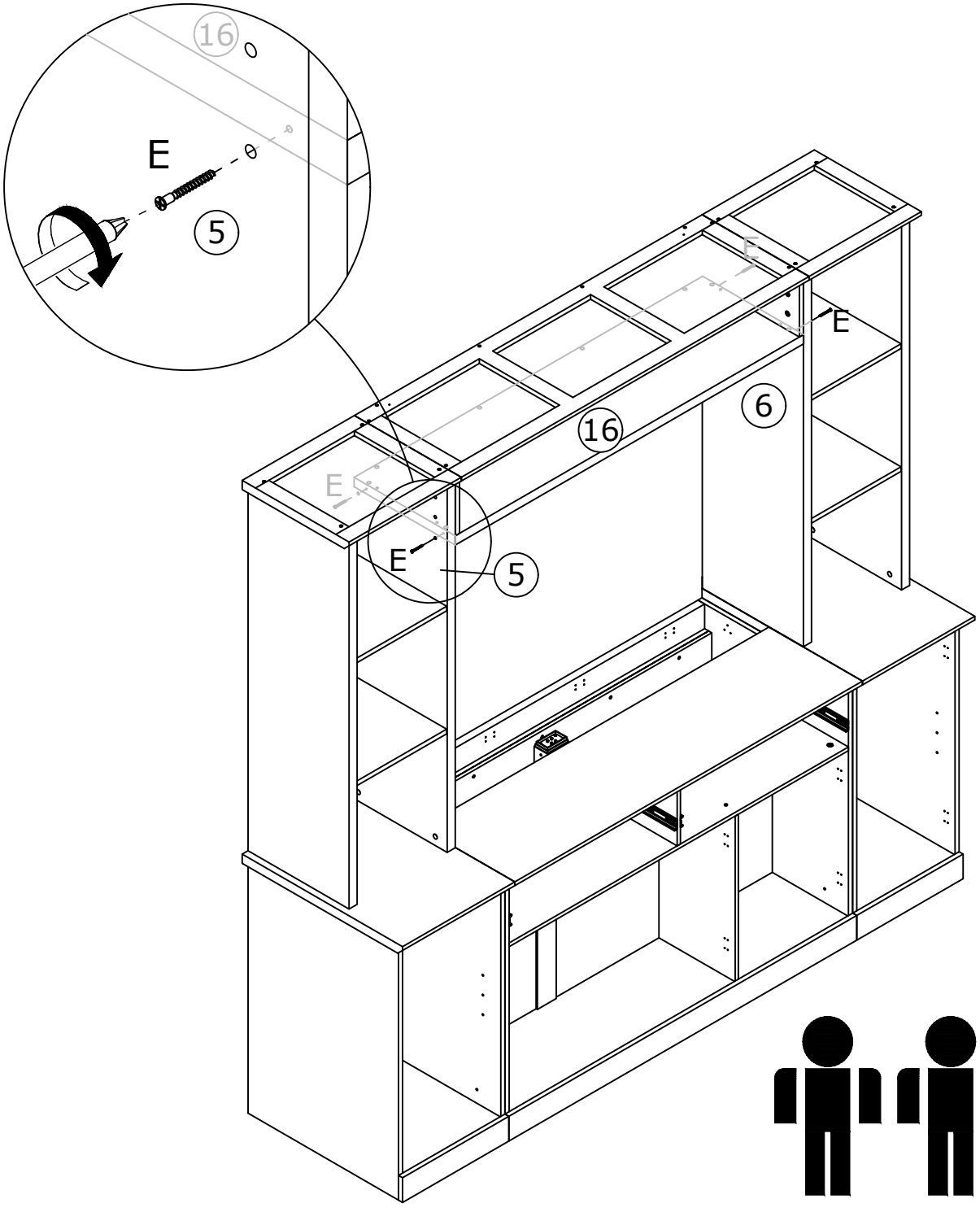

2 OF ADULTS

87

V x 2



Ø 3.5 x 14mm

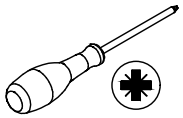



U



Ø3.5 x 12mm

V



Ø3.5 x 14mm

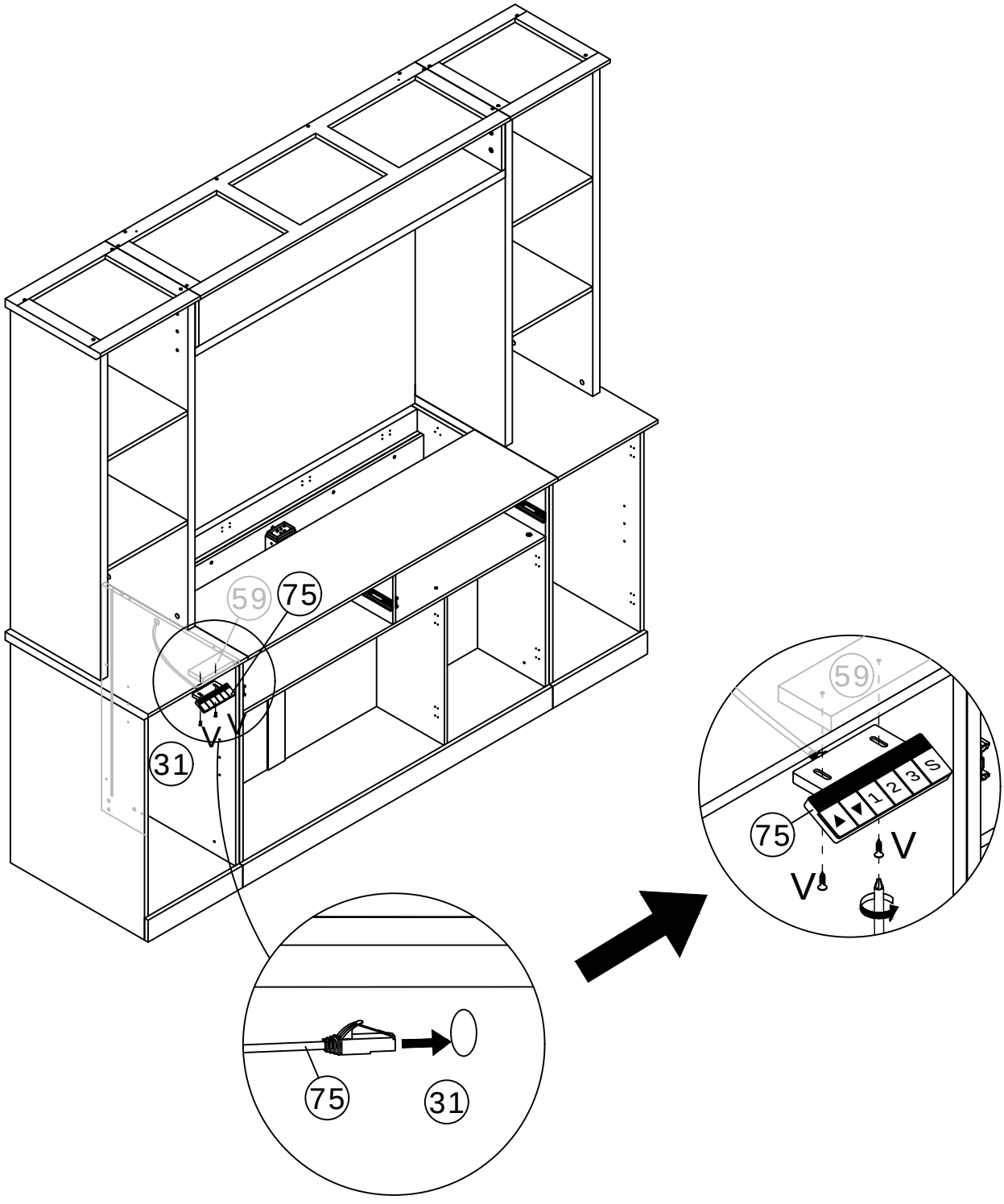

88

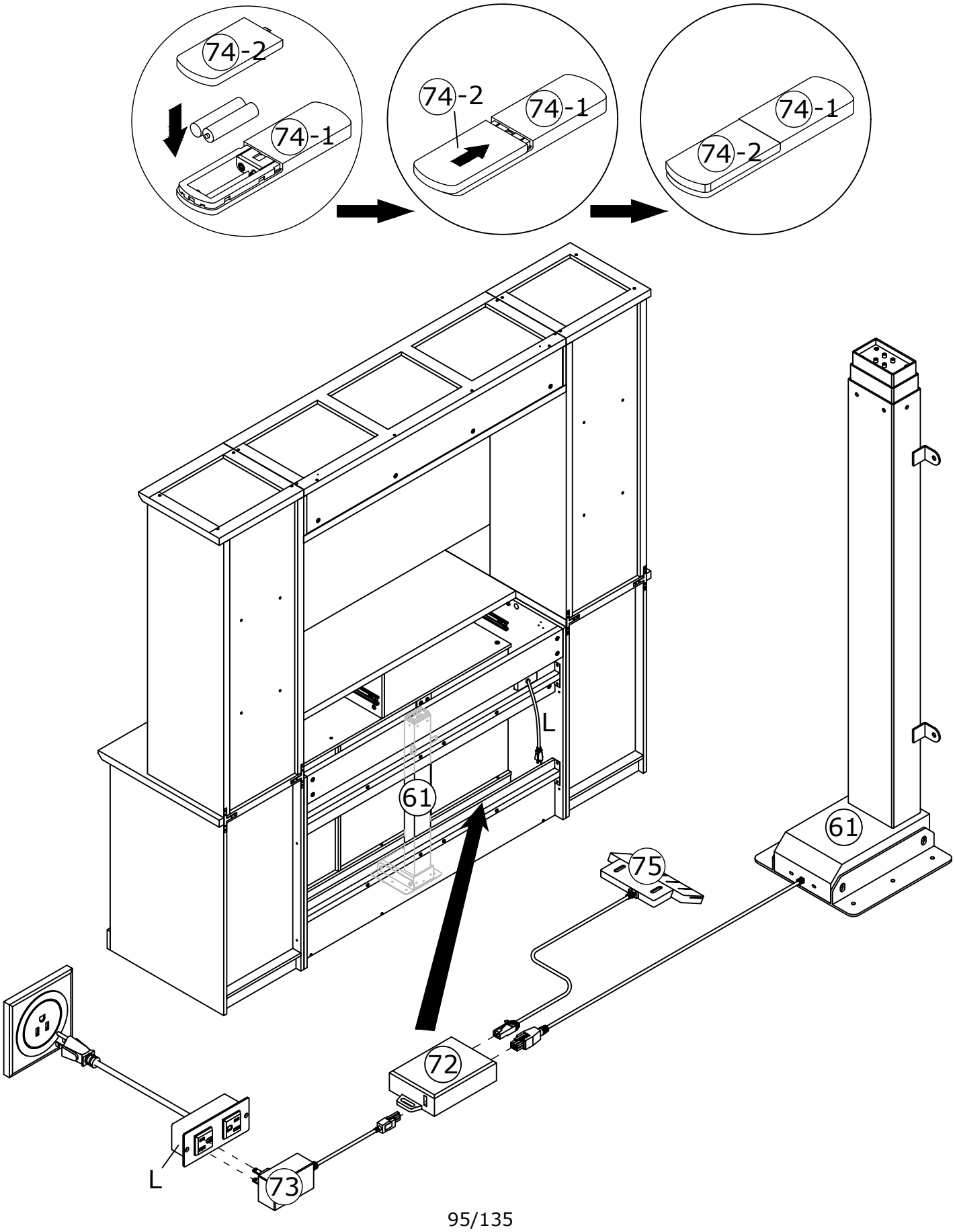

89

V x 2



Ø 3.5 x 14mm

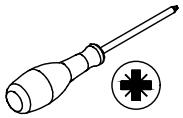



U



Ø3.5 x 12mm

V



Ø3.5 x 14mm

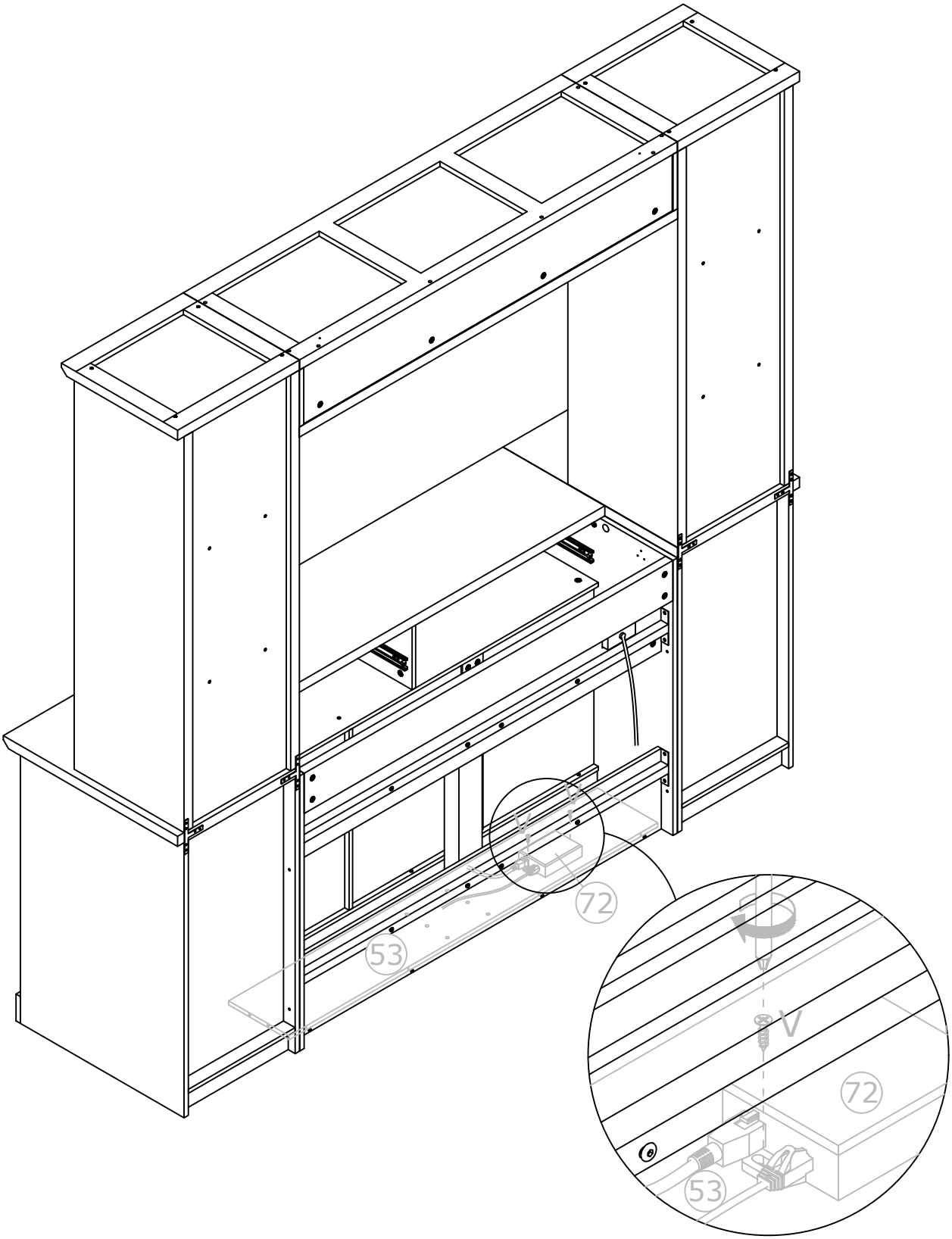

90

V x 5	AA x 5	
 Ø 3.5 x 14mm		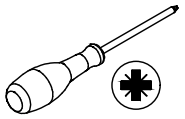

	U	V
	 Ø3.5 x 12mm	 Ø3.5 x 14mm

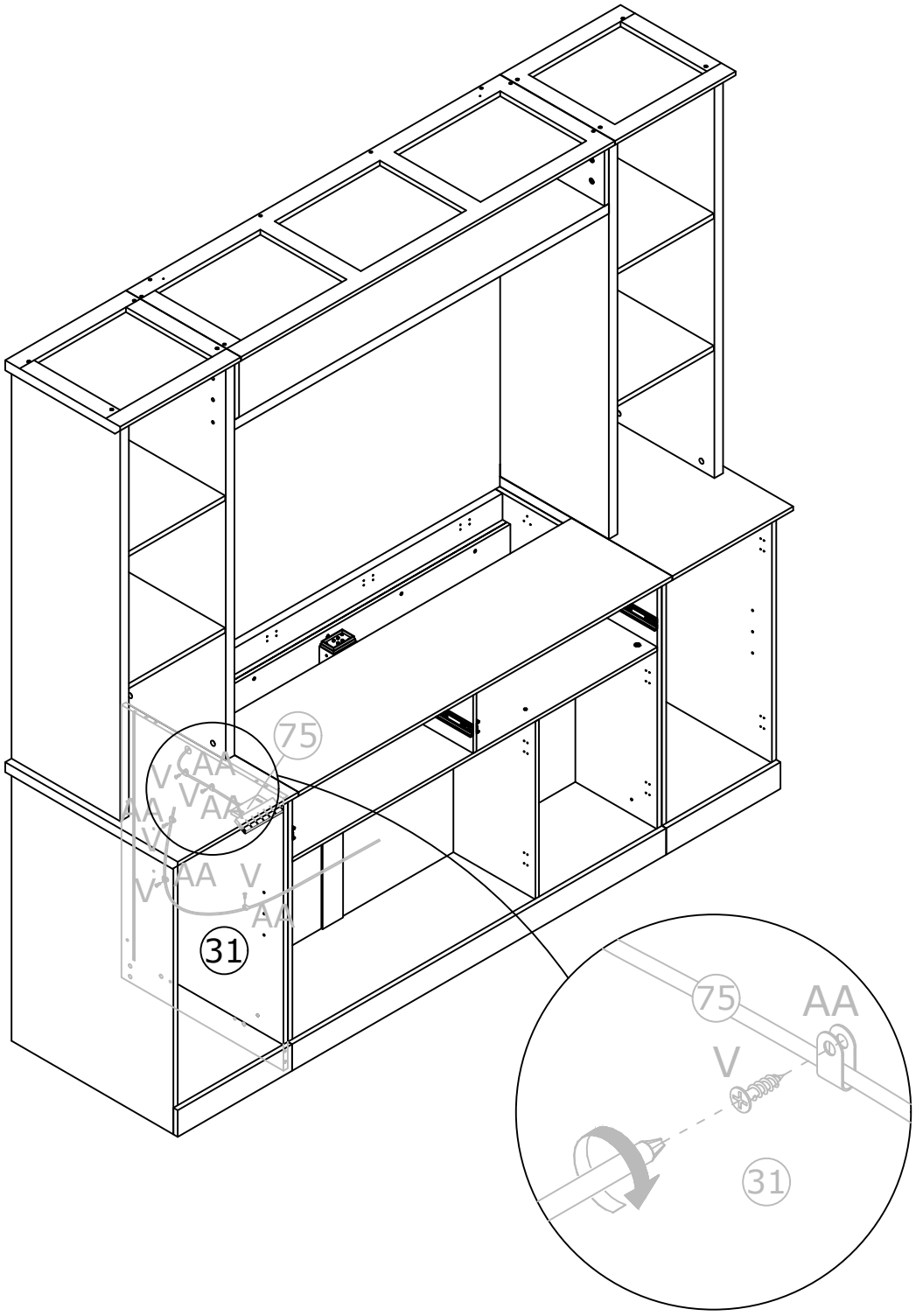

本产品出厂前完成配对

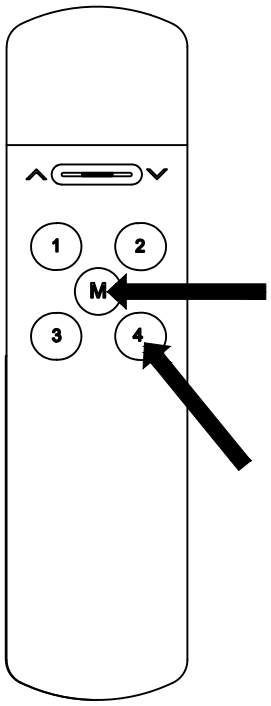

长按按键（M）和按键（4），持续5秒钟。

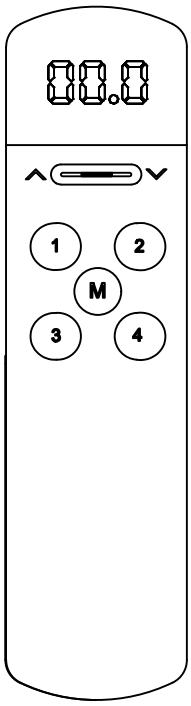

显示屏闪烁后松开，并将部件（41）接通到部件（V）。

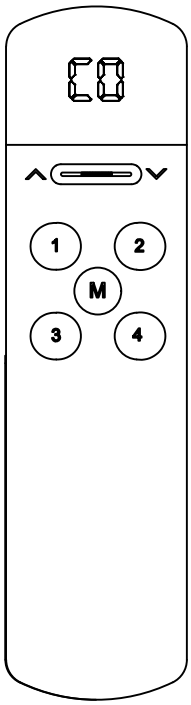

显示屏显示“C0”为已配对成功。

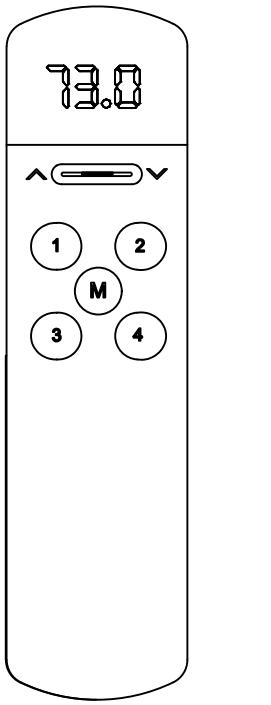

显示屏显示“73.0”即可使用。

91

Raise component (61) to its maximum height.

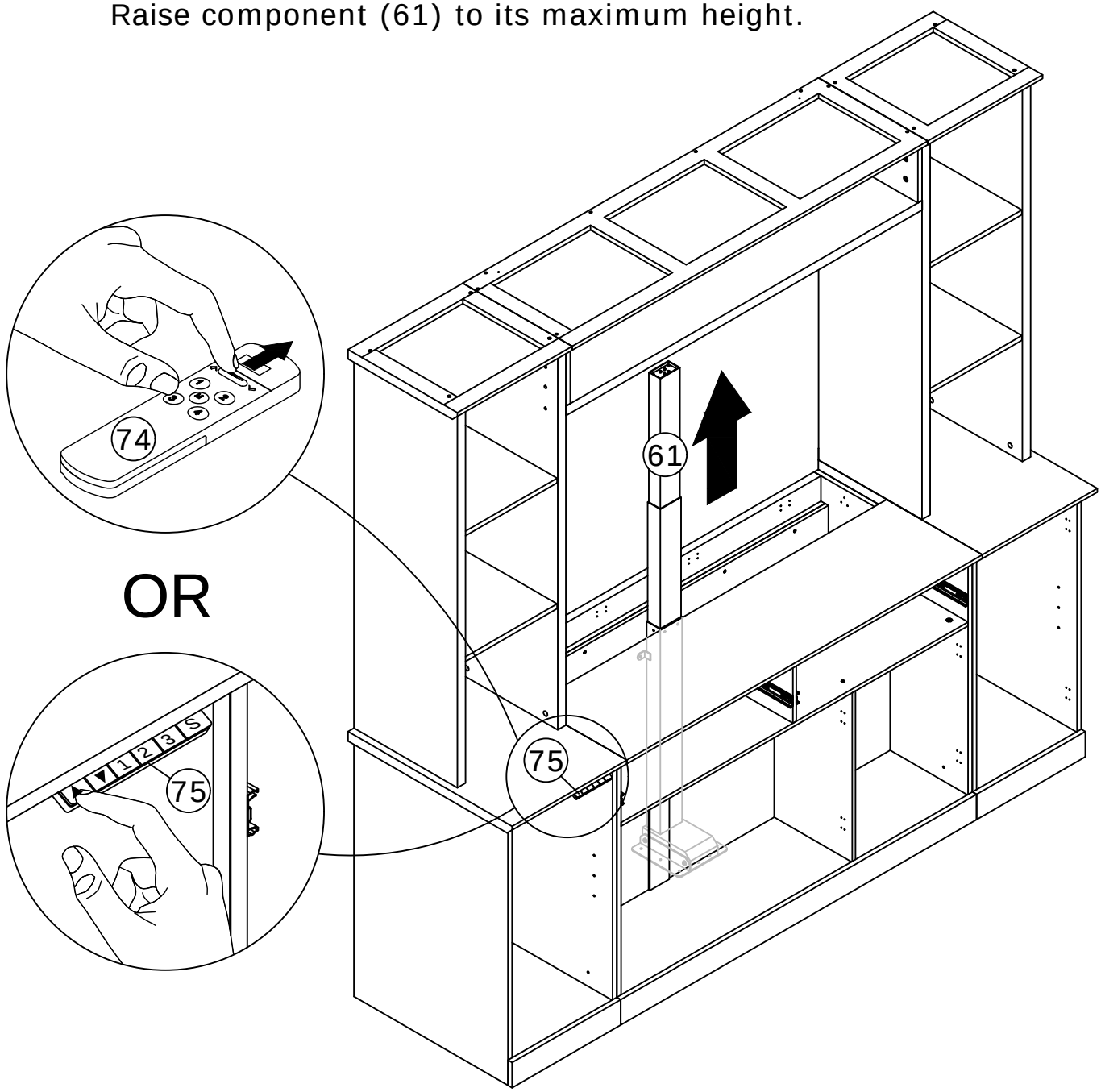

92

67 x 4	70 x 1	
	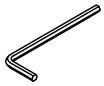	
Ø 6 x 15mm	M4	

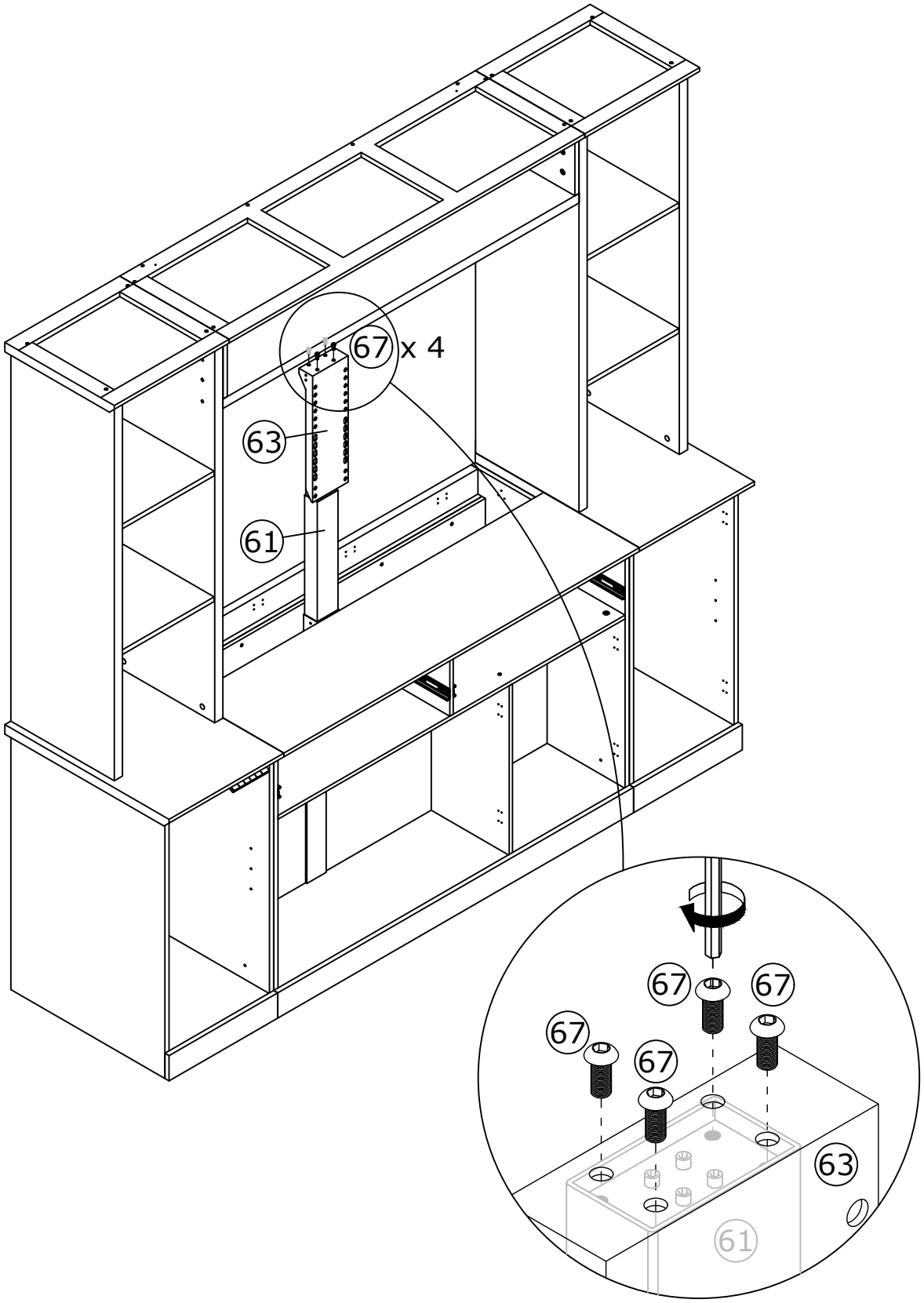

93

AB x 4	70 x 1	
	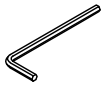	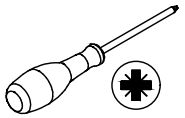
Ø 6 x 12mm	M4	

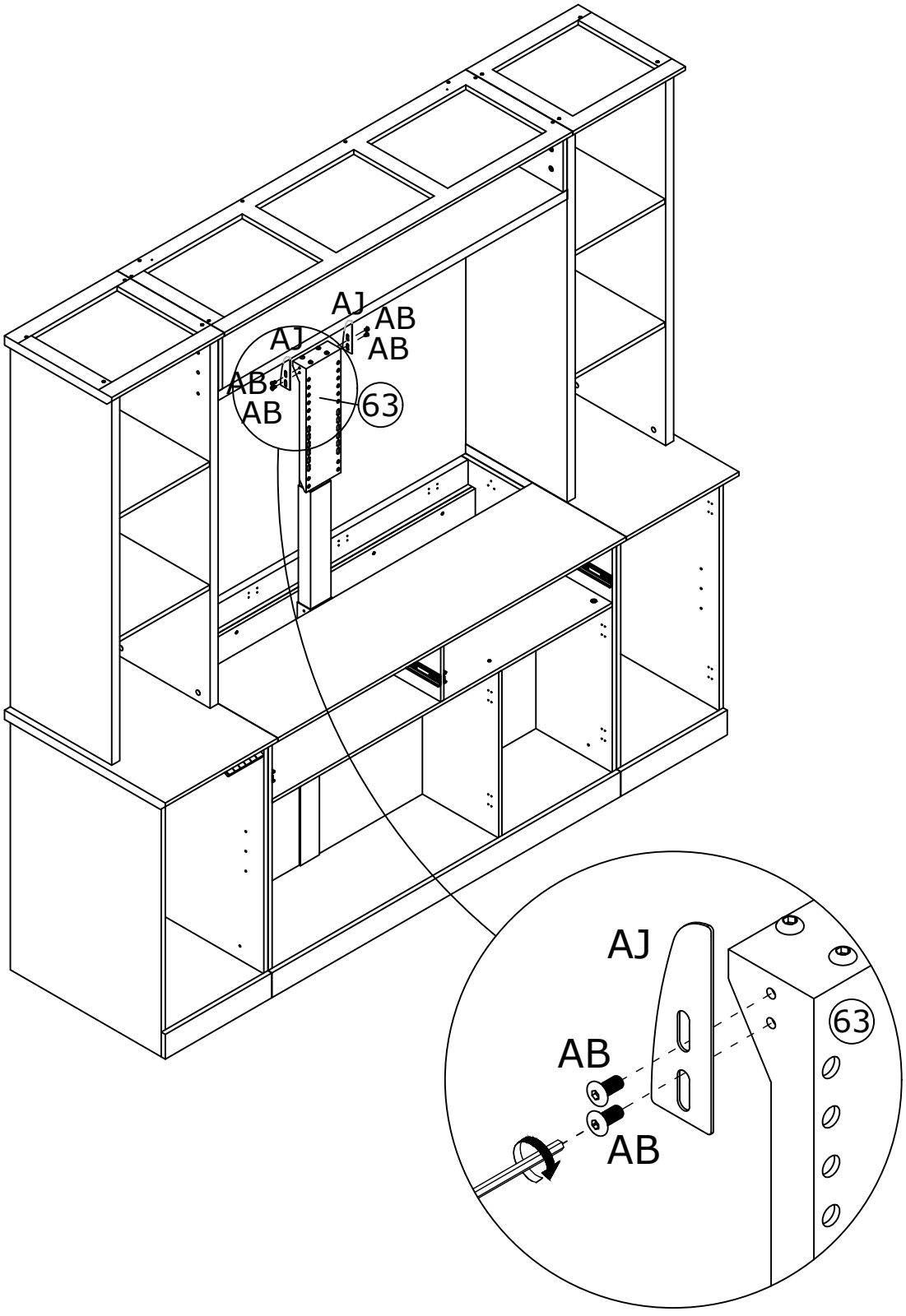

94

Lower component (61) to its minimum height.

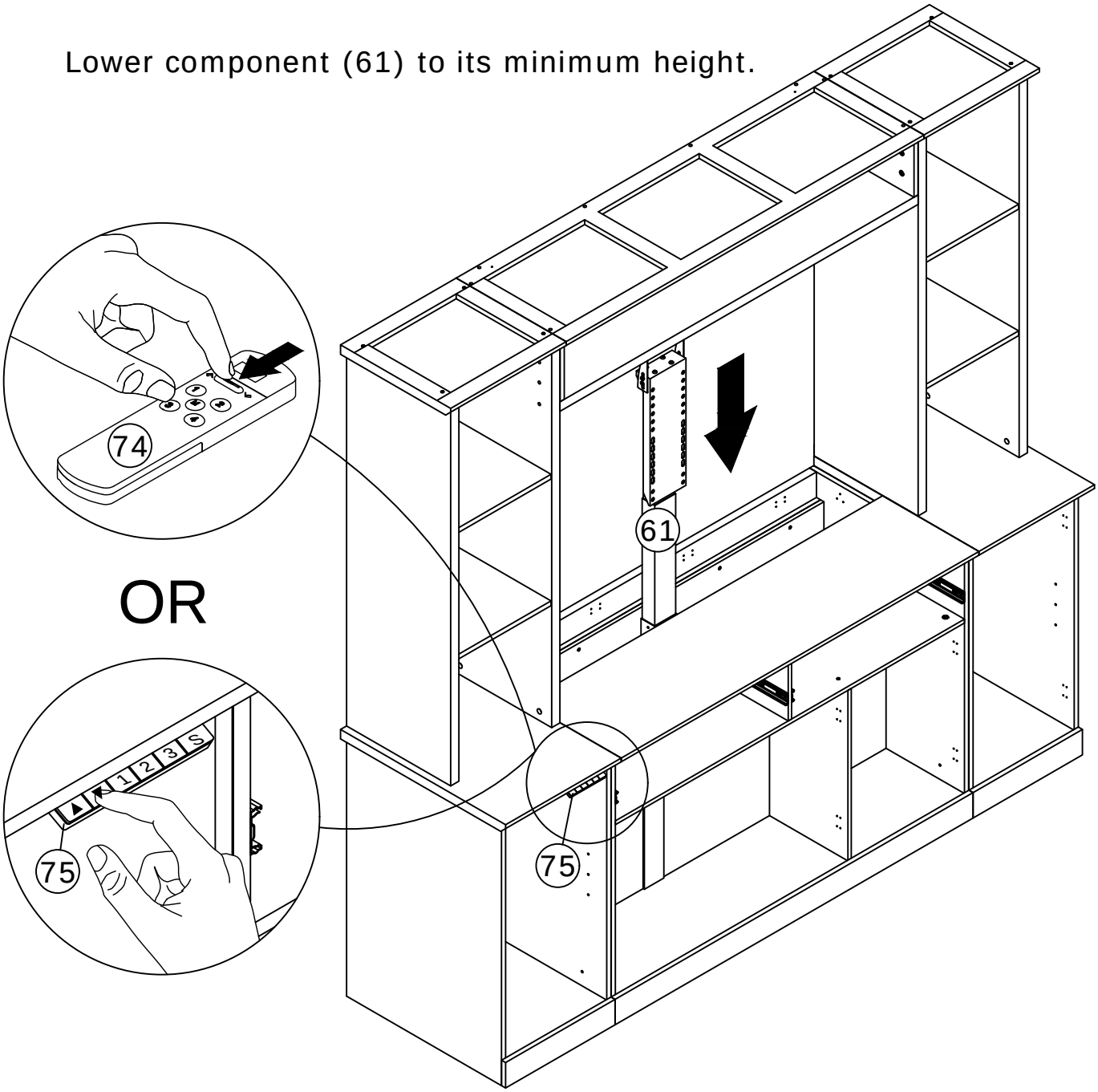

Pay attention to the difference between the middle parts of the three types of door hinges.

- Hinge (Q) for door panel 22.
- Hinge (S) for outer door panels.
- Hinge (T) for middle door panels.

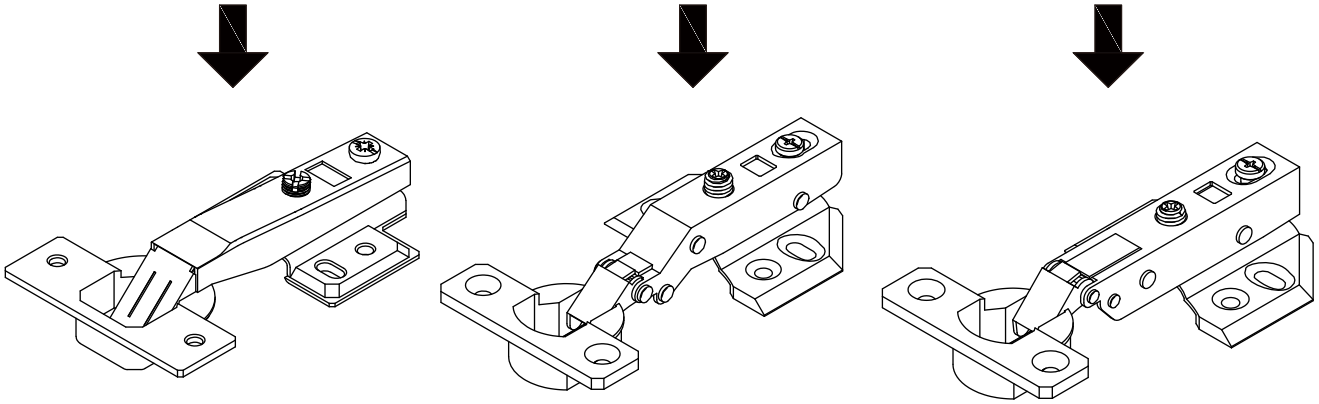

Q S T

95

Q x 4	R x 8	
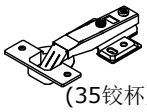 (35铰杯)	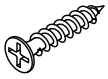 Ø 3.5 x 20mm	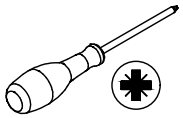

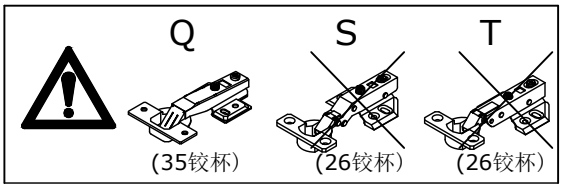

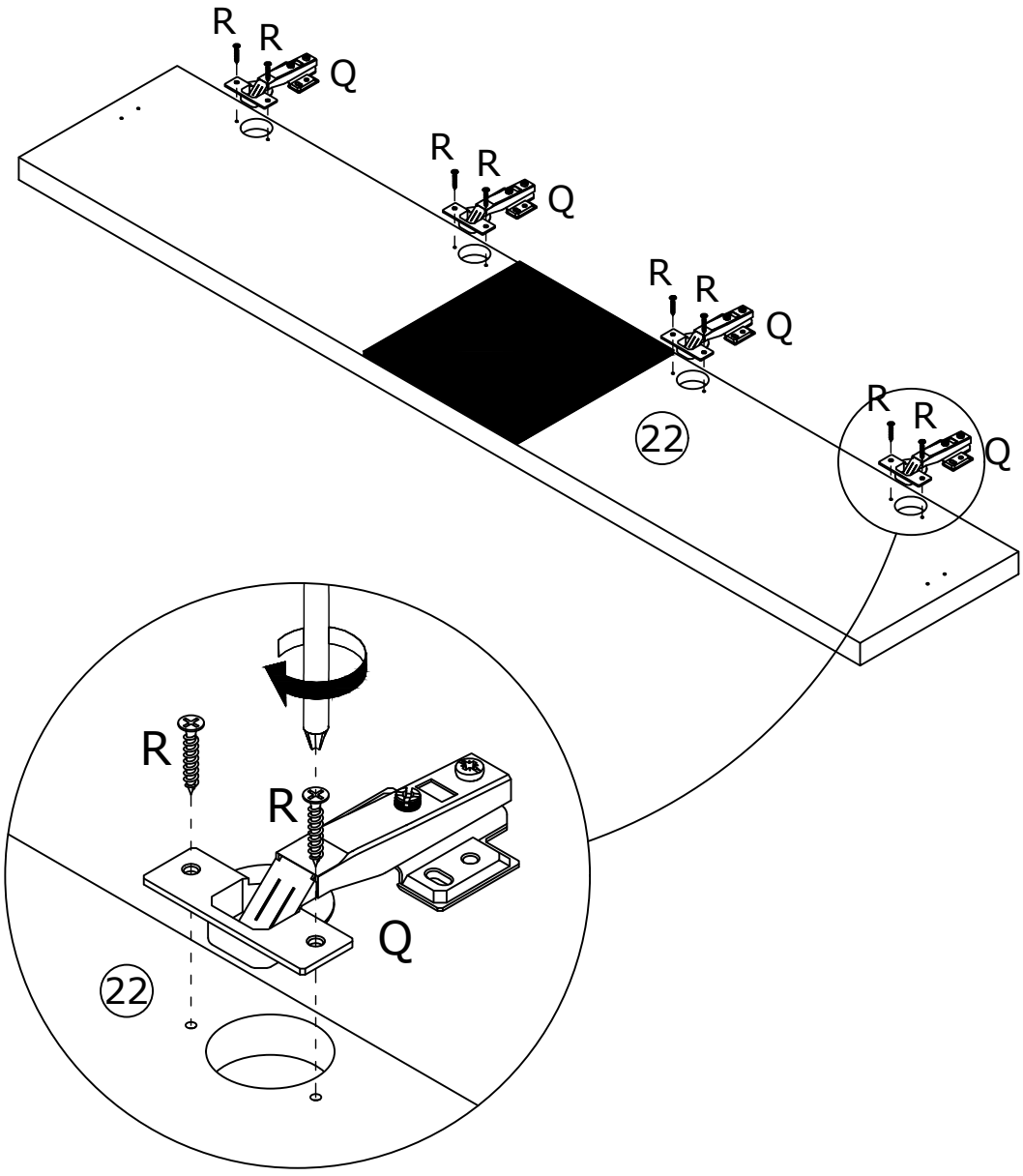

96

R x 16

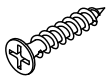

Ø 3.5 x 20mm

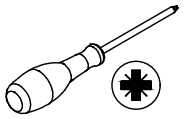

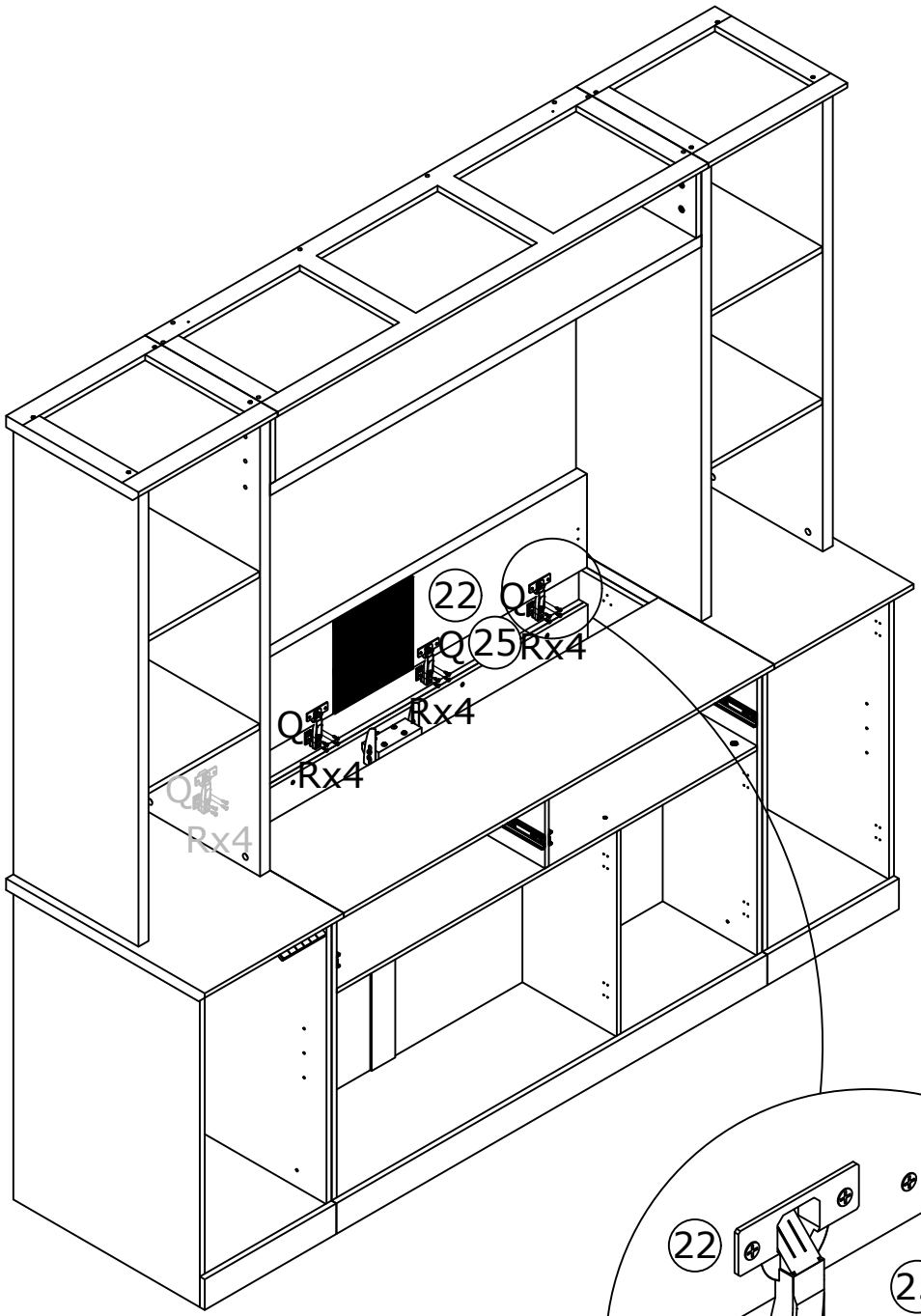

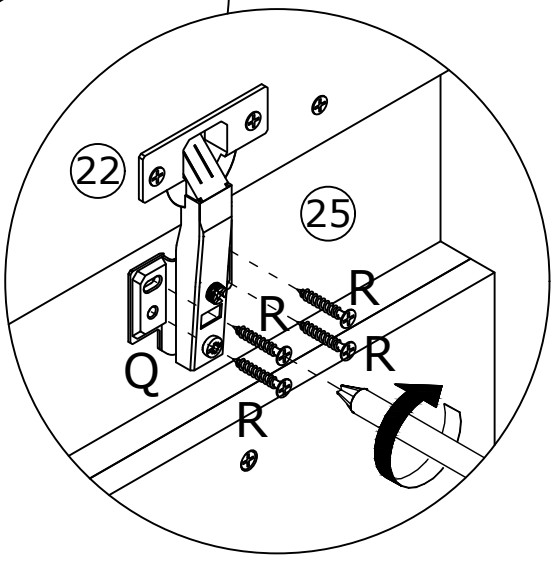

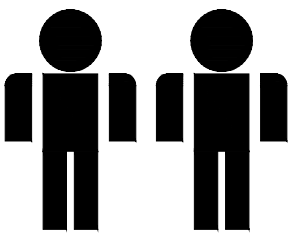

2 OF ADULTS

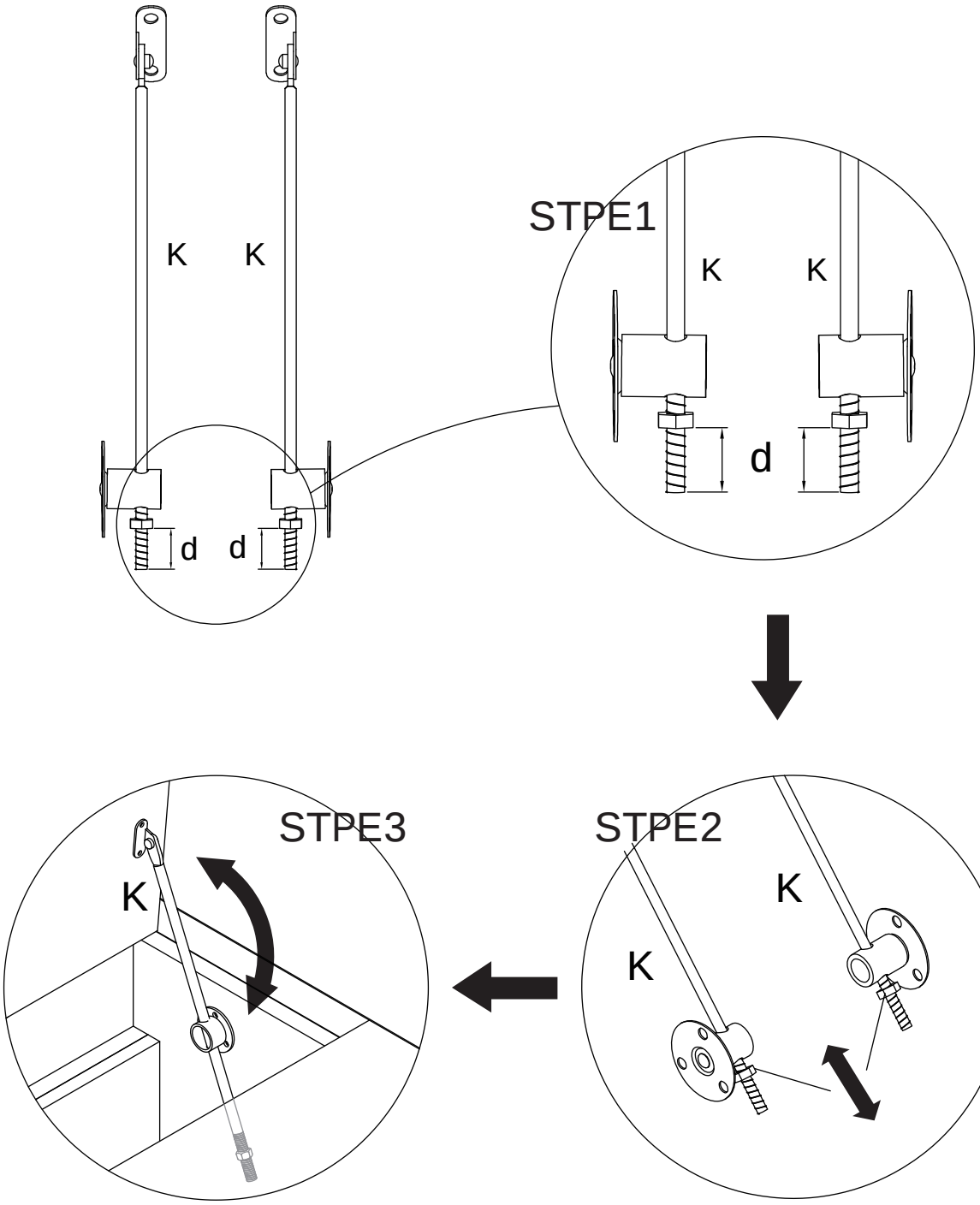
K
K
d
d
STPE1
K
K
d
STPE2
K
K
STPE3
K

97

K x 2	V x 10	
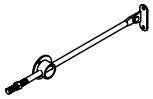	 Ø 3.5 x 14mm	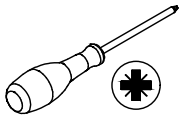

	U	V
	 Ø3.5 x 12mm	 Ø3.5 x 14mm

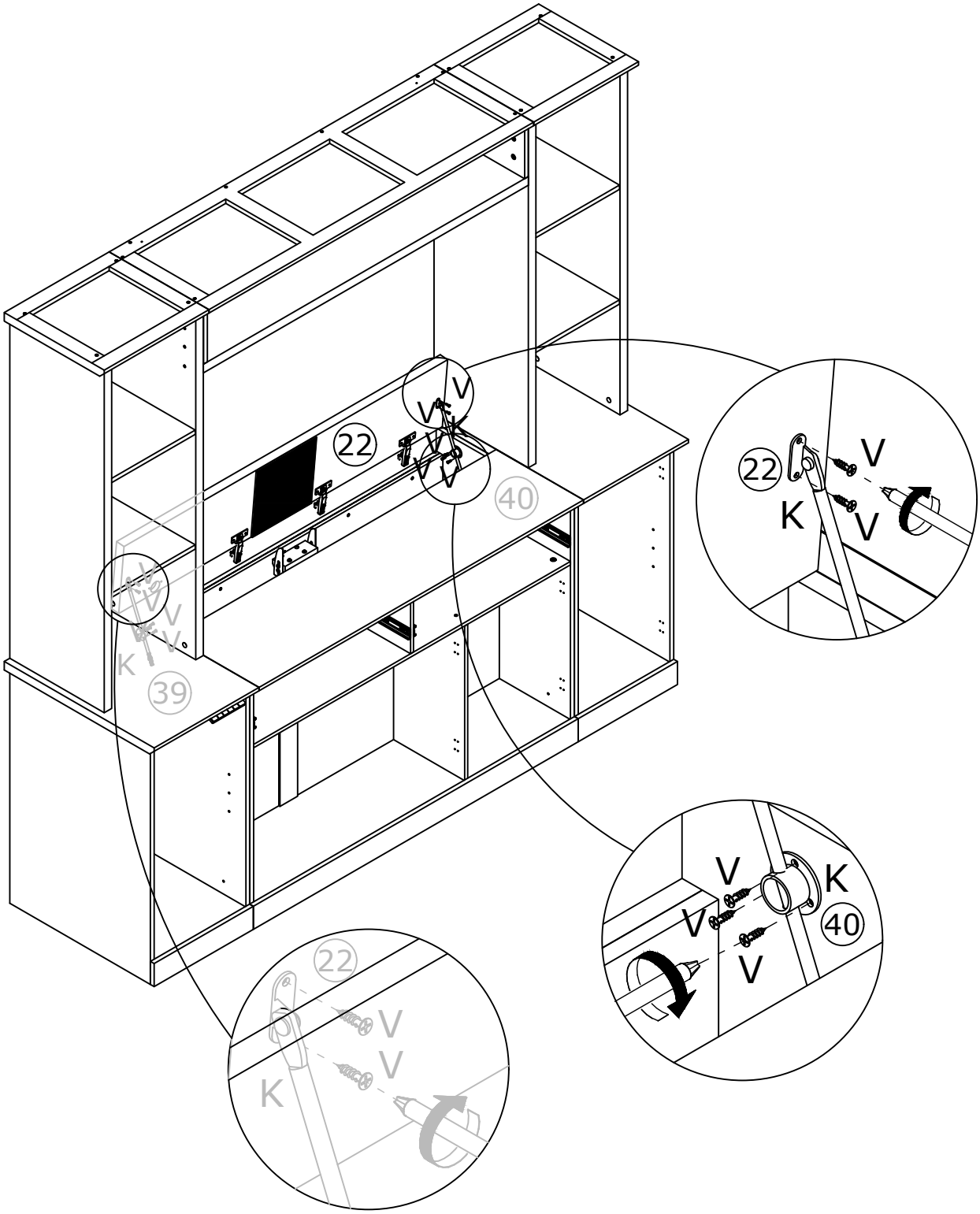

98

Raise component (61) to its maximum height.

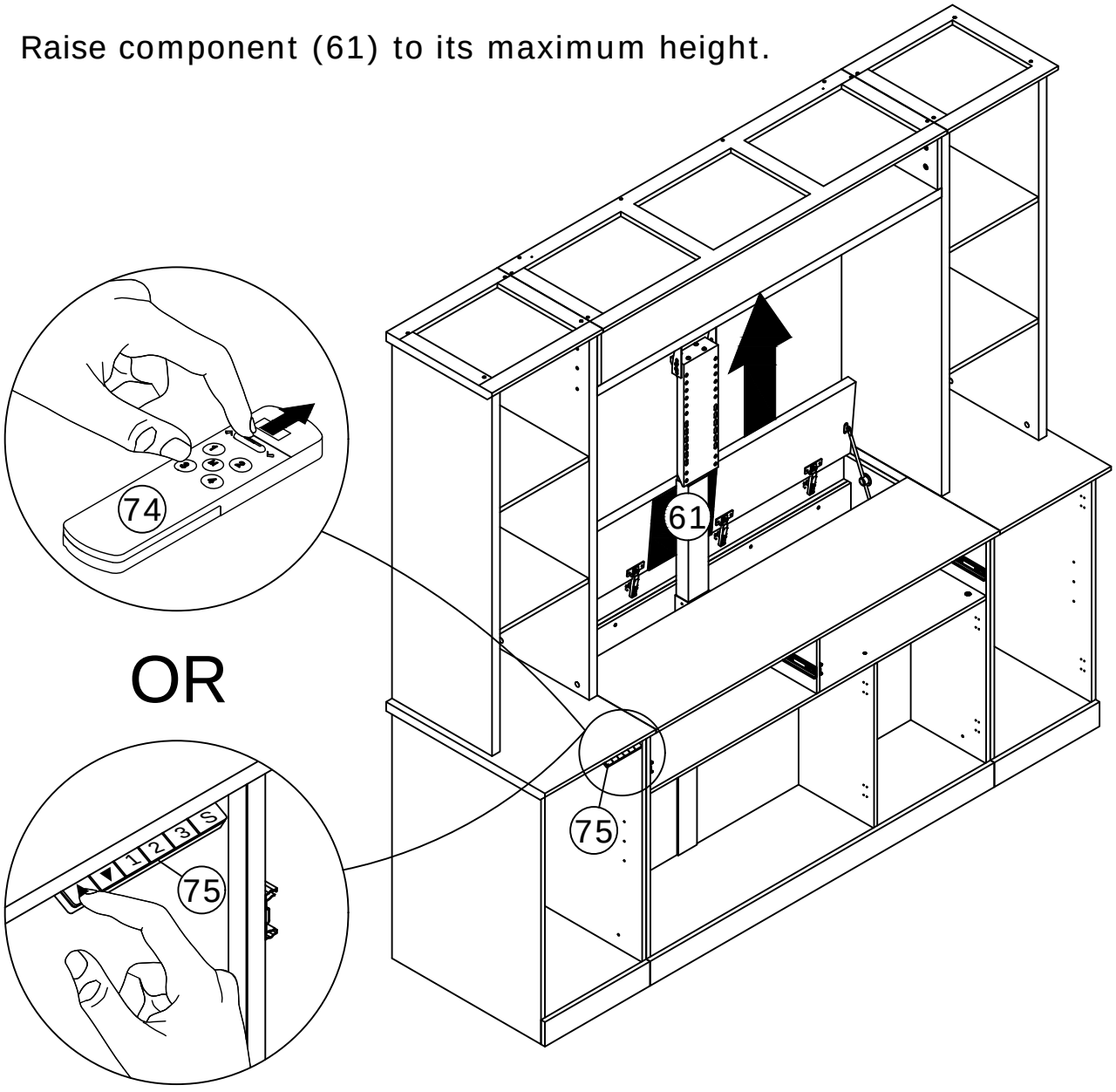

99

AH x 1	(68) x 4	(69) x 4	(71) x 1	
				
M8	Ø 8 x 15mm	M8	M5	

Refer to Step 102 for the mounting height of component (64).

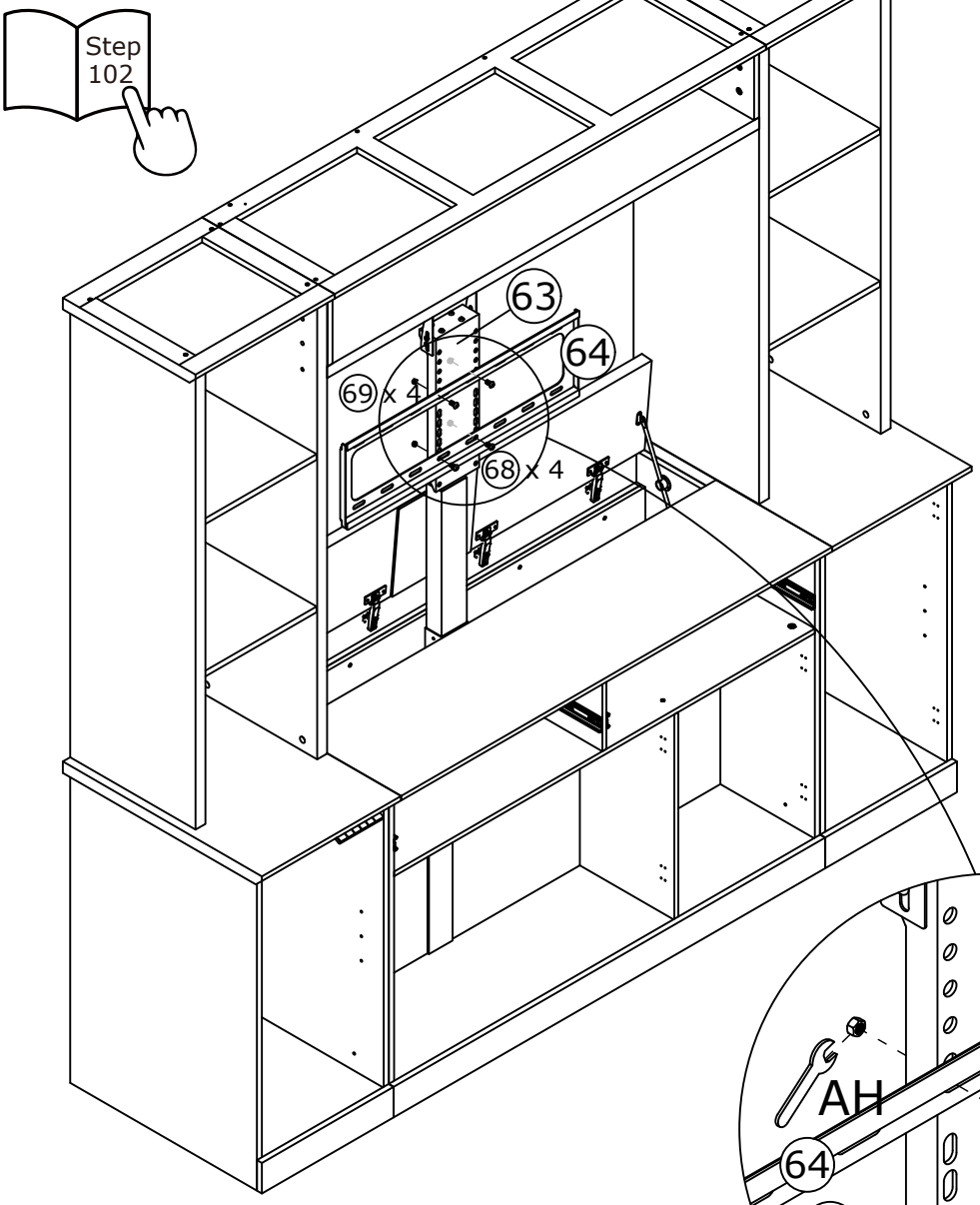

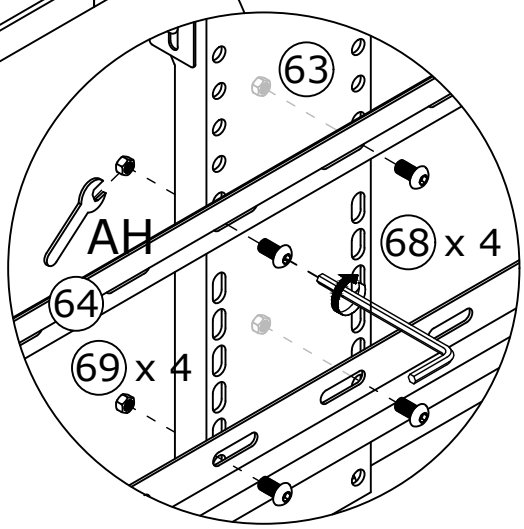

100

AG x 1	AK x 4	AL x 4	70 x 1	
			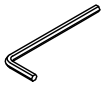	
M6	Ø 6 x 40mm	M6	M4	

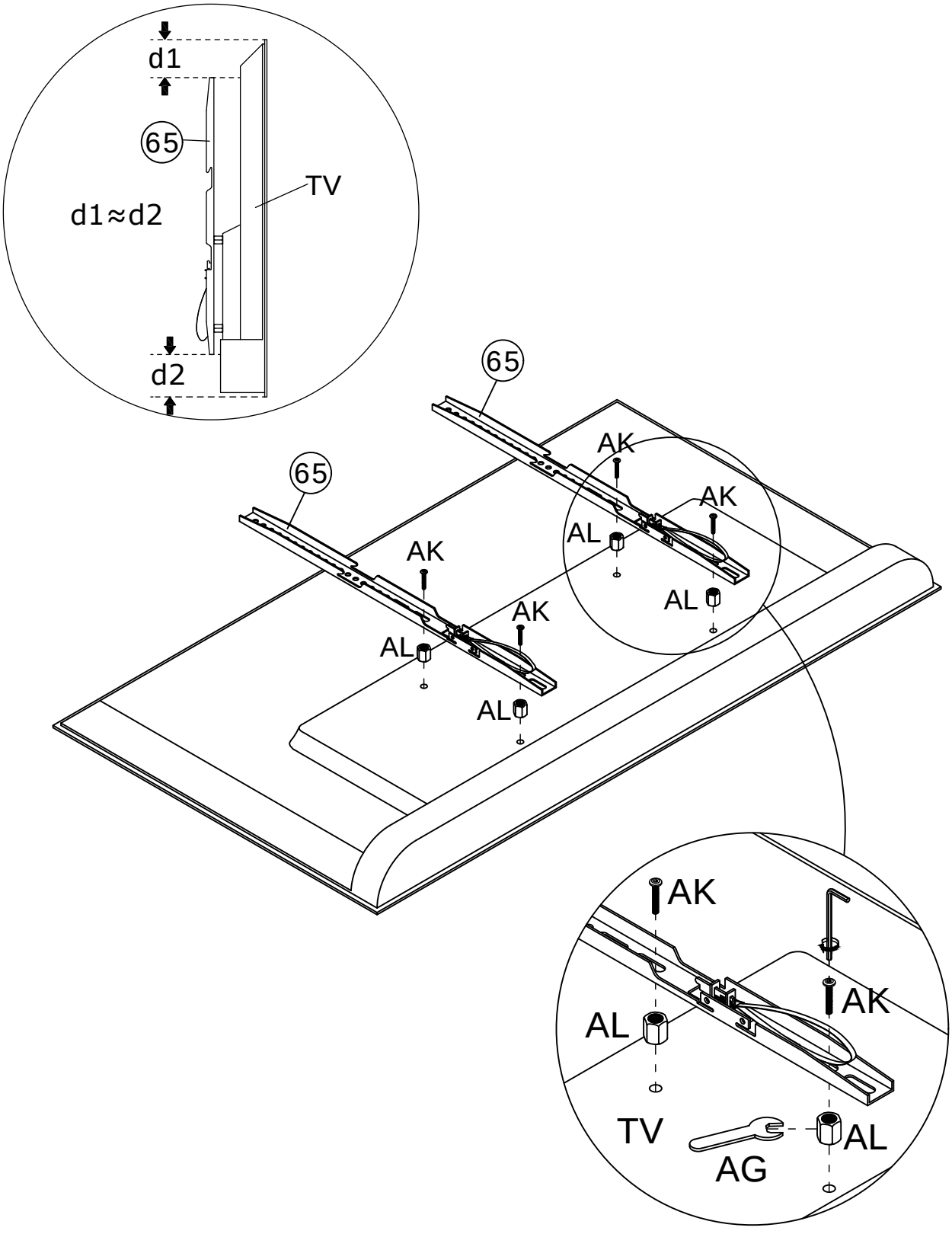

101

Place the TV **centrally** onto component (64).

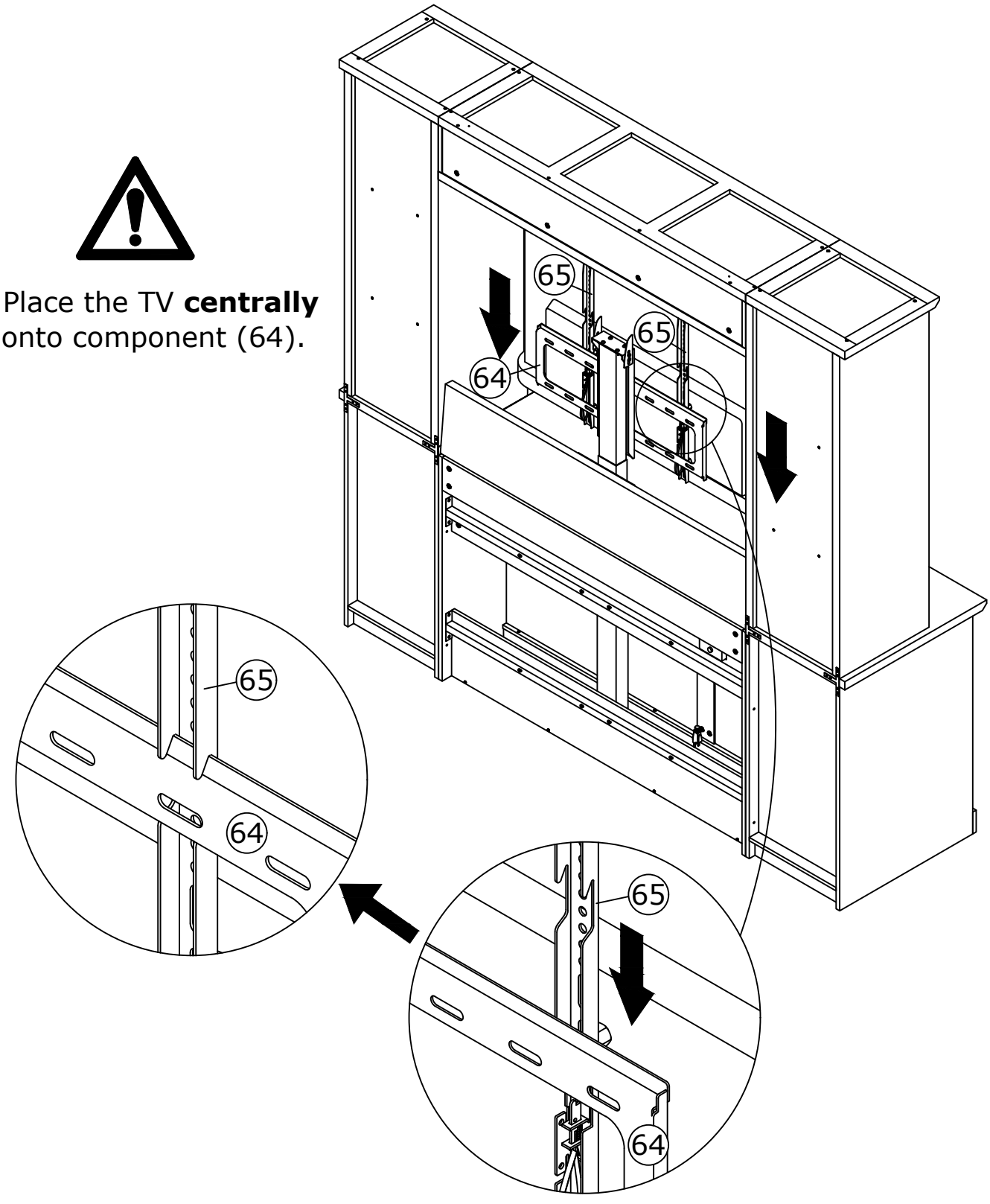

102

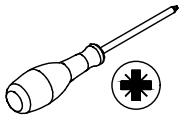

Determine the mounting height of the TV according to the mounting height of Component (64). See the figure for height requirements.

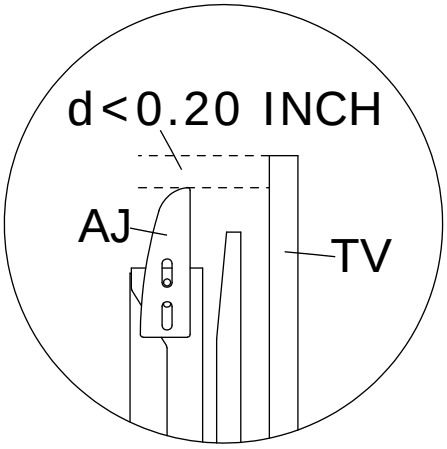

OR

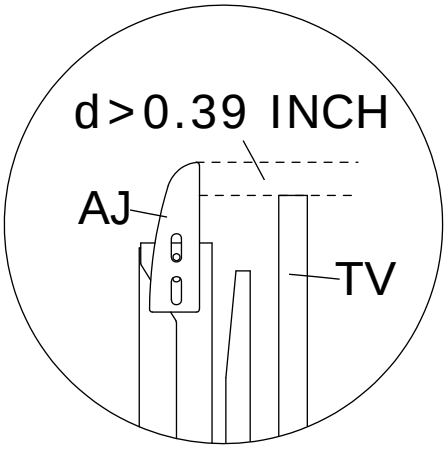

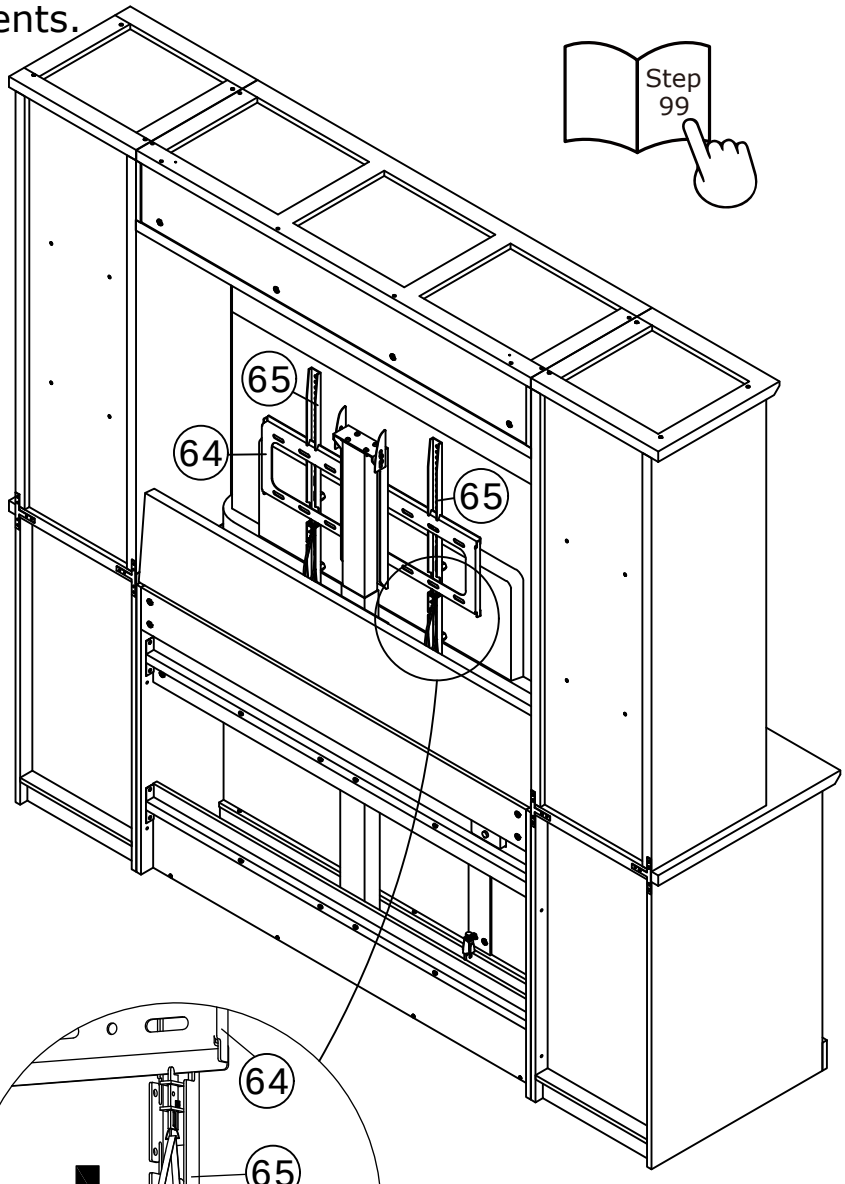

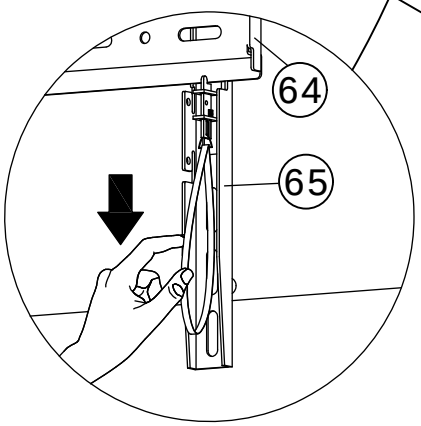

103

Lower component (61) to its minimum height.

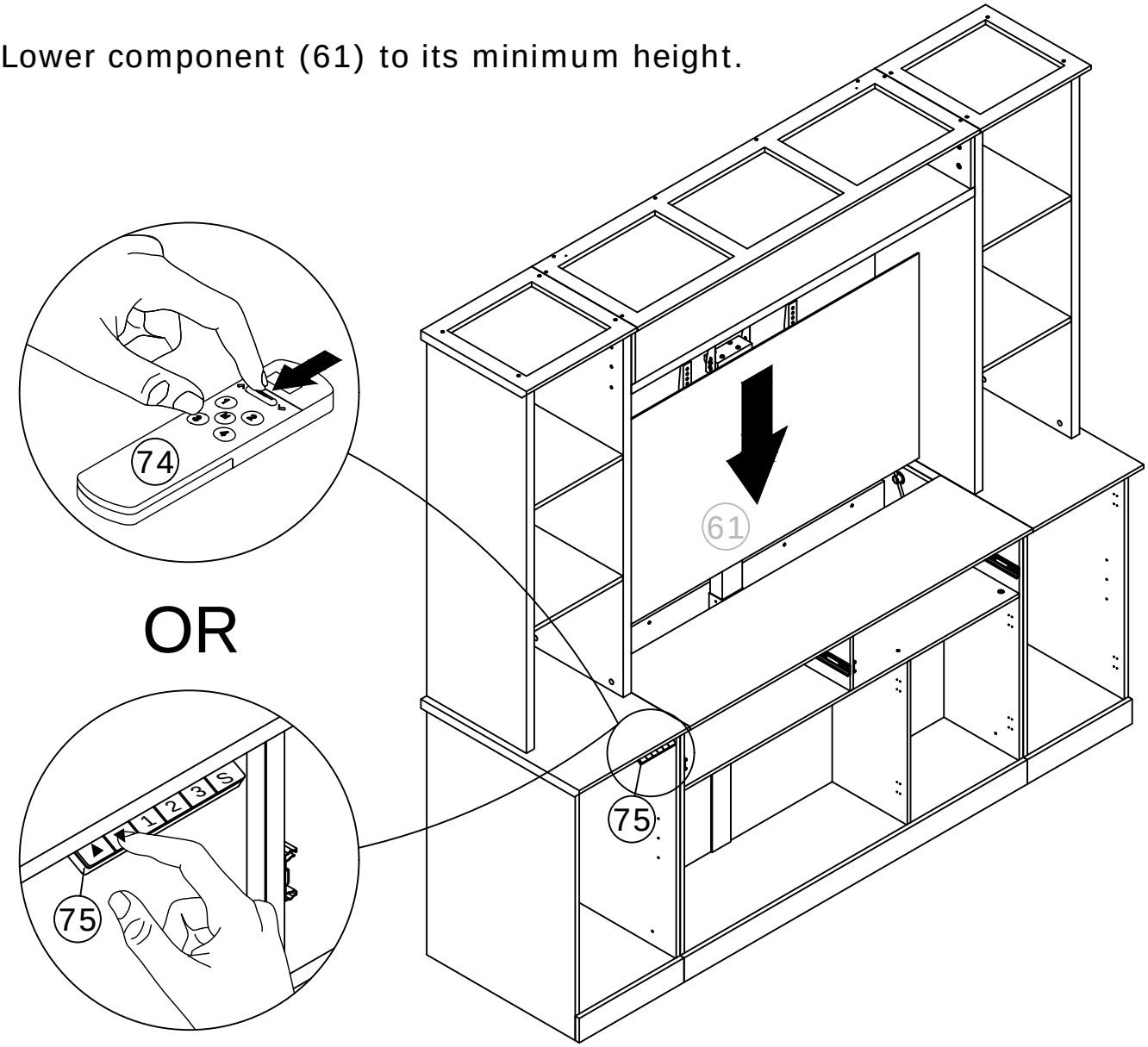

104

M x 2	V x 2	
	 Ø 3.5 x 14mm	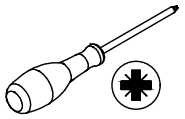



U	V
 Ø3.5 x 12mm	 Ø3.5 x 14mm

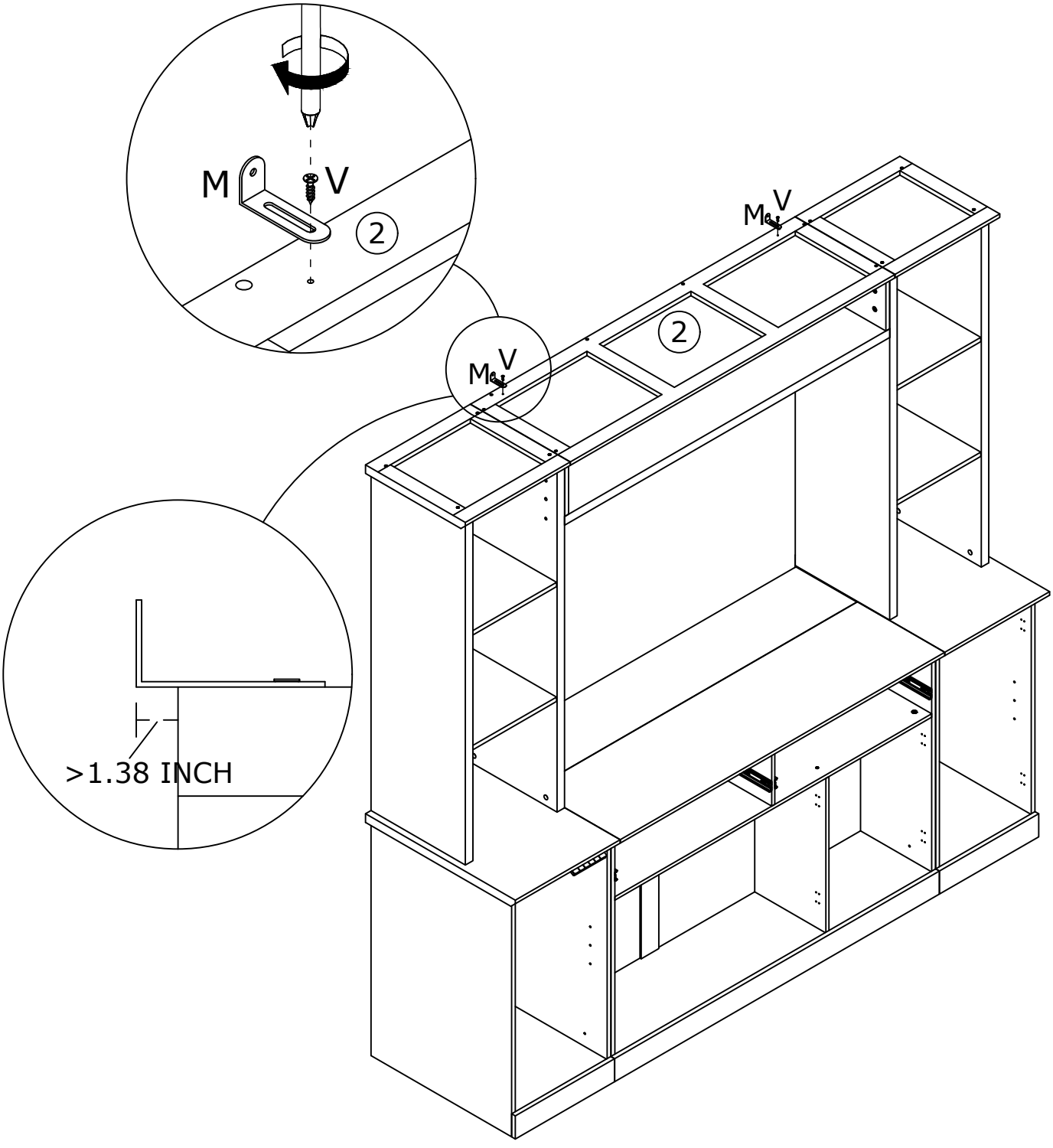

105

N x 2	P x 2	
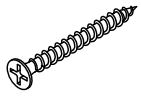 Ø 3.5 x 35mm	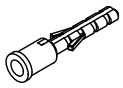	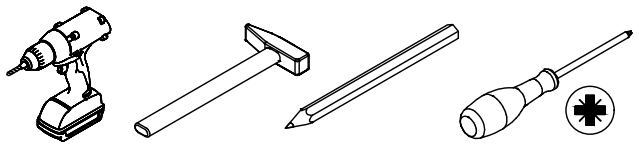

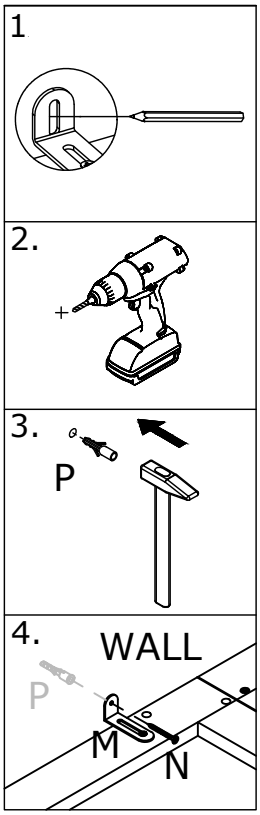

106

S x 4	V x 8	
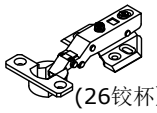 (26铰杯)	 Ø 3.5 x 14mm	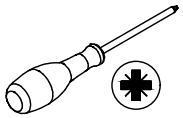

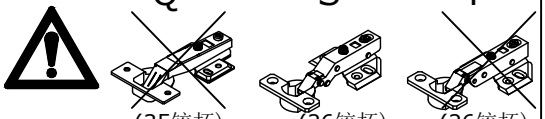

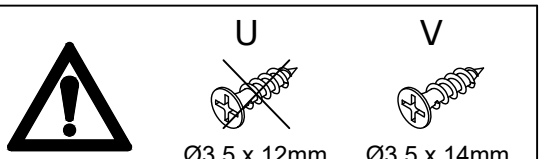

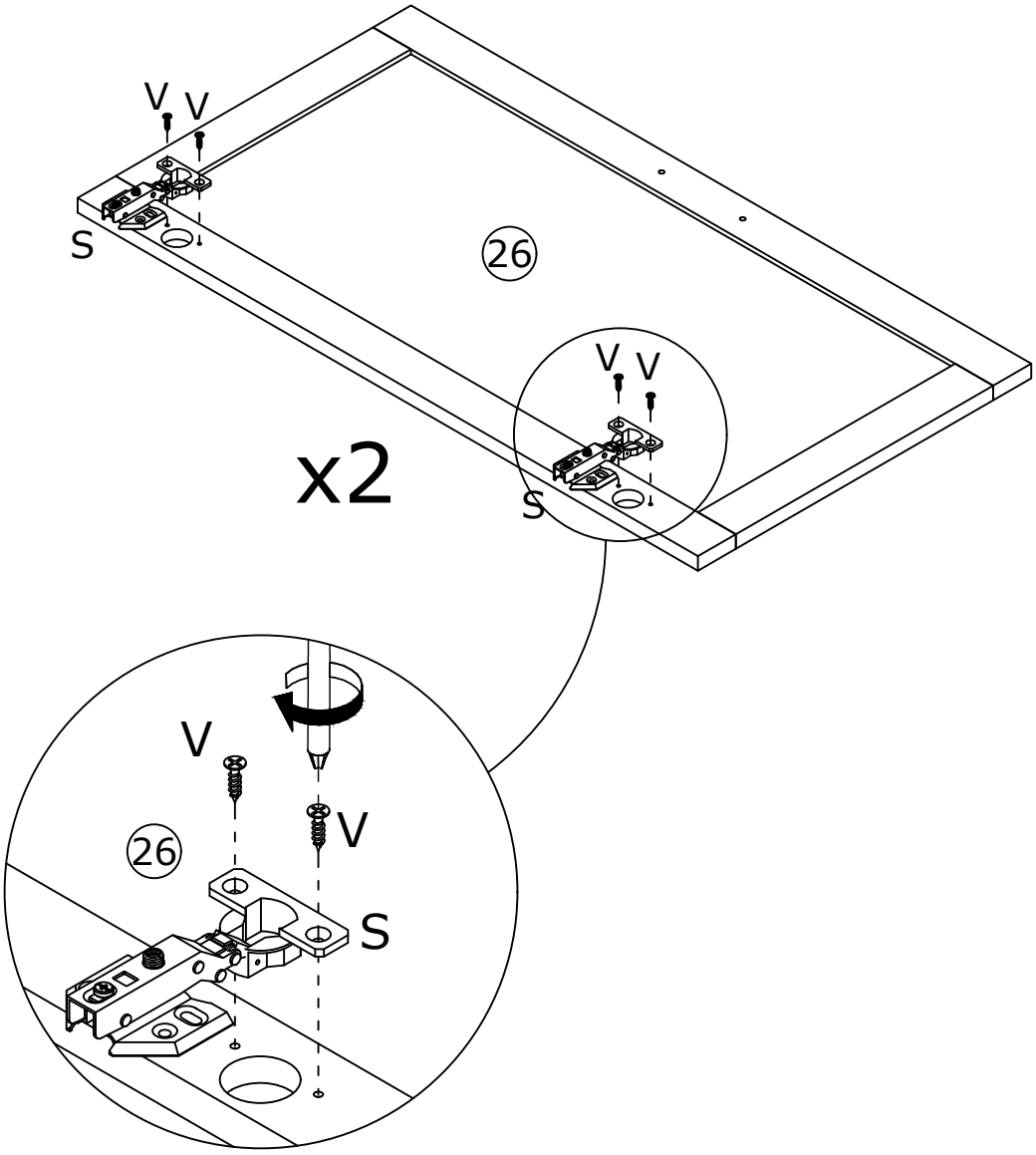

107

V x 16



Ø 3.5 x 14mm

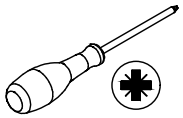



U



Ø3.5 x 12mm

V



Ø3.5 x 14mm

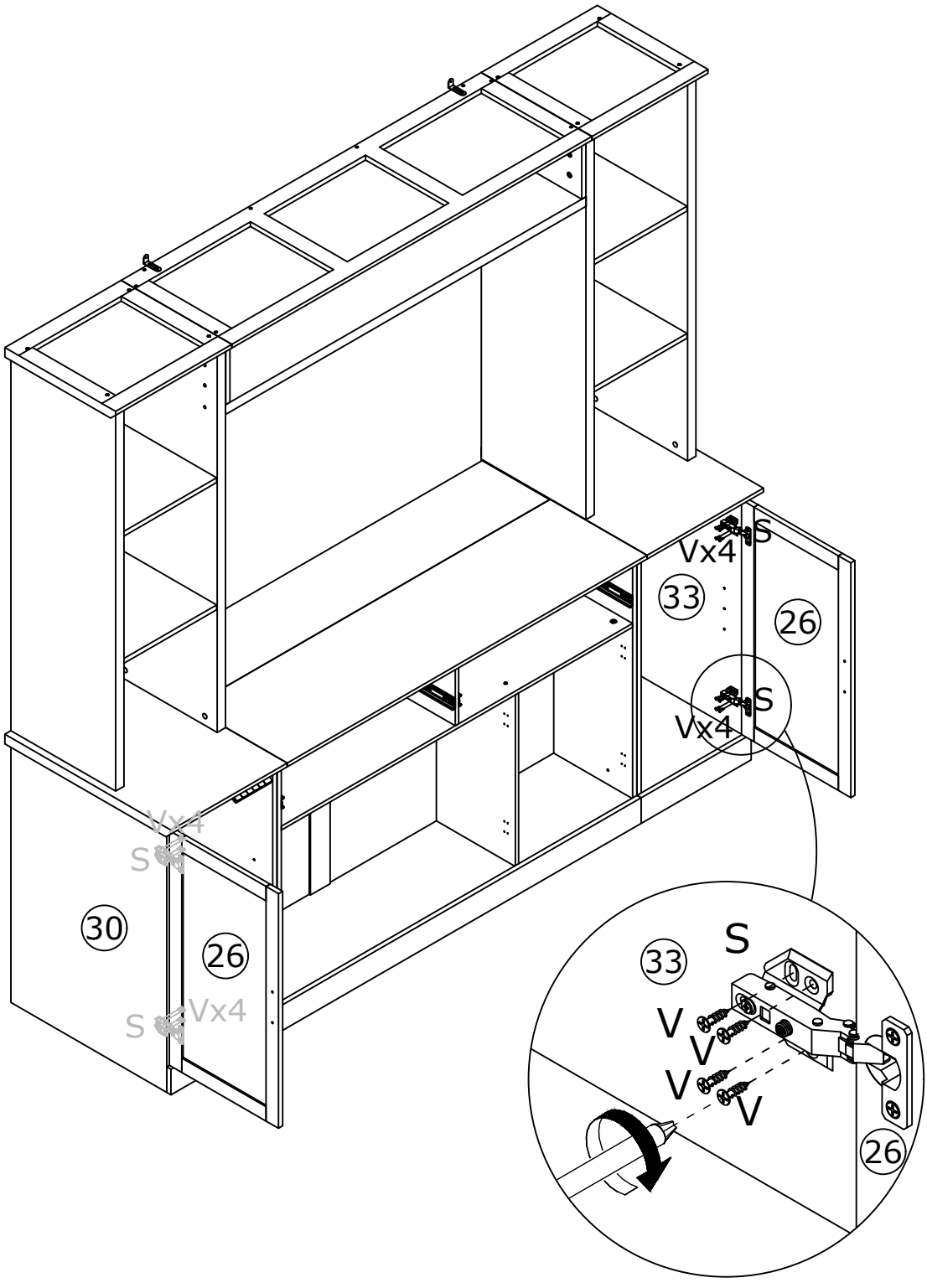

108

G x 2	H x 4	
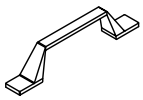	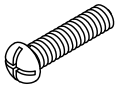 Ø 4 x 18mm	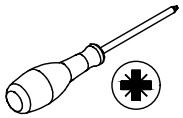

	H	J
	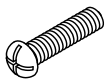 Ø4 x 18mm	 Ø4 x 8mm

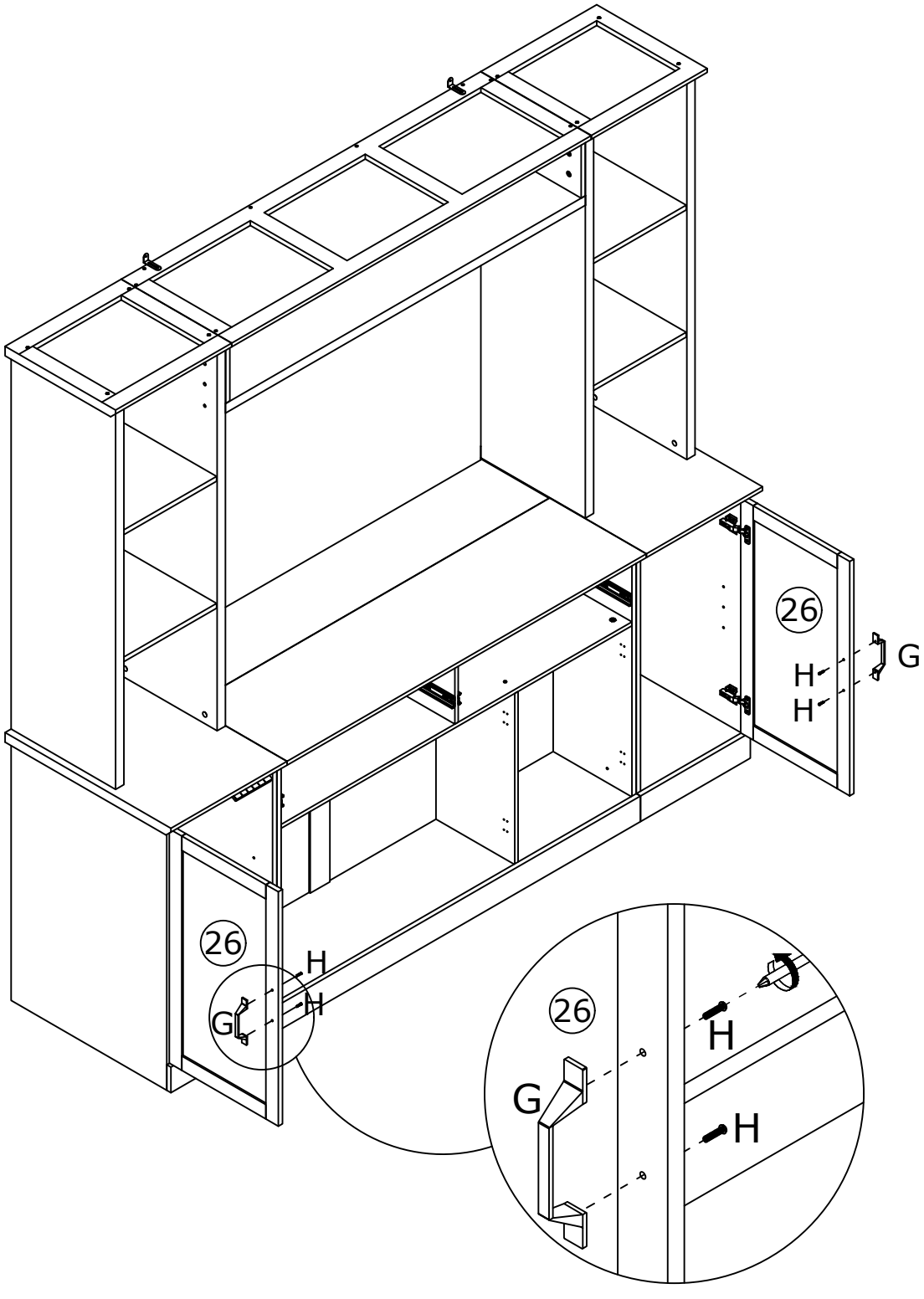

109

D x 8

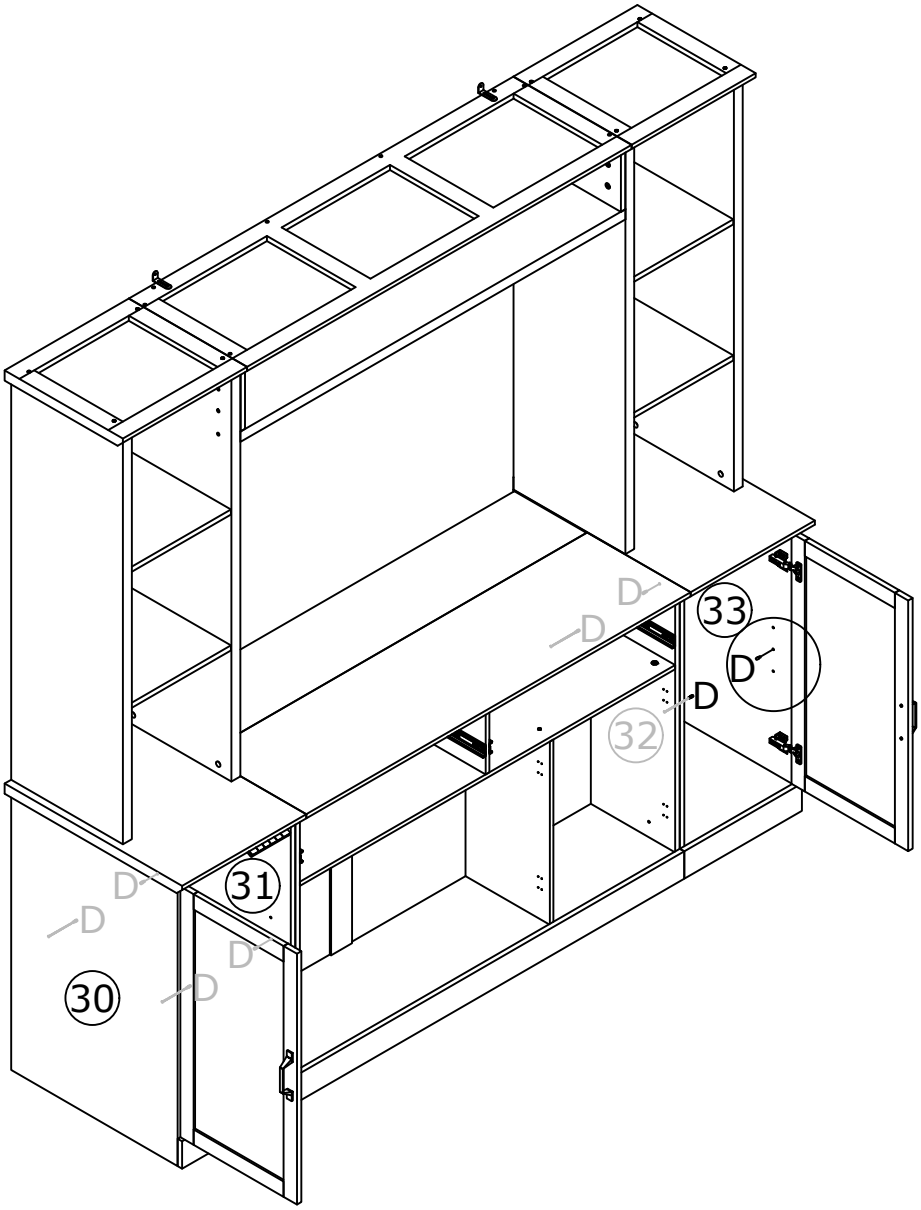

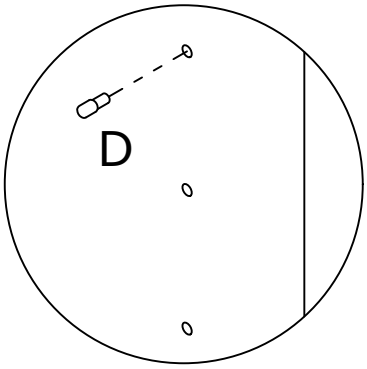

OR

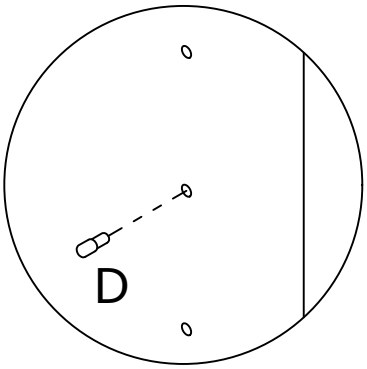

OR

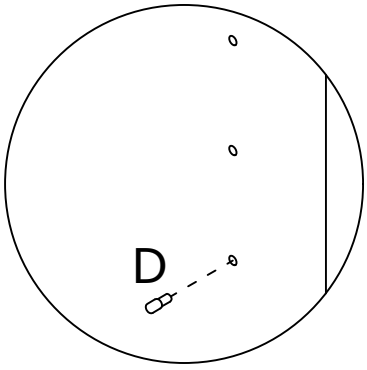

110

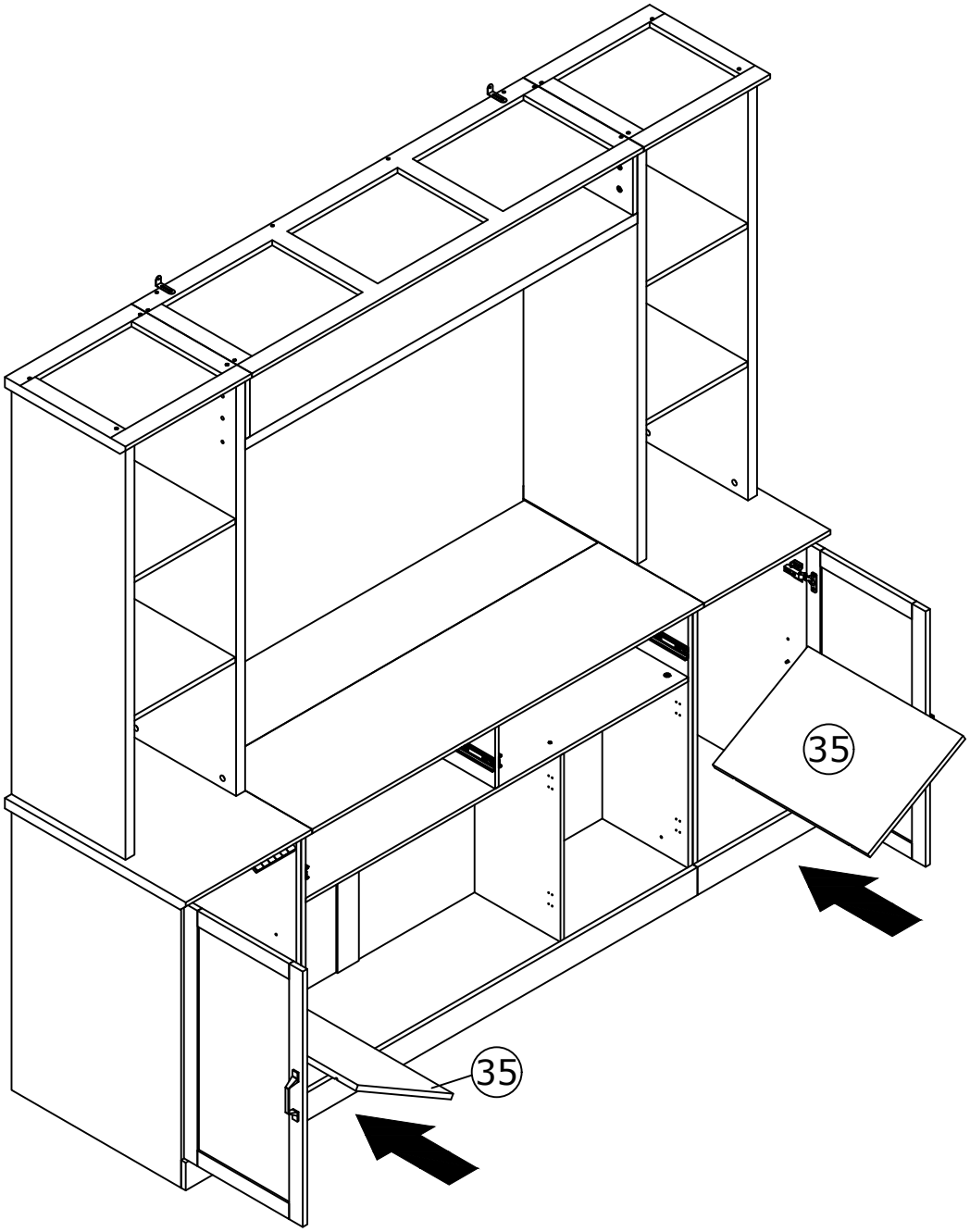

Tilt panel 35 to a proper angle.

111

S x 4	V x 8	
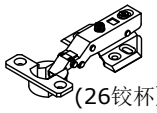 (26铰杯)	 Ø 3.5 x 14mm	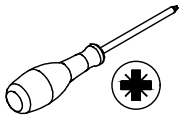

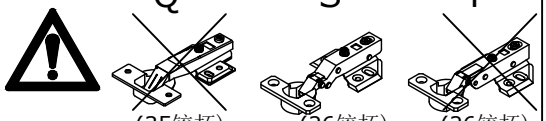

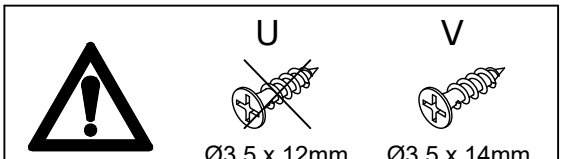

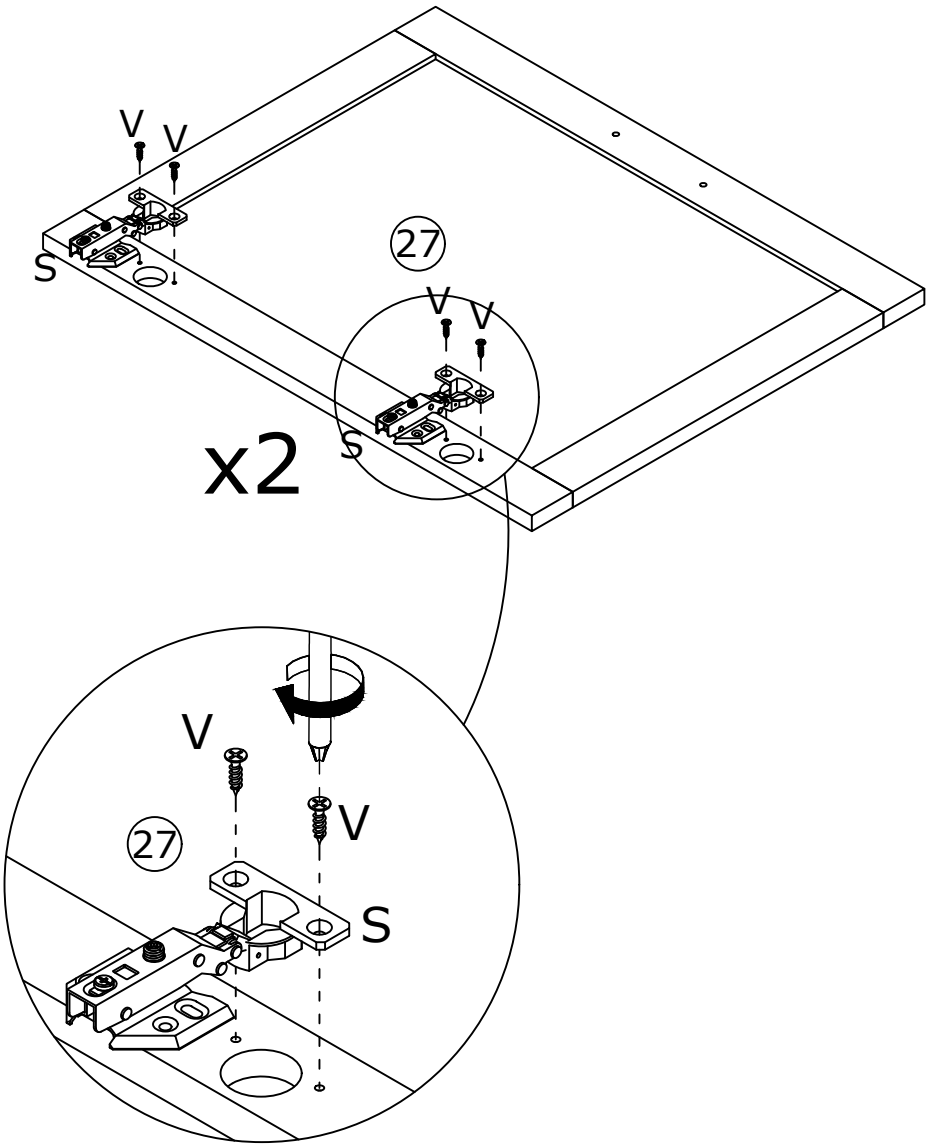

112

V x 16



Ø 3.5 x 14mm

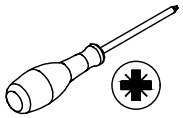



U



Ø3.5 x 12mm

V



Ø3.5 x 14mm

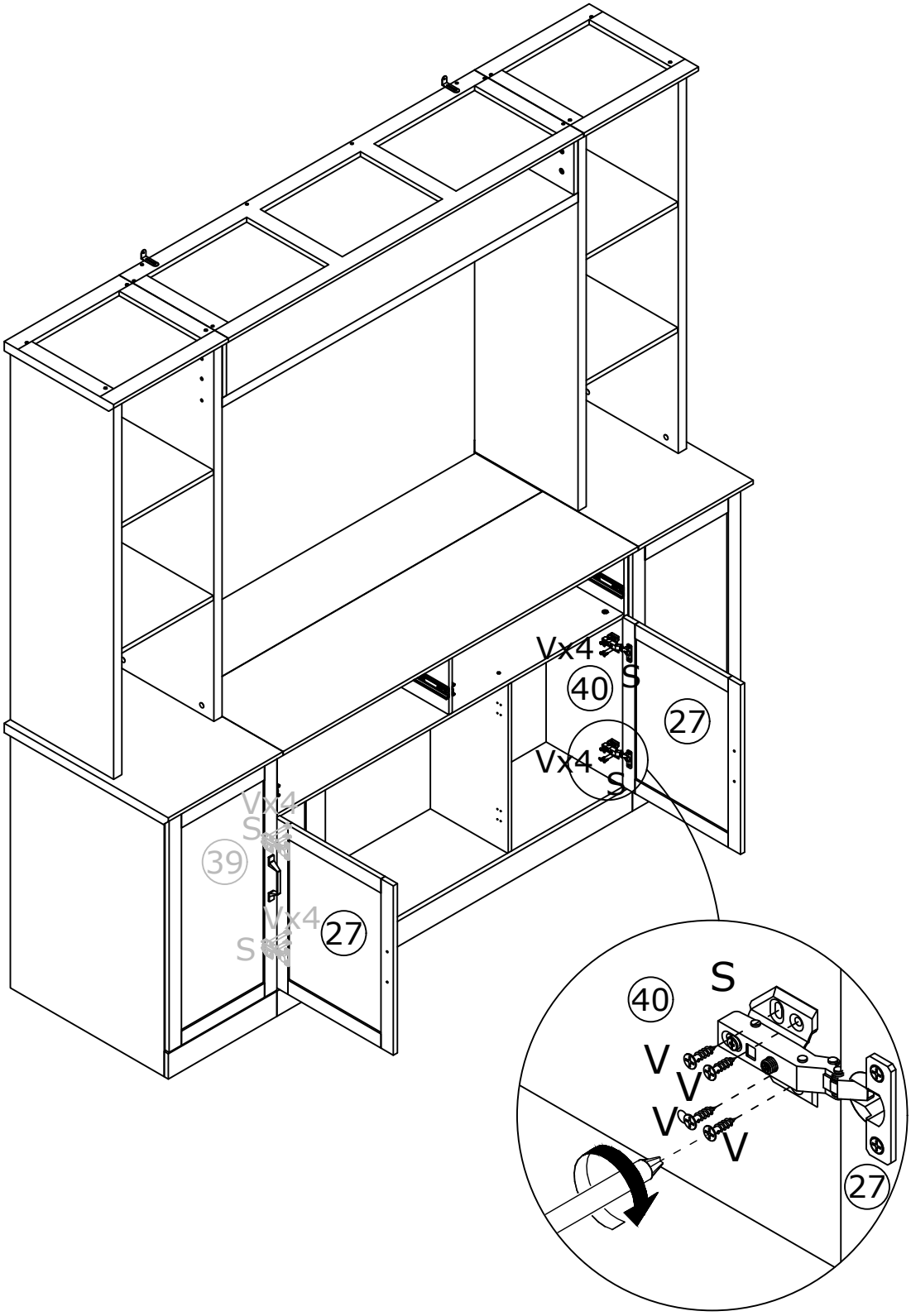

113

G x 2	H x 4	
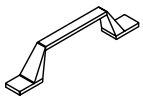	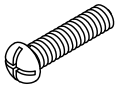 Ø 4 x 18mm	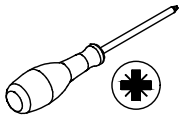

	H	J
	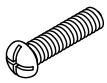 Ø4 x 18mm	 Ø4 x 8mm

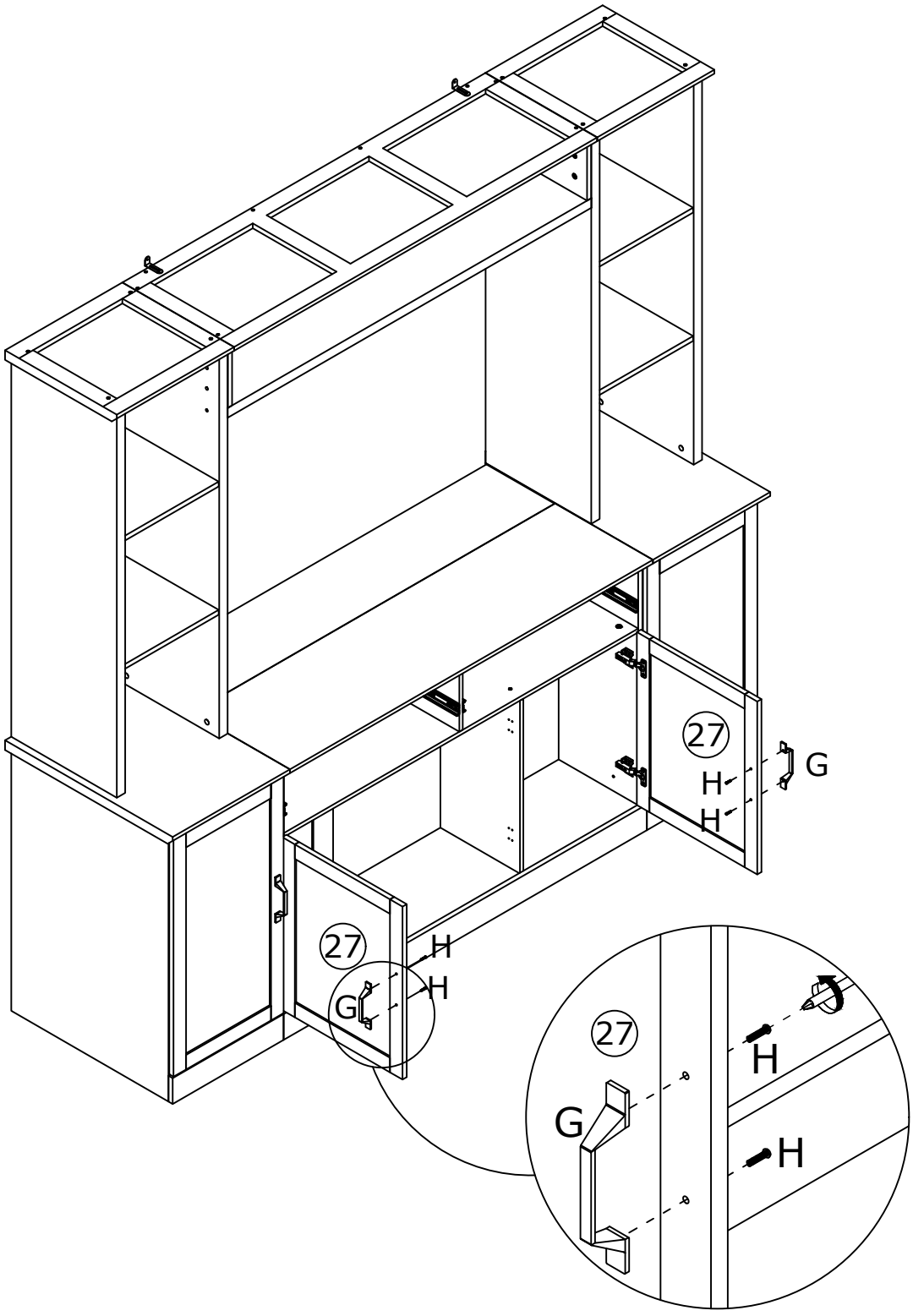

114

T x 2	U x 4	
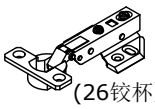 (26铰杯)	 Ø 3.5 x 12mm	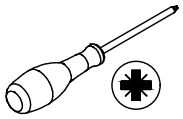

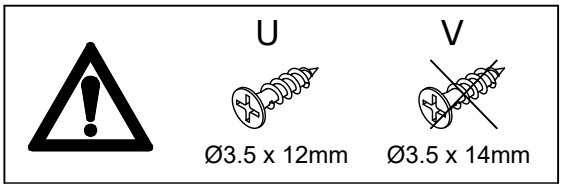

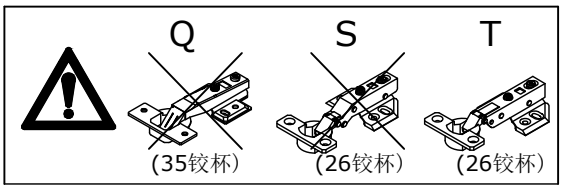

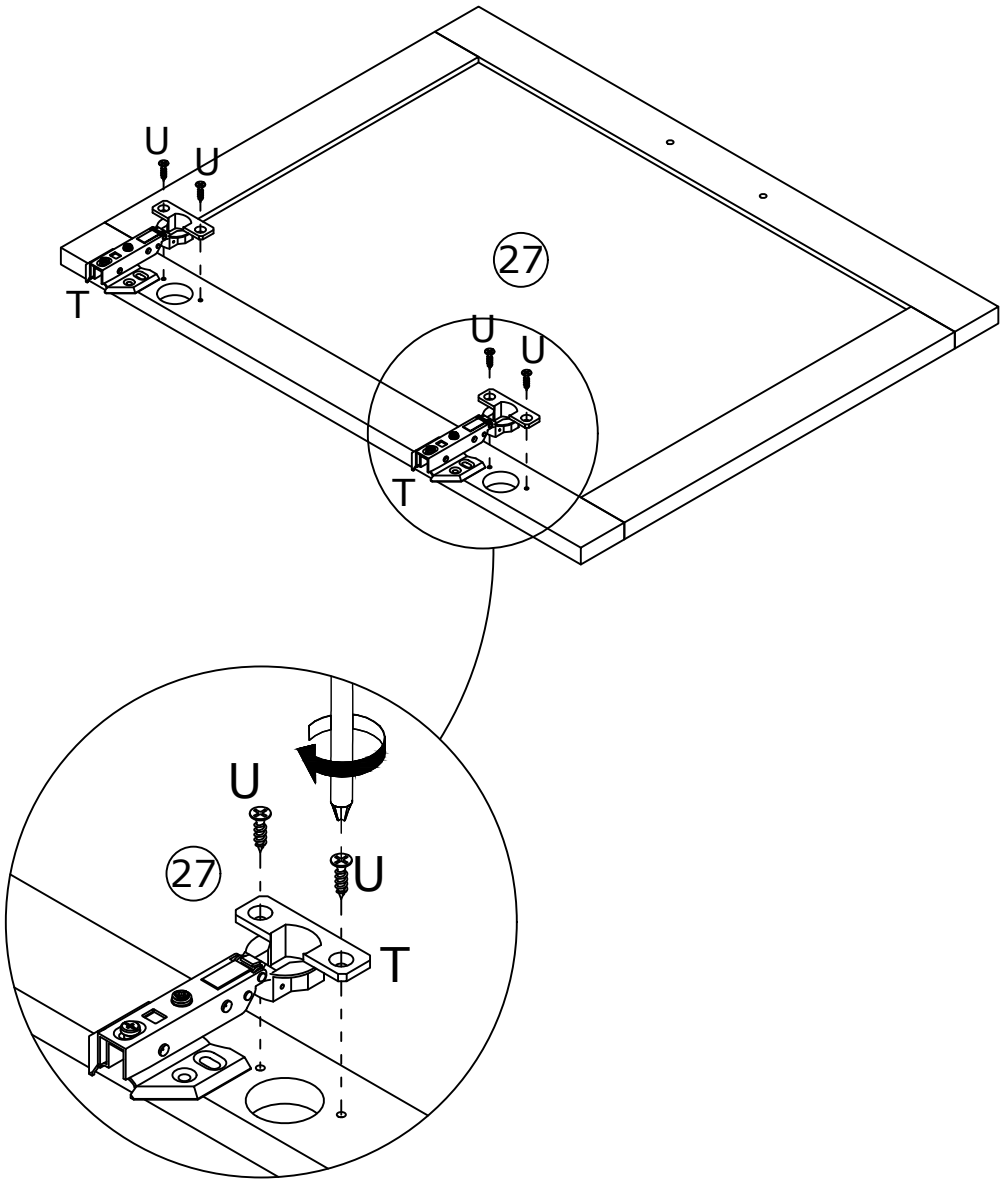

115

U x 8



Ø 3.5 x 12mm

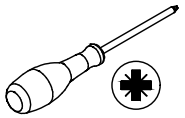



U



Ø3.5 x 12mm

V



Ø3.5 x 14mm

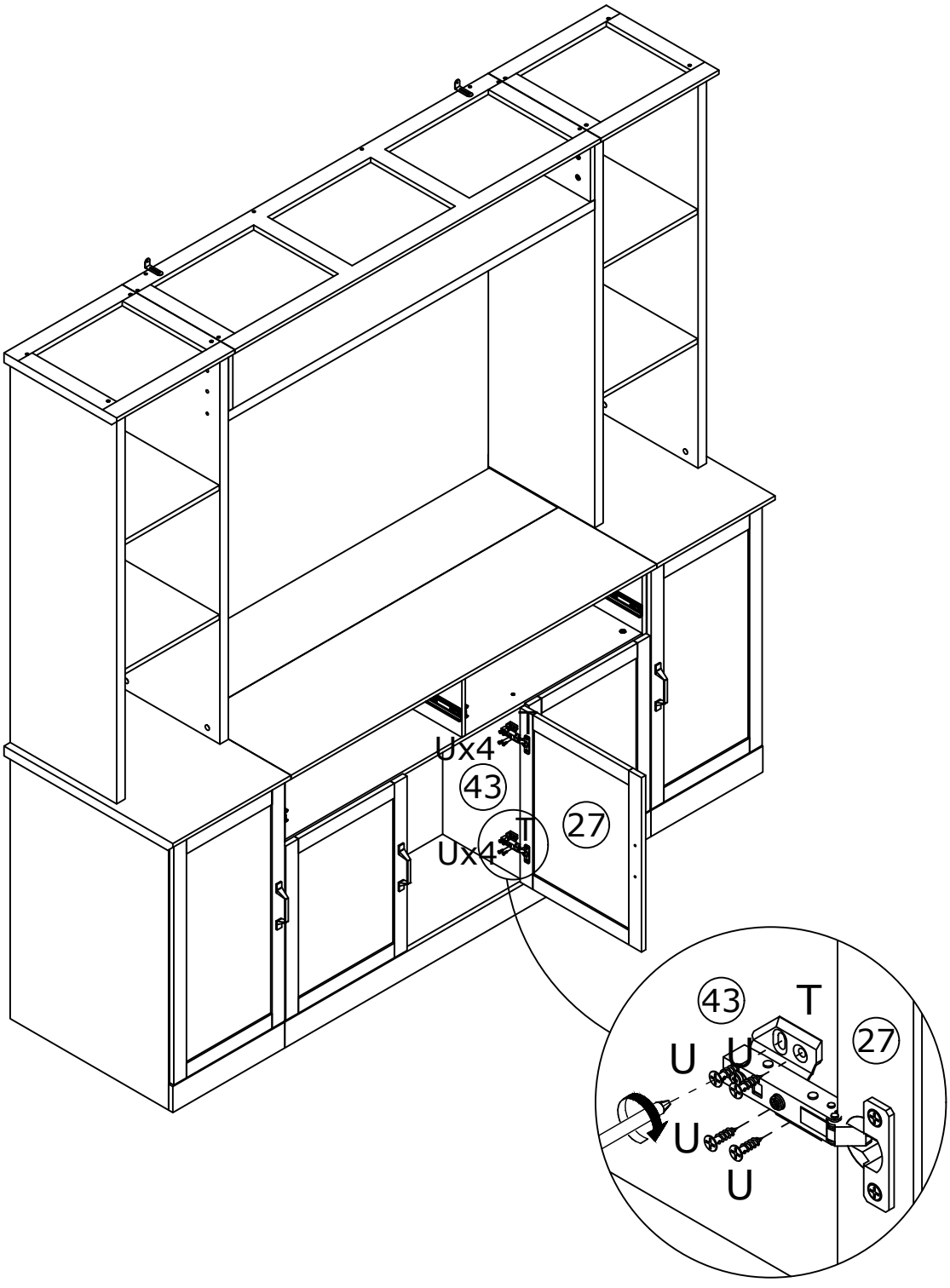

116

G x 1	H x 2	
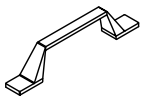	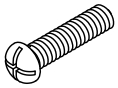 Ø 4 x 18mm	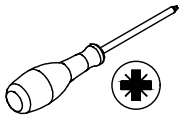



H	J
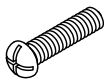 Ø4 x 18mm	 Ø4 x 8mm

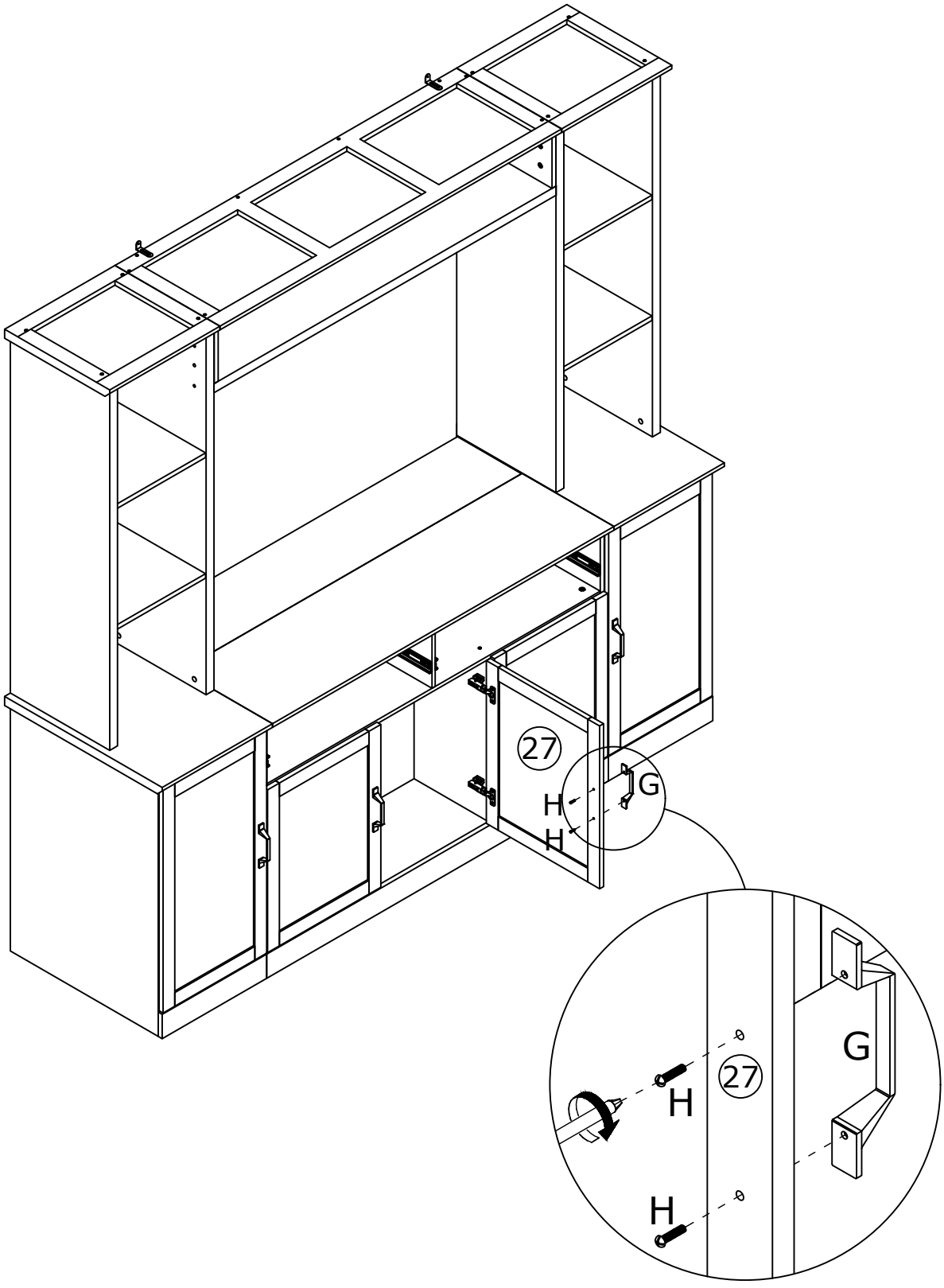

117

B x 10	C x 10	
	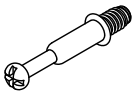 Ø 6 x 35mm	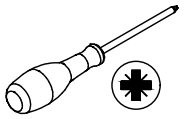

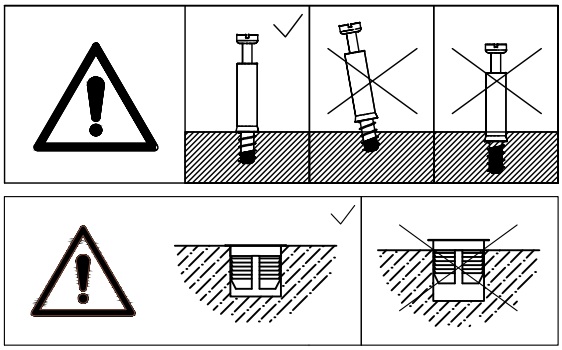

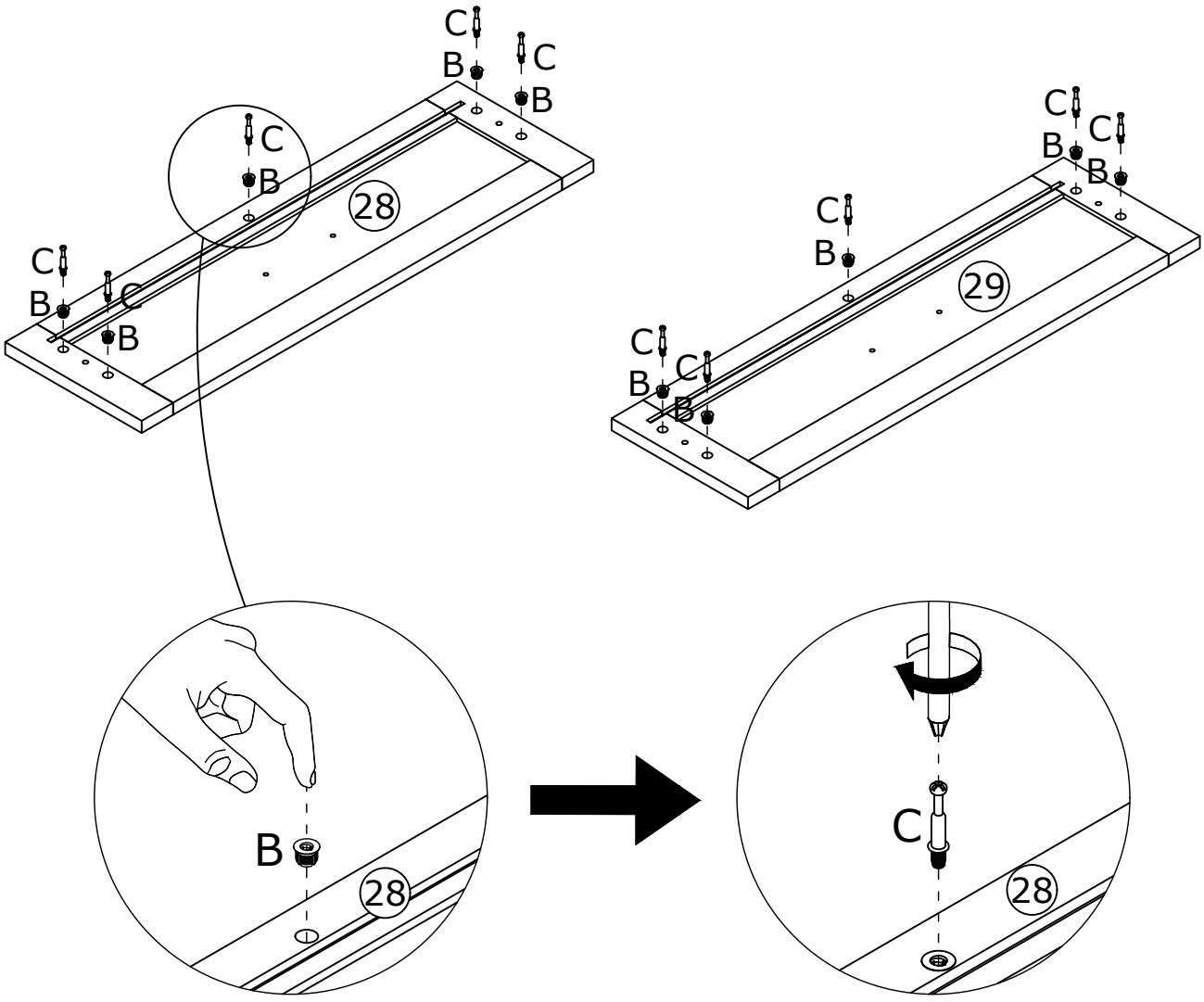

118

A x 10	F x 4	
 Ø 15 x 10mm	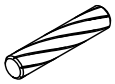 Ø 6 x 30mm	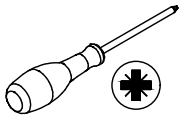

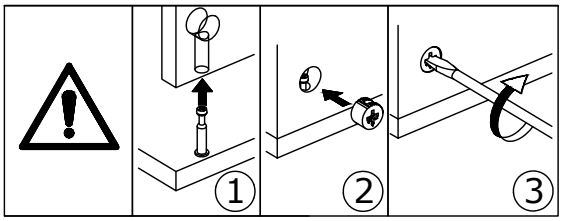

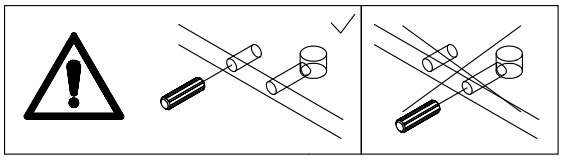

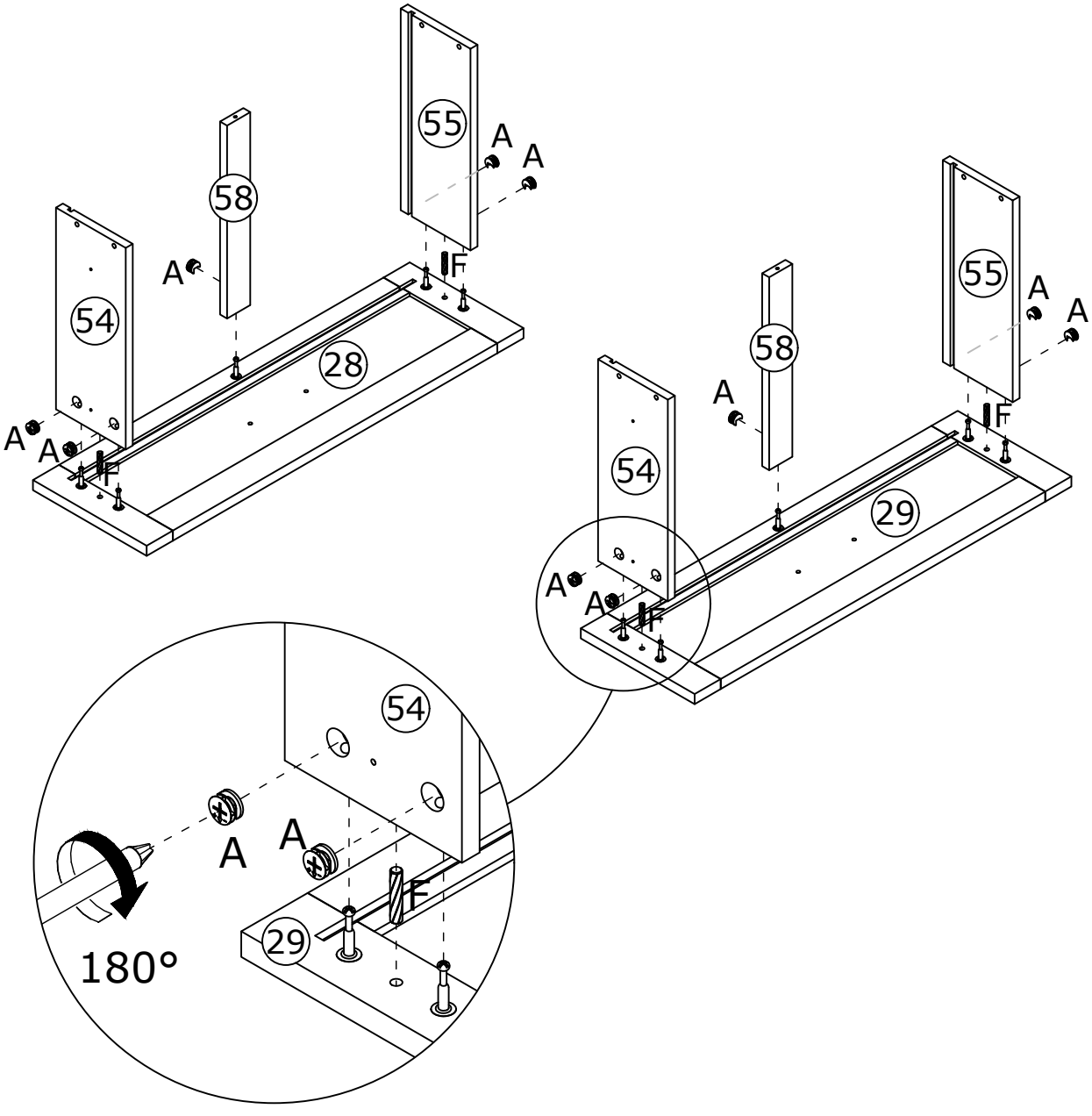

119

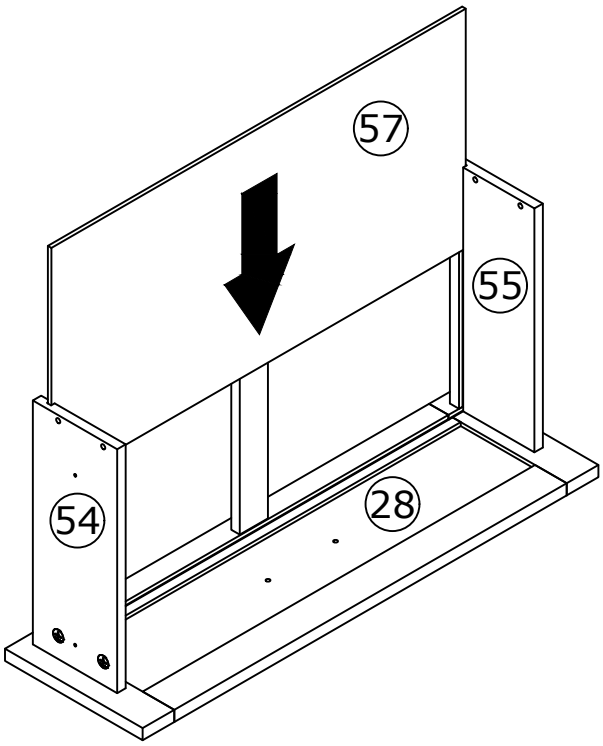

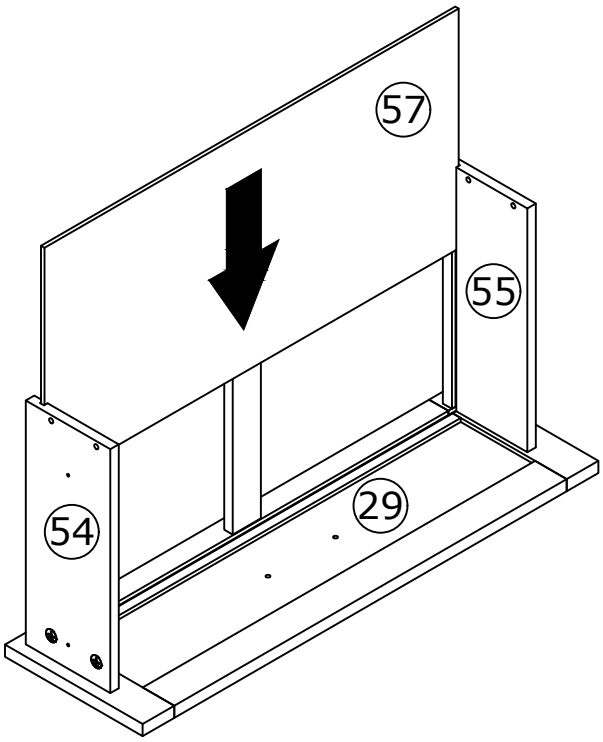

120

E x 10

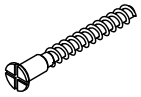

Ø 5 x 40mm

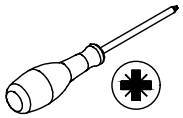

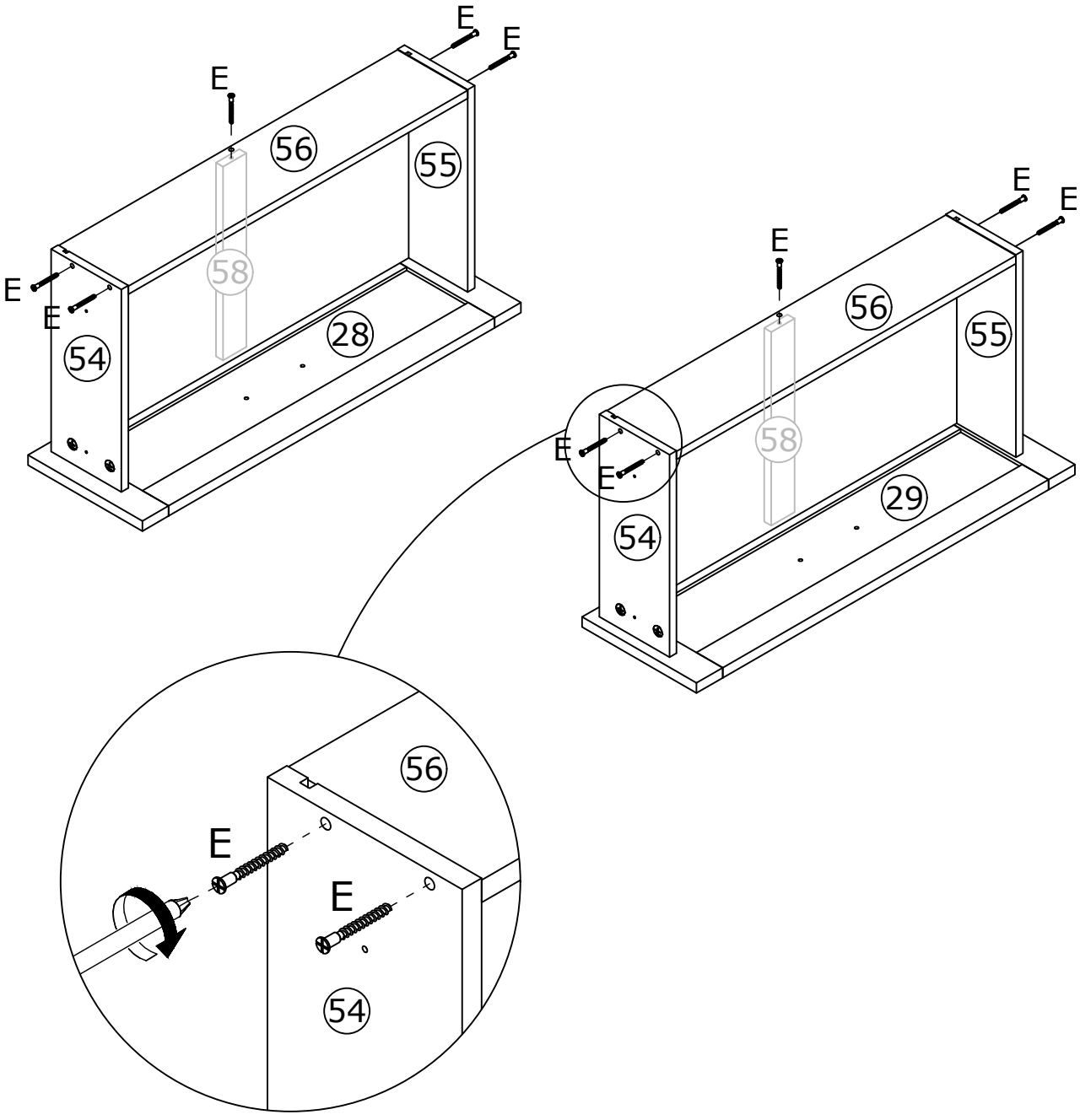

121

U x 8	W x 2	
	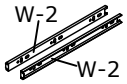	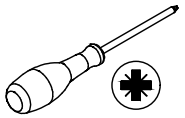
Ø 3.5 x 12mm	300mm	



U	V
	
Ø3.5 x 12mm	Ø3.5 x 14mm

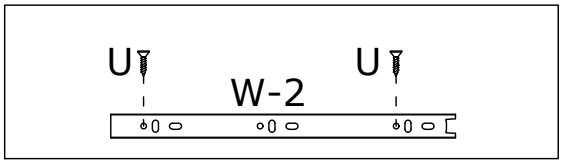

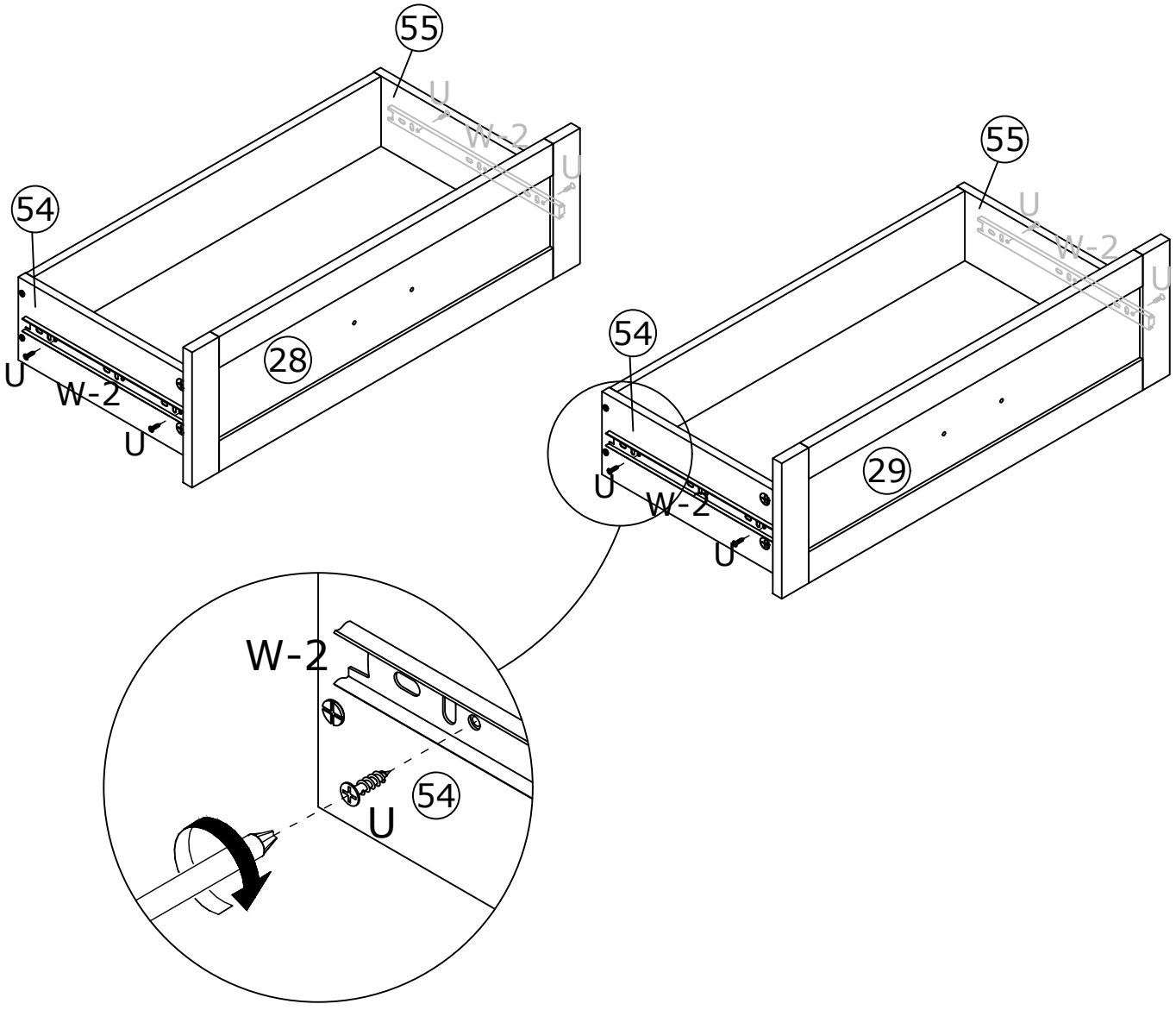

122

G x 2	J x 4	
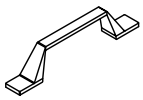	 Ø 4 x 8mm	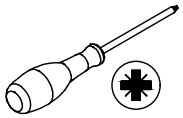



H

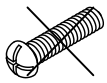

Ø4 x 18mm

J



Ø4 x 8mm

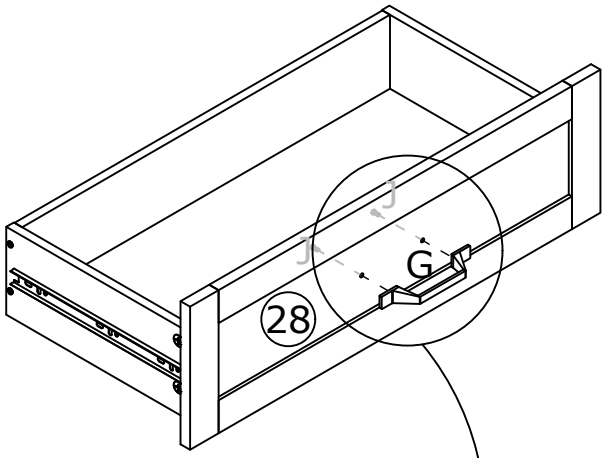

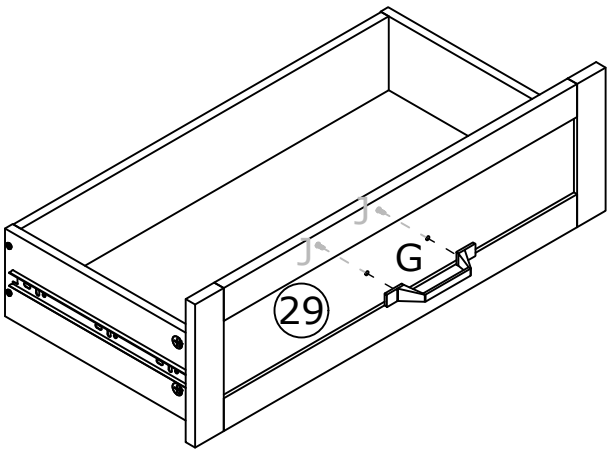

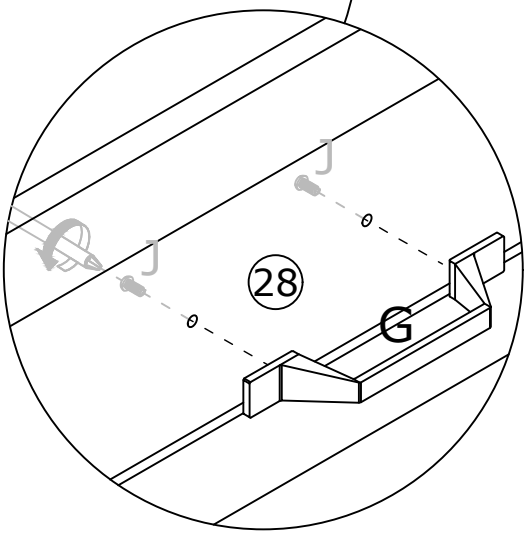

123

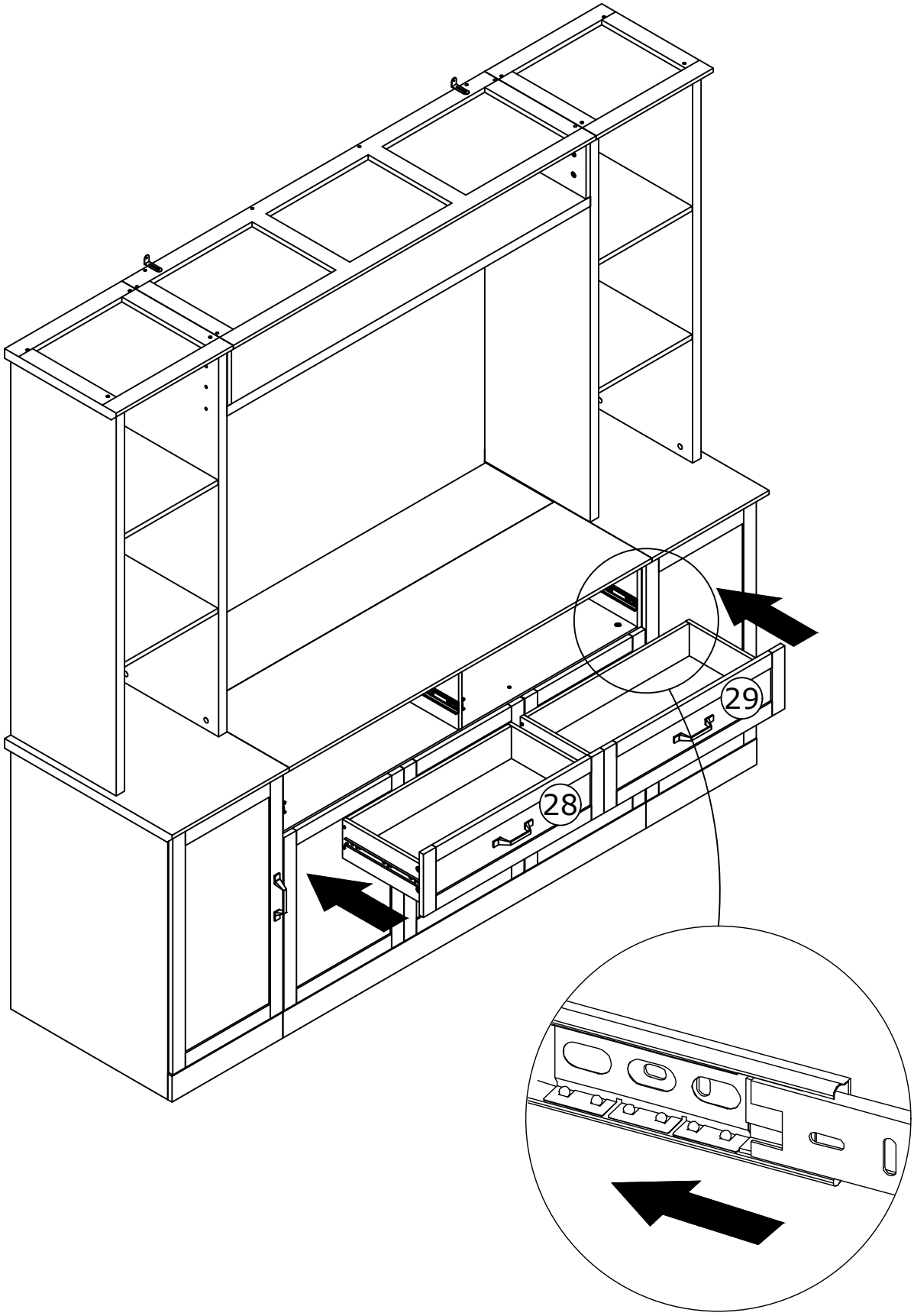

124

Y x 36

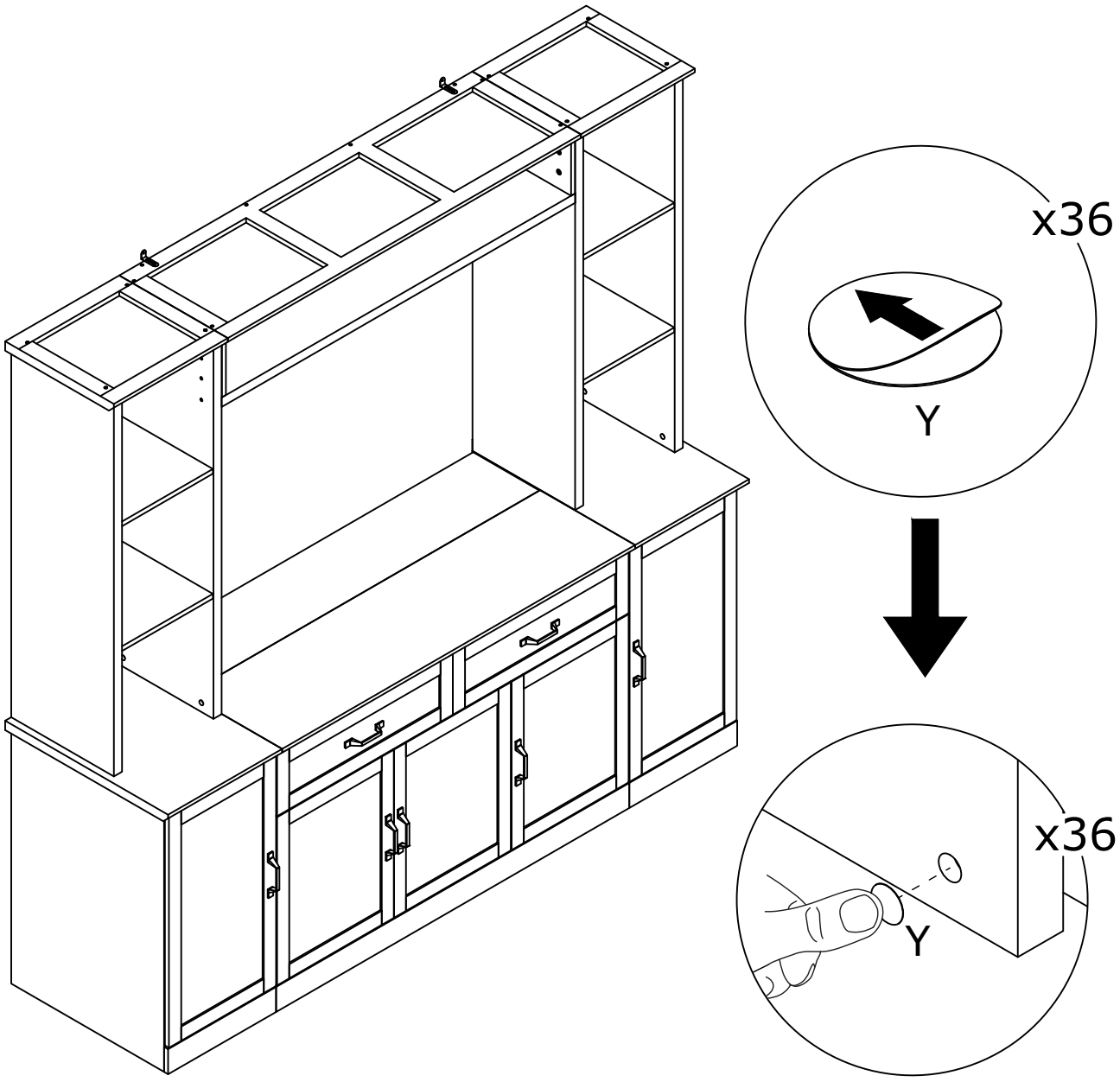

125

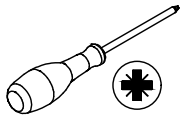

If doors are still not aligned if the hinges are properly correctly, please watch the video.

https://youtu.be/n0Lb36SoODM

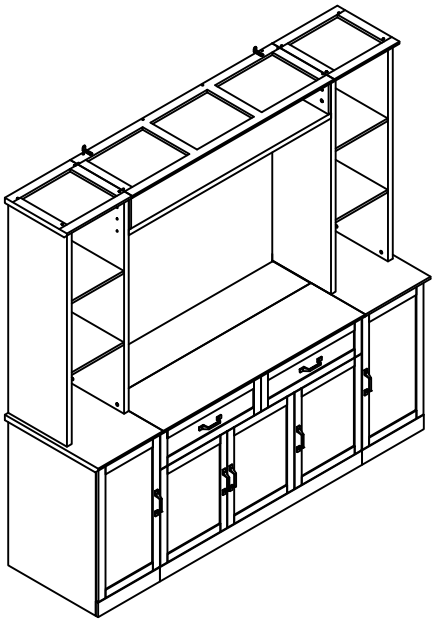

If there is misalignment after you install, adjust the screw to the best condition

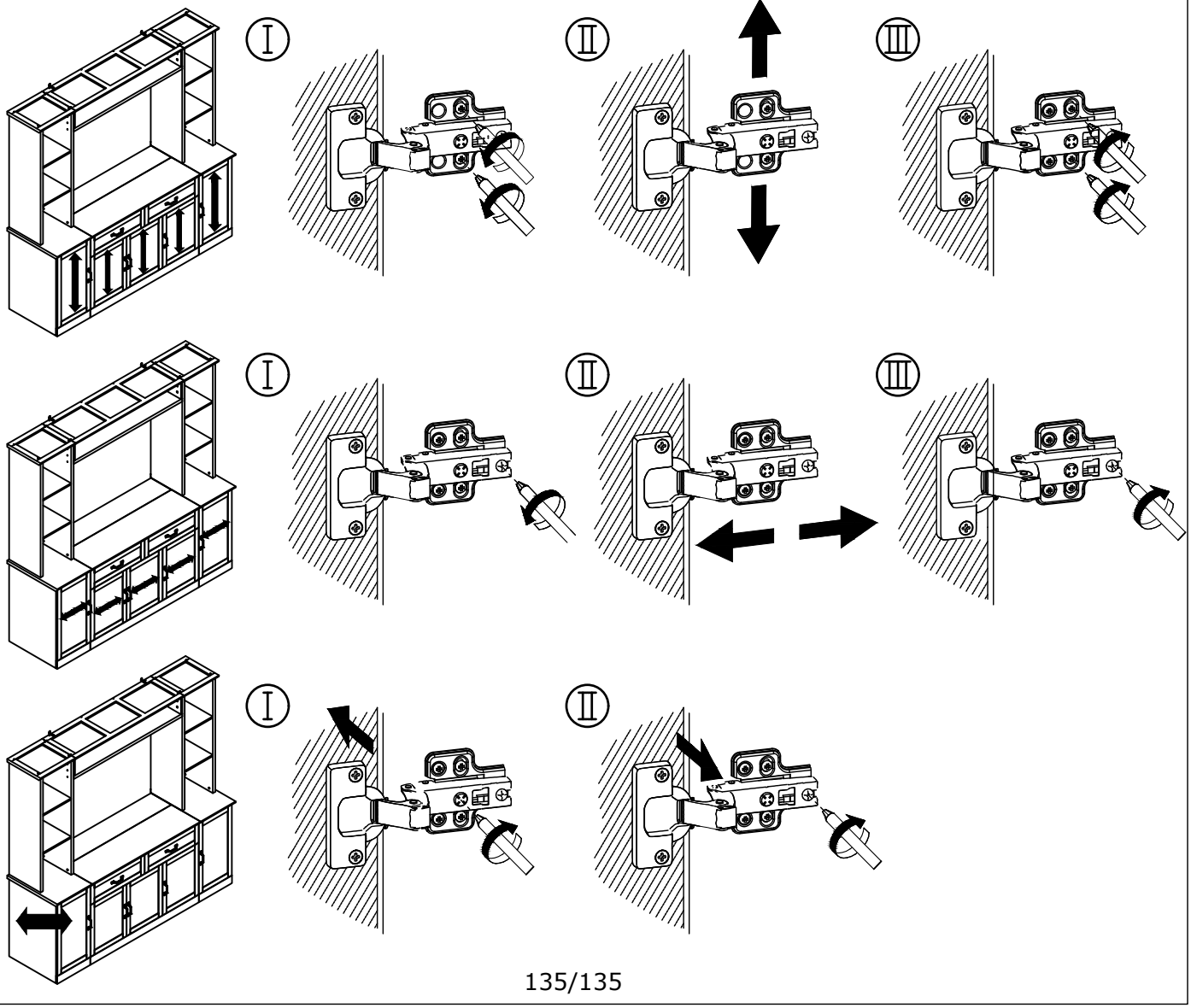

WARRANTY

WARRANTY CLAIMS

- There is a 30-day warranty for broken furniture or any other problems that do not work properly. The warranty will start from the date of purchase which must be verified by proof of purchase.

- Before making a claim, we may be able to answer your query, simply call us. Please leave your purchase order number, along with some details of the problem, if you want a replacement part. We will arrange within 48 hours. If there is out of stock, we will reply with a shipping date.

- The product must be used in accordance with the instructions provided. For health reasons.

- For other reasons, if the furniture needs to be returned, it must be cleaned and dried and operated within 30 days of receipt.

Type of Warranty Claim

- Failure to follow the furniture instructions will invalidate the warranty. Attention please.

- Does not include damage during installation, but includes damage during transportation.

Scope of responsibility

- Shall not bear any responsibility for misuse or user damage and / or loss of parts during the installation of furniture.

- After using, the damage and scratches of the furniture are not covered by the warranty.

The Warranty Relates to All Bought in The Us and Covers The Following Areas

- Sheet parts: 1 month from the date of purchase.

- Electrical parts: 1 month from the date of purchase.

RETURNS

CHANGED YOUR MIND AND NEED TO RETURN YOU ITEM?

PLEASE FOLLOW THE BELOW INSTRUCTIONS:

- If you have purchased and have simply changed your mind, follow the retailer's instructions for returns.

DEFECTIVE ITEMS

- If your item is defective in any way, i.e. it doesn't work but you can't identify why, in the first instance, please call us.

DAMAGED ITEMS

- If you receive an order with obvious shipping damage from the retailer, then we suggest the delivery is refused. If the delivery has been accepted and then shipping damage is found, please follow the specific instructions advised by the retailer.
  In all circumstances please save all packaging material and paperwork for the order. Please be aware that if you dispose of packaging material or attempt to return the merchandise without contacting the fulfiller, you jeopardise your chances of making a claim, and you may not receive a credit for the return.

AFTER-SALES CONTACT


adelahu@fufugaga.com


208-820-0068