ASSEMBLY INSTRUCTIONS

BATH VANITY-CABINET

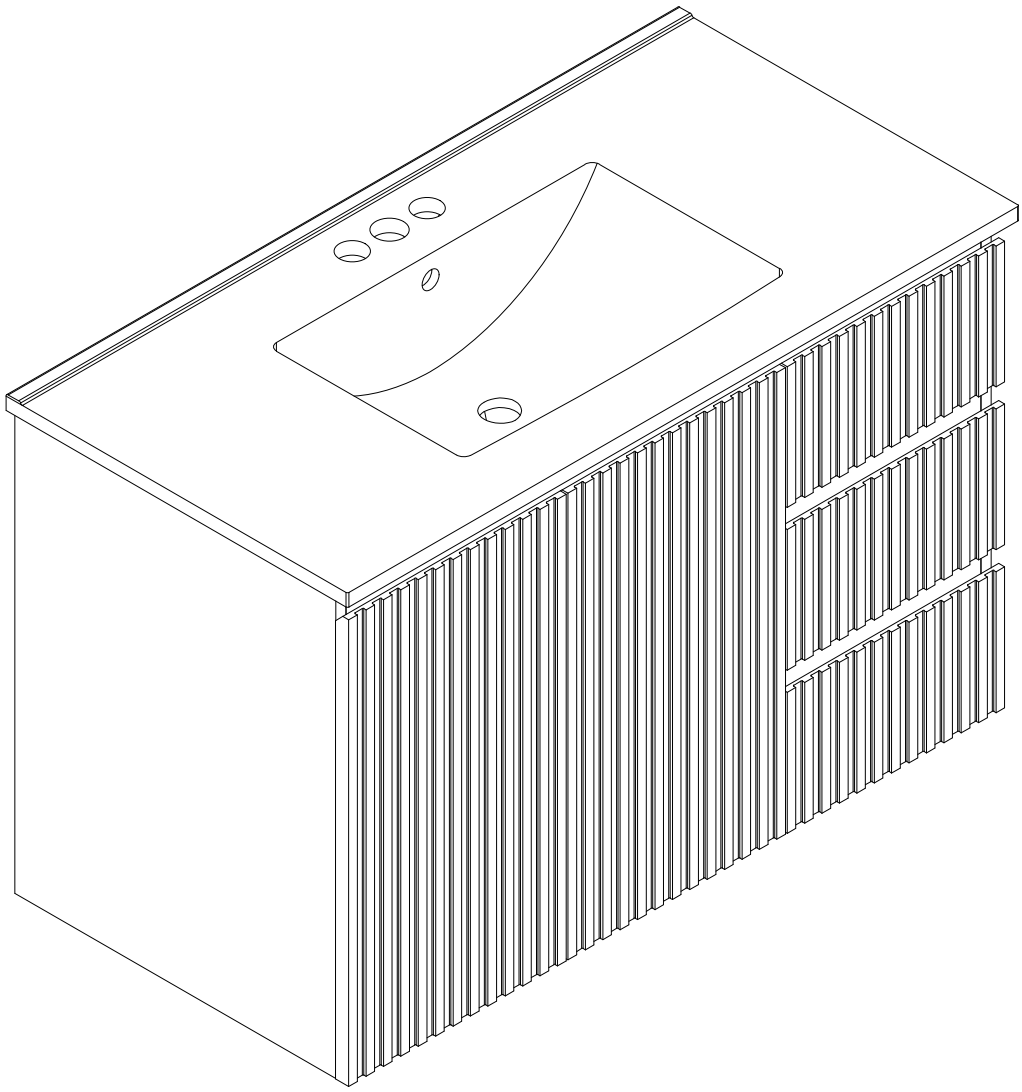

Thank you for purchasing this quality product. Be sure to check all packing material carefully for small parts which may have come loose inside the carton during shipment. Separate, identify and count all parts and hardware.
Compare with the parts list to be sure all parts are present.
DO NOT TIGHTEN SCREWS UNTIL COMPLETELY ASSEMBLED

* Use of power tool to assemble this product will invalidate any claim and damage this product making unsafe !!!
* Please assemble on a clean soft surface to avoid damage.

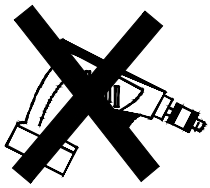

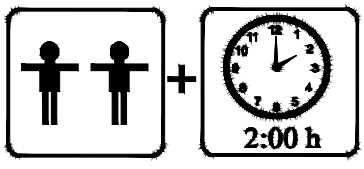

Tools Required

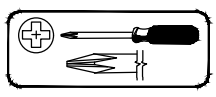
(Not included)

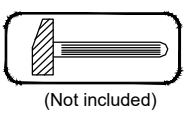
(Not included)

IMPORTANT:
PLEASE READ INSTRUCTION BEFORE STARTING THE ASSEMBLY

Before Installation

Important – Please read these instructions fully before starting assembly

Thank you for purchasing this quality product. Be sure to check all packing materials carefully for small parts, which may have come loose inside the carton during shipment. Identify and count all items according to the PARTS LIST and/or HARDWARE LIST shown below. Check you have all the components and tools listed on the following pages.

- We recommend that you assemble this product with the assistance of another person; this will make the assembly easier, and will help eliminate damage to the product or injury to persons during assembly.
- Please do not over tighten screws or bolts until the assembly is completed.
- Keep children and animal away from the work area, small parts could choke if swallowed.
- Please put all parts on a non-abrasive floor before assembly,and follow the assembly steps to assemble your newly purchased product correctly and efficently.

Cam Lock Assembly Instructions

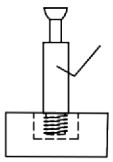
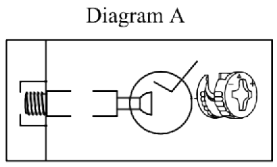

Insert Cam Bolt into hole as shown in diagram A.

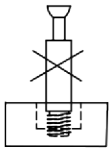
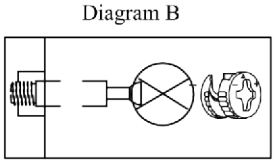

Make sure not to insert the Cam Bolt:
Too deep as shown in figure B as this will cause the Cam Lock to be misaligned and unable to interlock properly.

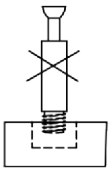
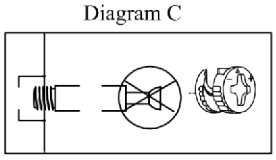

Also avoid inserting the Cam Bolt too close to the surface of the hole as shown in figure C, as this will cause the Cam Lock to be too loose, and not interlock properly.

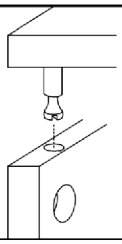

Connect the panels together.

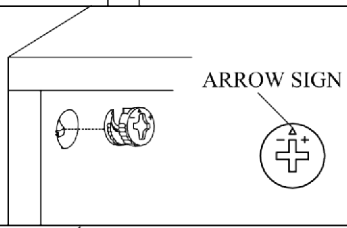

Insert the Cam Lock so the side opening fits over the head of the Cam Bolt.

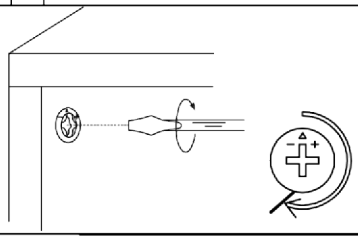

To tighten the Cam Lock, turn it clockwise on half a turn with a flat screwdriver.
**Do not use an automatic screwdriver as it may bend or break if too much power is imposed.*

Detail View

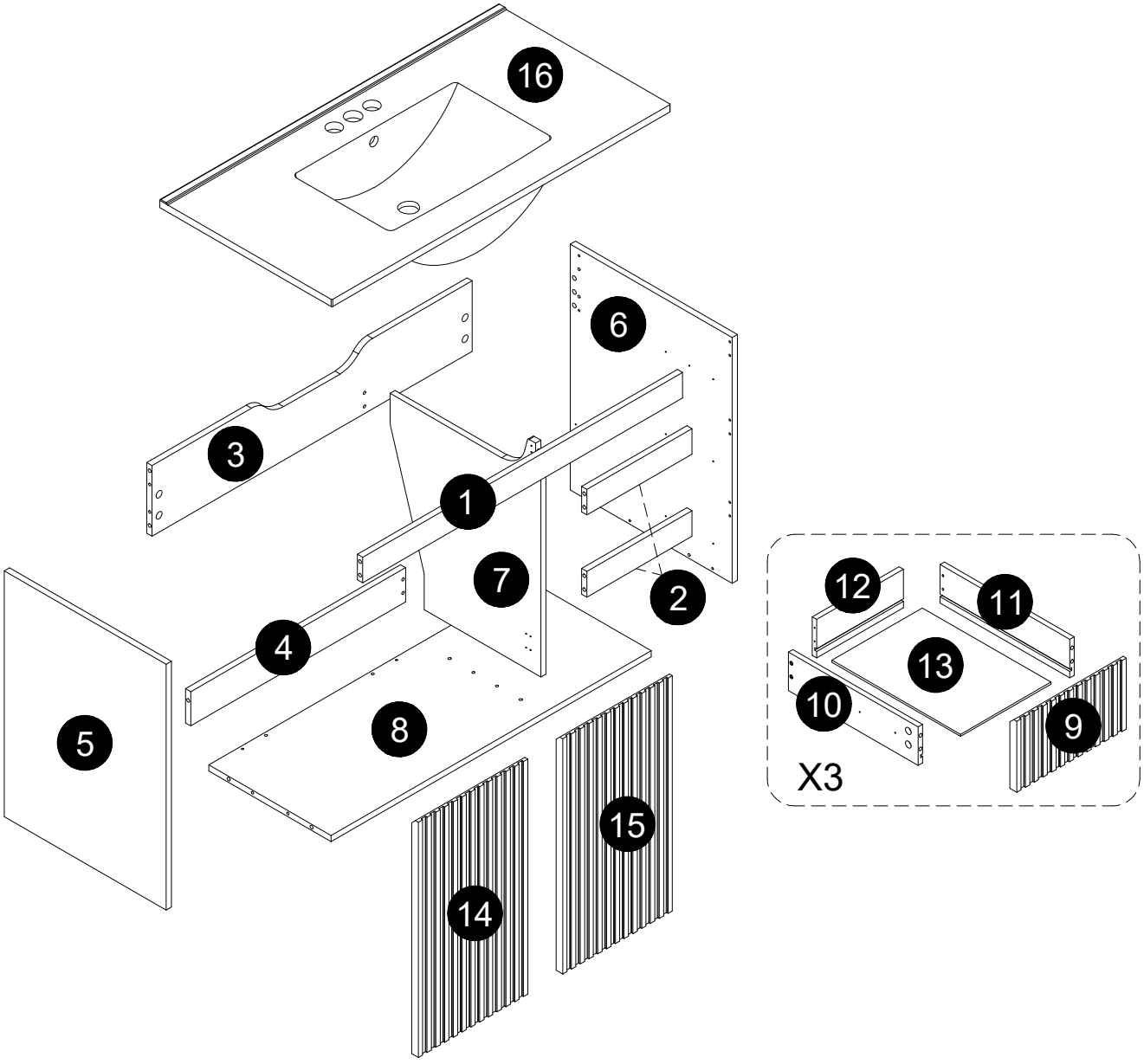

Note:Don't tighten all screws during installation.

Part Lists: N729P517638

1 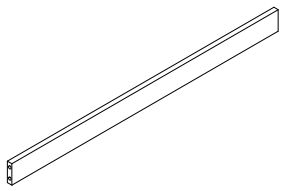 1PC	2 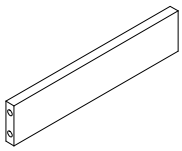 2PCS	3 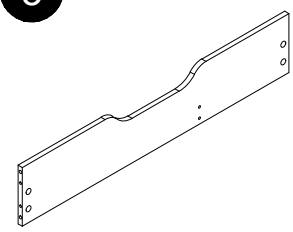 1PC	4 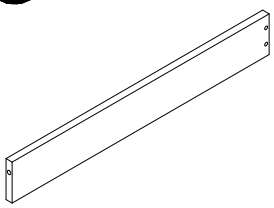 1PC
5 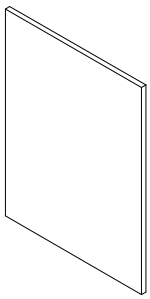 1PC	6 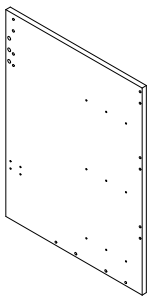 1PC	7 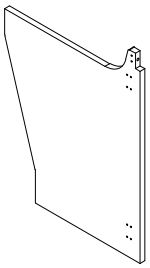 1PC	8 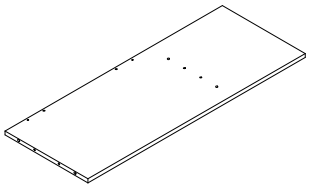 1PC
9 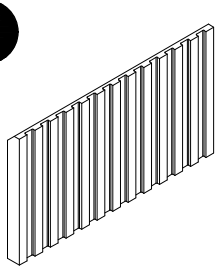 3PCS	10 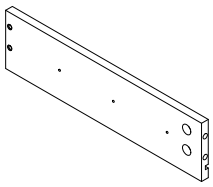 3PCS	11 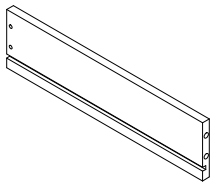 3PCS	12 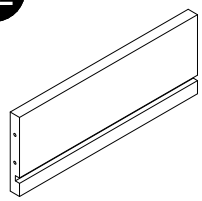 3PCS
13 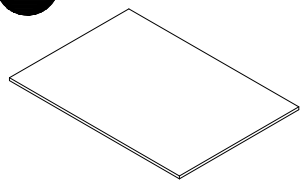 3PCS	14 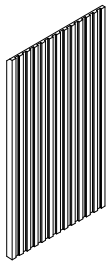 1PC	15 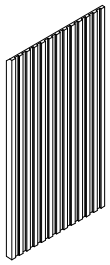 1PC	16 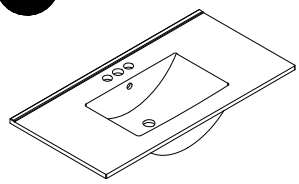 1PC

Hardware Lists: N729P517638

A	X35+1
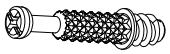	
Ø6x34mm	

B	X35+1
	
Ø15x9.5mm	

C	X13+1
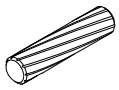	
Ø6x30mm	

D	X4
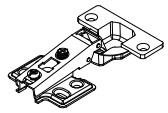	
Ø35mm	

E	X24+1
	
Ø8x15mm	

F	X6
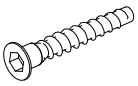	
Ø6x40mm	

G	X1
	

H	X2
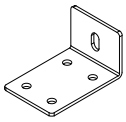	

I	X1SET
Rx1pc Lx1pc 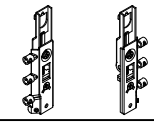 I.1 x 2pcs  I.2 x 4pcs	

J	X34+1
	
Ø4x12mm	

K	X18
	
Ø4x10mm	

L	X12
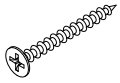	
Ø8x35mm	

M	X8
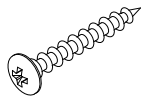	
Ø5x40mm	

N	X8
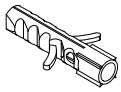	
Ø8*40mm	

O	X1
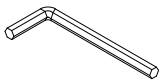 4mm	

P	X1
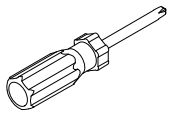	

Q	X 3SET
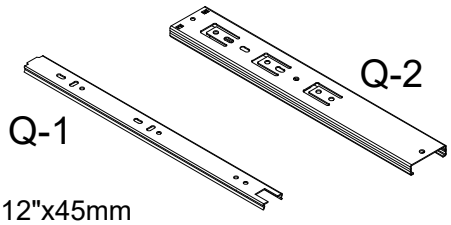 Q-2 Q-1 12"x45mm	
Accessories	

Step 1

INSTALLATION STEPS

Press the plastic part in the indicated direction to separate drawer runner Q-1 and Q-2 before assembling.

REMARK:
Please grip the Q-1 part while sliding the Q-2 part

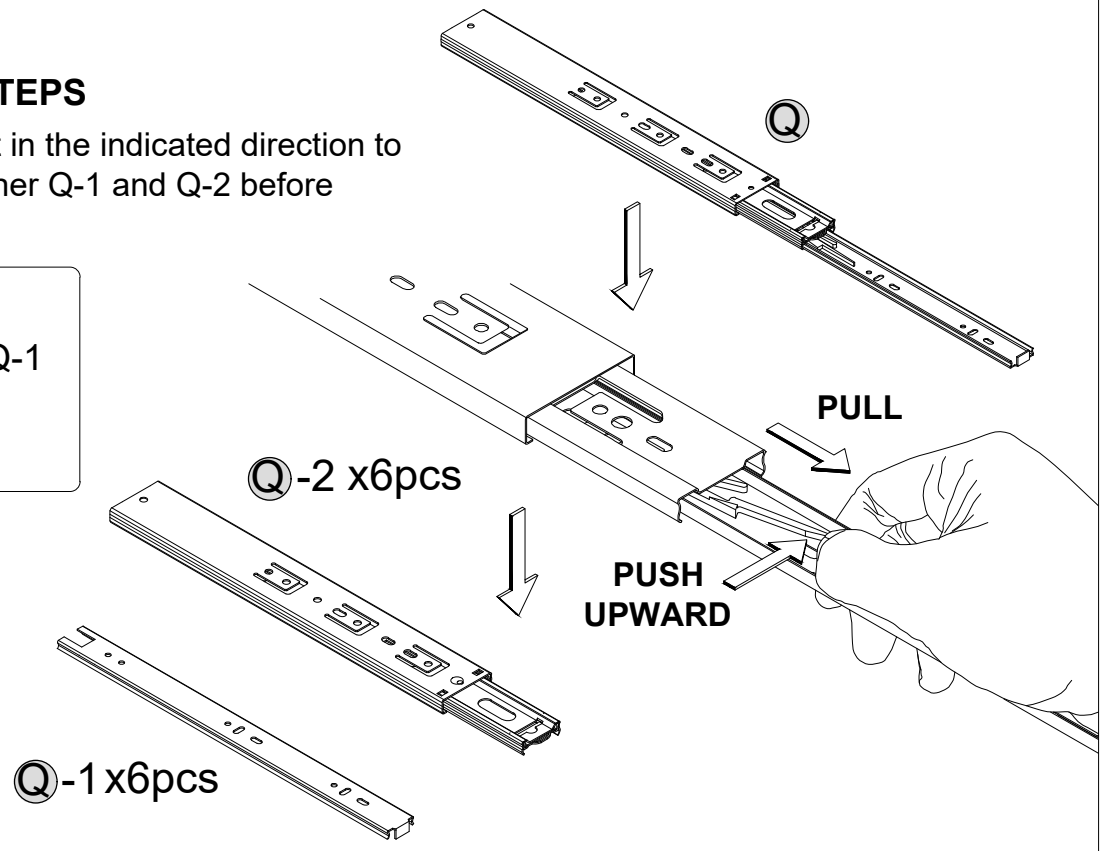

Step 2

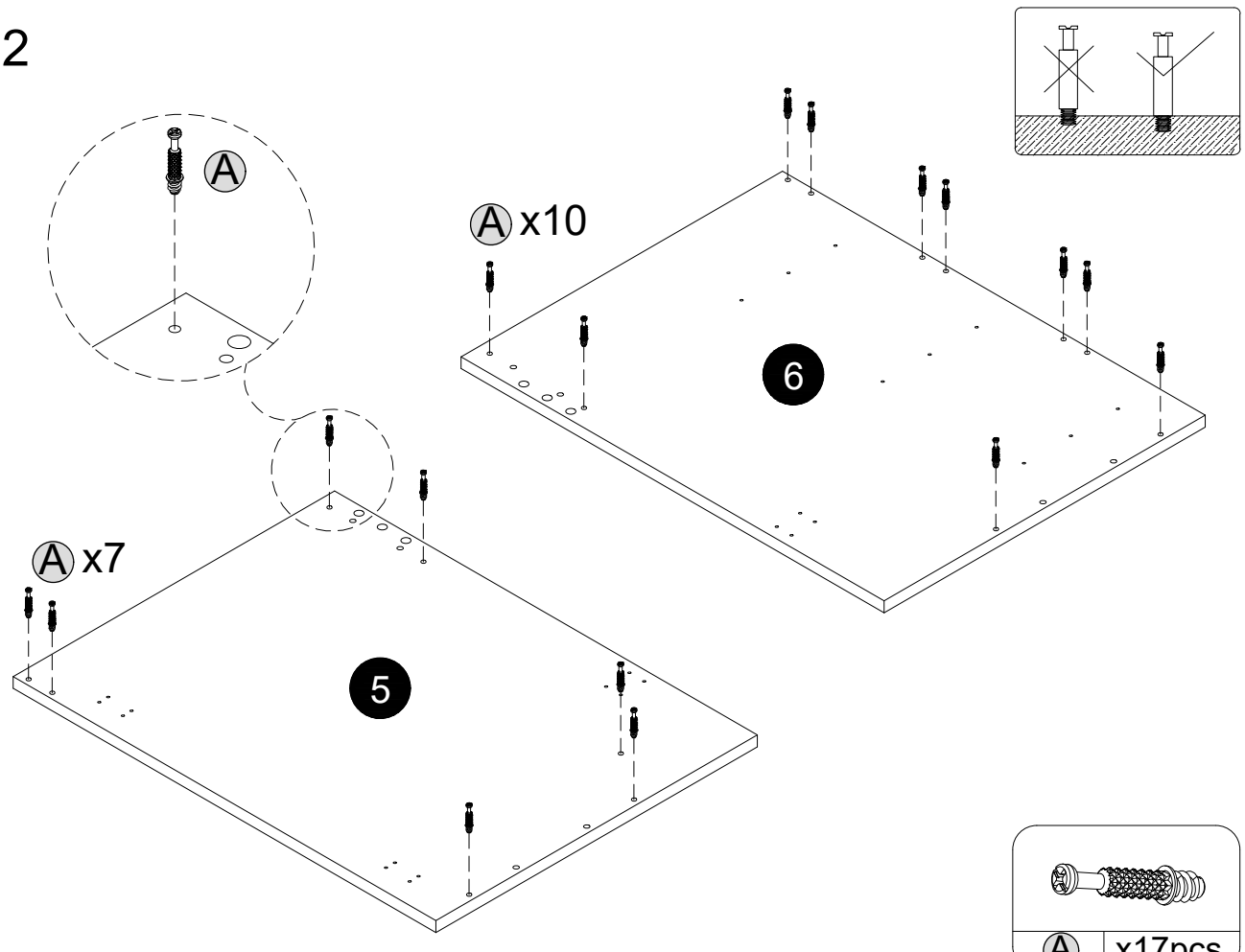

Step 3

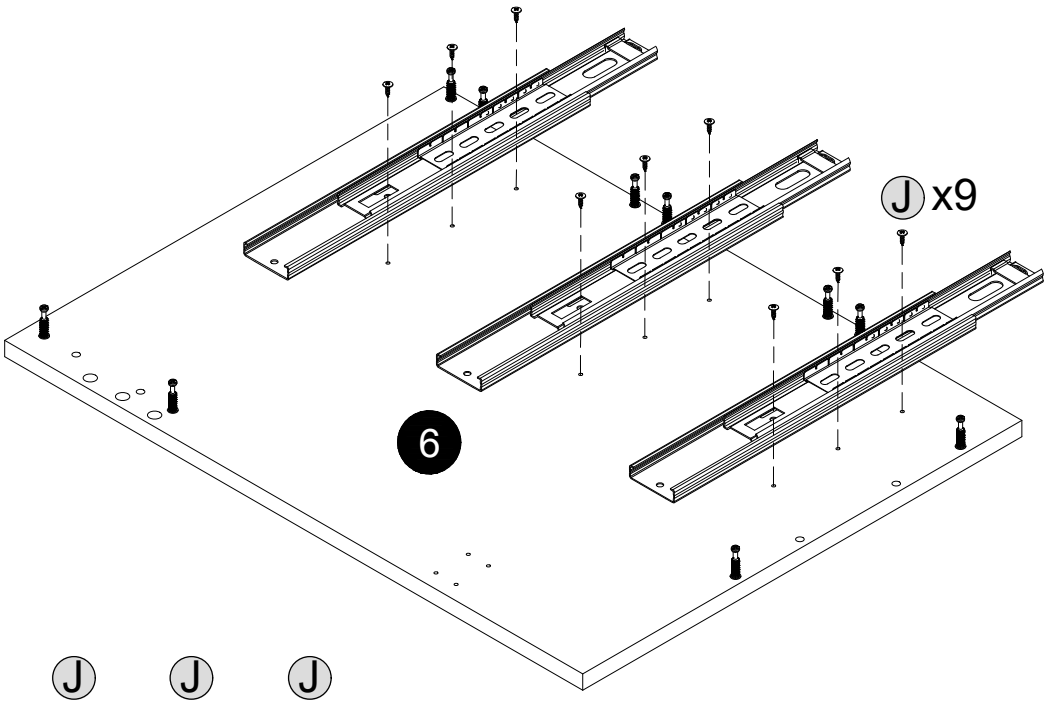

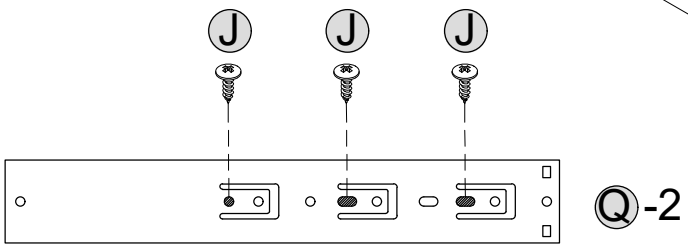

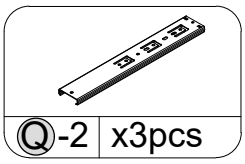

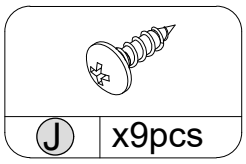

Step 4

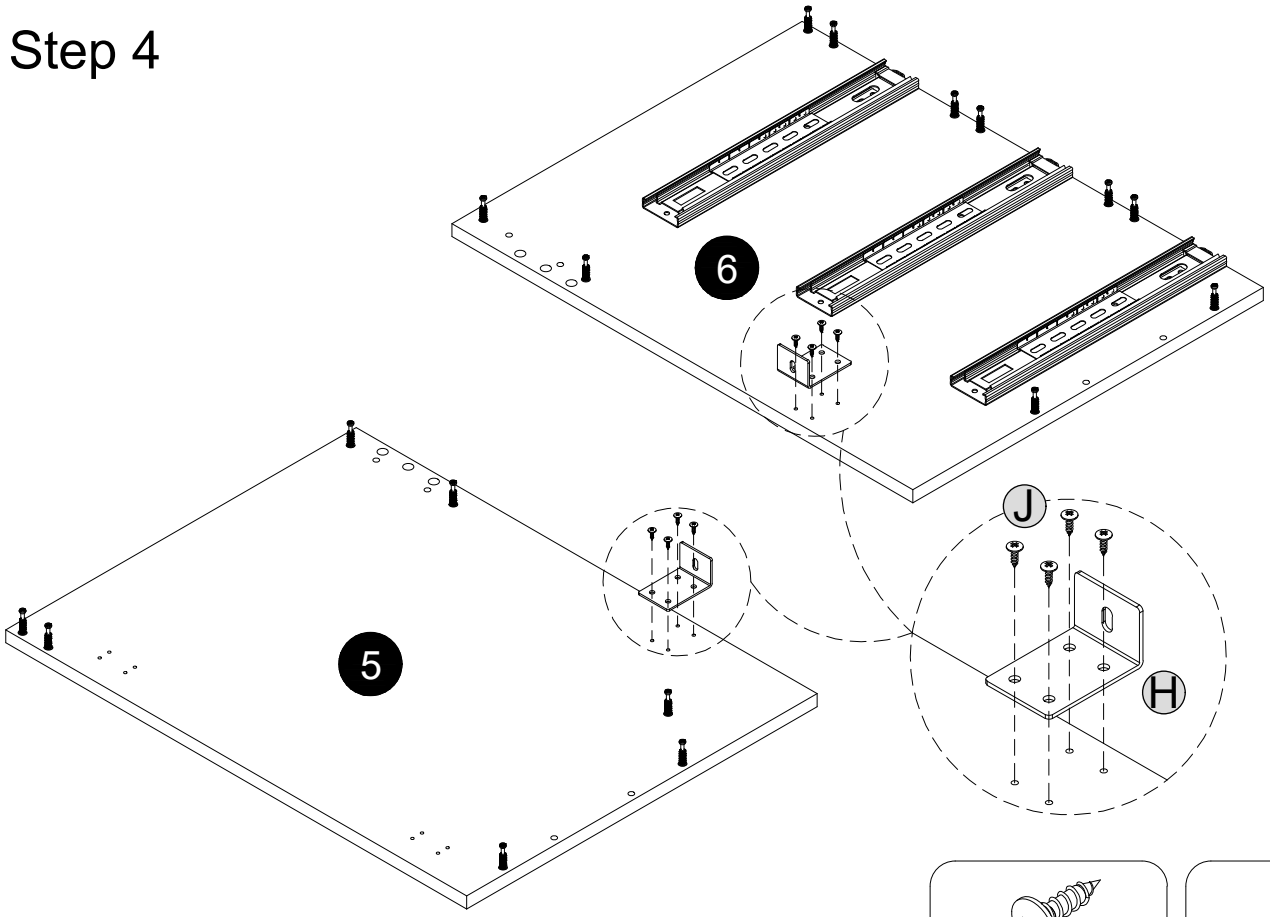

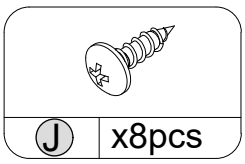

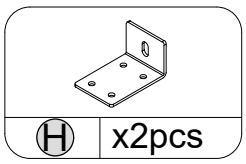

Step 5

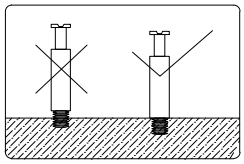

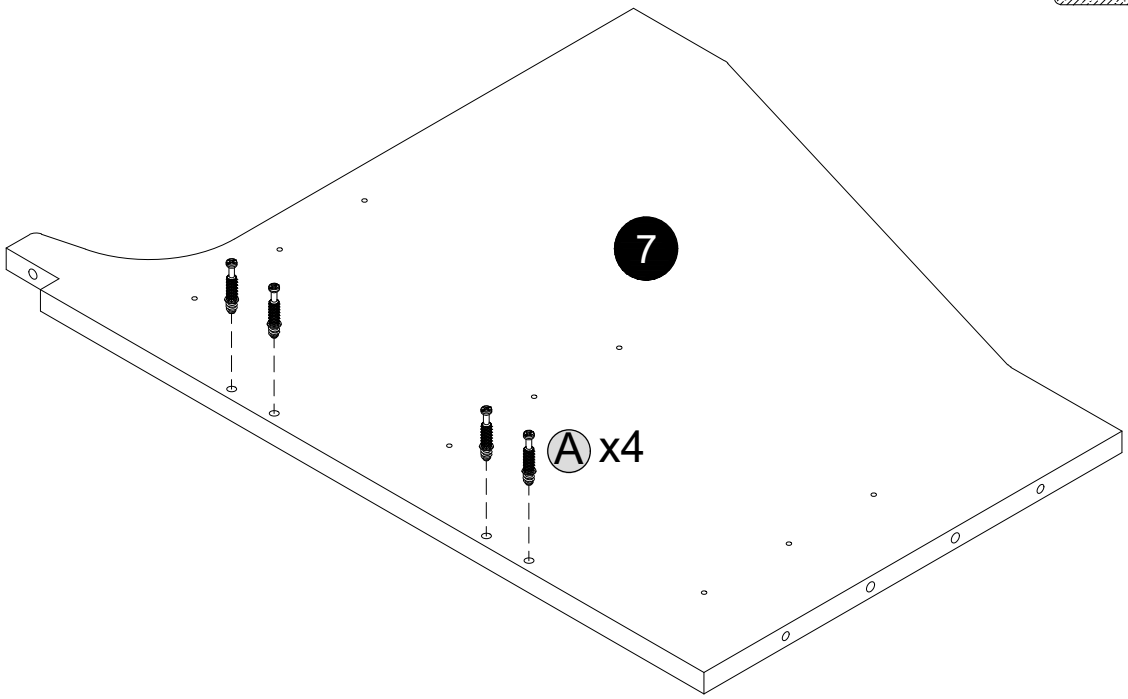

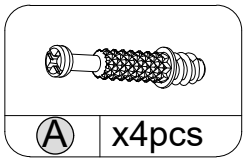

Step 6

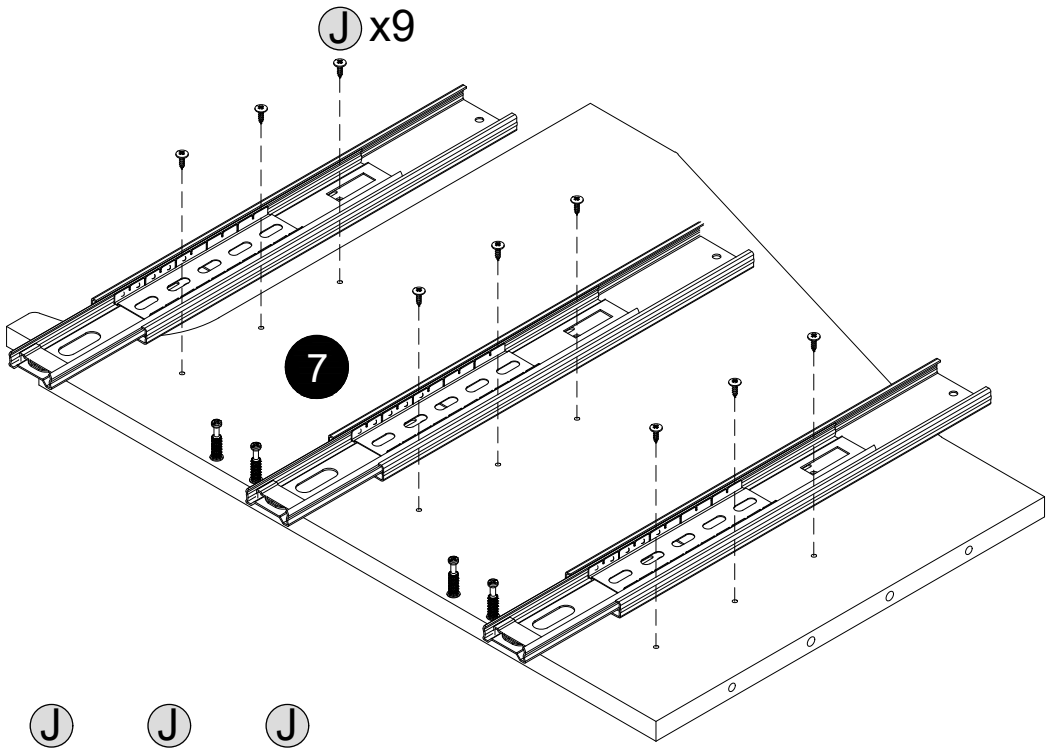

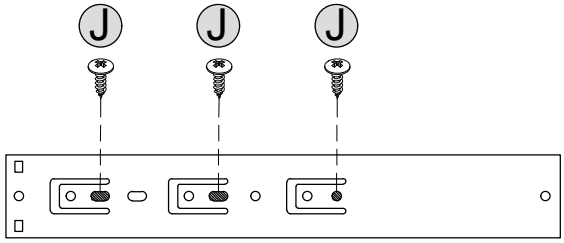

Ⓠ-2

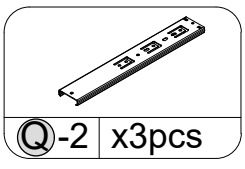

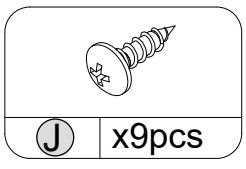

Step 7

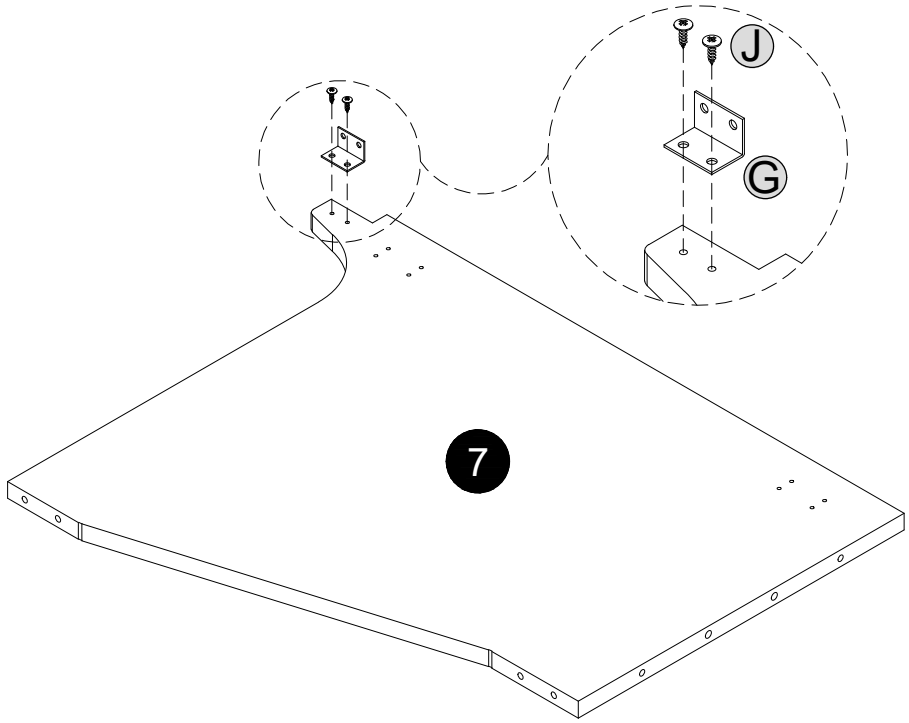

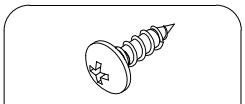

J x2pcs

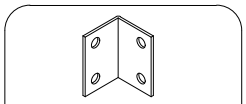

G x1pc

Step 8

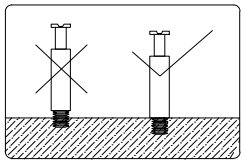

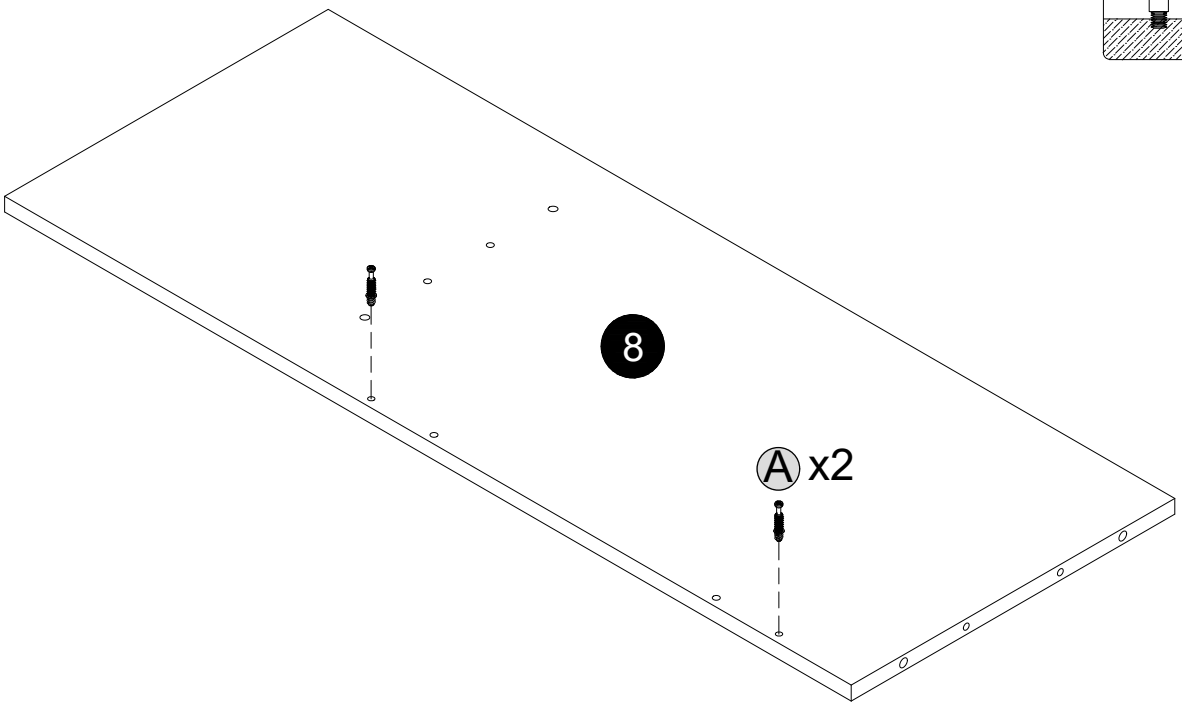

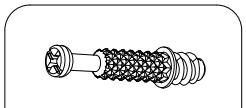

A x2pcs

Step 9

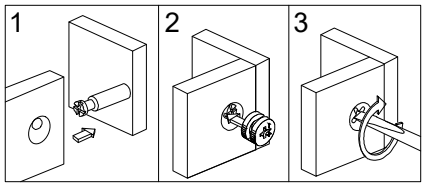

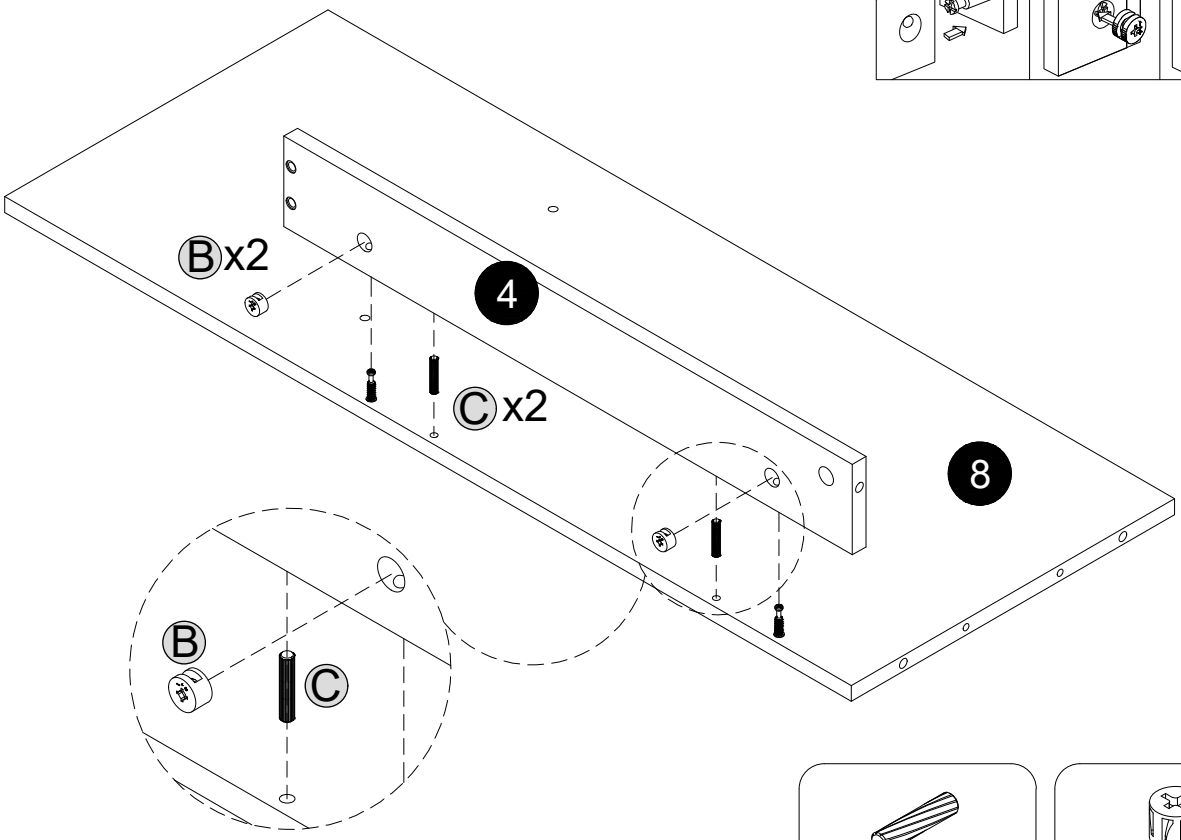

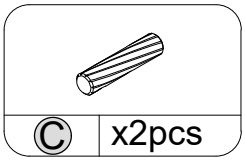

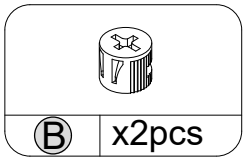

Step 10

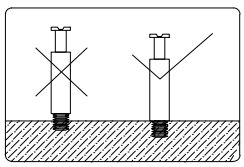

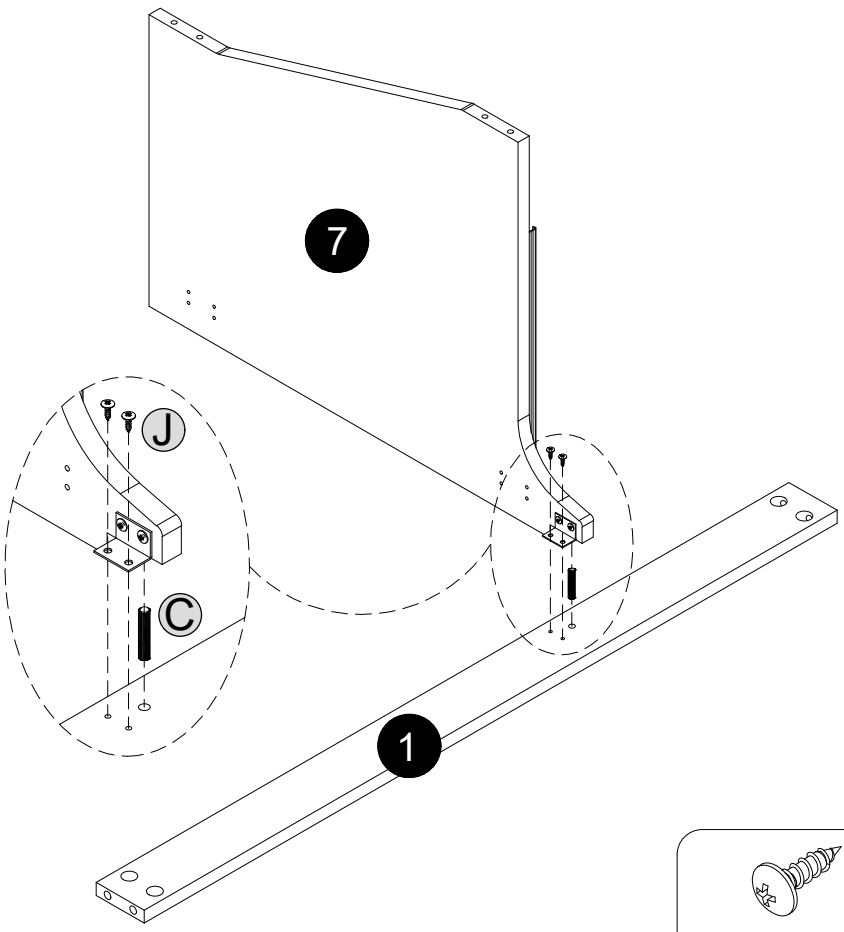

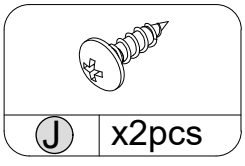

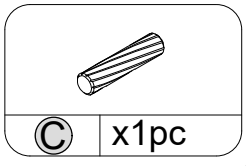

Step 11

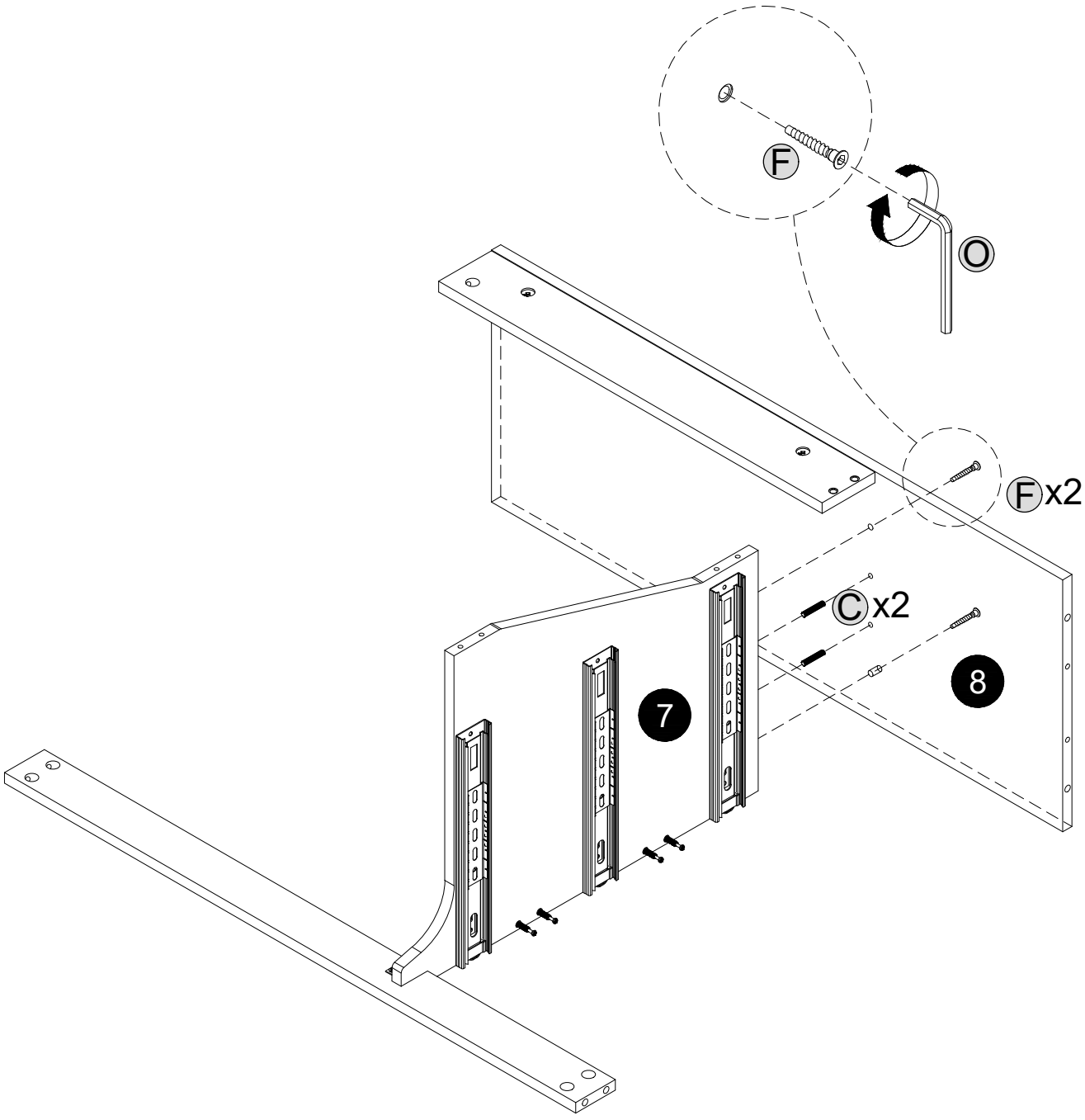

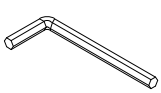	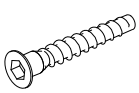	
O x1pc	F x2pcs	C x2pcs

Step 12

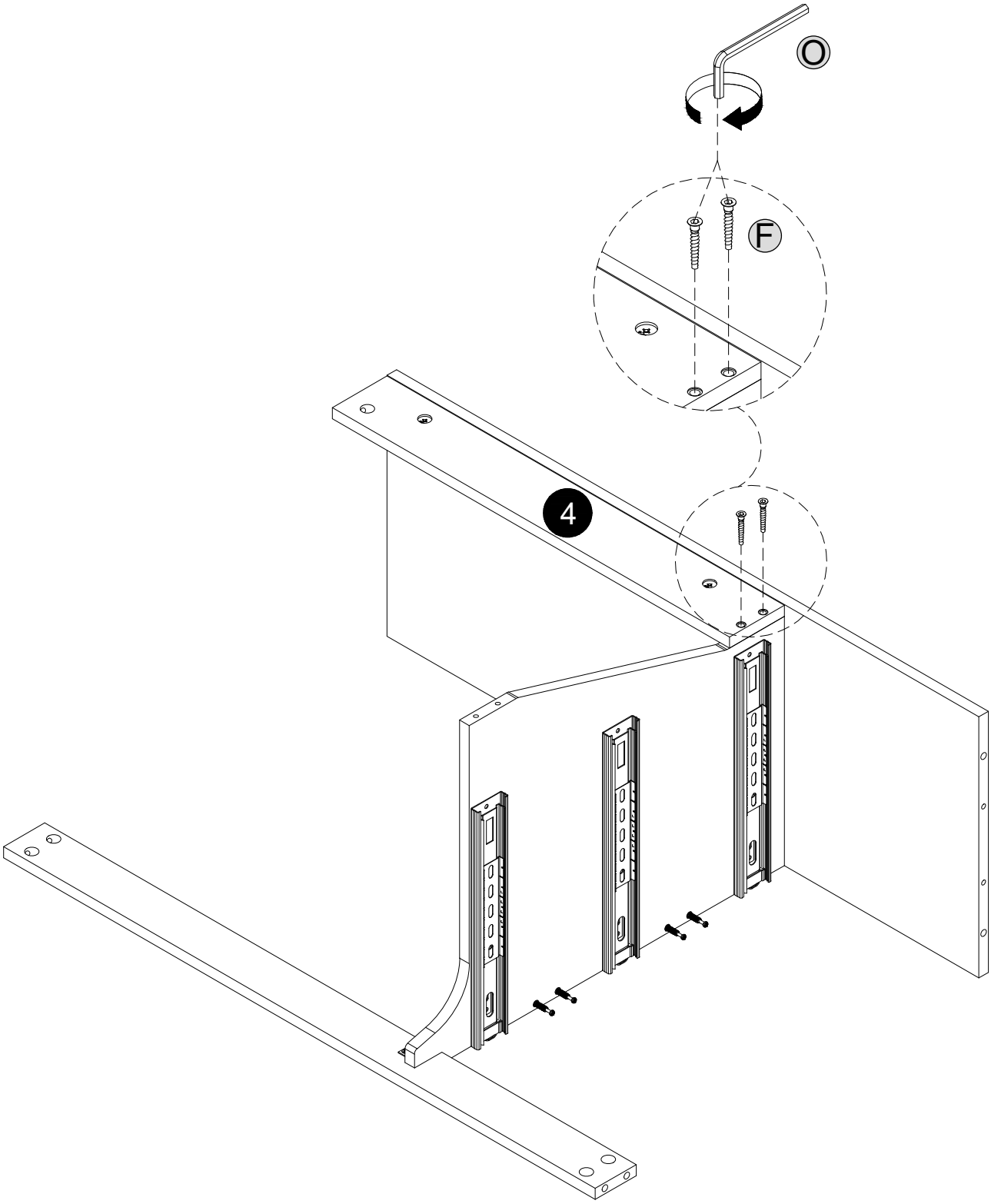

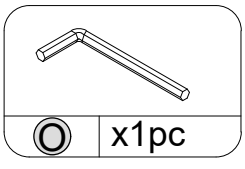

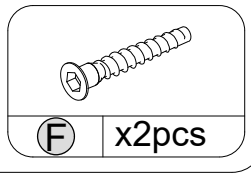

Step 13

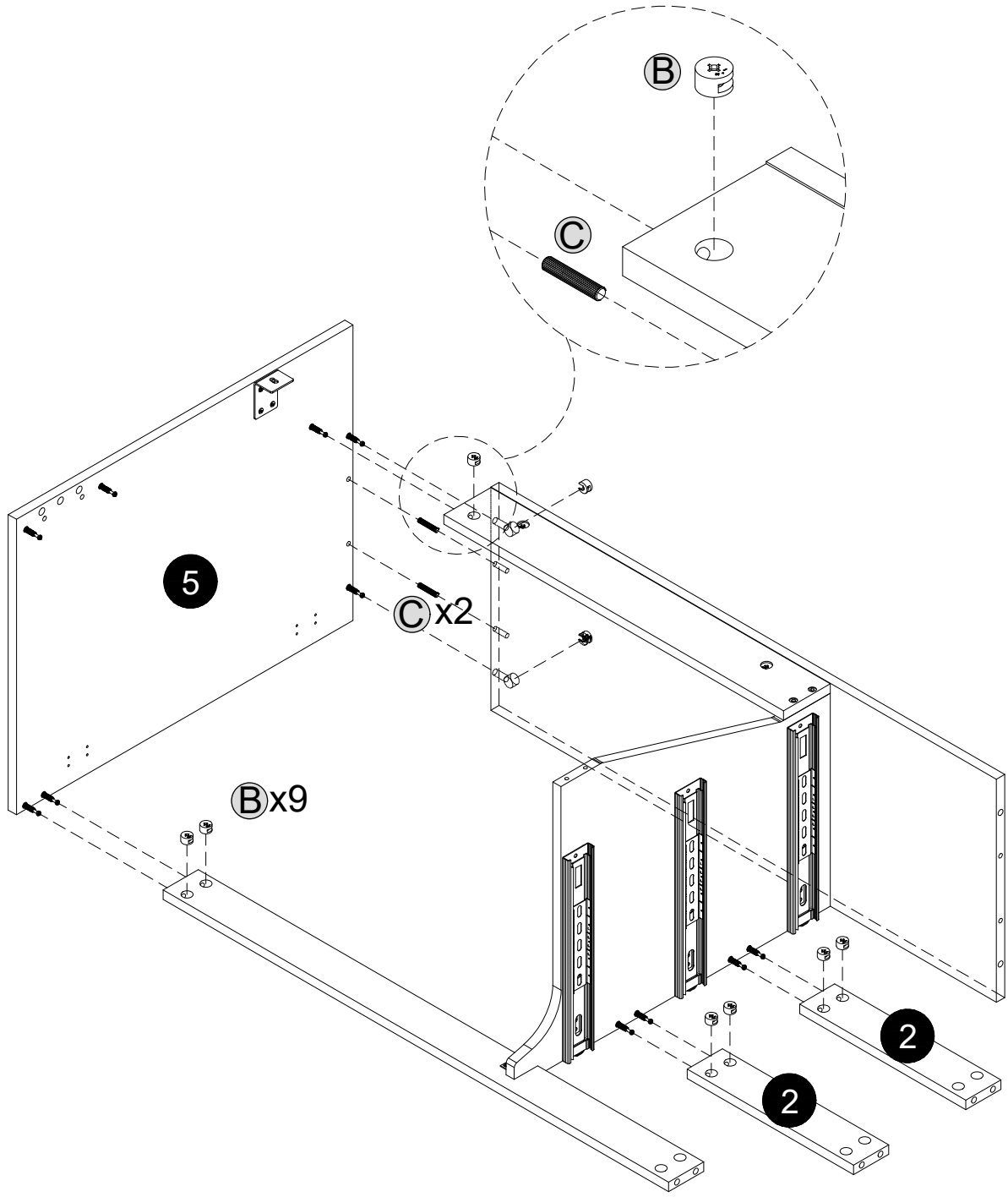

 C	x2pcs
 B	x9pcs

Step 14

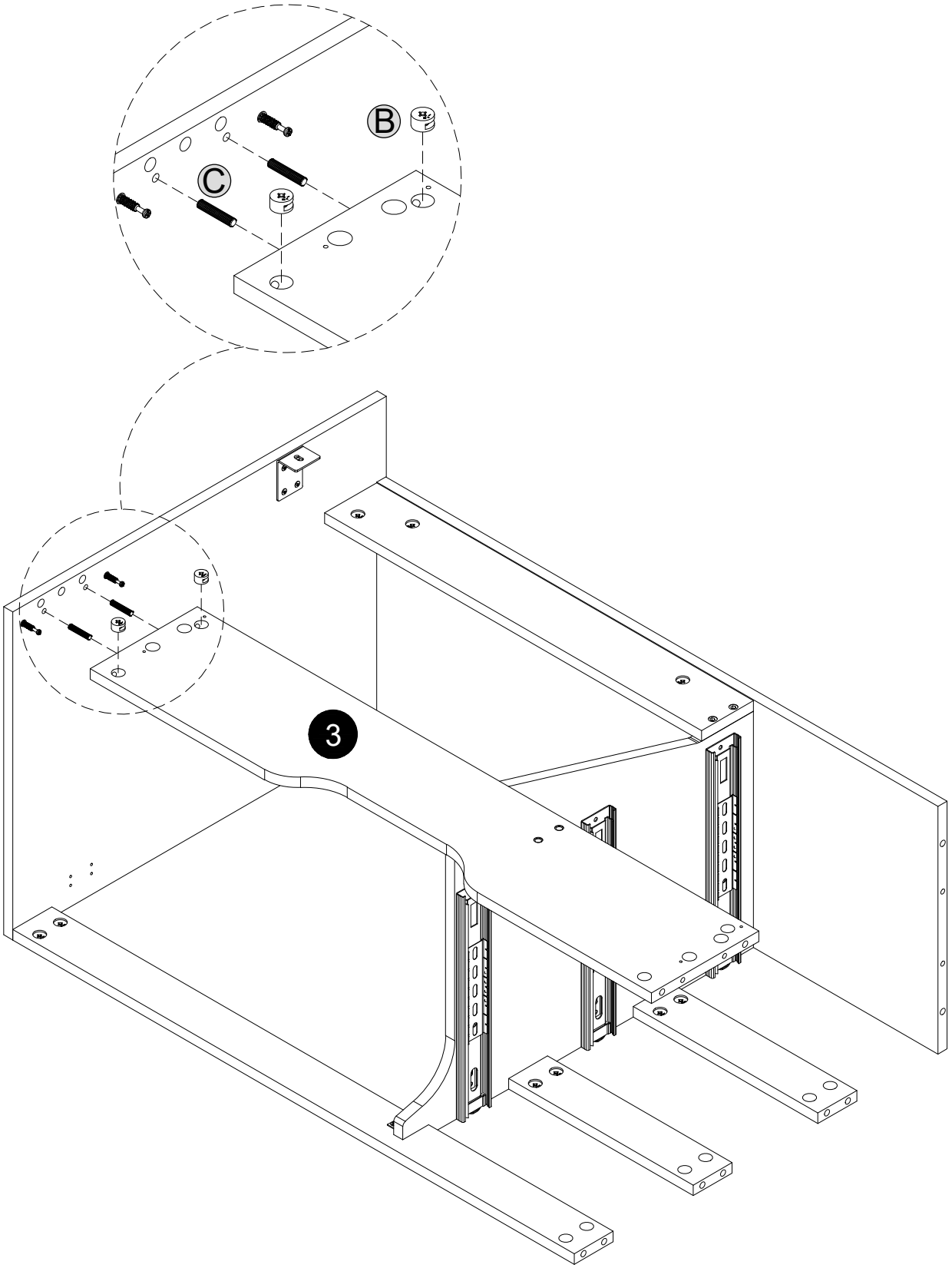

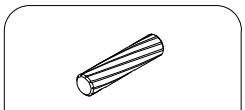

C x2pcs

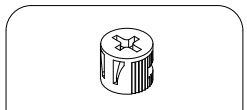

B x2pcs

Step 15

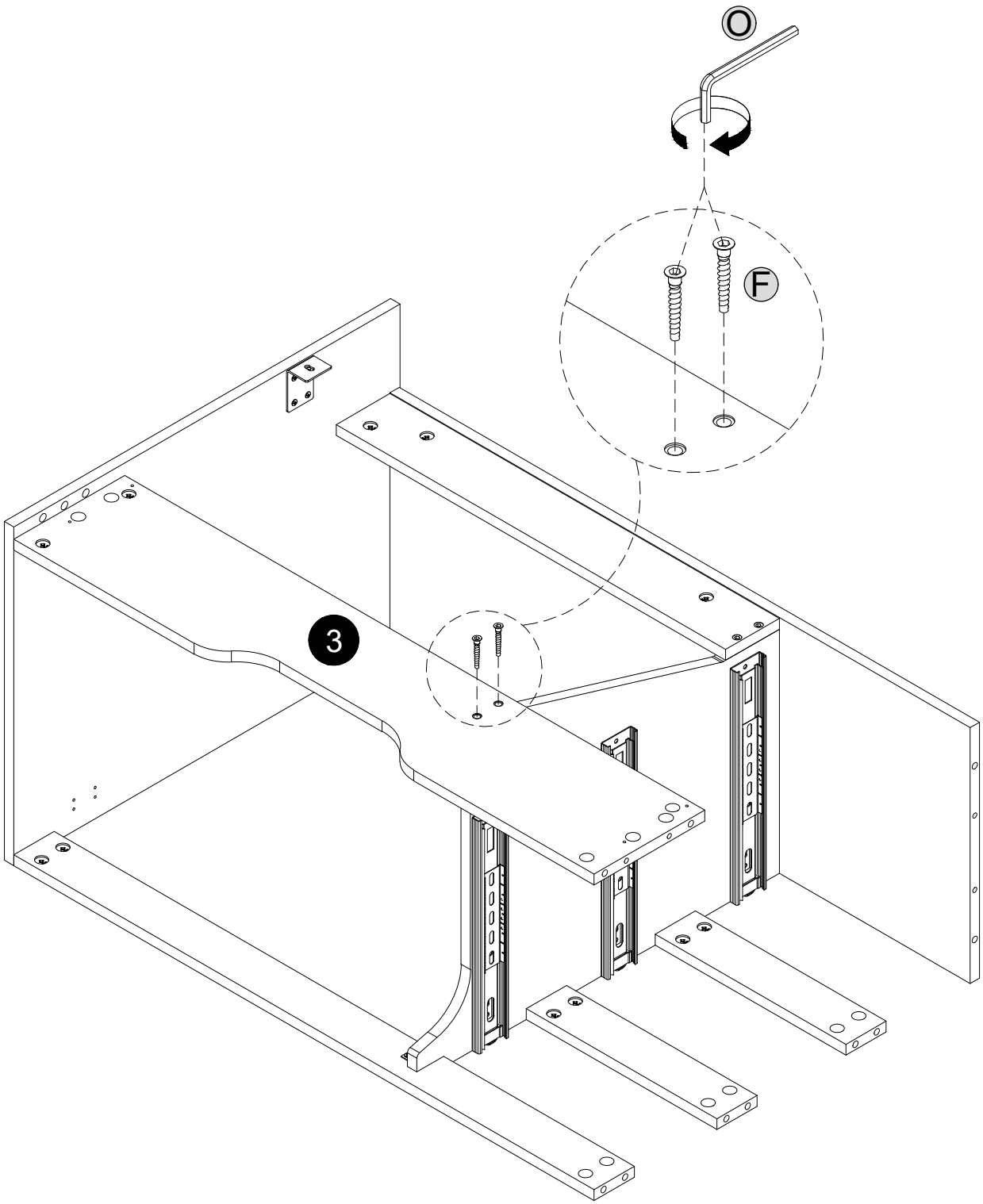

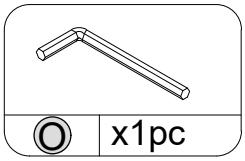

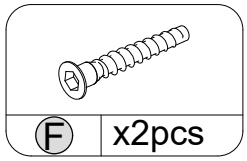

Step 16

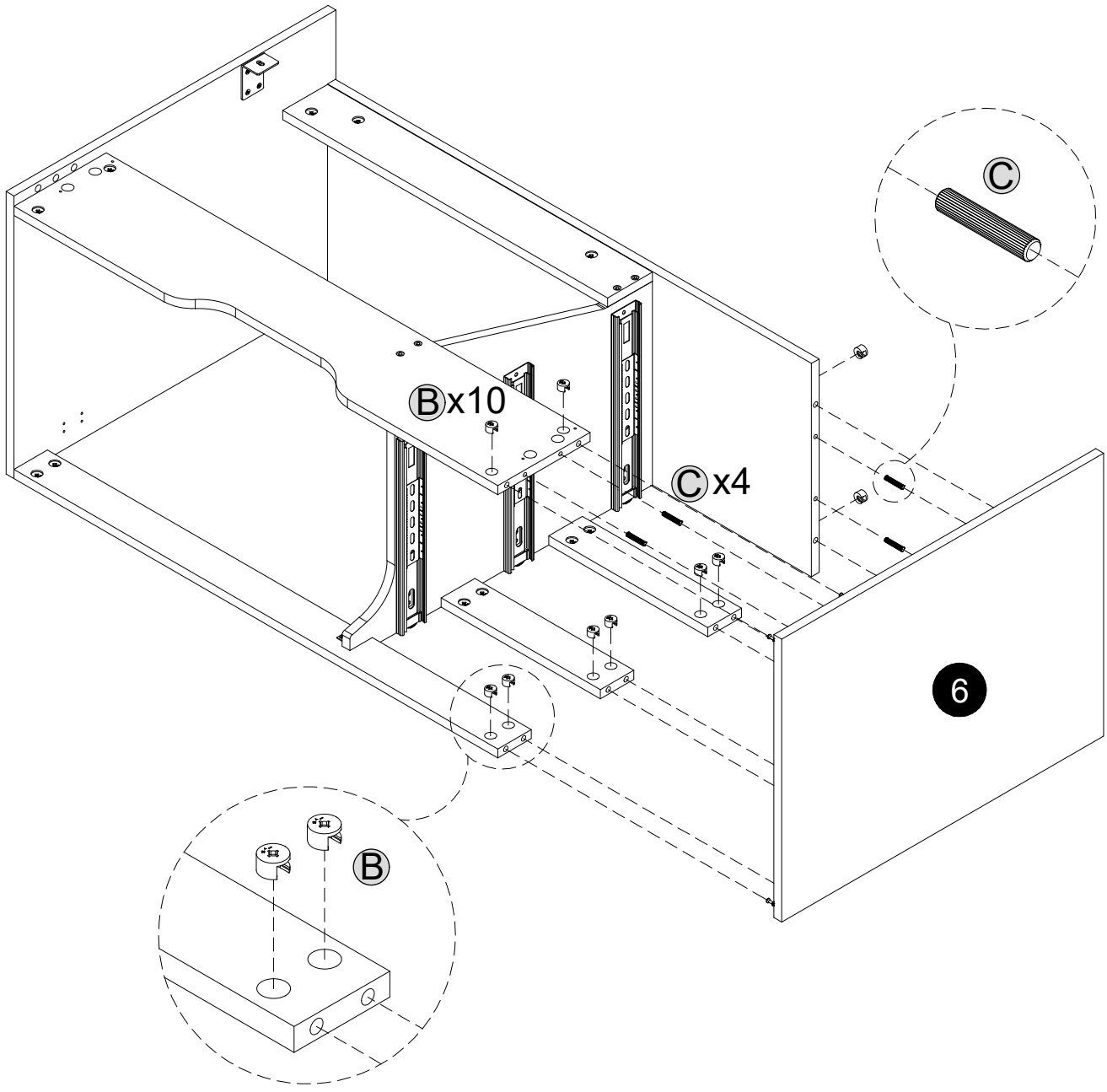

C	x4pcs
B	x10pcs

Step 17

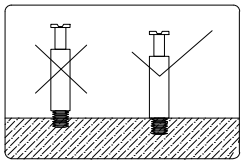

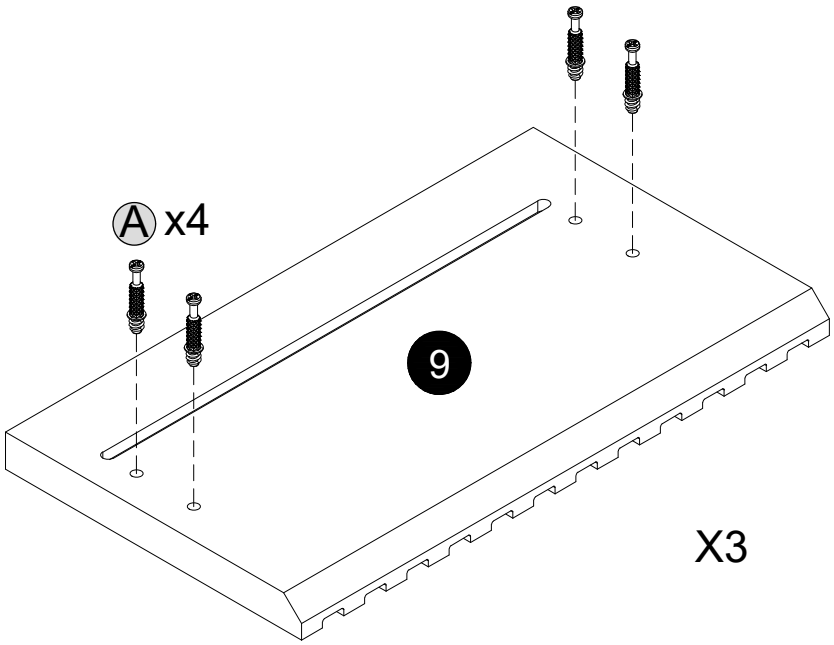

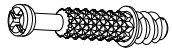

A x12pcs

Step 18

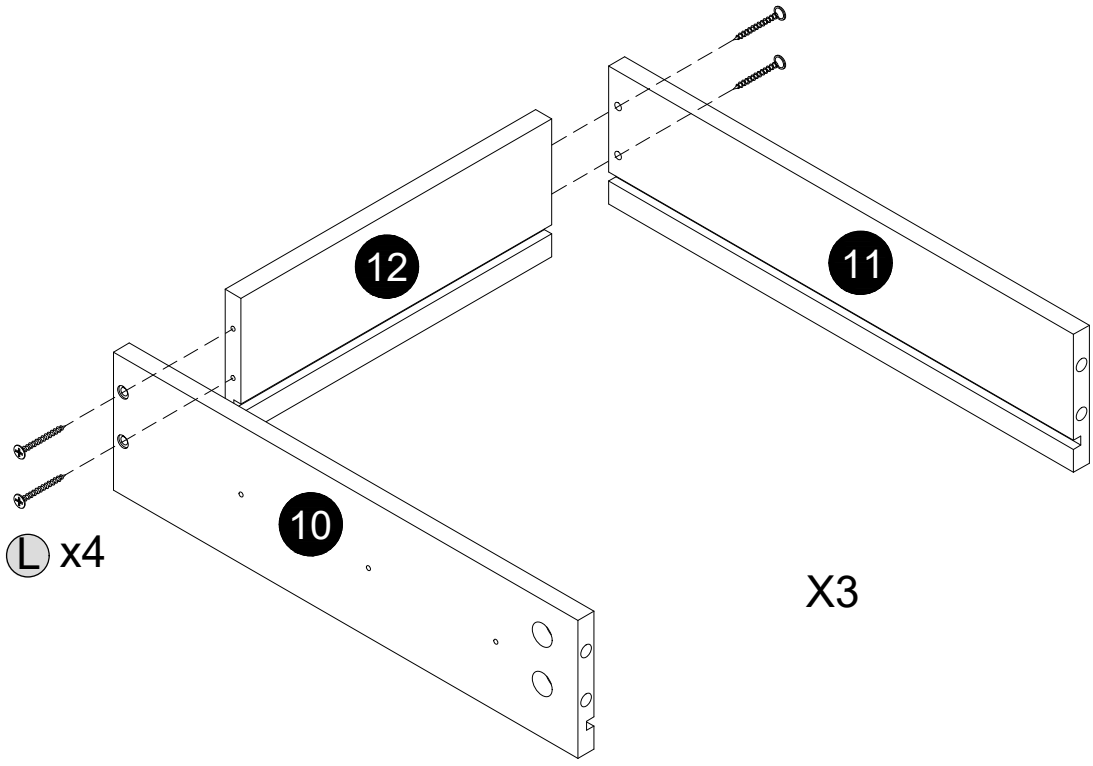

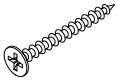

L x12pcs

Step 19

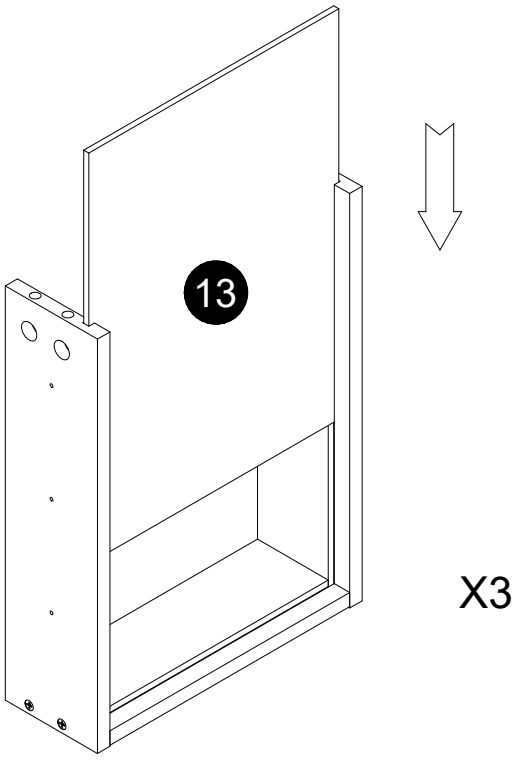

X3

Step 20

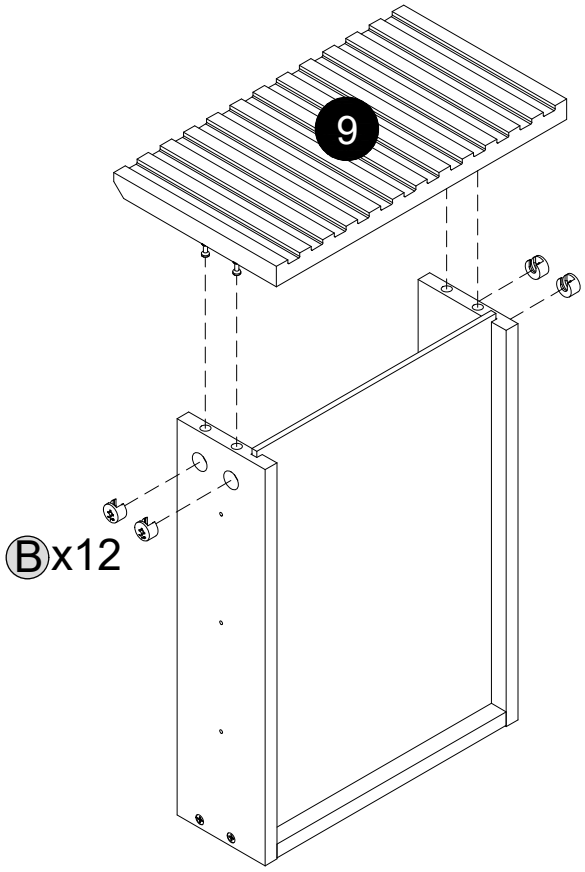

X3



B	x12pcs

Step 21

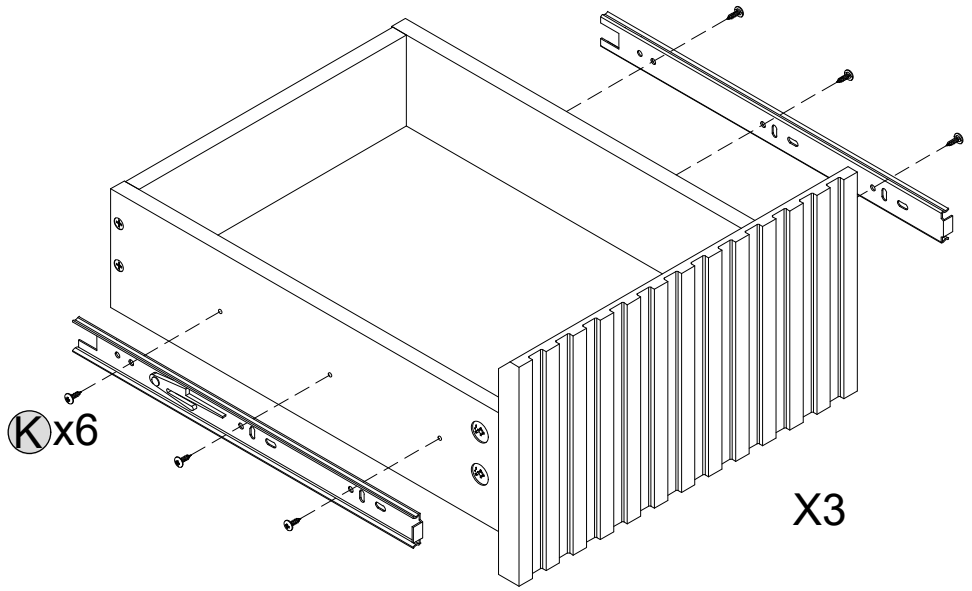

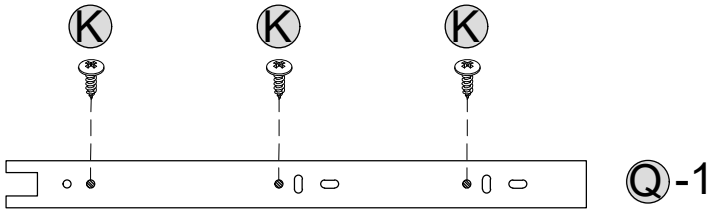

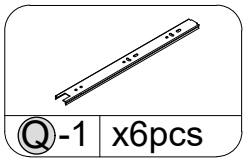

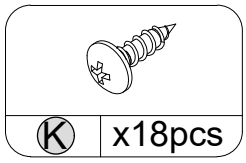

Step 22

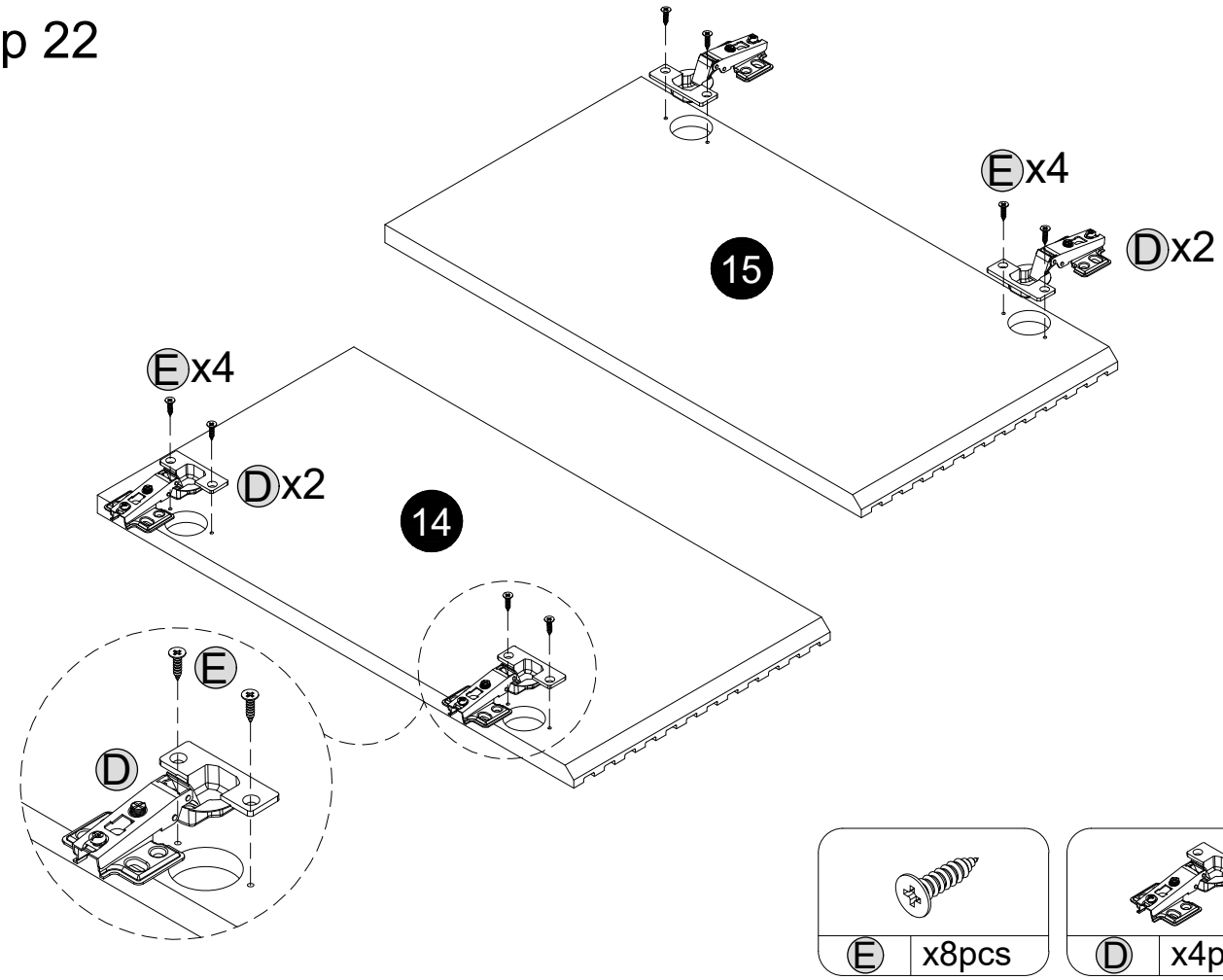

Step 23

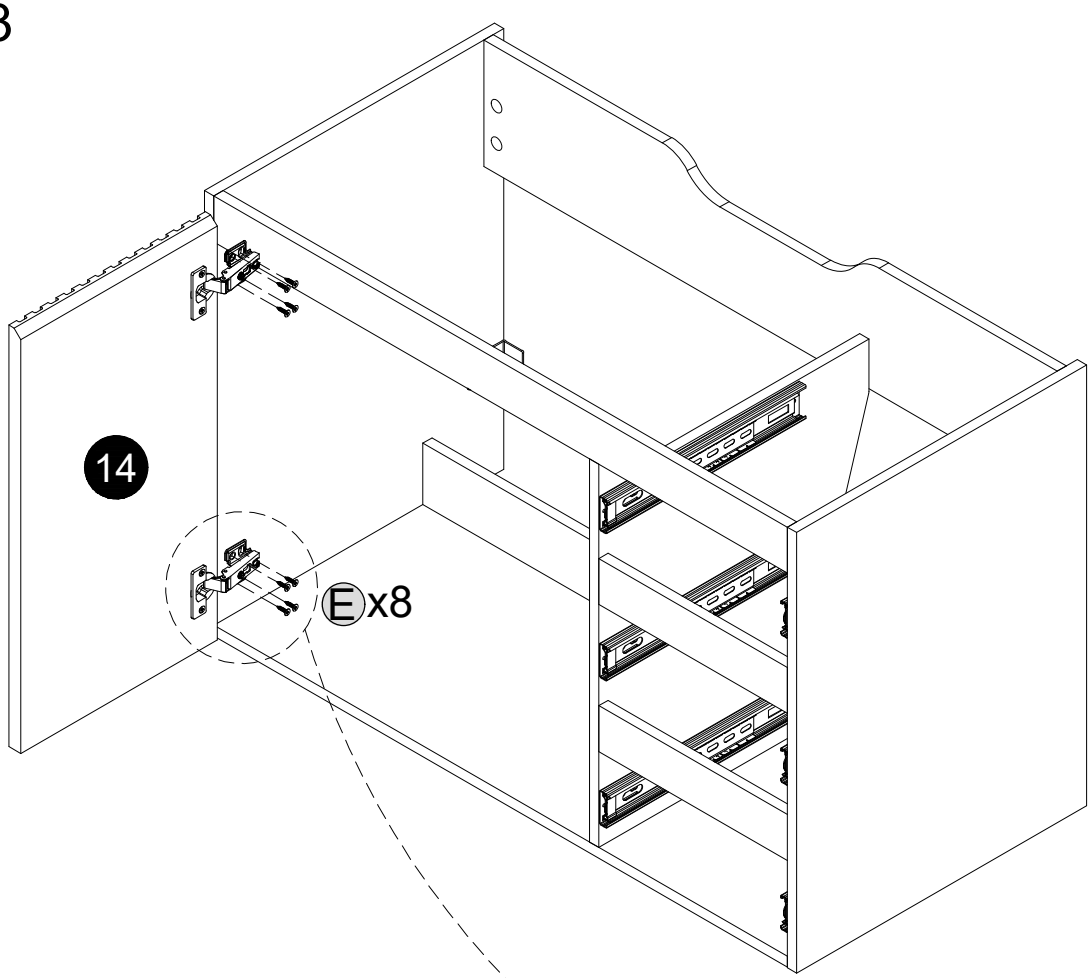

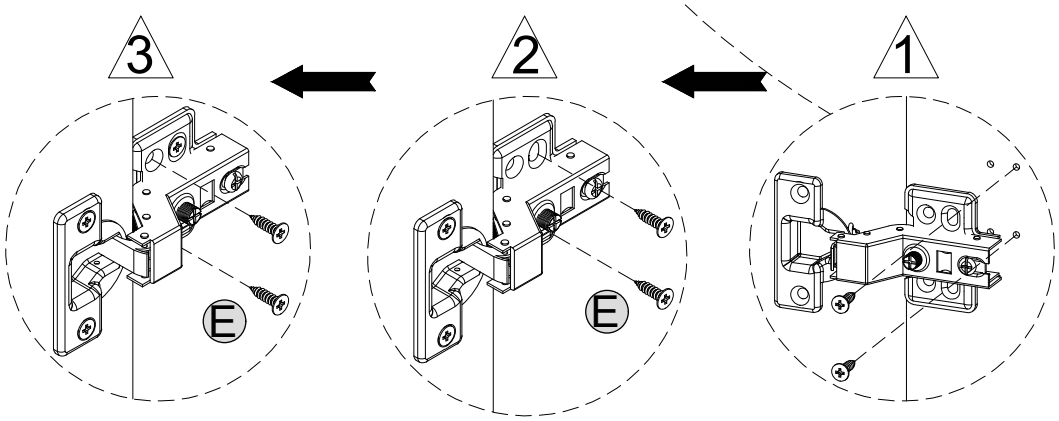

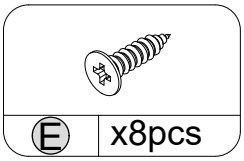

When the hinges are installed, you can refer to the pictures to adjust crevice of the doors till it's perfect

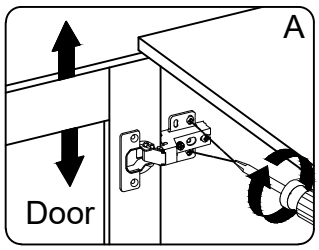

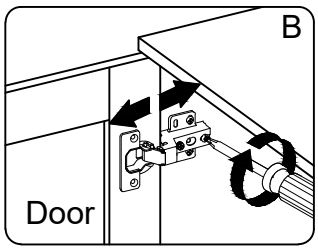

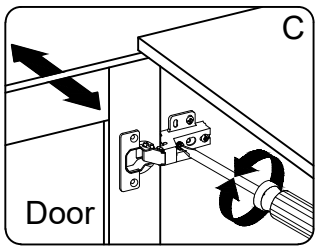

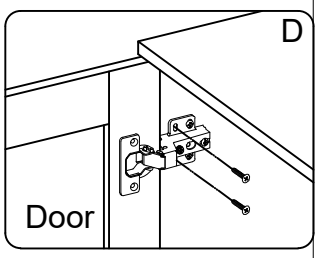

1. To adjust the doors up and down, please refer to step (A)
2. To adjust the distance between the doors and side panels, please refer to (B)
3. To adjust the gap between two doors, please refer to step (C)
4. After the adjustment finished, please tight the screws, refer to step (D)

Step 24

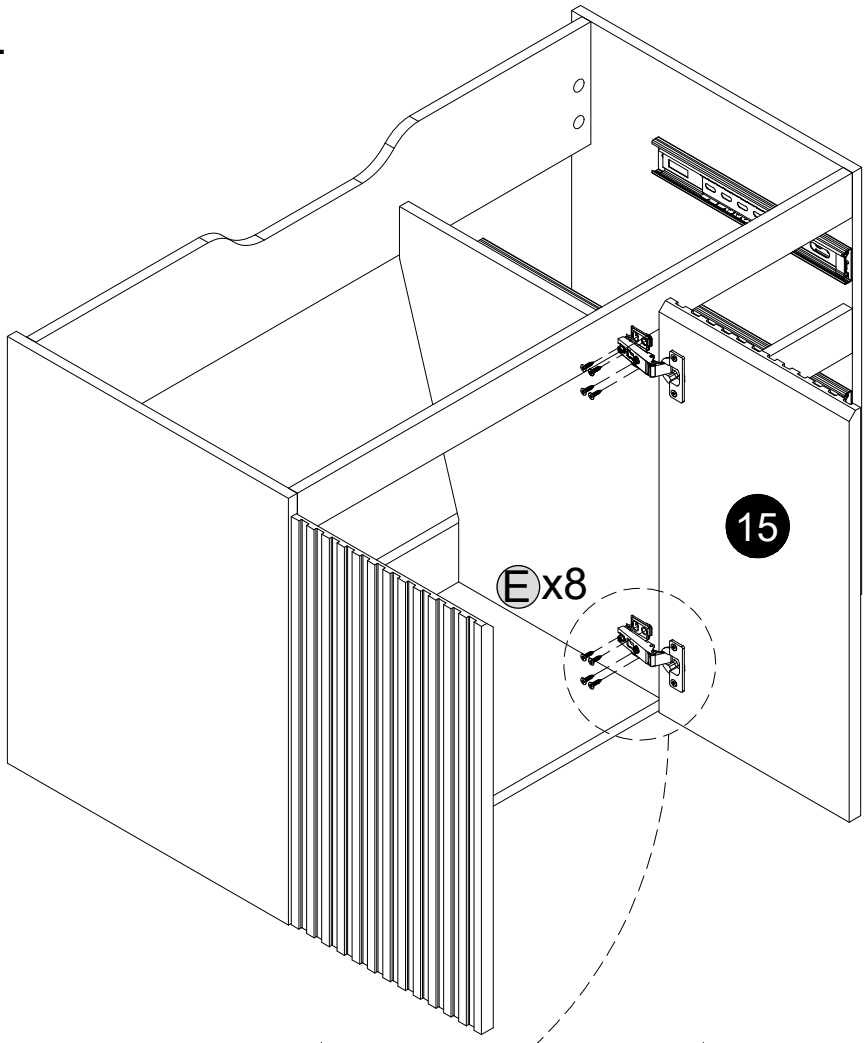

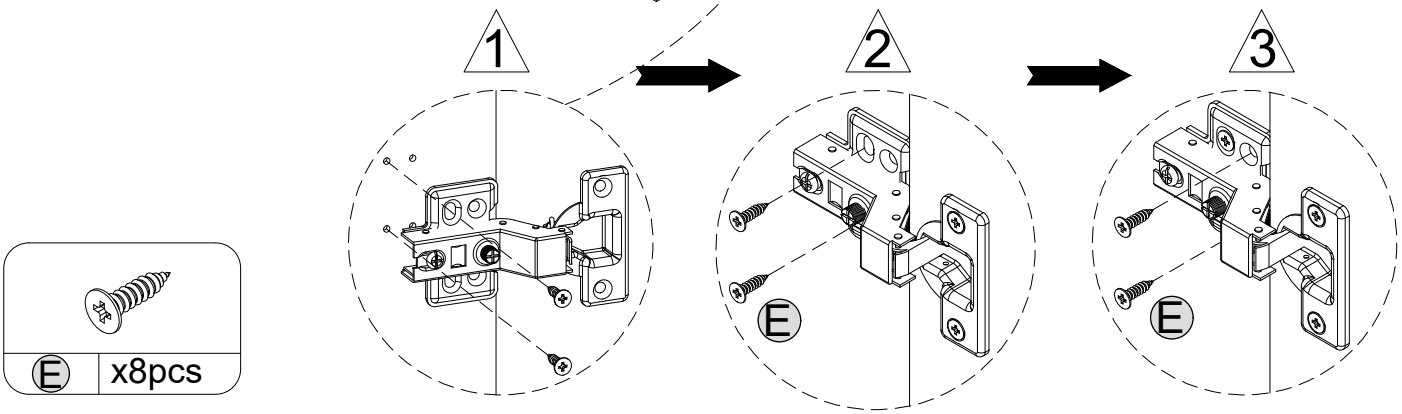

When the hinges are installed, you can refer to the pictures to adjust crevice of the doors till it's perfect

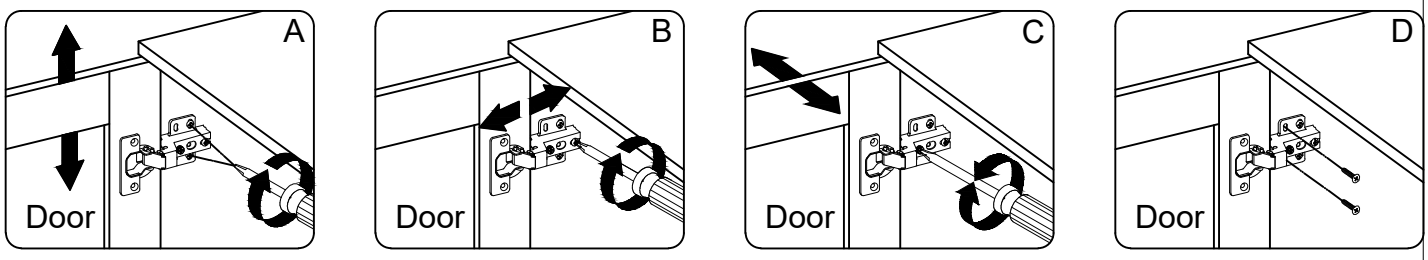

1. To adjust the doors up and down, please refer to step (A)
2. To adjust the distance between the doors and side panels, please refer to (B)
3. To adjust the gap between two doors, please refer to step (C)
4. After the adjustment finished, please tight the screws, refer to step (D)

Step 25

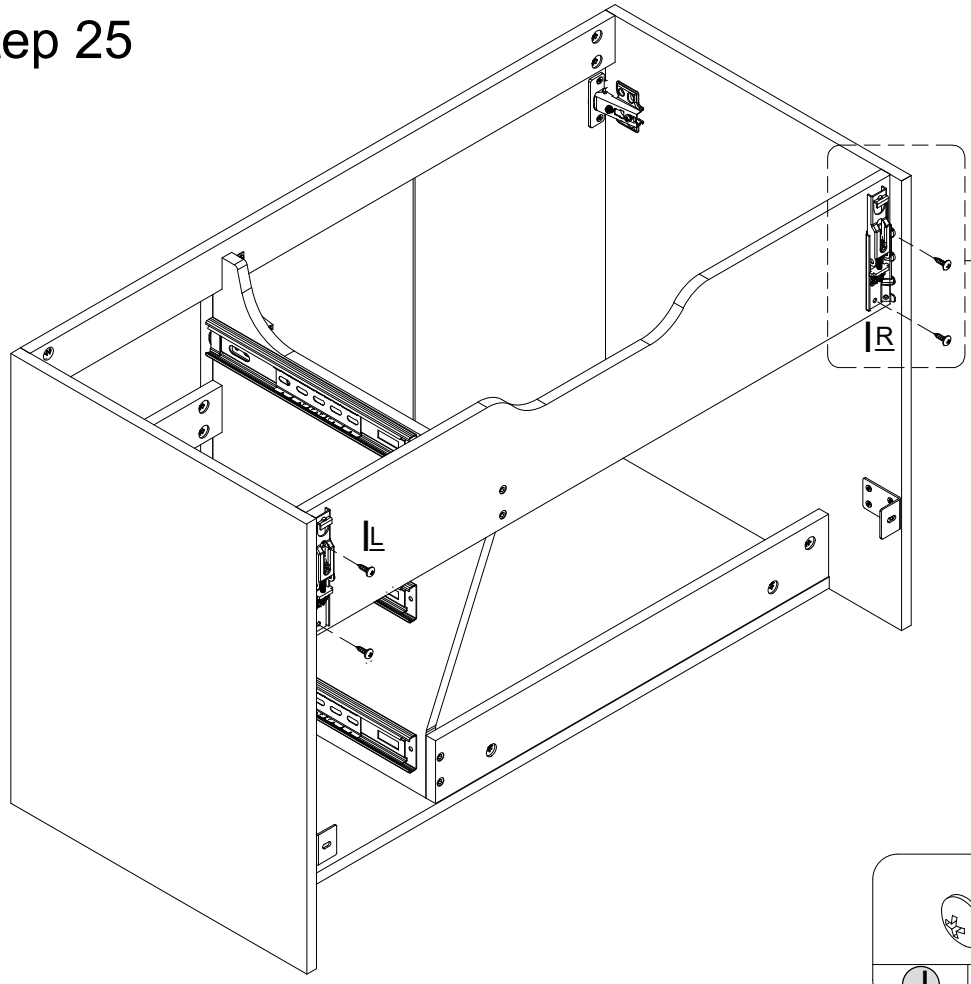

1

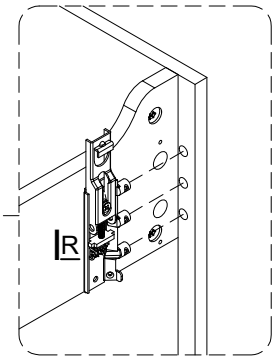

2

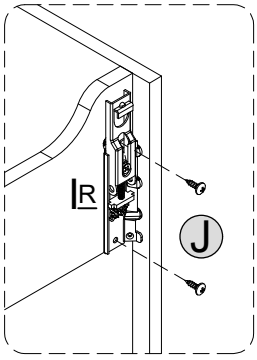

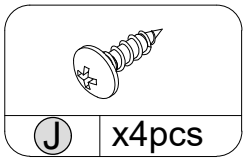

J x4pcs

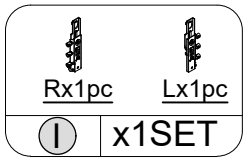

I x1SET

Step 26

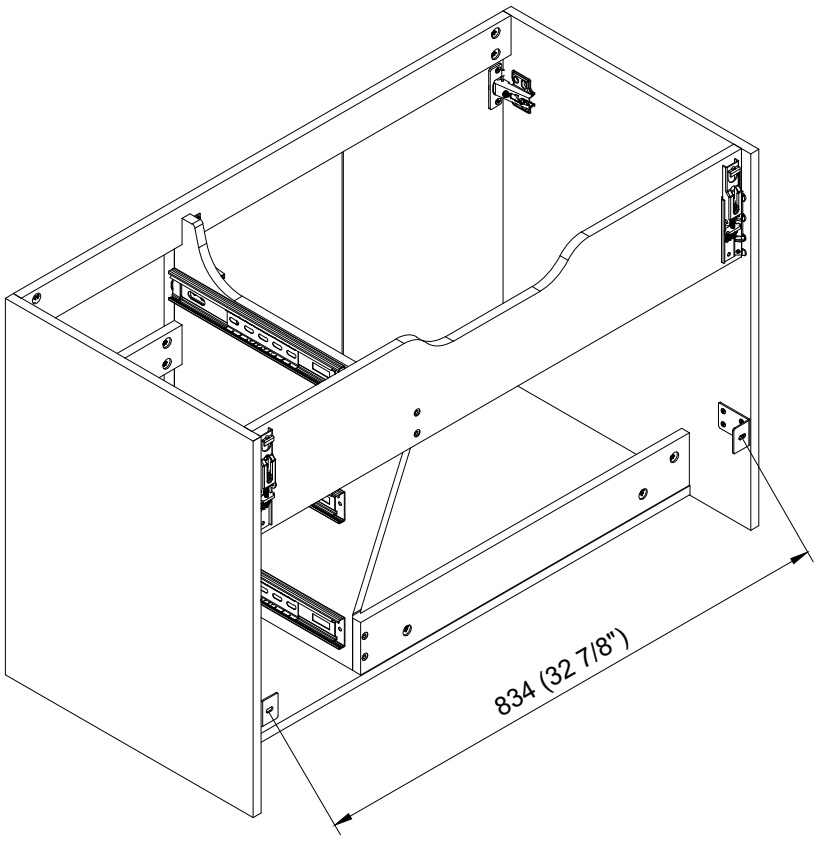

Step 27

WALL

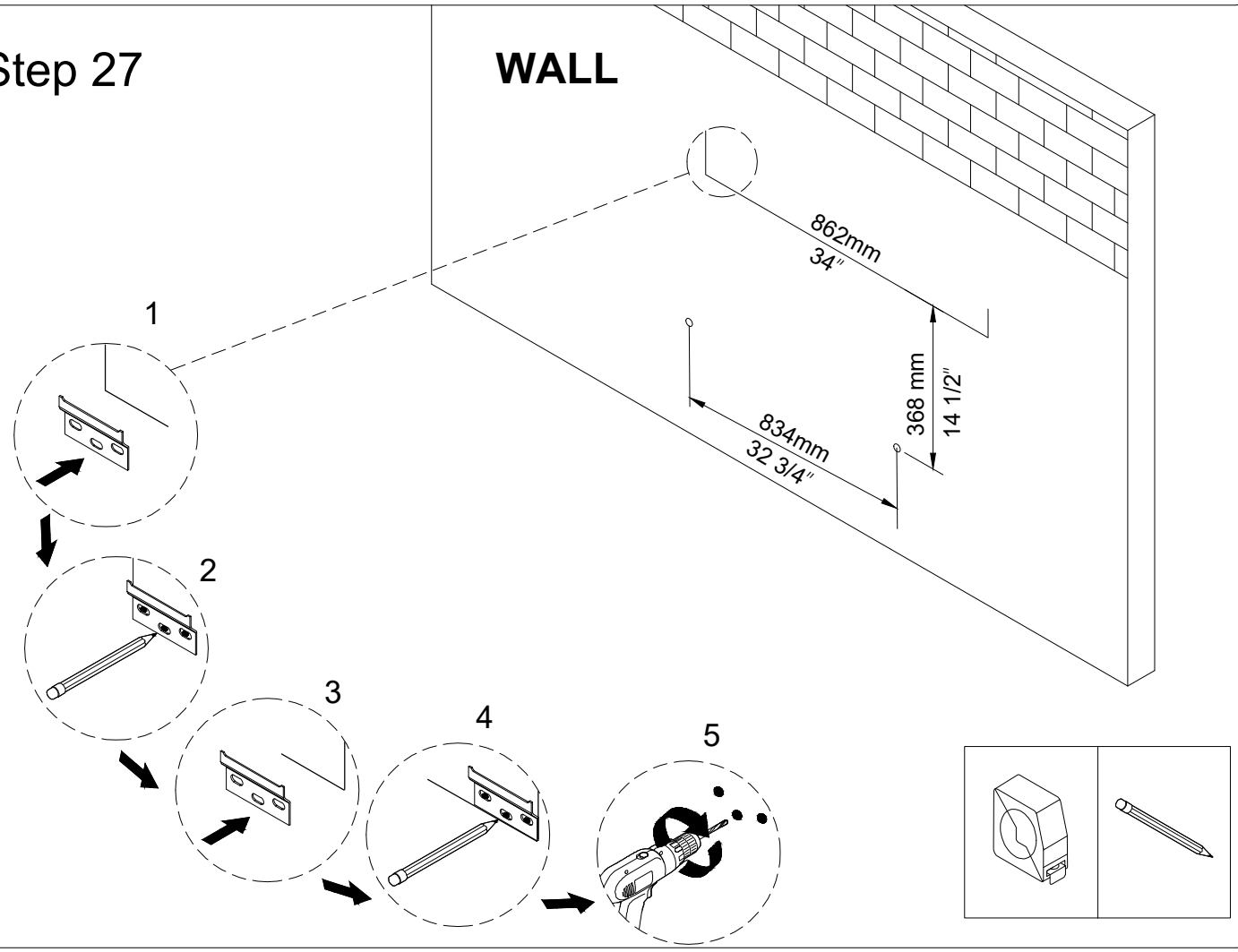

Step 28

WALL

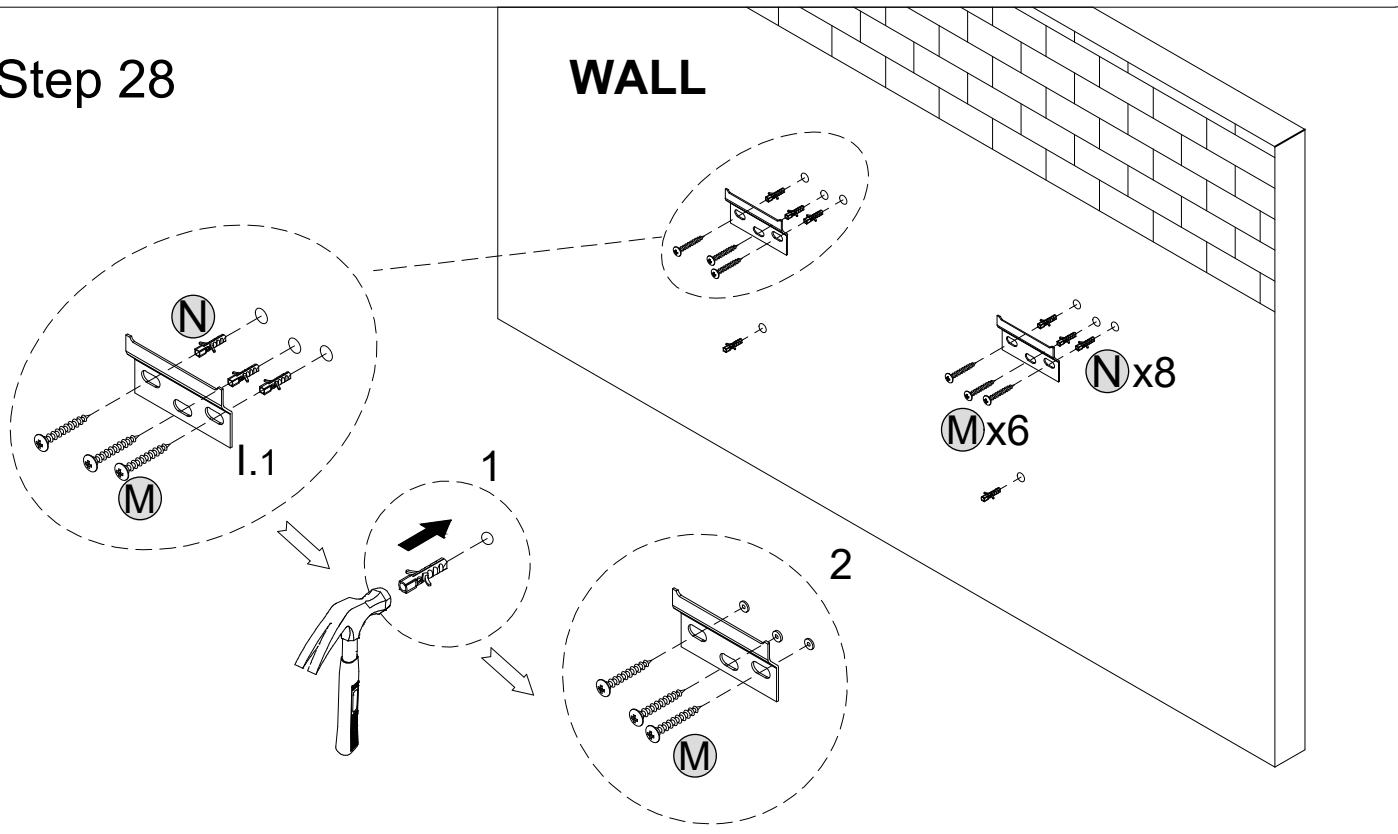

N	x8pcs
M	x6pcs
I.1	x2pcs

Step 29

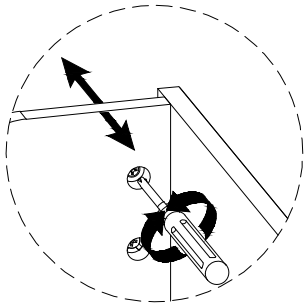

To adjust in or out

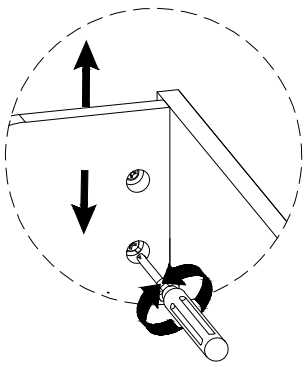

To adjust up or down

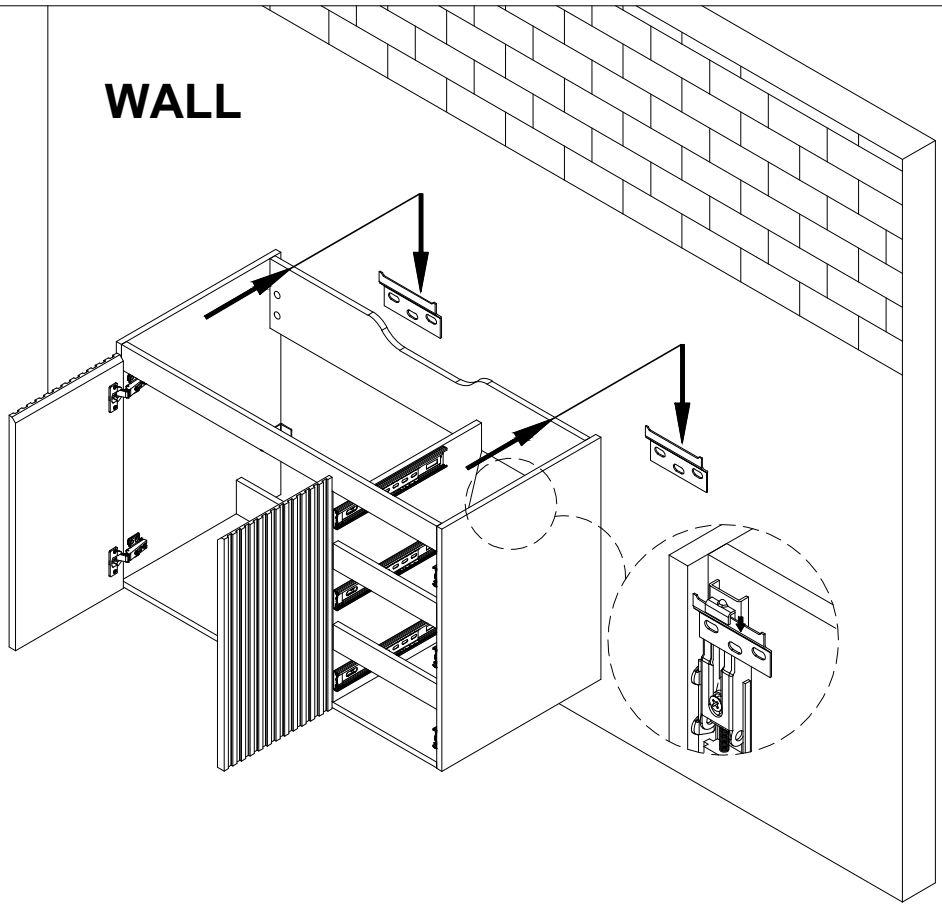

Step 30

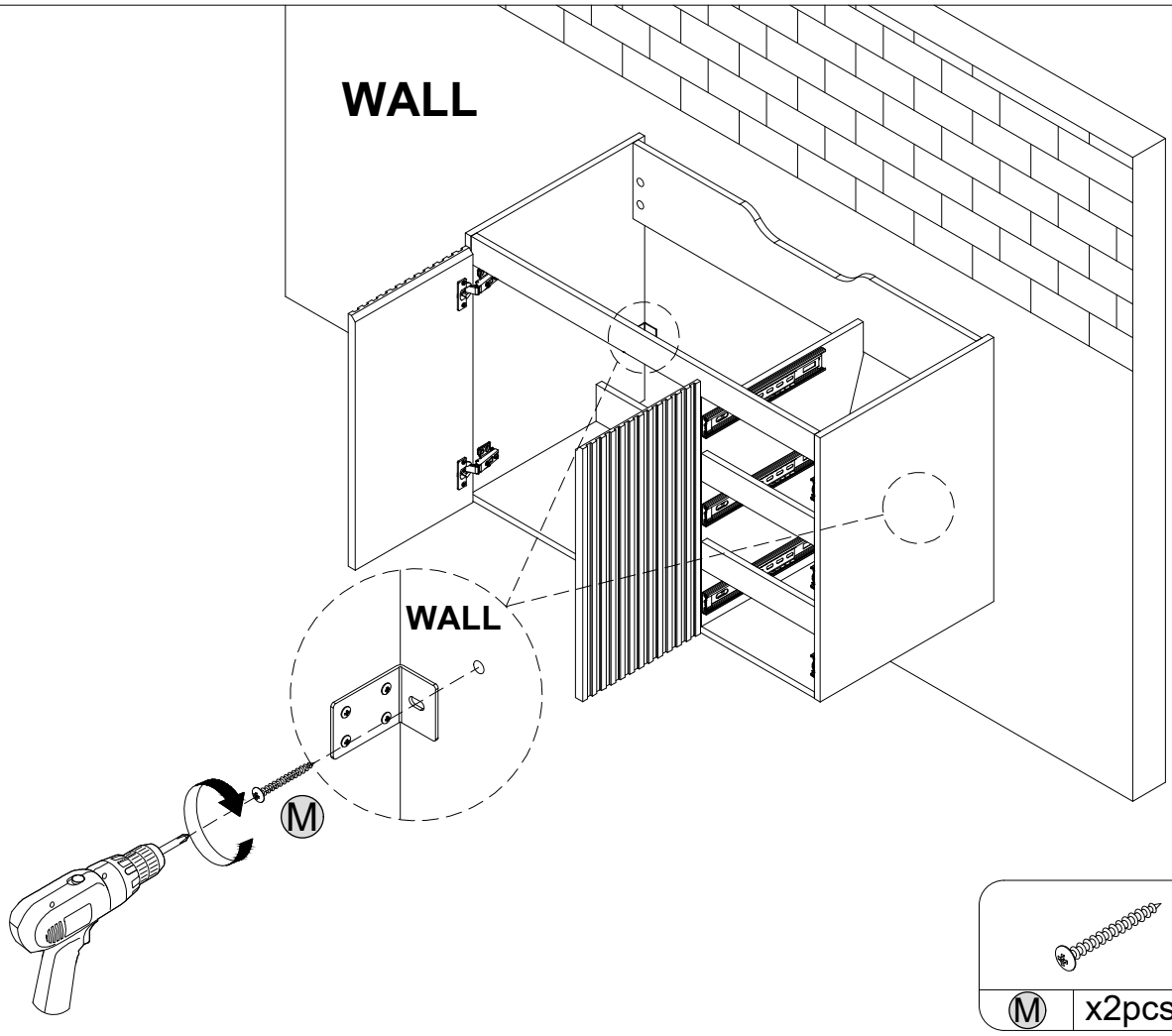

Step 31

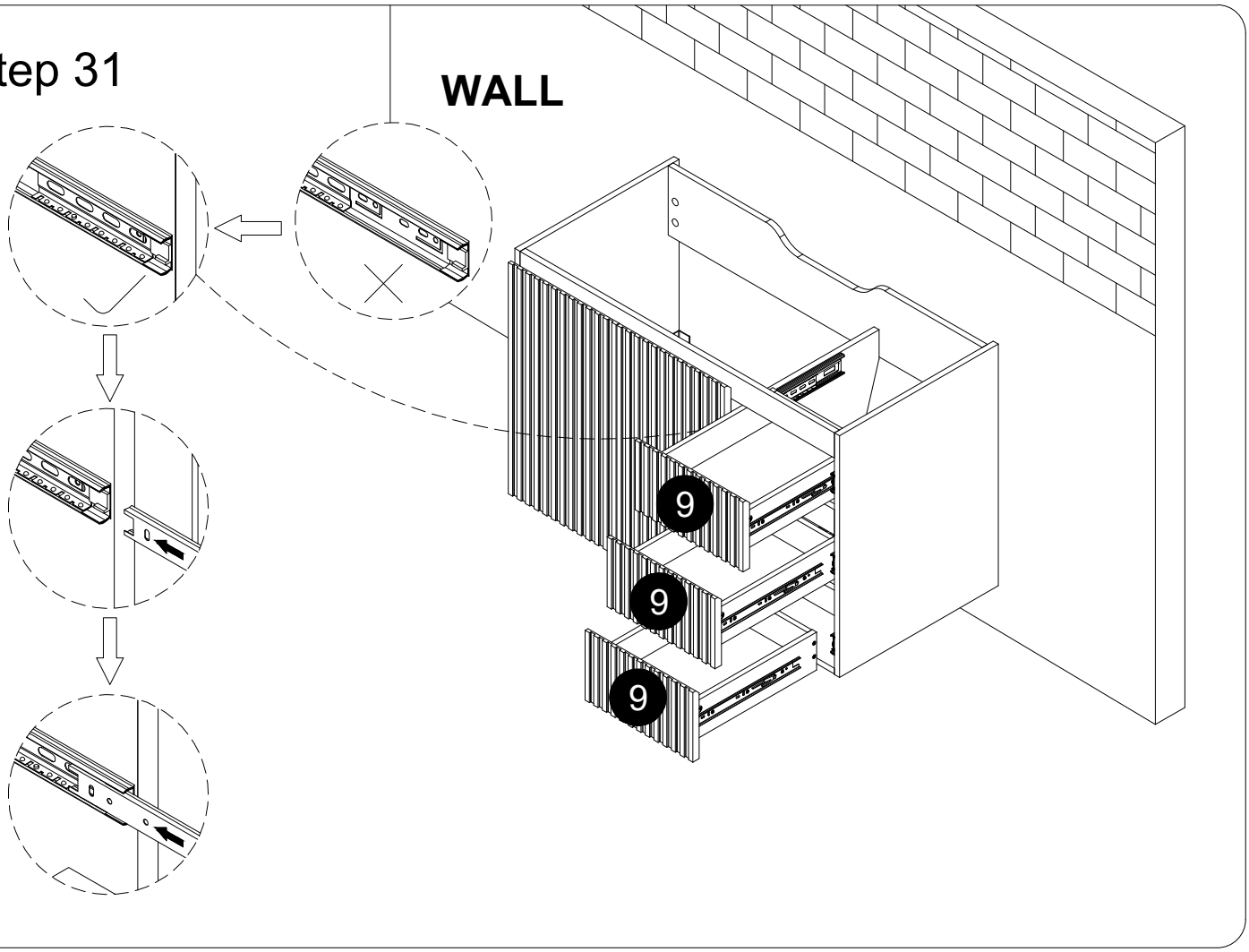

Step 32

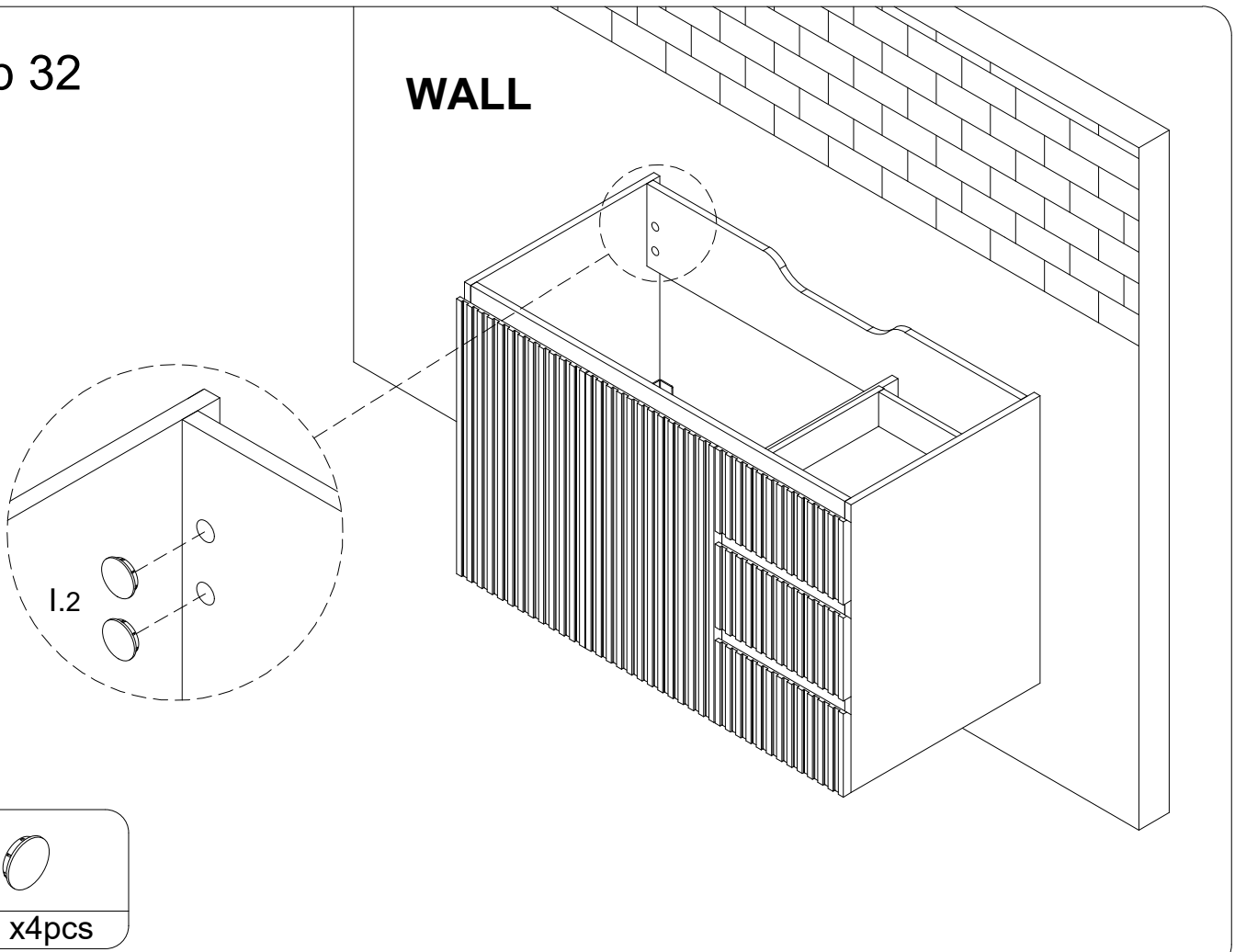

I.2	x4pcs

Step 33

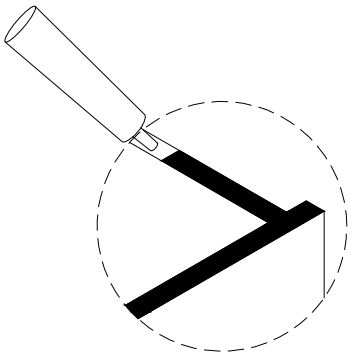

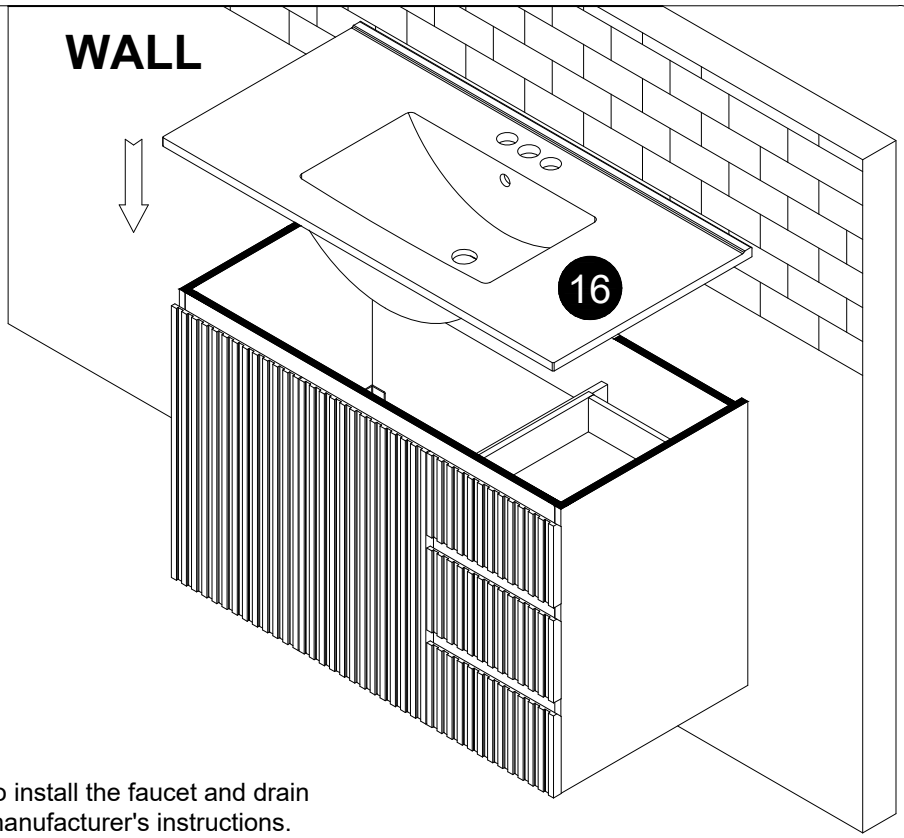

Note: At this stage it may be easier to install the faucet and drain kit (not included) to top (16) per the manufacturer's instructions.
* Apply stain free silicone or latex silicone caulk (not included) to the top edge of vanity. With the help of another adult, gently lower top (16) onto the vanity. Wipe away any excess caulk with a soft cloth, and wait approximately 24 hours for it to dry.

Step 34

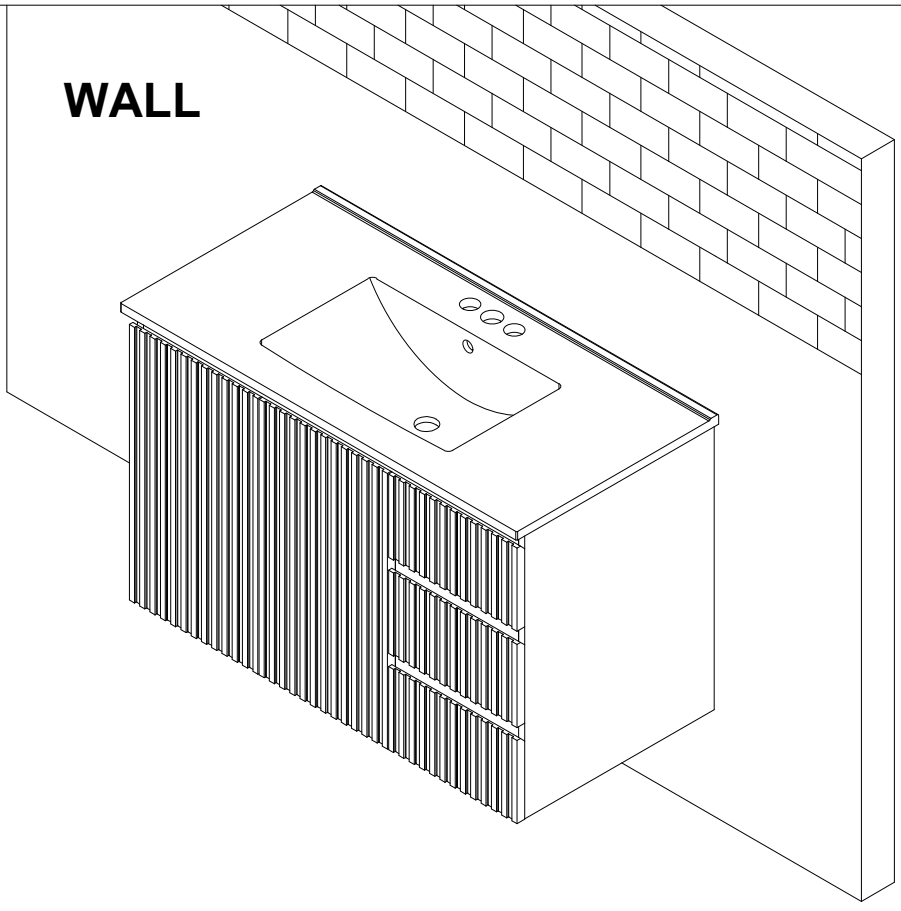

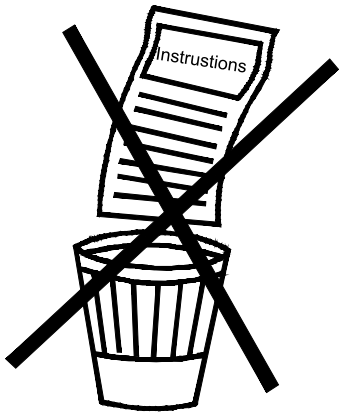

HINGE ADJUSTMENTS

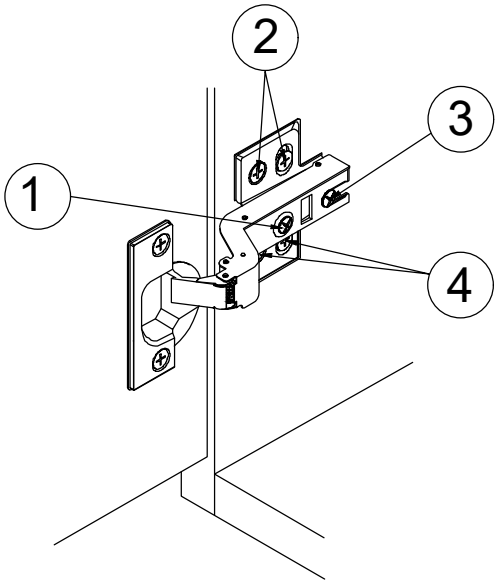

1 Sideways / Tilt adjustment

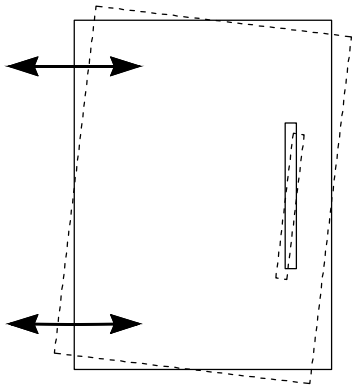

Turn the screw
clockwise to move the door further away from the side of the cabinet
anticlockwise to move the door closer to the side of the cabinet

2 4 Height adjustment

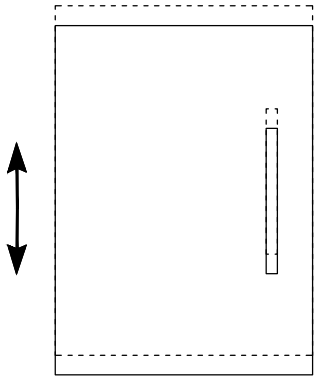

While supporting the weight of the door, turn the screws
clockwise to move the door up
anticlockwise to move the door down

3 Forward and back adjustment

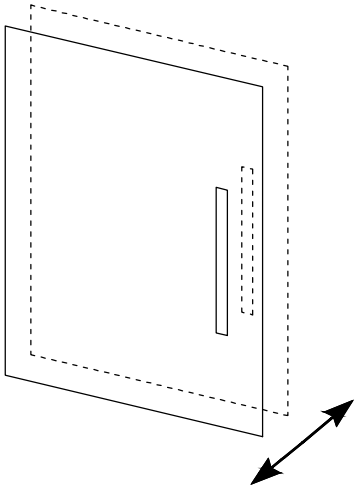

If the gap between the back of the door and the cabinet is too small, and the door may not close fully. Turn the screw
clockwise to decrease the gap between the door and the cabinet
anticlockwise to increase the gap between the door and the cabinet