FLEXSTEEL®

Power Reclining Sofa with Power Headrest, Heat & Massage

IMPORTANT NOTE

Read these instructions carefully and familiarize yourself with each procedure before assembling the furniture. Check that you have all the component parts and familiarize yourself with each part before proceeding.

Take all the fittings out of the plastic bag and separate them into groups. Ensure you have enough space to lay out all the parts before assembly. To prevent damage to the parts, we recommend that you assemble the unit on a soft, level surface.

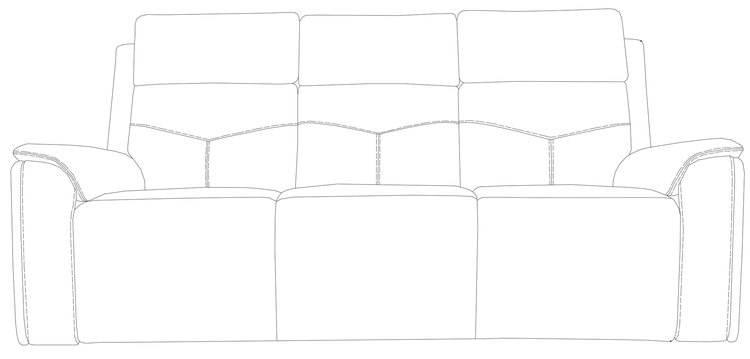

Part List

A. Left Back
1 piece

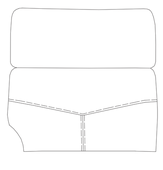

B. Right Back
1 piece

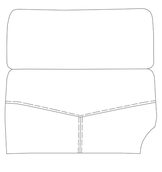

C. Center Back
1 piece

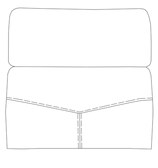

D. Seat
1 piece

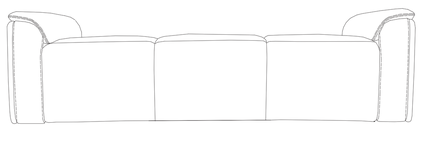

E. Left Wing
1 piece

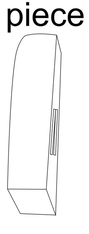

F. Right Wing
1 piece

G. Sofa Transformer
2 pieces

H. Wireless Charge Transformer
1 piece

I. AC Power Cable
2 pieces

Assembly Instructions

STEP 1

Detach the Transformers (G H) from the bottom of the seat. (See Figure 1.)

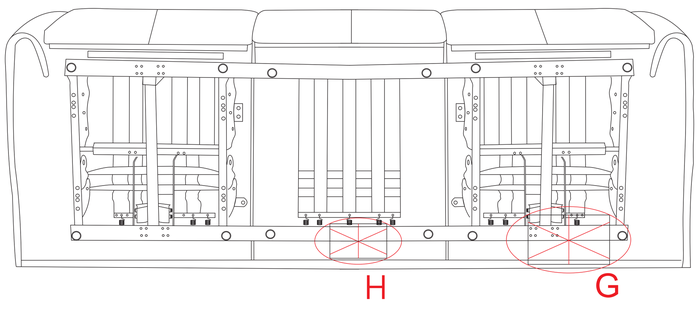

Figure 1

STEP 2

Attach the Backs (A B C) to the Seat (D), Left Wing (E) to the Left Back (A). and Right Wing (F) to the Right Back (B). Ensure the latches fit well. (See Figure 2.)

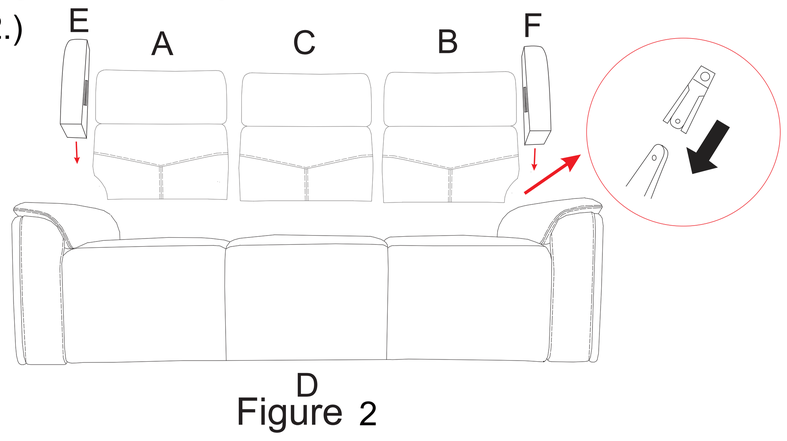

Figure 2

STEP 3

Zip the black fabric on bottom of Backs (A B) with back of Seat (D). (See Figure 3.)

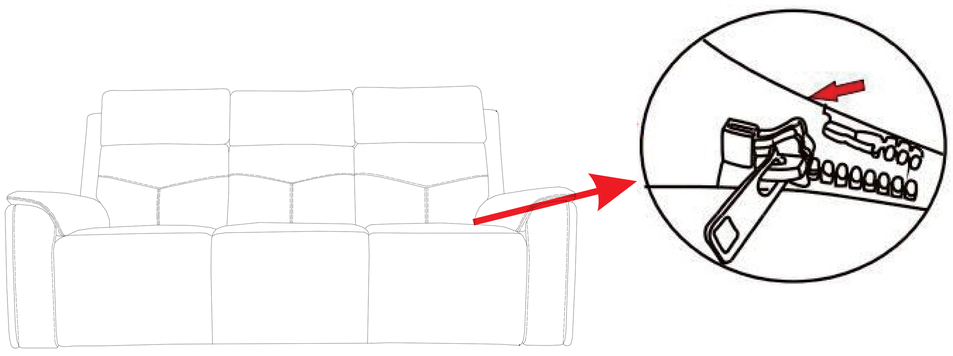

Figure 3

STEP 4

Flip up the back flaps, connect the headrest cables and air massage tubes. (See Figure 4.)

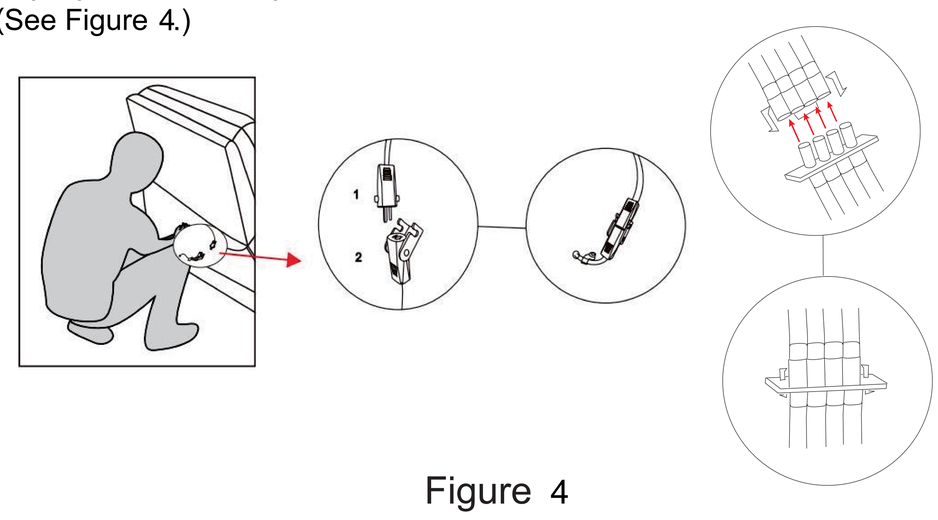

Figure 4

STEP 5

Fasten the back flaps to the bottom of the furniture. (See Figure 5.)

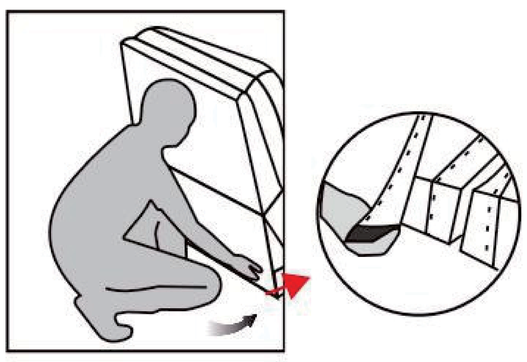

Figure 5

STEP 6

Connect the wireless charge cable to Transformer (H).
Connect the base motor cable and AC power cable (I) to Transformer (G).
Plug the AC power cables and waireless charger transformer into nearby outlets.
(See Figure 6.)

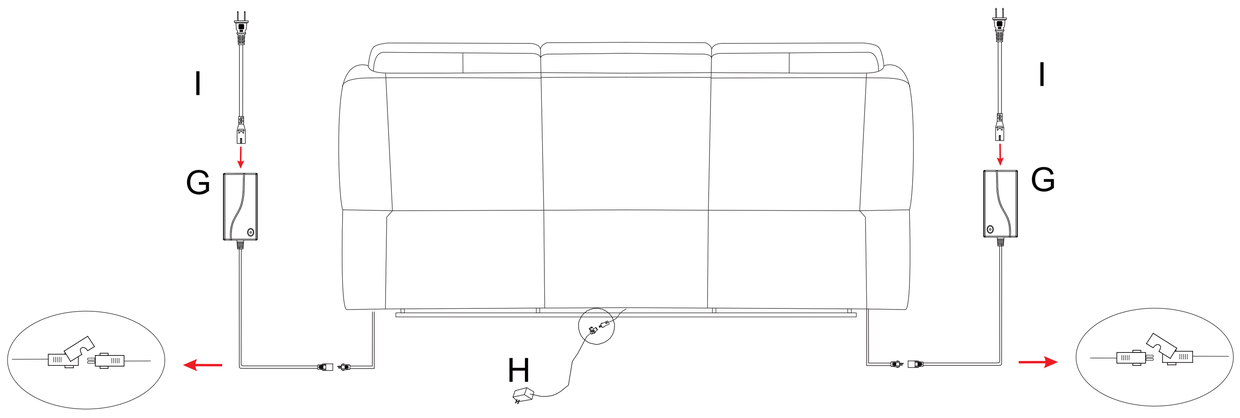

Figure 6

Disassembly Instructions

Unzip the zipper between Backs (A B) and Seat (D), then disconnect the headrest cables and air massage tubes.
Pull up the spring leaf in bracket, then lift Backs (A B C) up. (See Figure 7.)

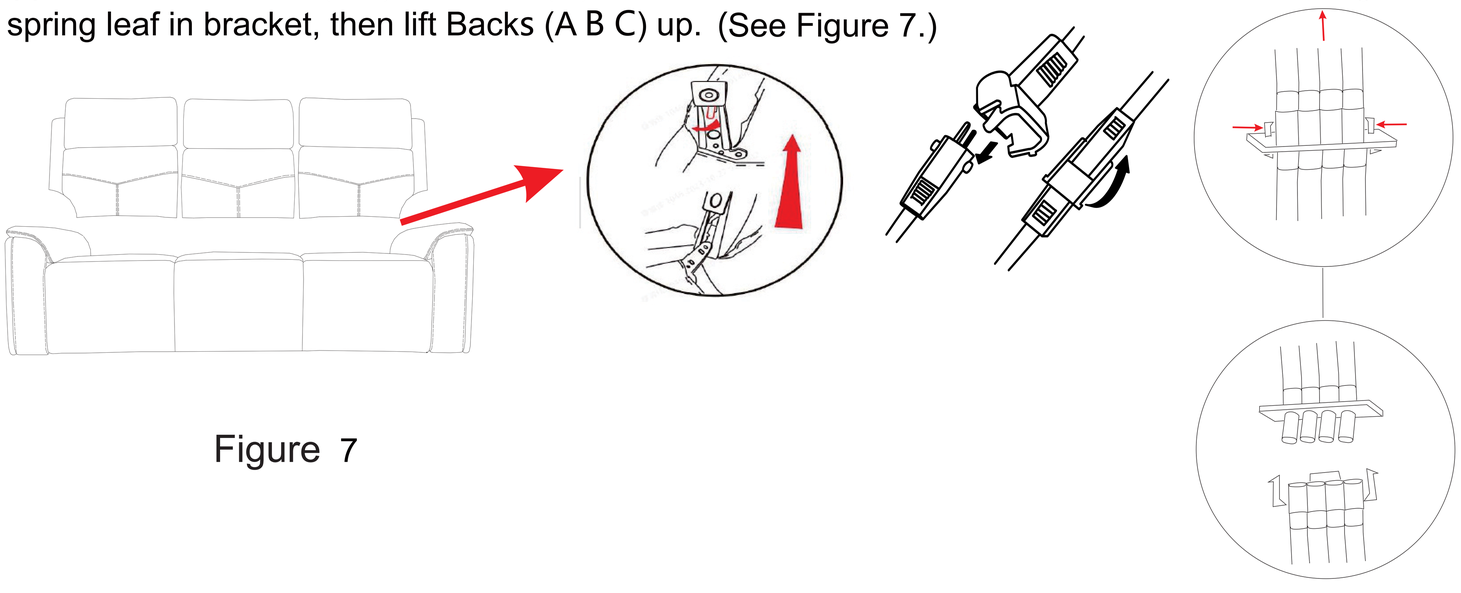

Figure 7

Drop Down Center Back

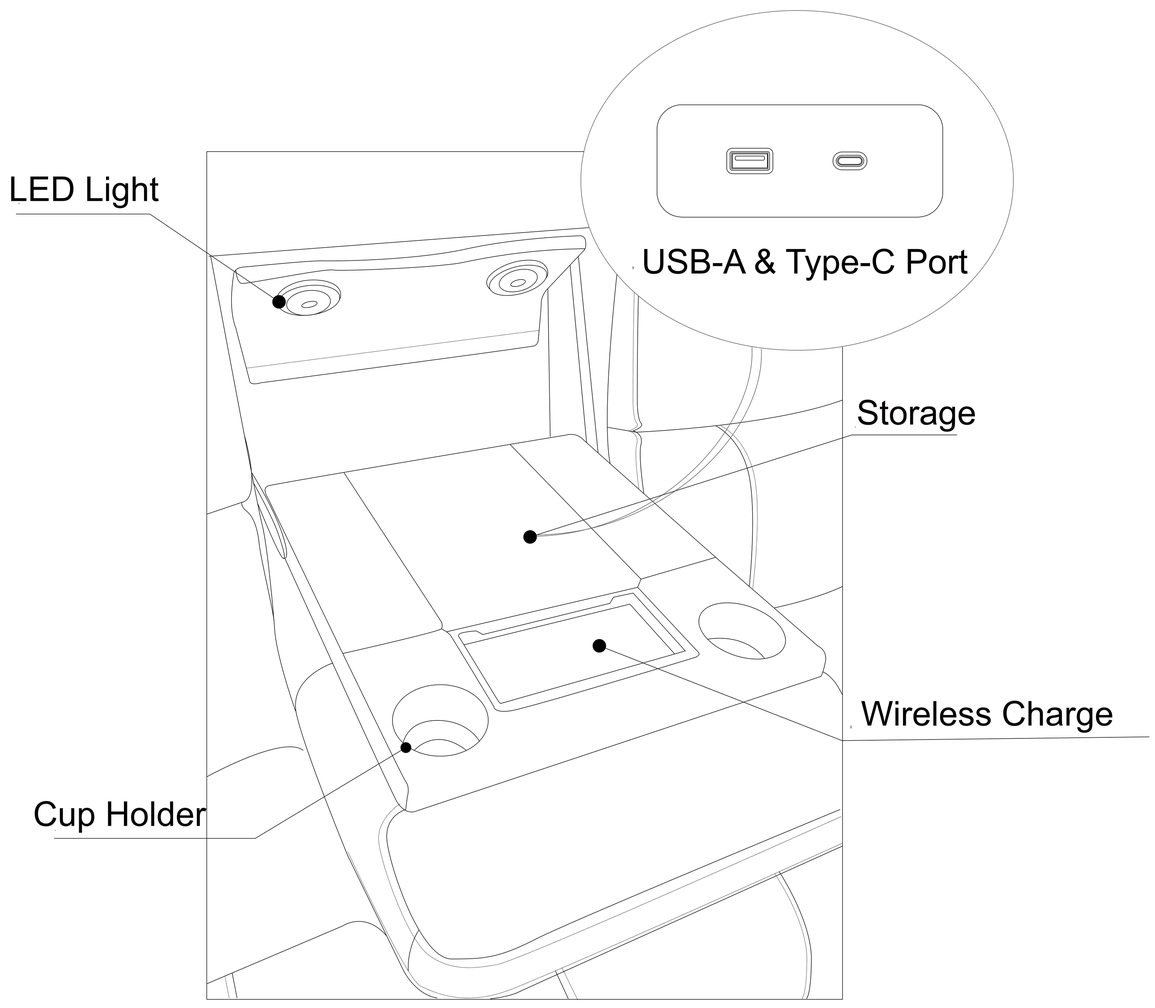

How to Use LED Light

Press the middle of LED lights to activate the LED light.

Press the middle of LED lights again to activate the stronger LED light.

Press the middle of LED lights again to turn off the light.

Hidden Cup Holder

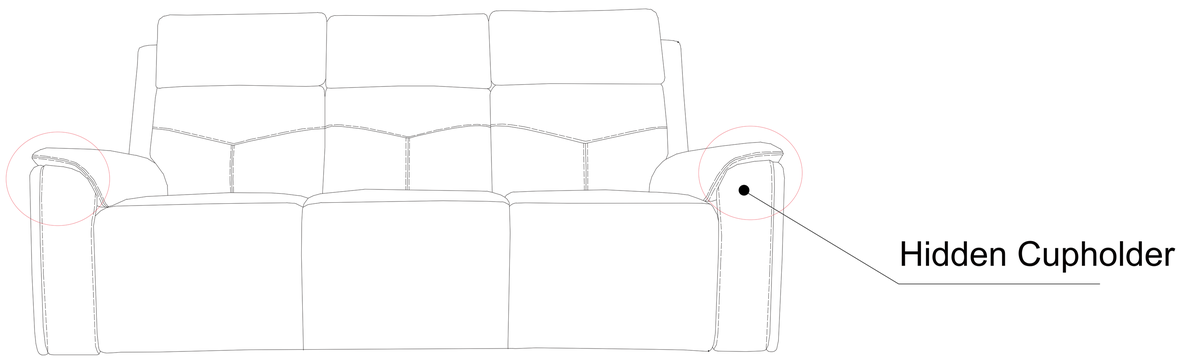

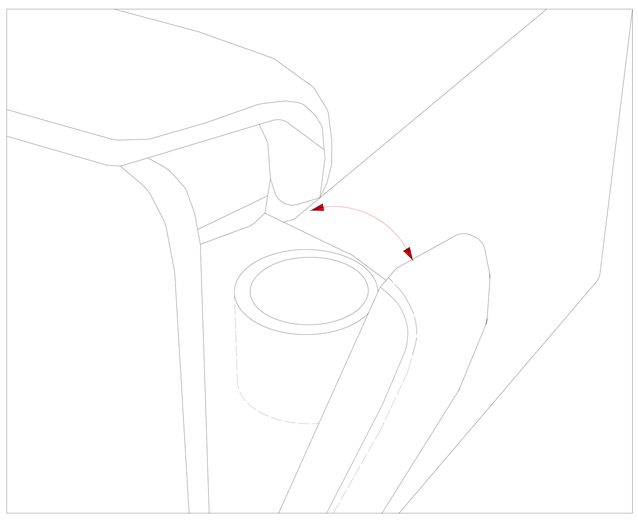

IMPORTANT NOTE

- To avoid any risk of suffocation to children or pets, dispose of all plastic bags immediately.
- To ensure proper performance, occasionally check for loose hardware and tighten as needed.
- If the reclining functions are not working properly, check for loose cable connections before contacting the retailer.