ASSEMBLY INSTRUCTION FOR

Thayler Console Table

Hardware List			
A		Bolt 40 x 8 mm	16
B		Washer 20 x 8 mm	16
C		Bolt 50 x 15 mm	02
D		Washer 40 x 16 mm	02
E	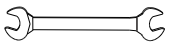	Spanner 12/13	01
F	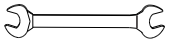	Spanner 25/28	01

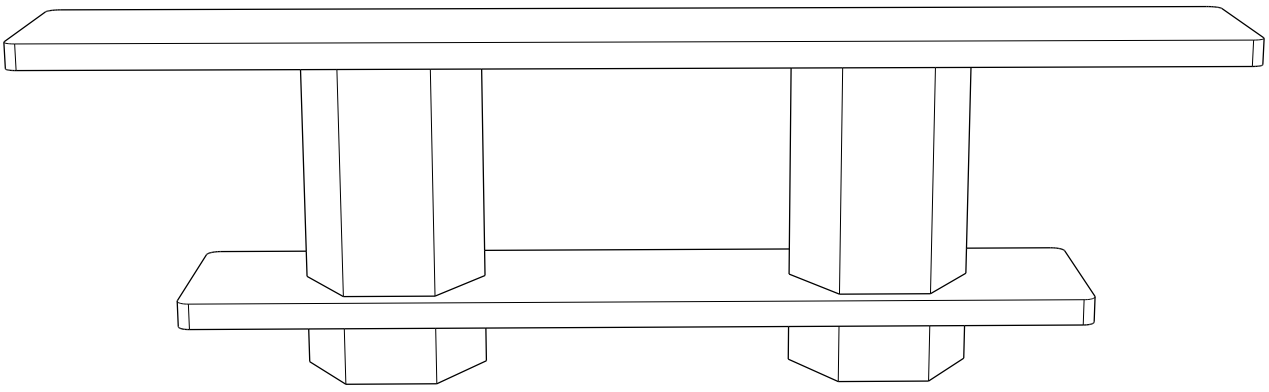

Made in India

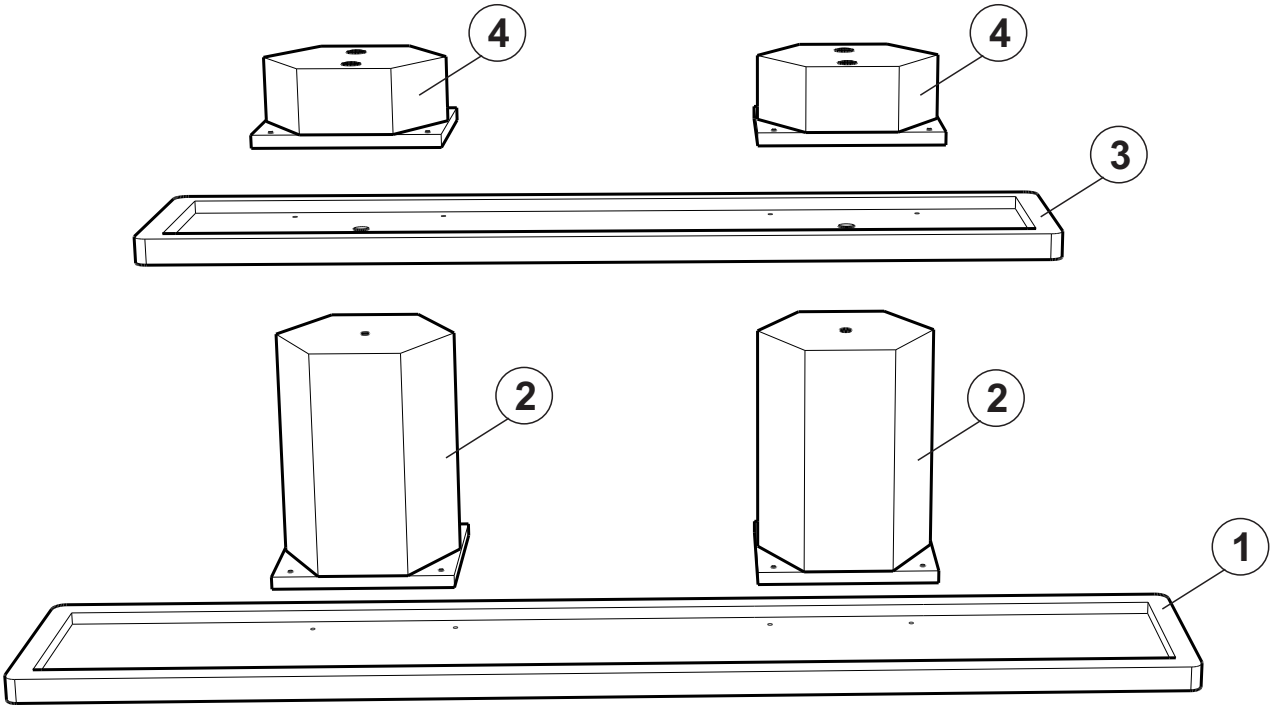

Step 1

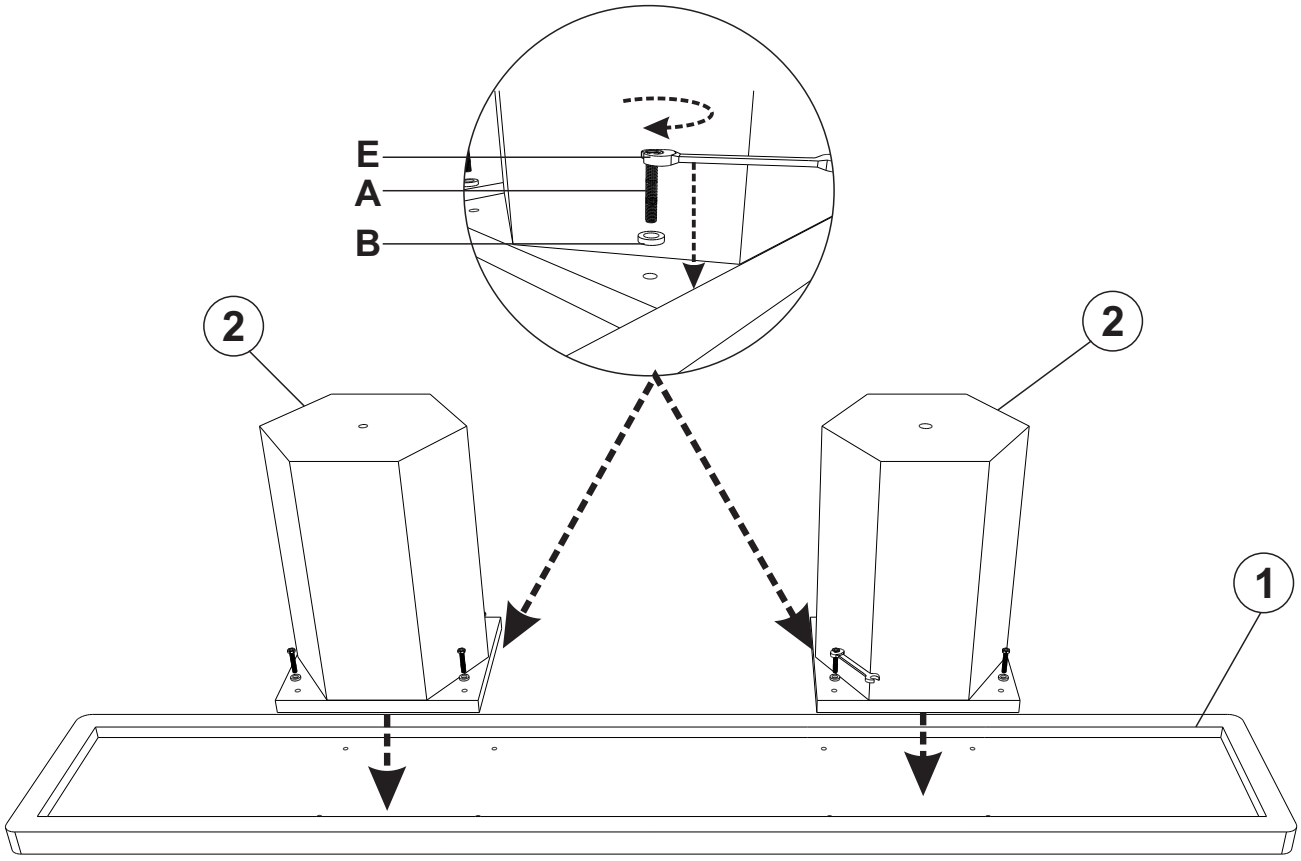

Made in India

Step 2

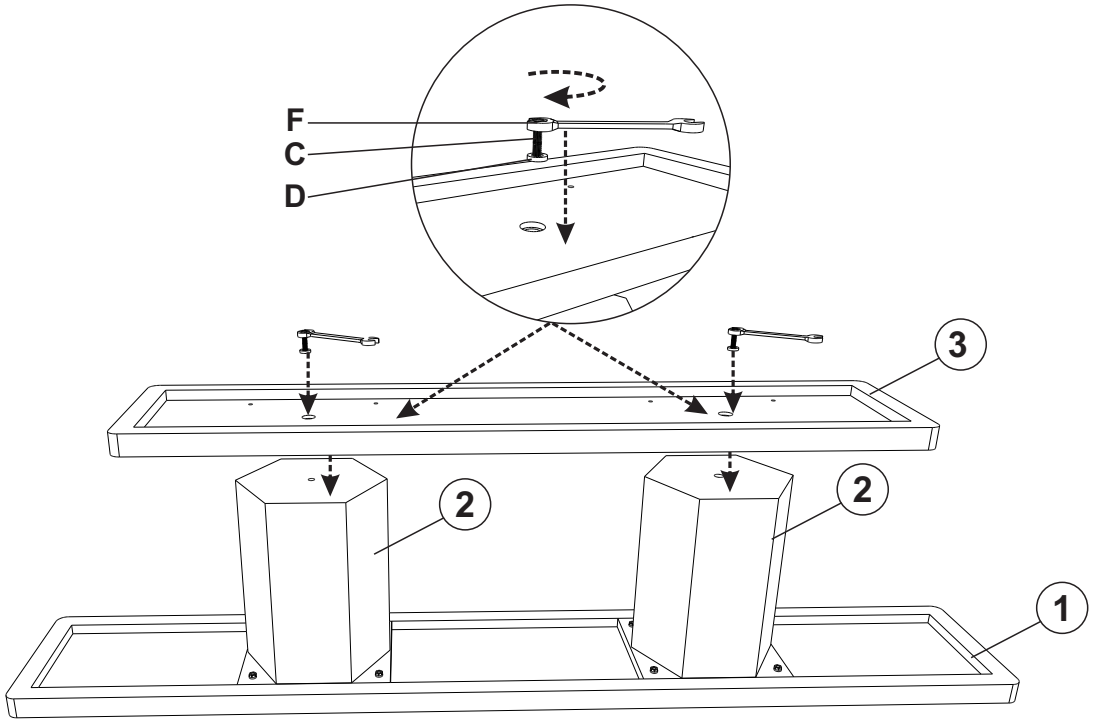

Step 3

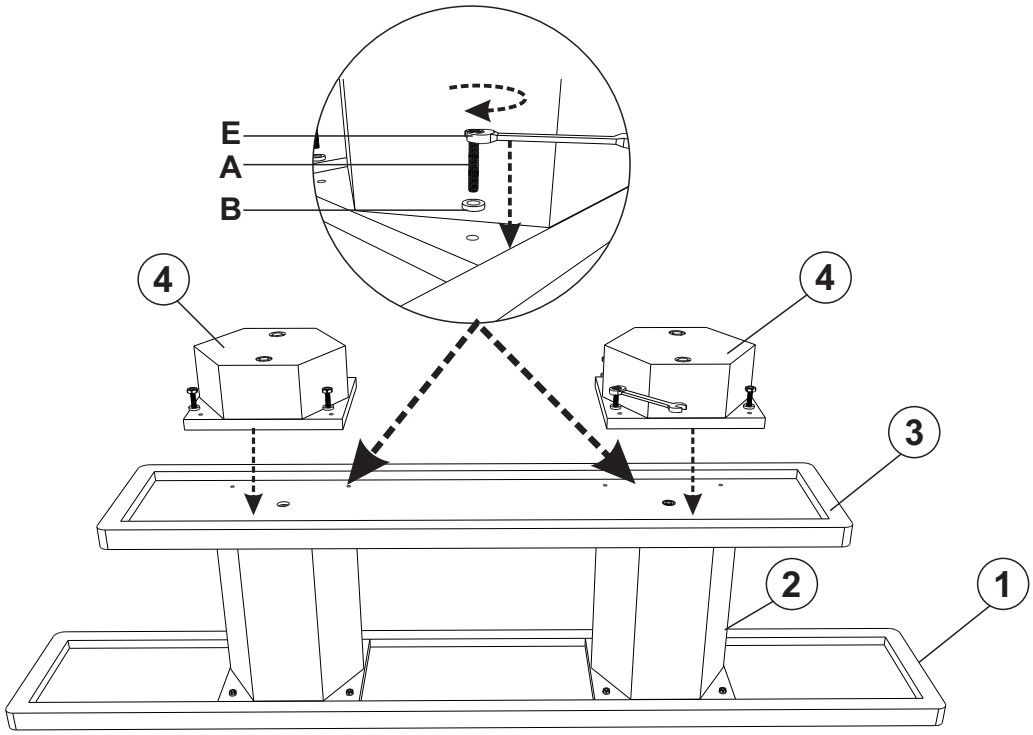

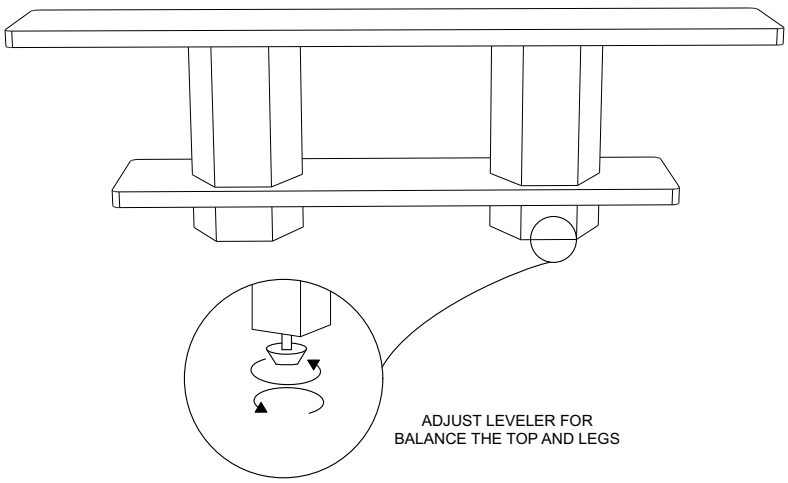

Made in India