KB951,2,3,4,5,6PN,7,7SB,8,9
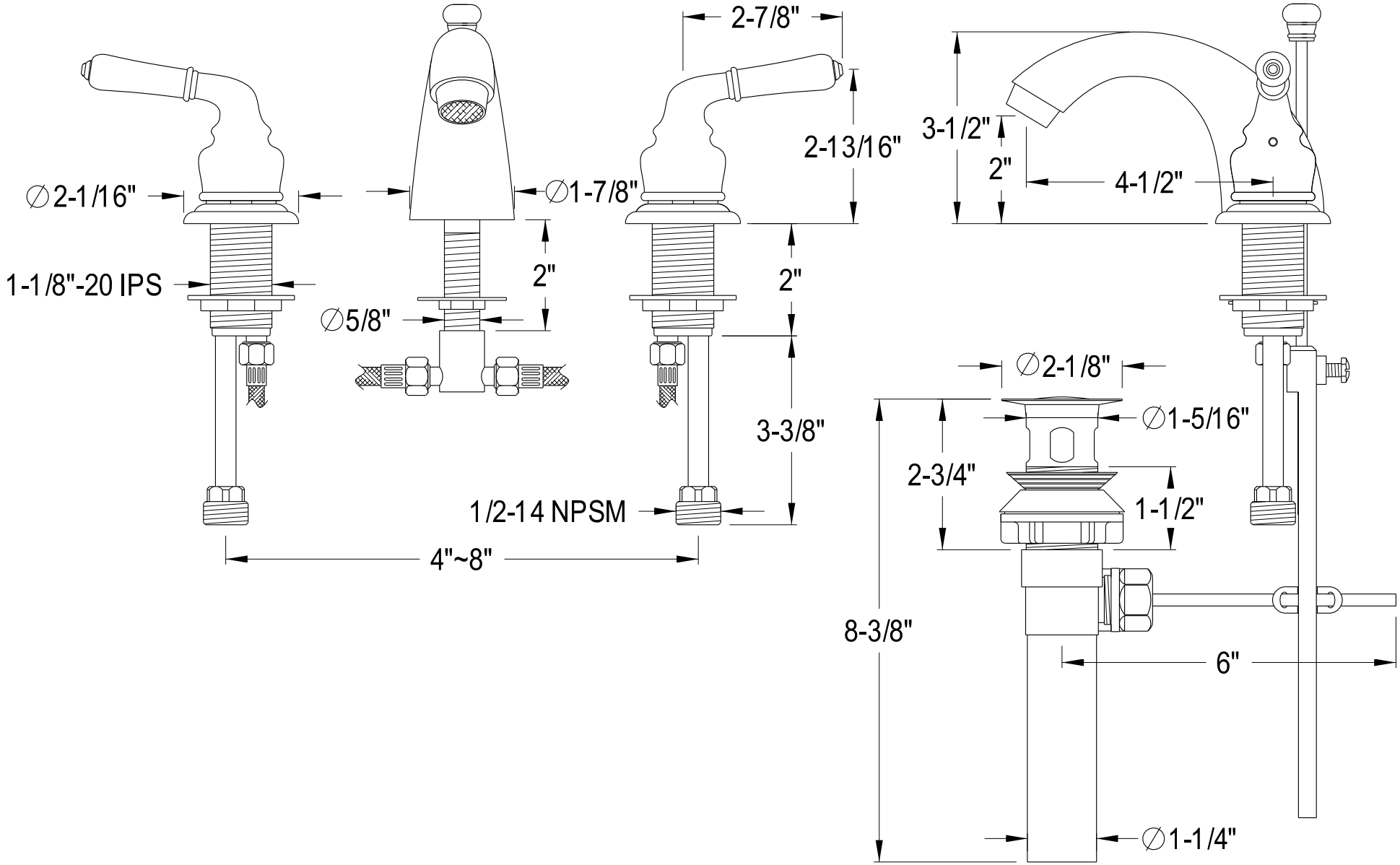
Mini Widespread Lavatory Faucet With Retail Pop-Up