Montageanleitung | Instructions de montage
Assembly Instructions| Instrucciones de montaje

N652P528824/N652P528825

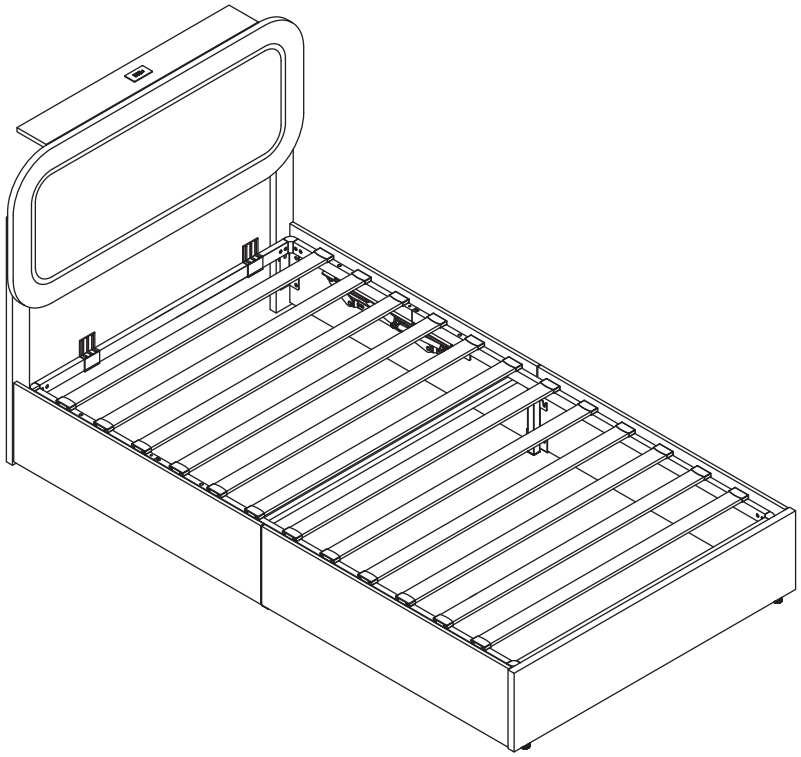

FR Cet appareil, ses cordons, et batterie se recyclent
À DÉPOSER EN MAGASIN OU À DÉPOSER EN DÉCHÈTERIE
Points de collecte sur www.quefairedemesdechets.fr
Privilégiez la réparation ou le don de votre appareil !

GB This set comes in 2 boxes. If you do not receive a full set of 2 boxes, please contact our customer service.

DE Dieses Set wird in 2 Schachteln geliefert. Wenn Sie nicht ein komplettes Set von 2 Boxen erhalten, kontaktieren Sie bitte unseren Kundenservice.

FR Ce set est livré en 2 boîtes. Si vous ne recevez pas un jeu complet de 2 boîtes, veuillez contacter notre service clientèle.

English

IMPORTANT FOR GAS LIFT BEDS&MAINTAINCE

- Please place the mattress on top of the bed frame.
- Please do not pull on the strap handles.
- Please press heavily to release the compressed gas.
- Periodically check all screw & fixings to ensure they are secure.
- When moving your product, carefully lift into place.
- Wipe clean with a slightly damp cloth- please do not use abrasive chemicals or bleach.
- Do NOT allow children to operate the lift mechanism.
- Do NOT allow children near the lift base when operating the mechanism.
- Do NOT stand inside the bed or the internal storage base.
- Do NOT overload the internal storage base.
- DO NOT jump on the product or any of its parts.

Deutsch

WICHTIG FÜR GASLIFT-BETTEN&WARTUNG

- Bitte legen Sie die Matratze oben auf den Bettrahmen.
- Bitte ziehen Sie nicht an den Gurtgriffen.
- Bitte drücken Sie kräftig, um das komprimierte Gas freizusetzen.
- Überprüfen Sie regelmäßig alle Schrauben und Befestigungen, um sicherzustellen, dass sie sicher sind.
- Wenn Sie Ihr Produkt bewegen, heben Sie es vorsichtig an seinen Platz.
- Mit einem leicht feuchten Tuch abwischen - bitte keine scheuernden Chemikalien oder Bleichmittel verwenden.
- Erlauben Sie Kindern NICHT, den Hebemechanismus zu bedienen.
- Lassen Sie Kinder NICHT in die Nähe des Liftsockels, wenn Sie den Mechanismus bedienen.
- Stellen Sie sich NICHT in das Bett oder in die Innenablage.
- Überlasten Sie den internen Liftsockel NICHT.
- Springen Sie NICHT auf das Produkt oder eines seiner Teile.

Français

IMPORTANT POUR LES LITS À RELEVAGE DE GAZ&MAINTENANCE

- Veuillez placer le matelas sur le dessus du cadre de lit.
- Ne tirez pas sur les poignées de la sangle.
- Appuyez fortement pour libérer le gaz comprimé.
- Vérifiez régulièrement que toutes les vis et fixations sont bien en place.
- Lorsque vous déplacez votre produit, soulevez-le avec précaution pour le mettre en place.
- Nettoyez avec un chiffon légèrement humide - n'utilisez pas de produits chimiques abrasifs ou d'eau de Javel.
- Ne laissez pas les enfants utiliser le mécanisme de levage.
- Ne laissez pas les enfants s'approcher de la base de levage lorsqu'ils actionnent le mécanisme.
- Ne vous tenez PAS à l'intérieur du lit ou de la base de stockage interne.
- Ne surchargez pas la base de stockage interne.
- Ne pas sauter sur le produit ou l'une de ses parties.

Italiano

IMPORTANTE PER I LETTI CON SOLLEVAMENTO A GAS E LA MANUTENZIONE

- Posizionare il materasso sopra la struttura del letto.
- Non tirare le maniglie della cinghia.
- Premere con forza per rilasciare il gas compresso.
- Controllare periodicamente tutte le viti e i fissaggi per assicurarsi che siano saldi.
- Quando si sposta il prodotto, sollevarlo con cautela.
- Pulire con un panno leggermente umido, senza usare prodotti chimici abrasivi o candeggina.
- NON permettere ai bambini di azionare il meccanismo di sollevamento.
- NON permettere ai bambini di avvicinarsi alla base di sollevamento quando si aziona il meccanismo.
- NON sostare all'interno del letto o della base di contenimento interna.
- NON sovraccaricare la base di contenimento interna.
- NON saltare sul prodotto o sulle sue parti.

Español

IMPORTANTE PARA LAS CAMAS ELEVADORAS DE GAS&MANTENIMIENTO

- Coloque el colchón sobre el somier.
- No tire de las asas de la correa.
- Presione con fuerza para liberar el gas comprimido.
- Compruebe periódicamente que todos los tornillos y fijaciones estén bien sujetos.
- Al mover el producto, levántelo con cuidado para colocarlo en su sitio.
- Limpie con un paño ligeramente humedecido; no utilice productos químicos abrasivos ni lejía.
- NO permita que los niños accionen el mecanismo de elevación.
- NO permita que los niños se acerquen a la base elevadora cuando accionen el mecanismo.
- NO se ponga de pie dentro de la cama o de la base de almacenamiento interna.
- NO sobrecargue el somier.
- NO salte sobre el producto ni sobre ninguna de sus piezas.

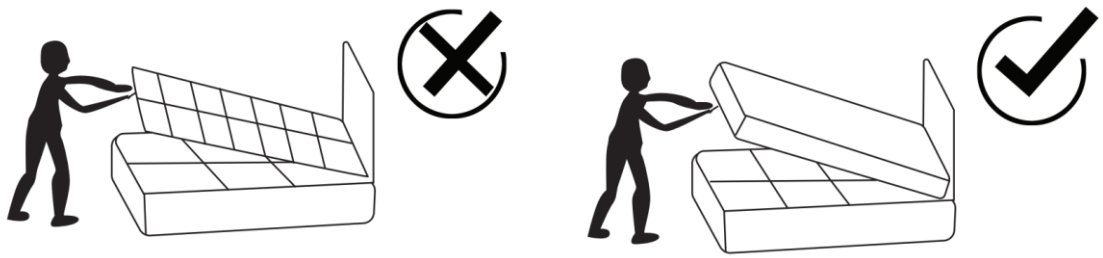

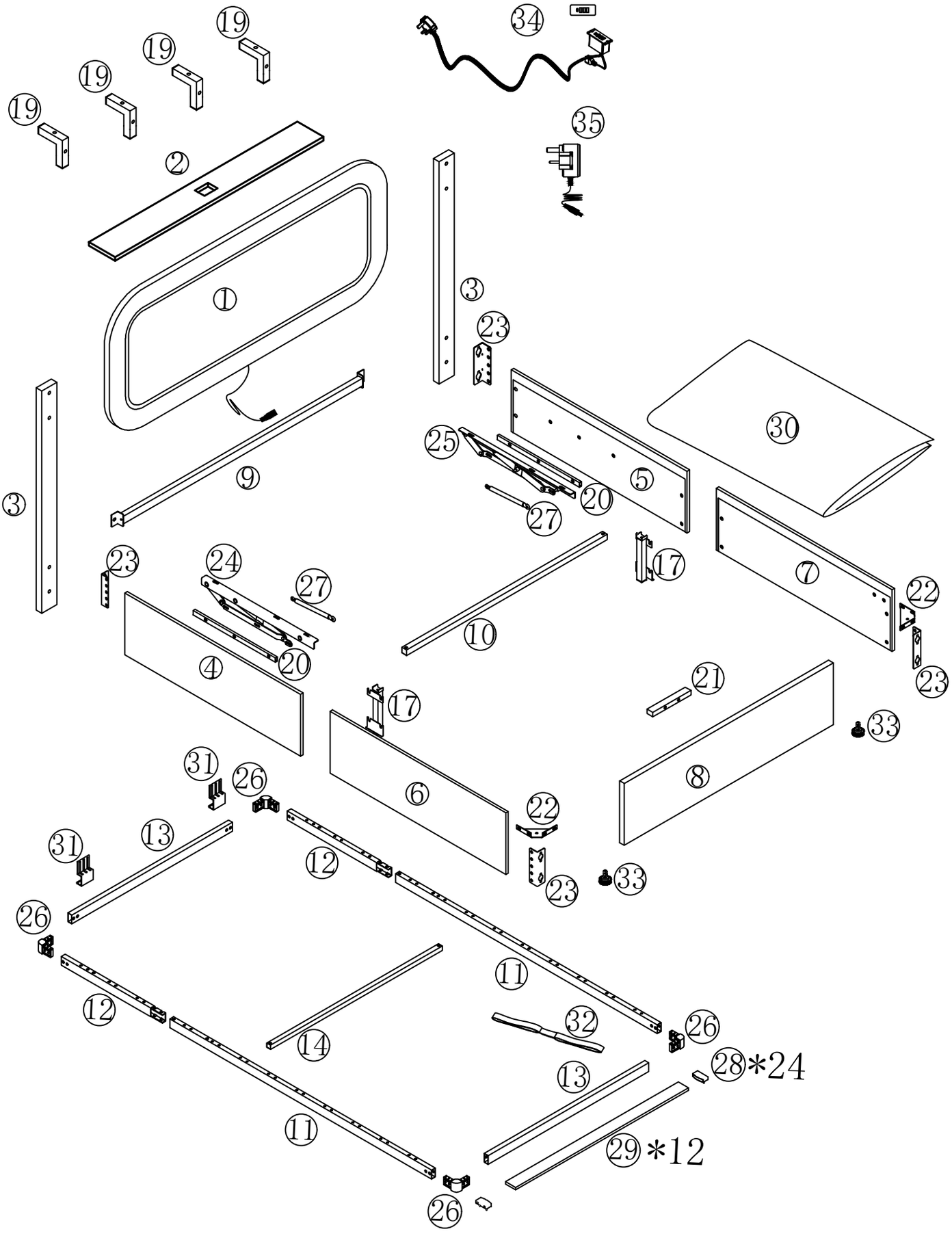
19
19
19
19
34
35
2
1
3
23
30
25
5
20
27
9
3
23
24
27
17
7
22
10
20
4
23
21
17
33
31
26
6
8
22
13
31
12
23
33
26
11
12
32
26
14
28*24
13
11
29*12
26

N652P528824

① 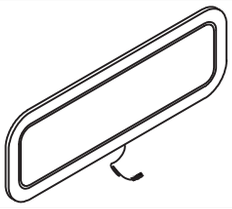 X 1	② 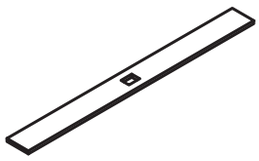 X 1
③  X 2	④ 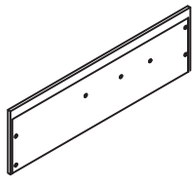 X 1
⑤ 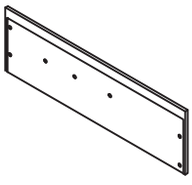 X 1	⑥ 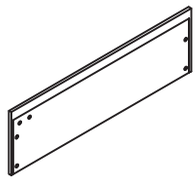 X 1
⑦ 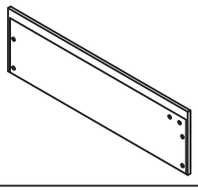 X 1	⑰ 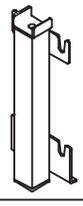 X 2
⑲ 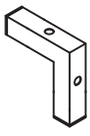 X 4	⑳ 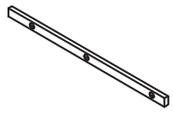 X 2
㉑ 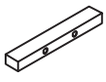 X 1	㉒  X 2
㉓ 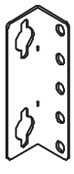 X 4	㉔  X 1
㉕ 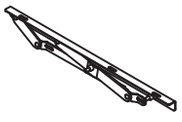 X 1	㉖  X 4
㉗ 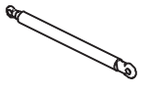 X 2	㉘ 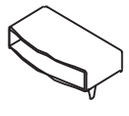 X 24

N652P52824

30 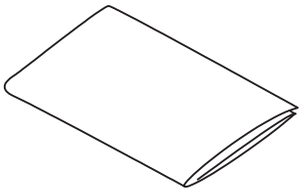 X 1	31 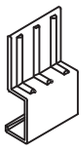 X 2
32  X 1	33  X 2
34  X 1	35  X 1

Hardware List-Hardware-Liste-Liste du matériel
N652P528824

Ⓐ 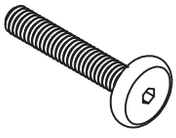 5/16"x55mm x 8	Ⓑ 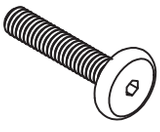 5/16"x45mm x 8	Ⓒ 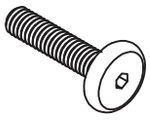 5/16"x40mm x 9	Ⓓ 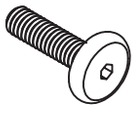 5/16"x30mm x 6
Ⓔ  5/16"x16mm x 50	Ⓕ  5/16" x 10	Ⓖ  3 X 12MM x 2	Ⓗ 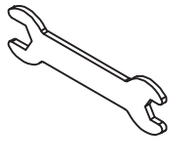 x 1
Ⓙ 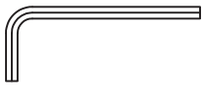 4MM x 1			

⑧ 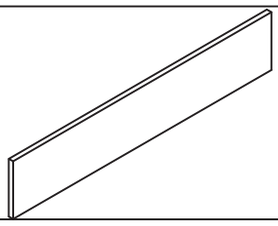 X 1	⑨ 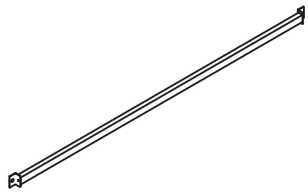 X 1
⑩ 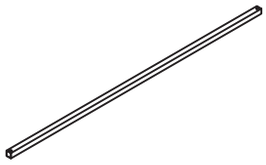 X 1	⑪ 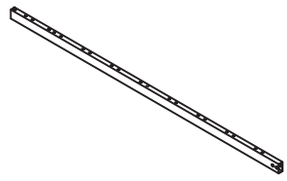 X 2
⑫ 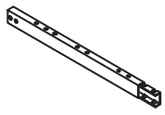 X 2	⑬ 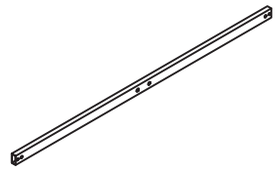 X 2
⑭ 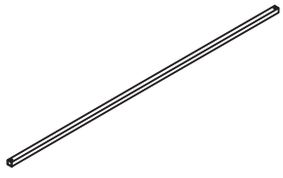 X 1	29 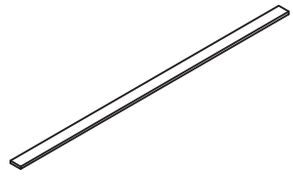 X 12

STEP 1

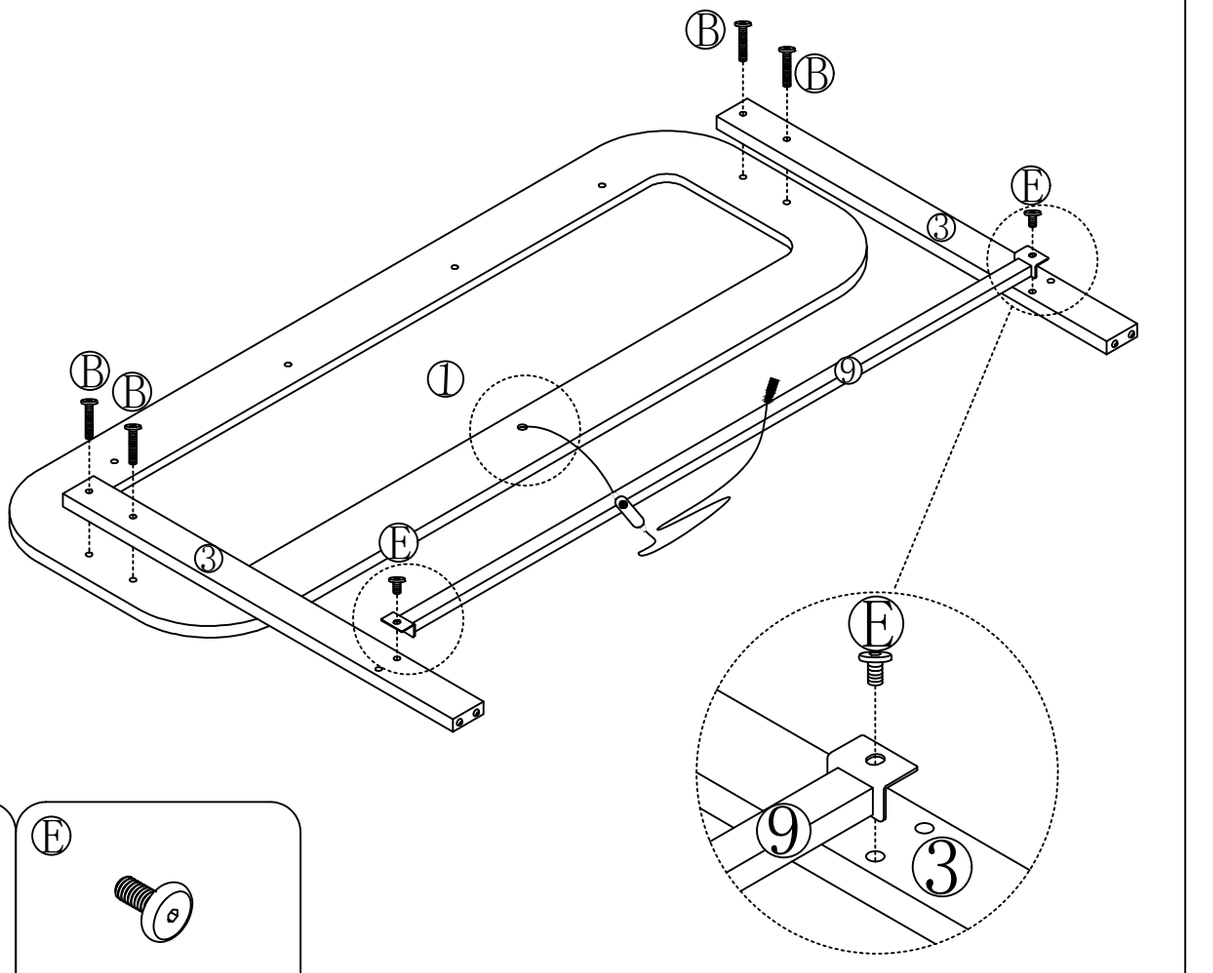

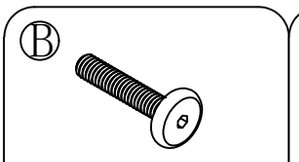

5/16"x45mm x 4

5/16"x16mm x 2

STEP 2

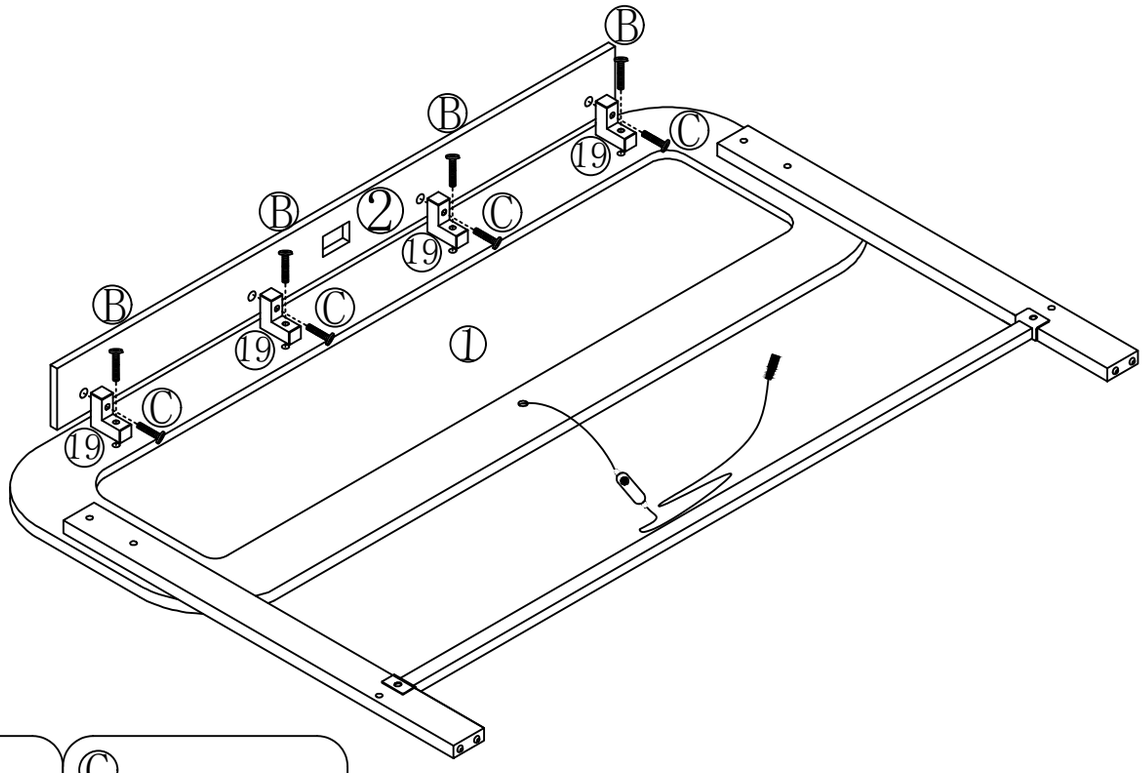

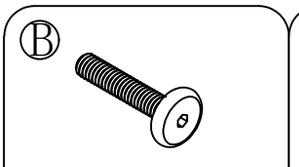

5/16"x45mm x 4

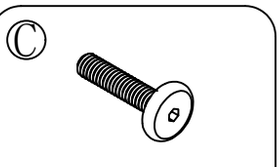

5/16"x40mm x 4

STEP 3

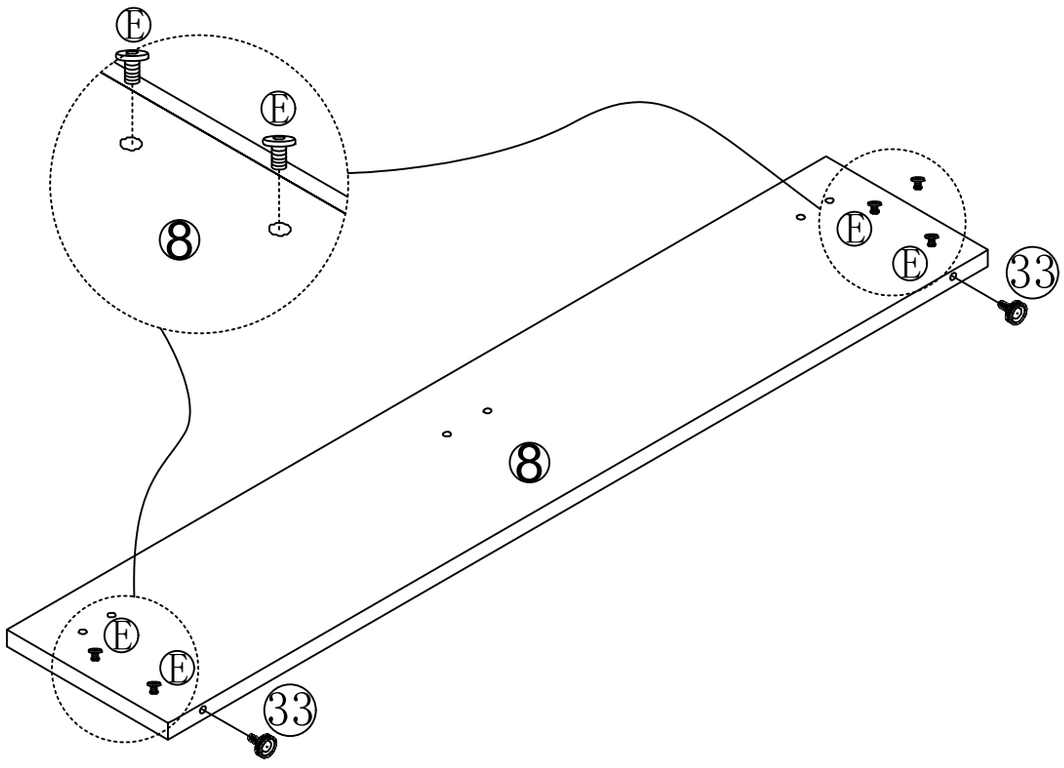

E

5/16"x16mm x 4

STEP 4

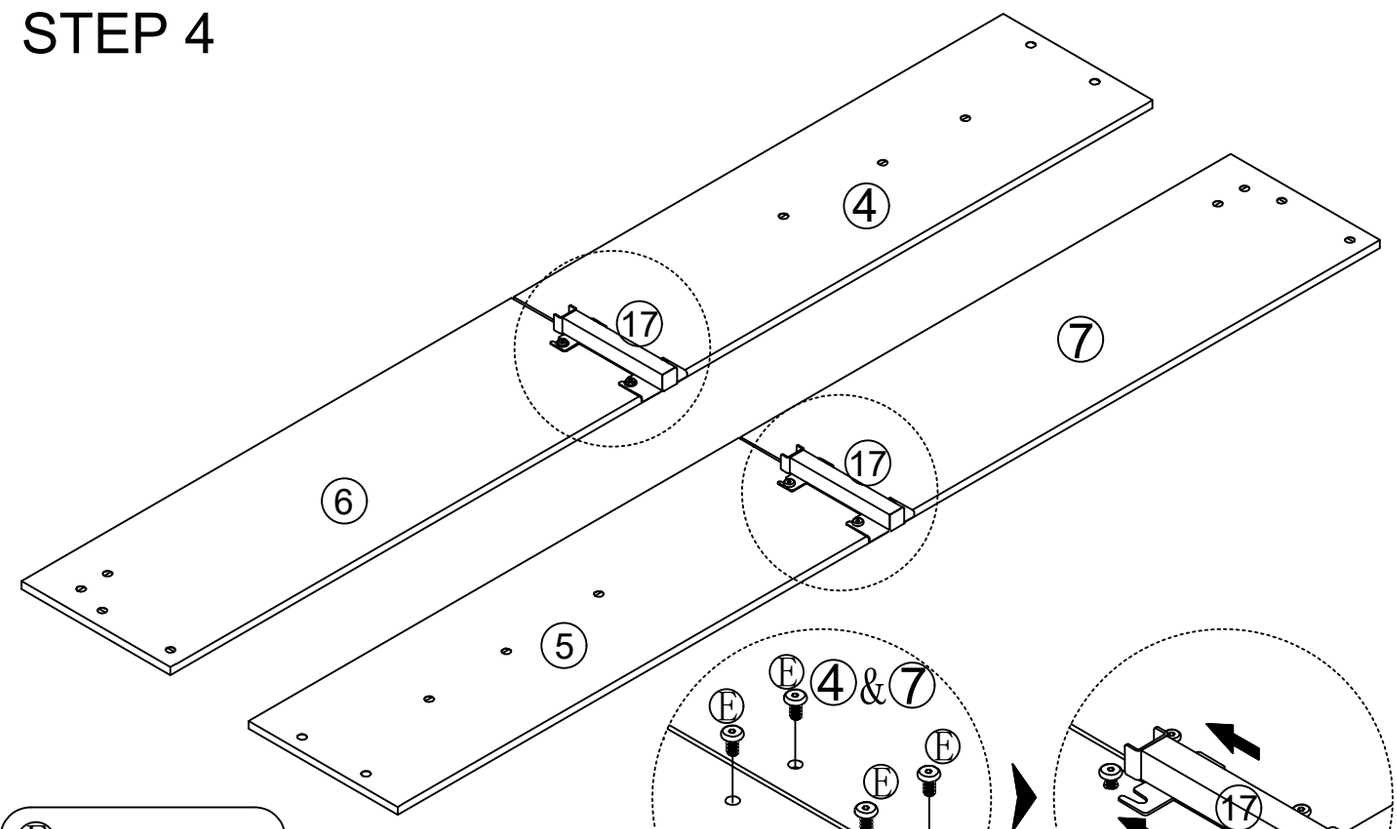

E

5/16"x16mm x 8

STEP 5

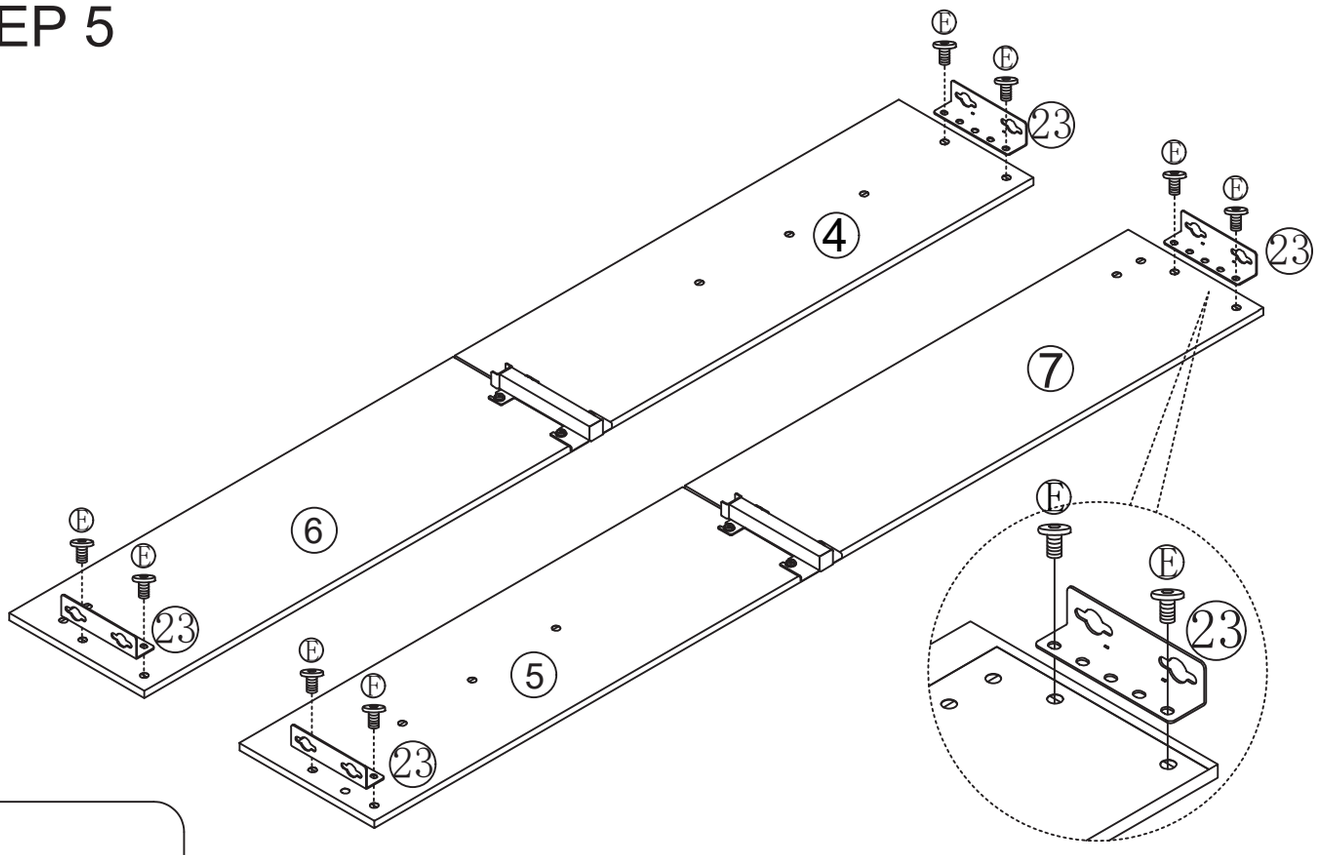

E

5/16"x16mm x 8

STEP 6

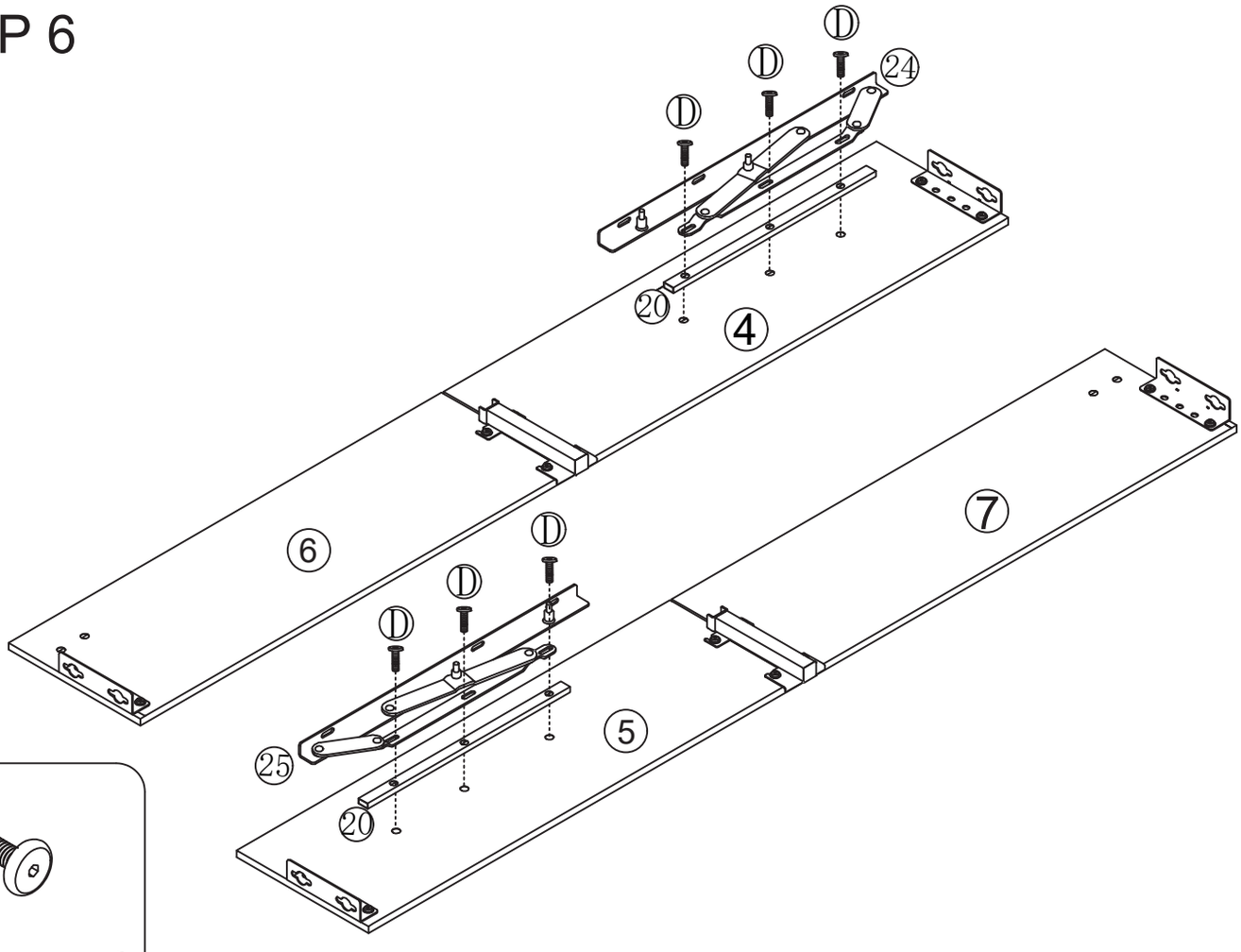

D

5/16"x30mm x 6

STEP 7

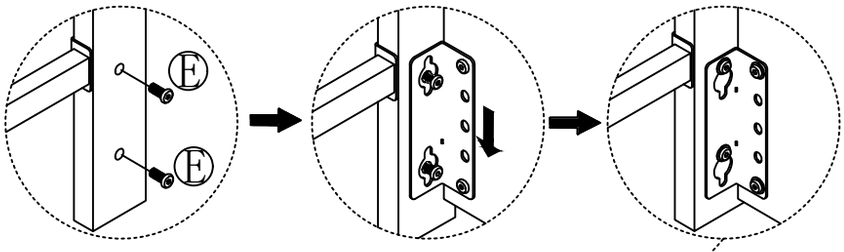

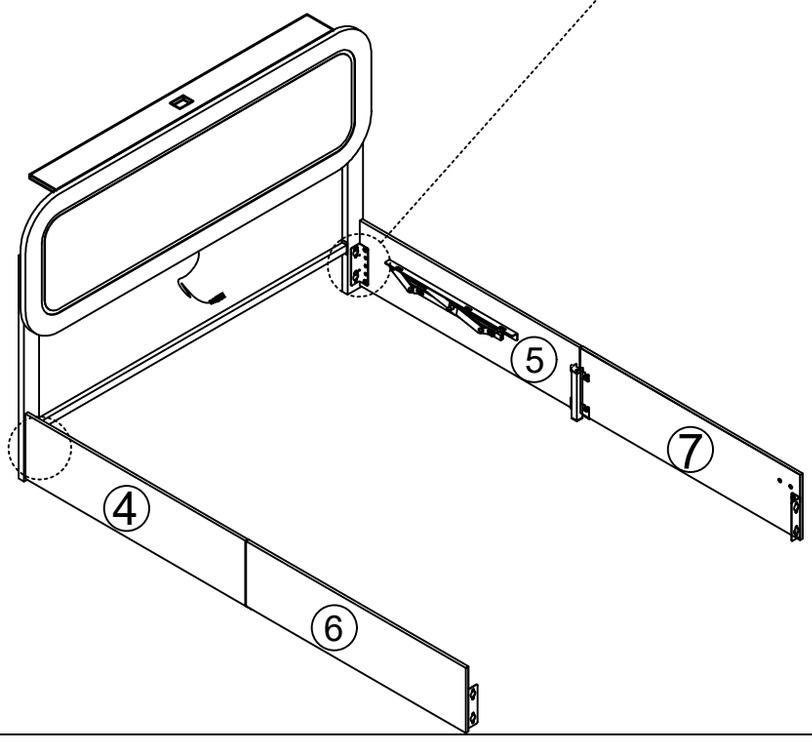

E



5/16"x16mm x 4

STEP 8



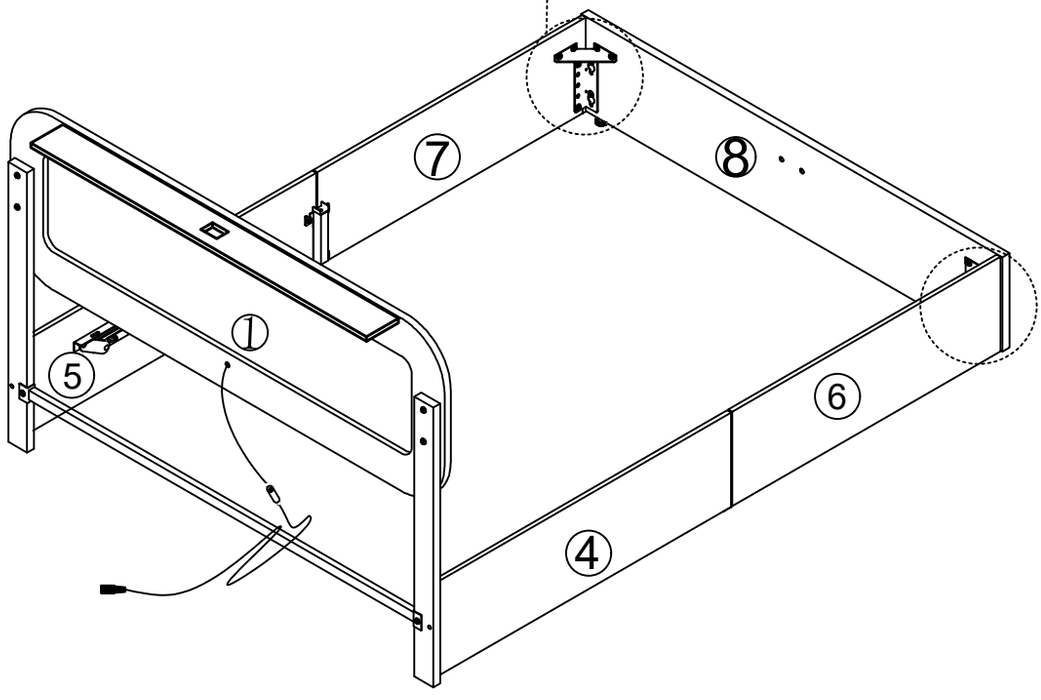

E



5/16"x16mm x 8

STEP 9

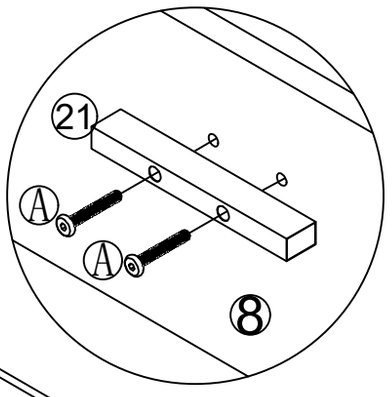

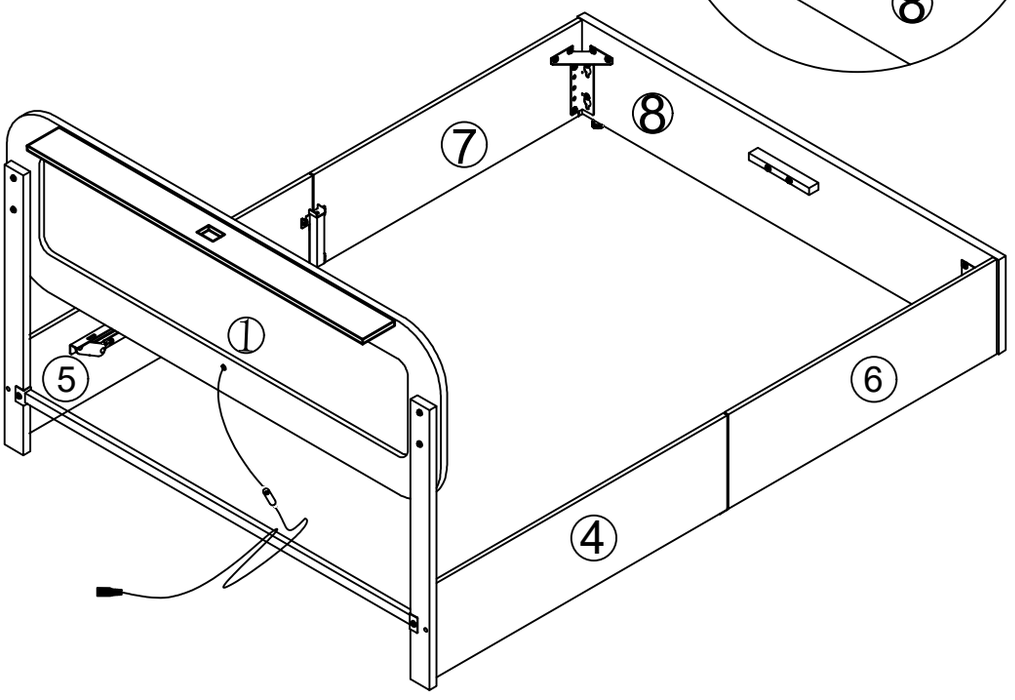

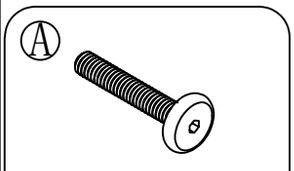

5/16"x55mm x 2

STEP 10

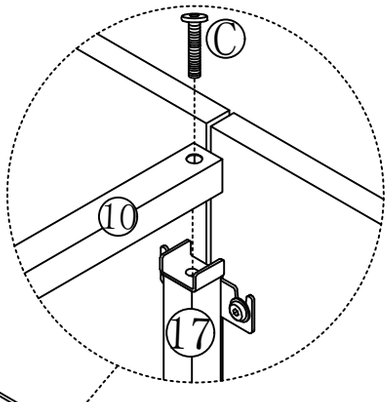

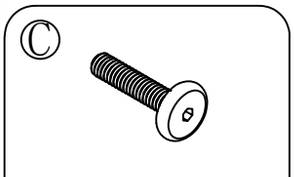

5/16"x40mm x 2

STEP 11

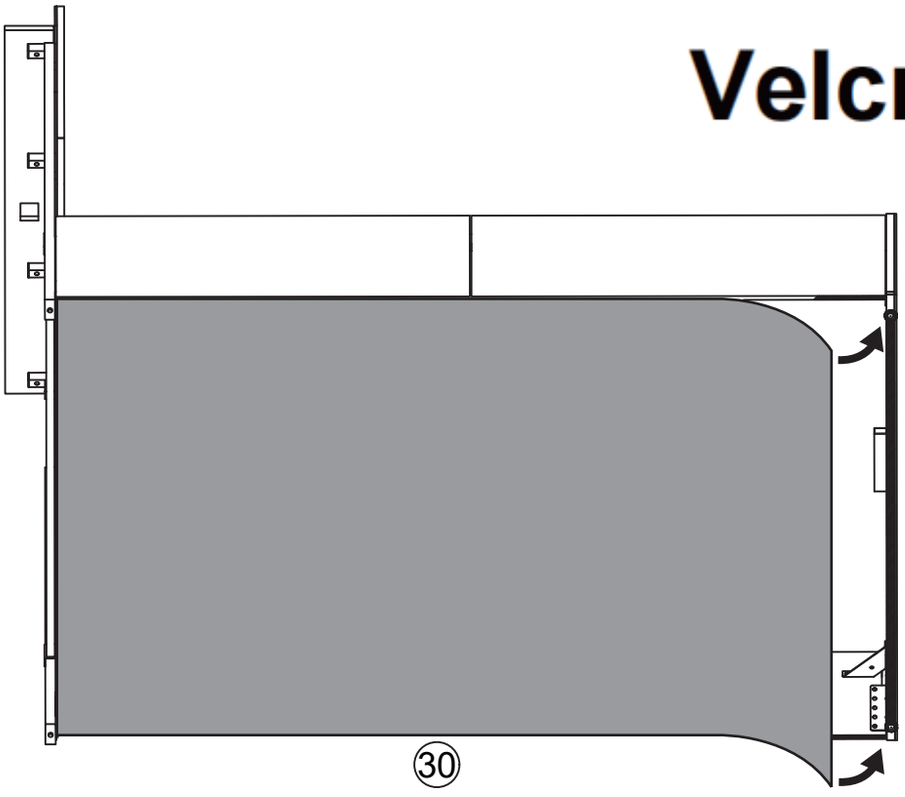

STEP 12

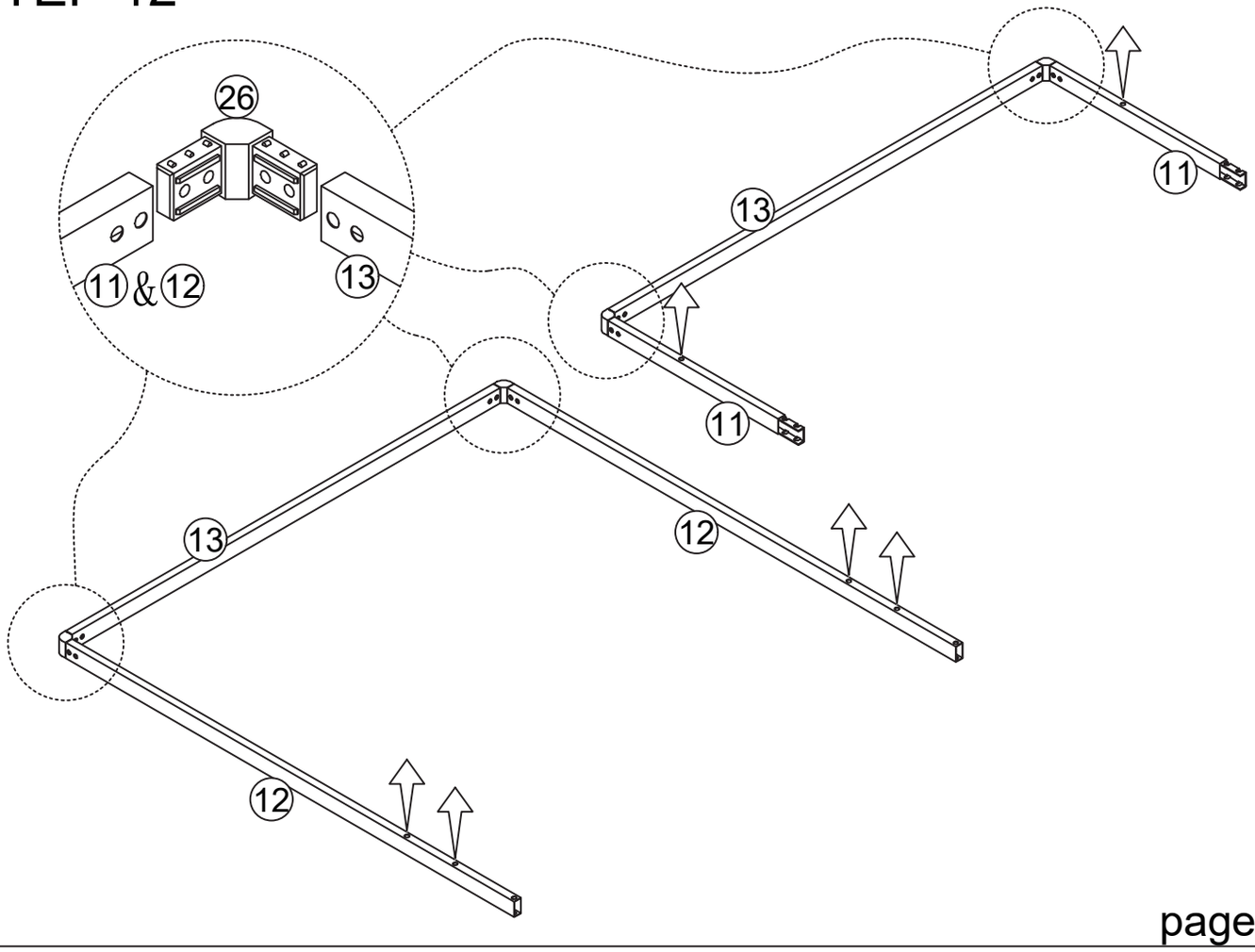

STEP 13

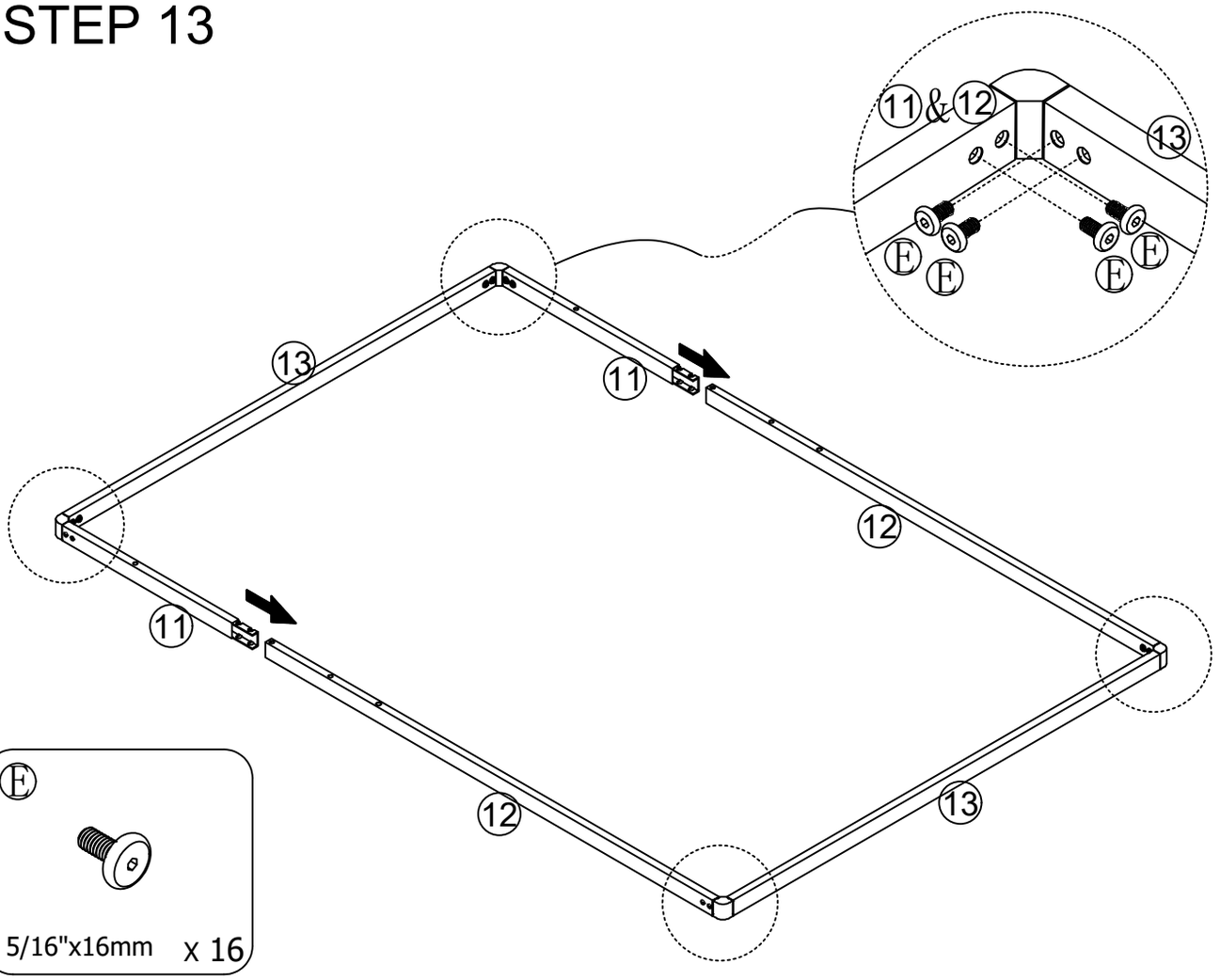

E

5/16"x16mm x 16

STEP 14

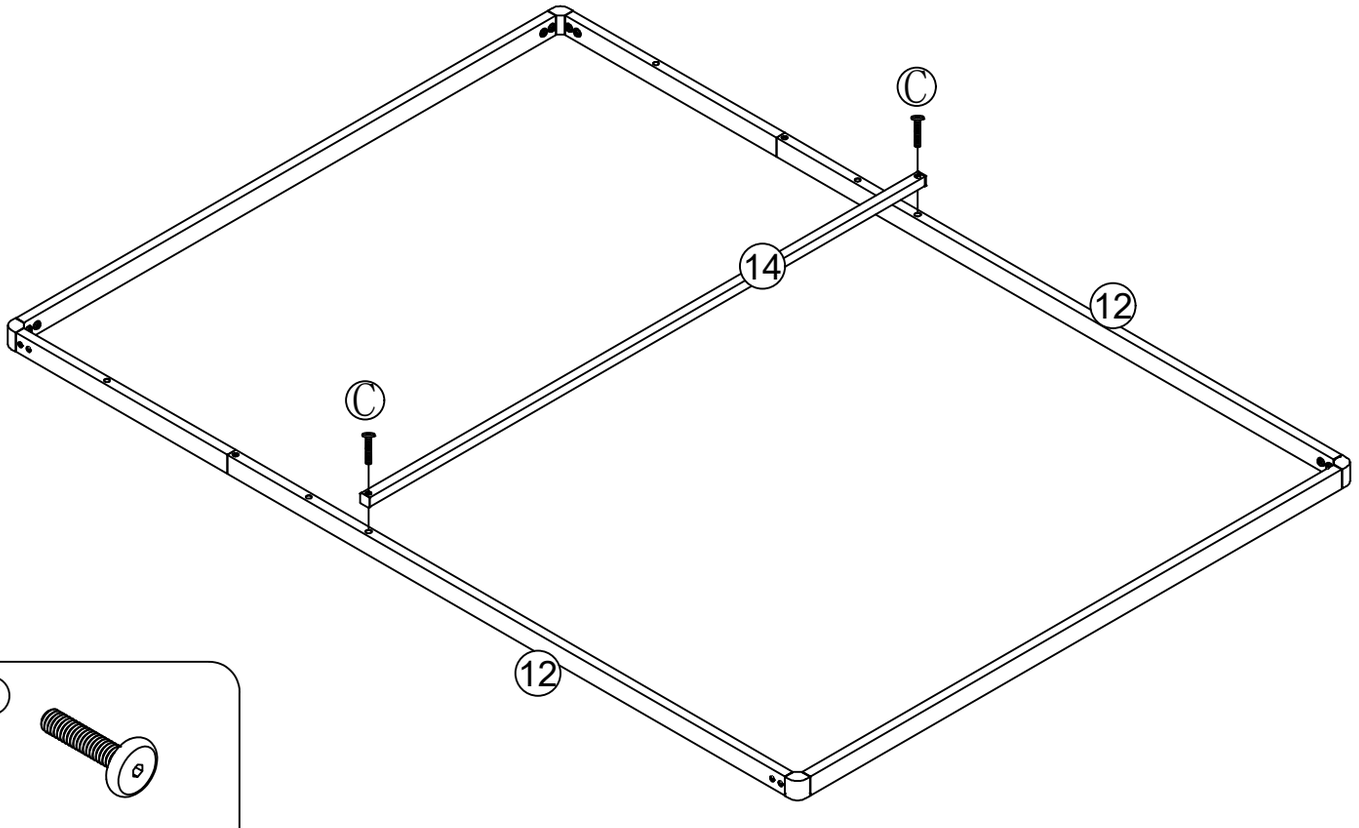

C

5/16"x40mm x2

STEP 15

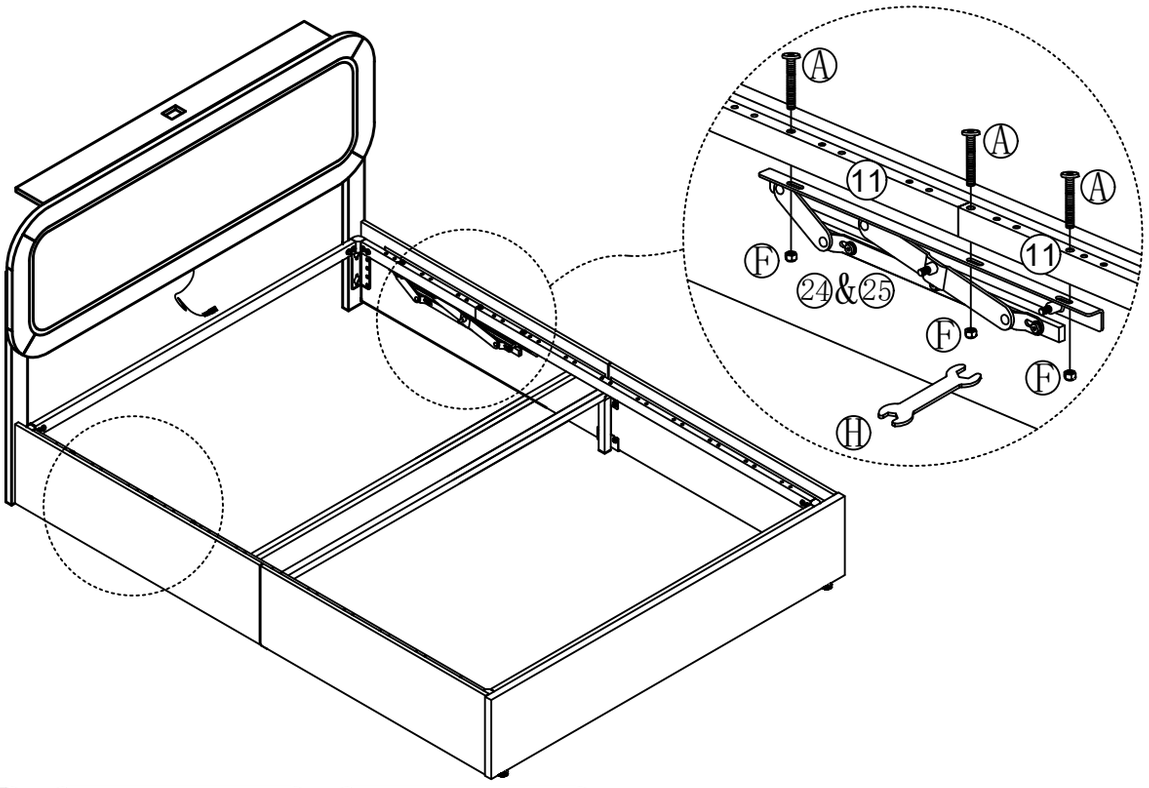

Ⓐ	Ⓕ	Ⓗ
5/16"x55mm x 6	5/16" x 6	x 1

STEP 16

Phillips screwdriver
Not provided.

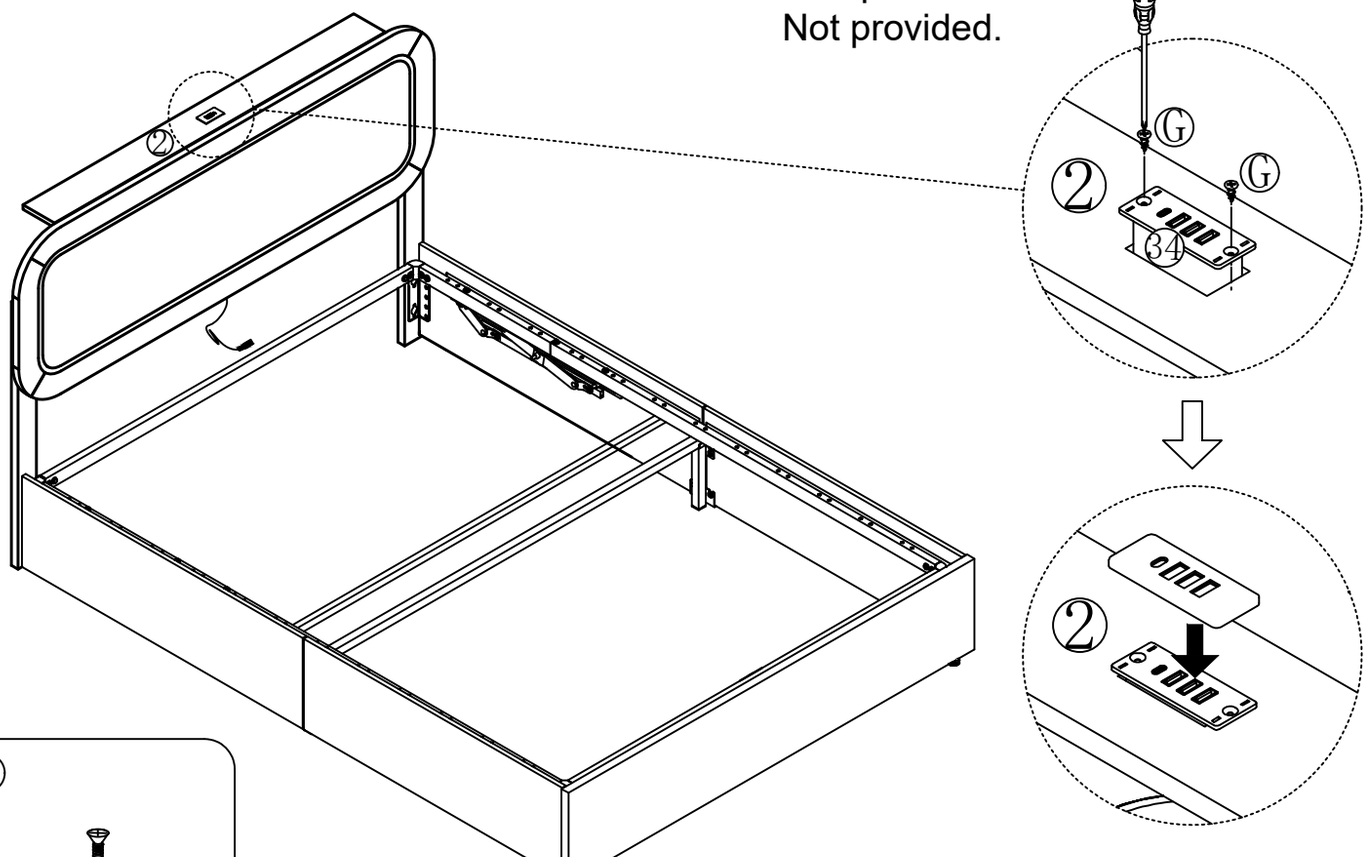

Ⓖ
3 X 12MM x 2

STEP 17

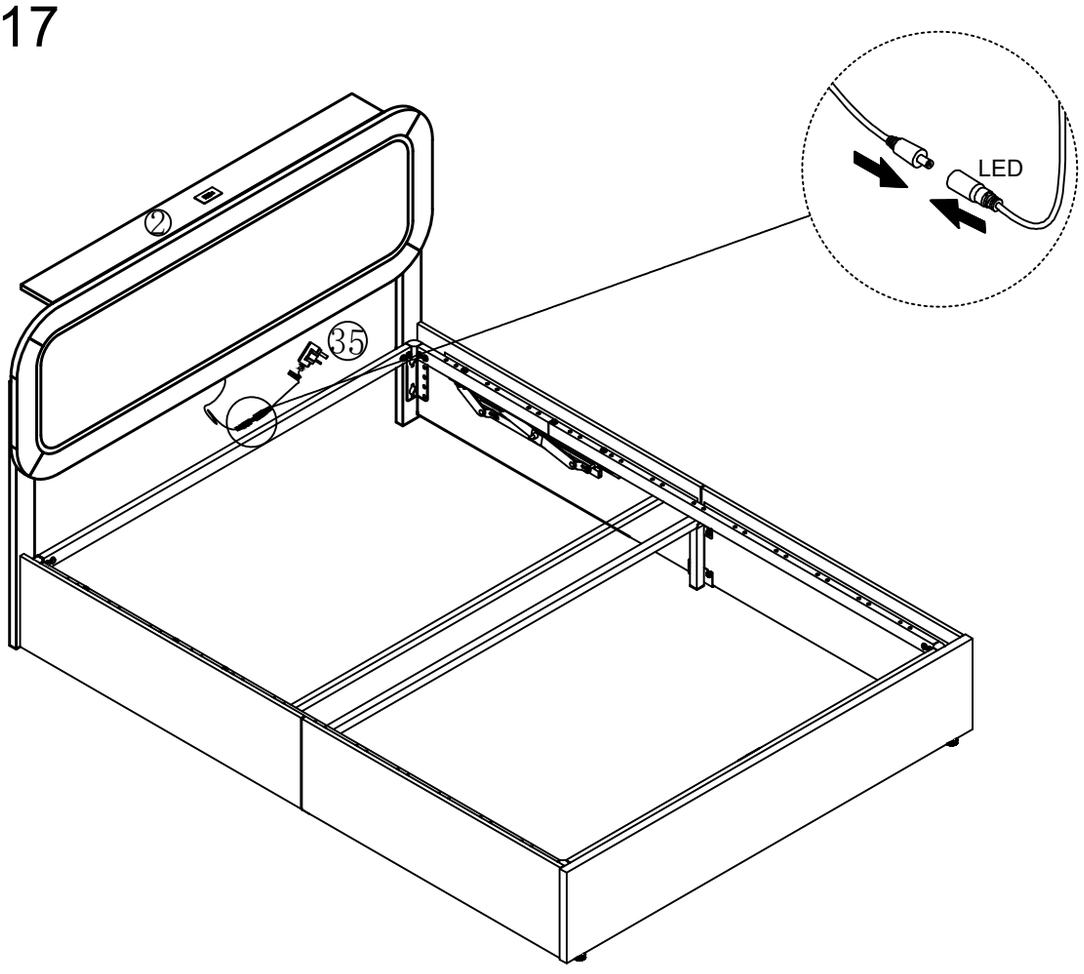

STEP 18

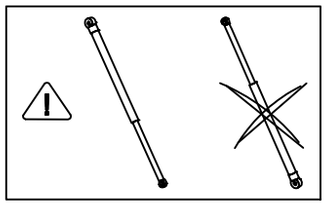

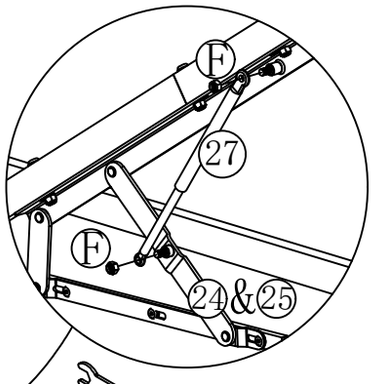

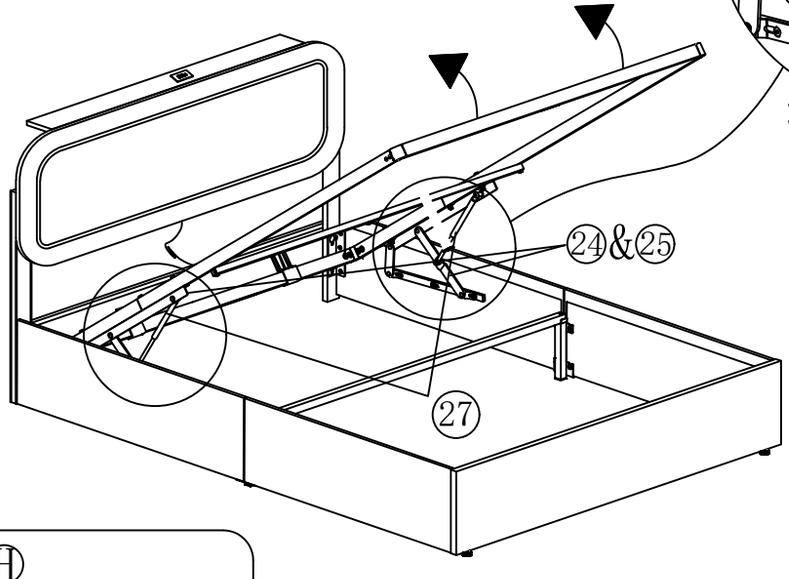



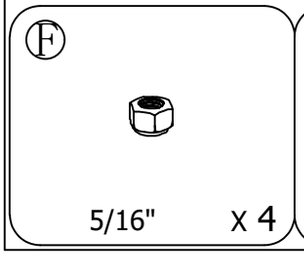

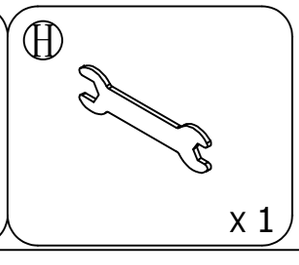

STEP 19

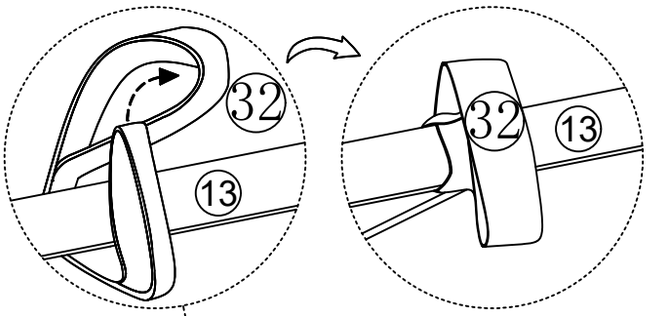

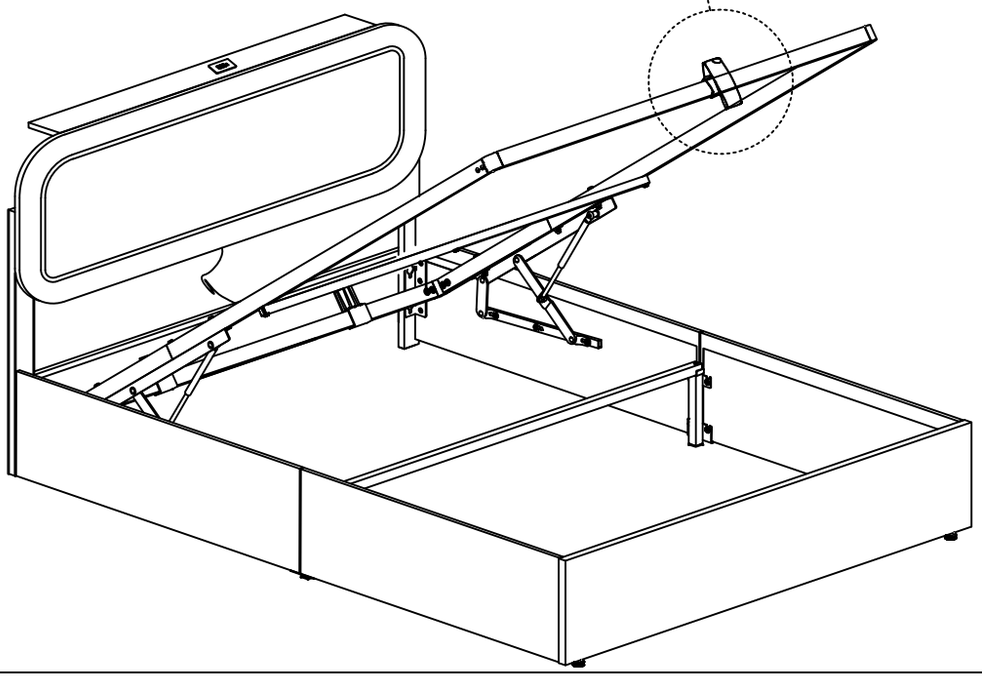

STEP 20

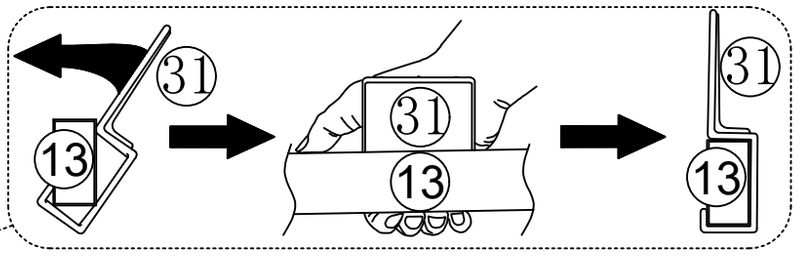

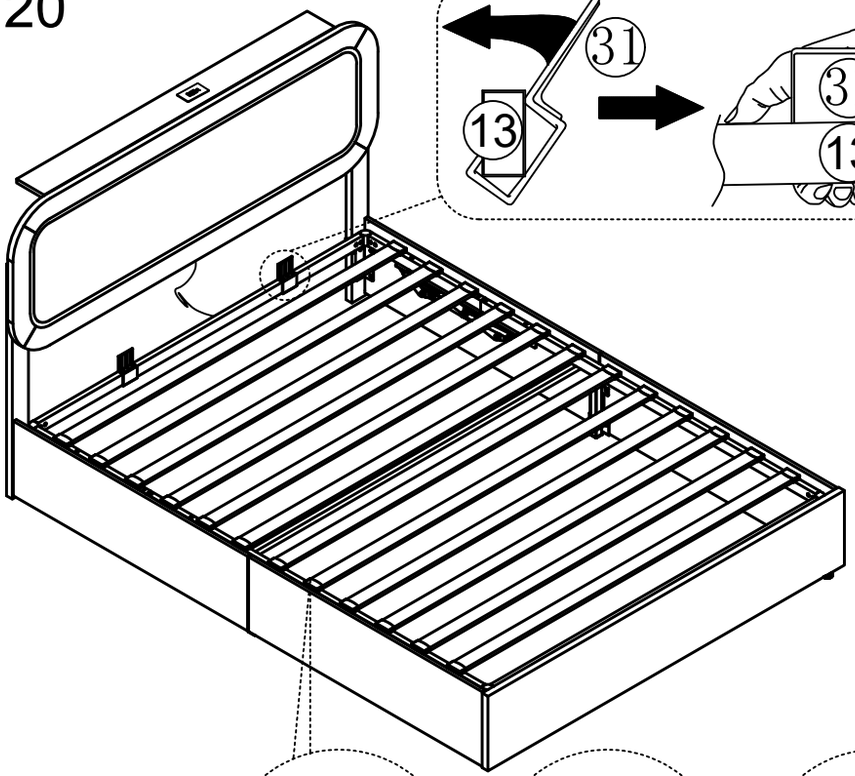

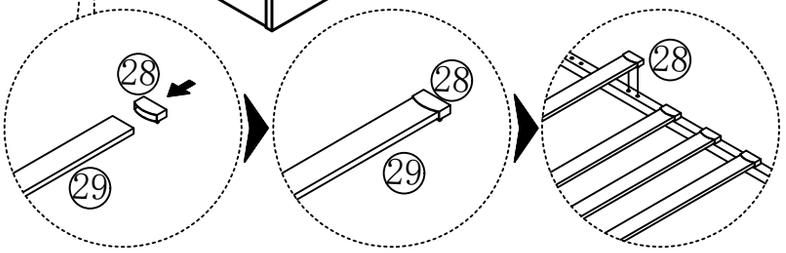

LotusLantern APP Manual

1. Software Overview

1.1 Overview

LotusLantern is a mobile APP to control LED strip by both IOS and Android phones.
The traditional control ways like infrared, 433MHz, 2.4GHz and others old wired ways will be replaced by mobile phone control way with convenient, powerful and scalable features.

Through this mobile APP，you can not only control the color, brightness and color temperature of the LED strips but also set up all kinds of fancy flash mode；Also this APP can change the light of the LED strip according to the rhythm of the music. This APP can set and control several LED strips through Bluetooth and the operation is very simple, easy to learn and easy to use.

1.2 Features

- Adjust color LED strips with 60,000 colors to change color and brightness and adjust monochrome LED strips to change brightness and color temperature
- Play music or turn on a sound playback device, you can let the light change the color and brightness with the rhythm of music, the music rhythm beautiful
- Inside multiple setting mode for color change and control LED strips without mobile
- Long distance control with omni-directional antenna, and many-to-many group control mode
- Once the connection is successful, connect automatically next time

1.3 Performance

LotusLantern APP is easy for use as well as great compatible with all kinds of smart phones; After the actual test of hundreds of mobile phones verification, the compatibility is above 95% of mobile phones in the market. APP is small and convenient, it consumes less system resources, so the requirements of the mobile configuration are low. Control delay is small, the operation feels good, light control is smooth with people's visual sense.

2. Operating Environment

This APP program requires phones of system above Andriod 4.3 and iOS 8.0. Mobile phone configuration is not limited.

3. Instructions

Note: Android version and iOS version download and use the same method, here in the Android version as an example.

3.1 APP Download

Scan the QR code

iOS and Android systems can download the "LotusLantern" APP by scanning the QR code. Open the browser or other tools with "Scan QR code" function, scan the "LotusLantern" QR code as below:

3.2 App Operation

(1) Click on the LotusLantern APP icon, enter the APP page:

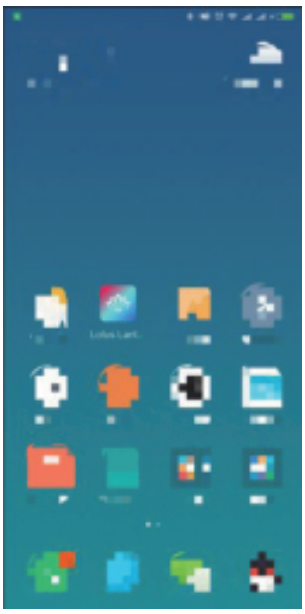

(2) After entering the APP interface, if Bluetooth is not enabled, "an application wants to enable the Bluetooth function of this device." Click [Allow]



(3) switch to color and brightness interface:

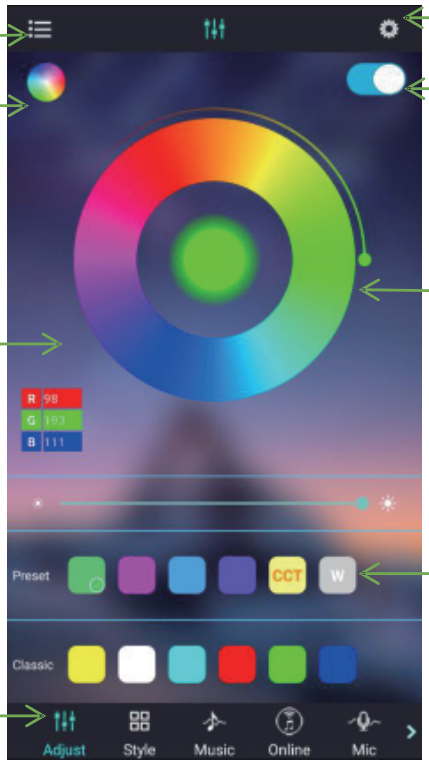

Click to show the lamp list

Switch the color wheel

Display the RGB value
Click to manual adjustment view

Click to shift the interface

Click to display setting view

Lamp switch button

Adjust the color

Click square icon to adjust the color

（4）click to show the lamp list, view lamp list:

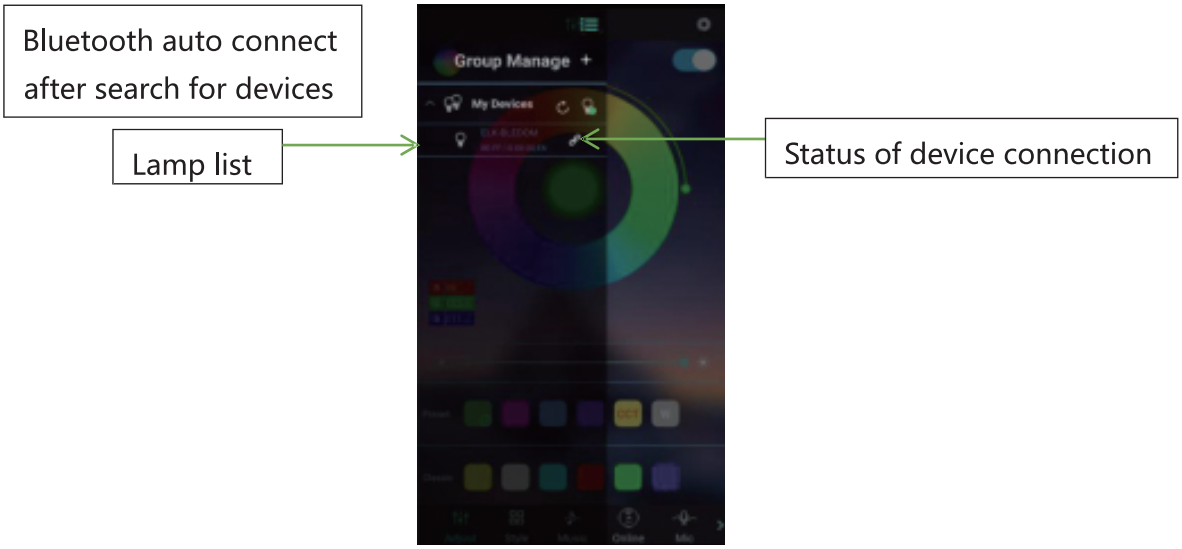

（5）Click to RGB manual adjustment view:

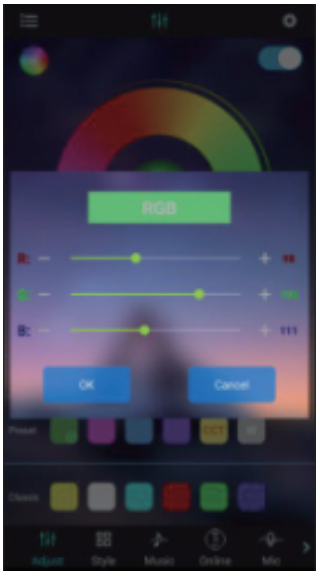

（6）switch to the mode interface:

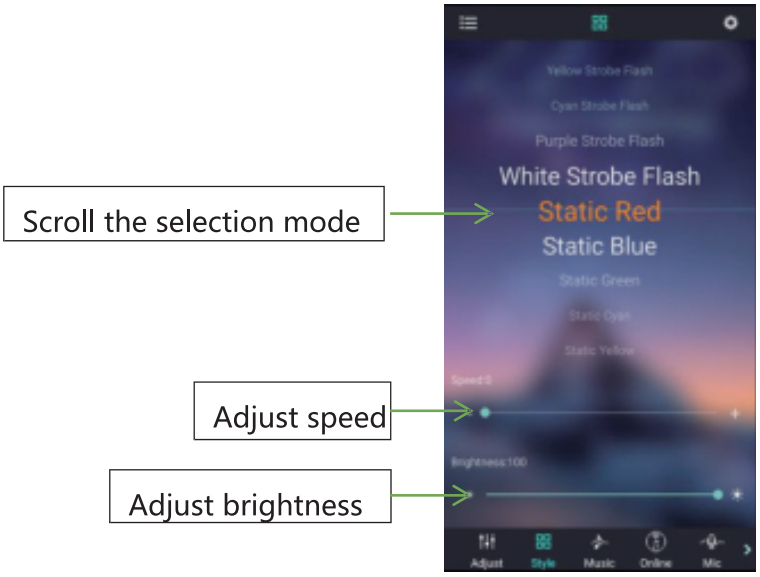

（7）switch to the music rhythm interface:

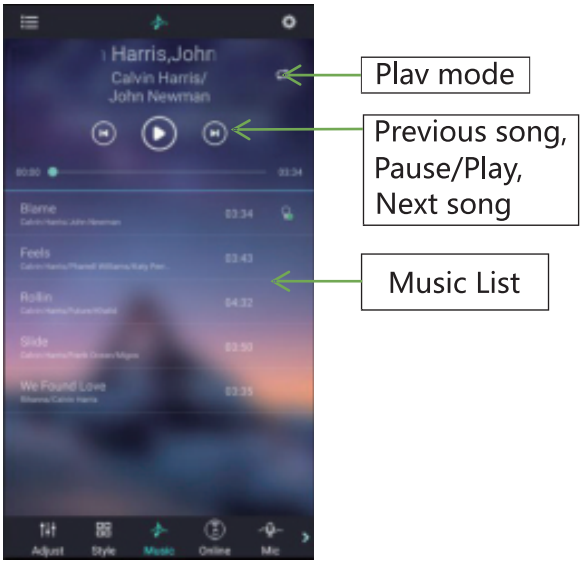

（8）Switch to the online music interface:

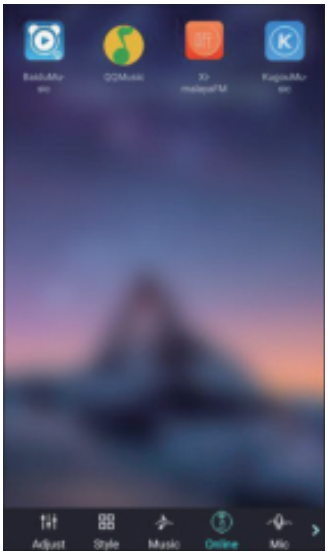

(9) Switch to the microphone rhythm interface:

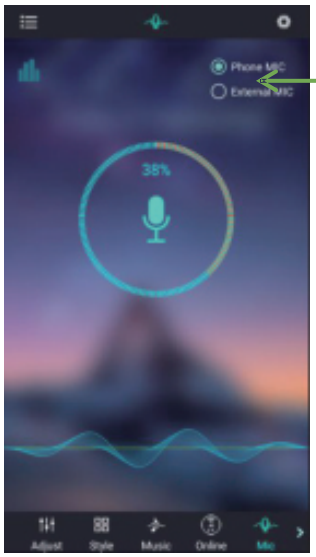

Switch phone microphone and external microphone

Music rhythm through cell phone microphone

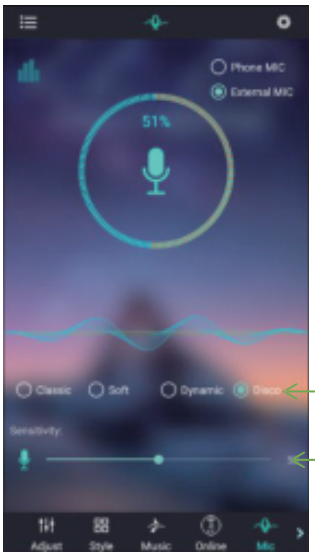

4-style rhythm

Change the sensitivity of MIC to match the sound

Music rhythm through the microphone on the product

(10) Switch to the schedule interface:

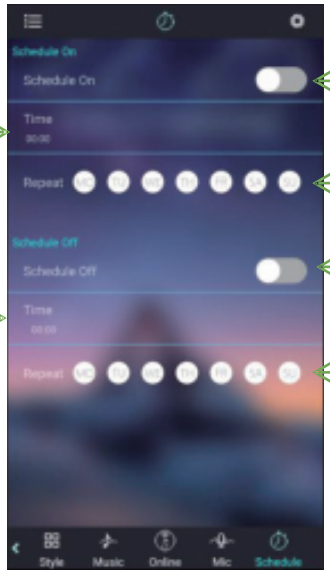

Enable or disable the Light-On function

Set the time of Light-On

Repeat setting
No selection for once Light-On

Enable or disable the Light-Off function

Set the time of Light-Off

Repeat setting
No selection for once Light-Off

(11) Switch to the modify pin sequence interface:

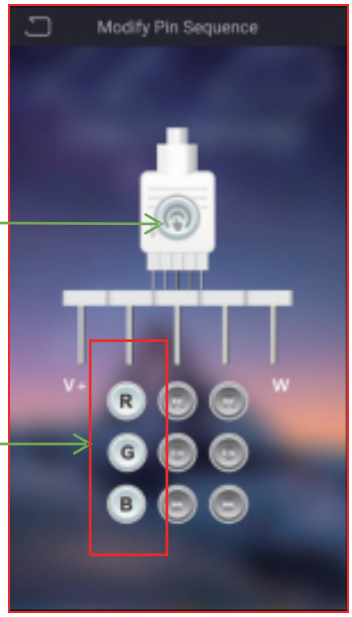

Click to save the new assignment

Change the real color of this line

DECLARATION OF CONFORMITY

1. Product model/product:

CL-5050RGB-30D-5V, CL-5050RGB-30D-12V , CL-5050RGB-60D-5V, CL-5050RGB-60D-12V

2. Name and address of the manufacturer or his authorised representative:

Name: Cononlux Technology Co., Ltd

Address: 1-4F Building A5, A6, Langxin Industrial Park, Langxin Community, Shiyan Street, Bao'an District, Shenzhen China

3. This declaration of conformity is issued under the sole responsibility of the manufacturer.

4. Object of the declaration:

Light Strip Set

CL-5050RGB-60D-5V

Input: 5V

Rate: 50-60 Hz

Power: 10W



5. The object of the declaration described above is in conformity with the relevant Union harmonisation legislation:

UKCA:

Radio Equipment Directive (RED) SI 2017 No.1206;

Restriction of the Use of Certain Hazardous Substances in Electrical and Electronic Equipment Regulations 2019. SI 2012/3032 & SI 2023/658;

6. References to the relevant harmonised standards used or references to the other technical specifications in relation to which conformity is declared:

UKCA:

Radio Equipment Directive (RED) SI 2017 No.1206: BS EN 61000-3-3:2013+A1:2019+A2:2021, BS EN 62479:2010, BS EN IEC 55015:2019+A11:2020, BS EN IEC 61000-3-2:2019+A1:2021+A2:2024, BS EN IEC 61547:2023, BS ETSI EN 300 220-2 V3.3.1 (2025-03), BS ETSI EN 301 489-1 V2.2.3 (2019-11), BS ETSI EN 301 489-3 V2.3.2 (2023-01)

Restriction of the Use of Certain Hazardous Substances in Electrical and Electronic Equipment Regulations 2019. SI 2012/3032 & SI 2023/658: BS IEC 62321-3-1:2013; BS IEC 62321-4:2013+AMD1:2017; BS IEC 62321-5:2013;IEC 62321-7-1:2015; BS IEC 62321-7-2:2017; BS IEC 62321-6:2015; BS IEC 62321-8:2017;

7. Additional information: Risk of electric shock. Do not open. For indoor use only.

Signed for and on behalf of: Cononlux Technology Co., Ltd

(place and date of issue): Shenzhen, China 2026.8.5

(name, function) (signature): Yang Yang

扫描全能王 3亿人都在用的扫描App

DECLARATION OF CONFORMITY

1. Product model/product: LZ-GP1202000UKDP

2. Name and address of the manufacturer or his authorised representative:

Name：Shenzhen lizhi Technology Co.,Ltd

Address：Block B, Liyuan Industrial Park Shiyan Town, Baoan District, Shenzhen 518000 Guangdong P.R. China

3. This declaration of conformity is issued under the sole responsibility of the manufacturer.

4. Object of the declaration:

LED Driver

LZ-GP1202000UKDP

Input: 200-240V

Output: 12V



5. The object of the declaration described above is in conformity with the relevant Union harmonisation legislation:

UKCA:

Electrical Equipment (Safety) Regulations 2016 (SI 2016 No. 1101)； ;

Electromagnetic Compatibility Regulations 2016 (SI 2016 No. 1091);

Restriction of the Use of Certain Hazardous Substances in Electrical and Electronic Equipment Regulations 2019. SI 2012/3032 & SI 2023/658;

6. References to the relevant harmonised standards used or references to the other technical specifications in relation to which conformity is declared:

UKCA:

Electrical Equipment (Safety) Regulations 2016 (SI 2016 No. 1101)： BS EN 61347-1:2015+A1:2021, BS EN 61347-1:2015, BS EN 61347-2-13:2014+A1:2017, BS EN 61347-2-13:2014, BS EN 62493: 2015+A1:2022

Electromagnetic Compatibility Regulations 2016 (SI 2016 No. 1091): BS EN IEC 55015:2019+A11, BS EN IEC 61547:2023, BS EN IEC 61000-3-2:2019+A2, BS EN 61000-3-3:2013+A2

Restriction of the Use of Certain Hazardous Substances in Electrical and Electronic Equipment Regulations 2019: BS IEC 62321-3-1:2013; BS IEC 62321-4:2013+AMD1:2017; BS IEC 62321-5:2013; BS IEC 62321-7-1:2015; BS IEC 62321-7-2:2017; BS IEC 62321-6:2015; BS IEC 62321-8:2017;

7. Additional information: Risk of electric shock. Do not open. For indoor use only.

Signed for and on behalf of: Shenzhen lizhi Technology Co.,Ltd

(place and date of issue): Shenzhen, China 2026.8.4

(name, function) (signature):

DECLARATION OF CONFORMITY

1. Product model/product: BY213-TD04-C

2. Name and address of the manufacturer or his authorised representative:

Name: Dongguan baiyou Electronic Co., LTD

Address: 2 F A Building WuFeng Industrial JinTan Road ShiJie TownDongGuan City, GuangDong 523295

3. This declaration of conformity is issued under the sole responsibility of the manufacturer.

4. Object of the declaration:

USB Hub

BY213-TD04-C

Input: 100-240V 50/60HZ 0.5A

Output: 5V 2.4A 12W



5. The object of the declaration described above is in conformity with the relevant Union harmonisation legislation:

UKCA:

Electrical Equipment (Safety) Regulations 2016 (SI 2016 No. 1101);

Electromagnetic Compatibility Regulations 2016 (SI 2016 No. 1091);

Restriction of the Use of Certain Hazardous Substances in Electrical and Electronic Equipment Regulations 2019. SI 2012/3032 & SI 2023/658;

6. References to the relevant harmonised standards used or references to the other technical specifications in relation to which conformity is declared:

UKCA:

Electrical Equipment (Safety) Regulations 2016 (SI 2016 No. 1101): BS EN 62368-1:2013, BS EN IEC 62368-1:2024+A11 :2024

Electromagnetic Compatibility Regulations 2016 (SI 2016 No. 1091): BS EN 55032:2015+A11+A1; BS EN IEC 61000-3-2:2019+A1+A2; BS EN 61000-3-3:2013+A1+A2; BS EN 55035:2017+A11

Restriction of the Use of Certain Hazardous Substances in Electrical and Electronic Equipment Regulations 2019. SI 2012/3032 & SI 2023/658: BS IEC 62321-3-1:2013; BS IEC 62321-4:2013+AMD1:2017; BS IEC 62321-5:2013;IEC 62321-7-1:2015; BS IEC 62321-7-2:2017; BS IEC 62321-6:2015; BS IEC 62321-8:2017;

7. Additional information: Risk of electric shock. Do not open. For indoor use only.

Signed for and on behalf of: Dongguan baiyou Electronic Co., LTD

(place and date of issue): Dongguan, China 2026.8.4

(name, function) (signature):