TEAR SHEET

Daniela 9.5" Cordless Table Lamp

Item # RL 3065CG-SP-CL



Designer: Ralph Lauren

Height: 9.5"

Width: 6.5"

Base: 2.25" Round

Finishes: CG

Shade Treatments: SP

Shade Details: 3.25" x 6.5" x 5.25"

Lightsource: Rechargeable LED w/ Touch Dimmer

Wattage: 1.7w (60 - 250lm)

Weight: 6 Pounds

Note: Rechargeable LED Lightsource and Charging Cable Included | Cannot be Placed in Direct Sunlight

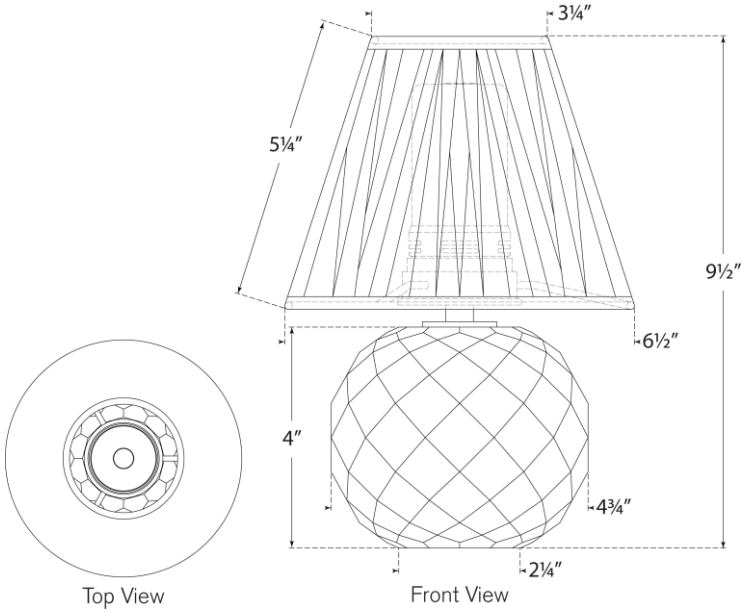

VISUAL COMFORT & CO.

DAMP LED