

!WOODEN MATERIALS ! NO ELECTRIC DRILL!

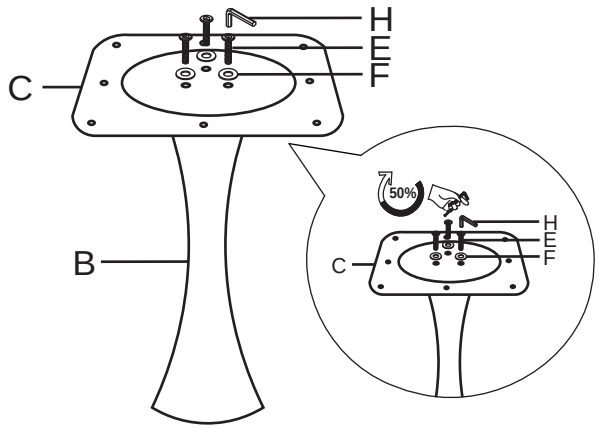

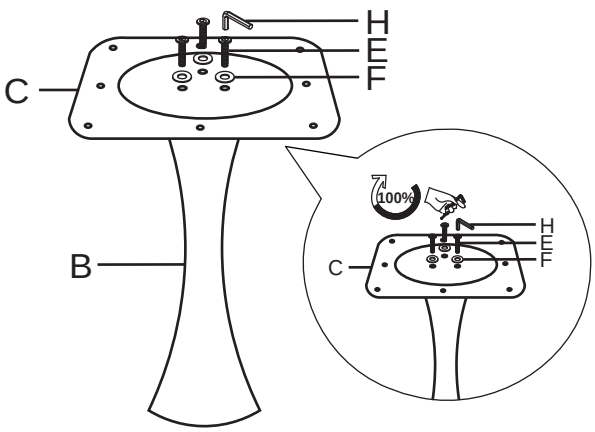

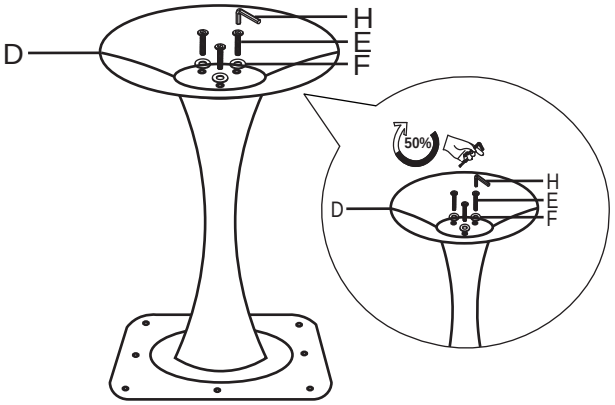

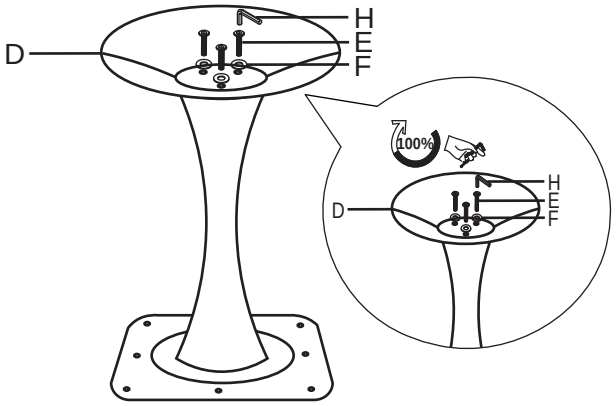

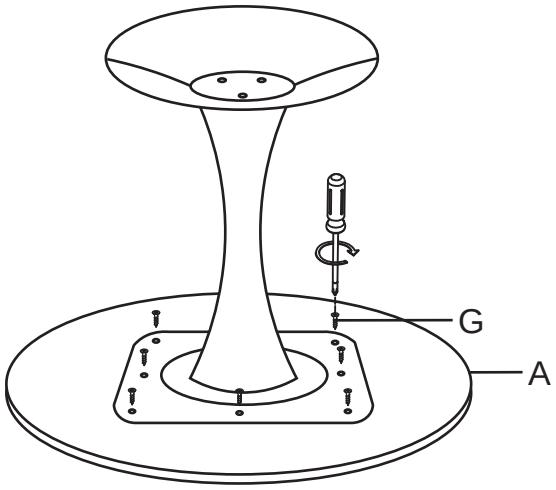



A	B	C	D	E	F	G	H
				 M8*30	 M8*18	 M4*14	M5
1	1	1	1	6	6	8	1