Assembly Instructions

Caution : You must read this before you proceed

Care & Maintenance



- Not for commercial use. For residential use only.



- Furniture may scratch floors. We recommend using furniture pads to protect your floors.



- Do not put hot items directly on furniture surface.



- Do not clean furniture with harsh cleansers or polish.



- Do not place furniture under direct sunlight.



- Do not place furniture near heating or cooling vents.



- Do not write on furniture without a padded barrier to protect the surface.



- Do not place furniture outside . For indoor use only.



- Stains may be removed with mild soap solution and damp cloth.



- Children should not climb or jump on the furniture.



- Dust and pick-up spills using a clean, non-colored, lint-free cloth.

Please look in boxes for hardware packs.
Sets often ship in multiple boxes and may arrive a day or two apart.

Fireplace Accessories

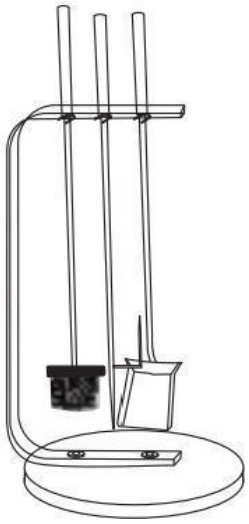

Parts List

Label	Picture	Description	QTY
A		Stand	1
B		Base	1
C		Broom	1
D		Fork	1
E		Dustpan	1
F		Handle	3

Hardware

Label	Picture	Description	QTY
①		Bolt(M6*25)	3
②		Nut	3
③		Bolt(M8*30)	1
④		Wrench	1

Assembly Preparation

Before Beginning Assembly:

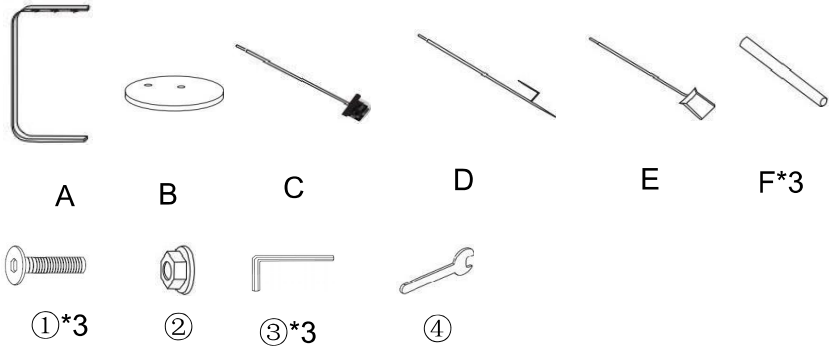

- Read instructions, cover to cover-
- Have 2 adults on hand for assembly-
- Do not assemble on flooring or carpet-
- Assemble on a clean non-marring surface (packing foam)-
- Save all packaging until finished-

Assembly Steps

Overview

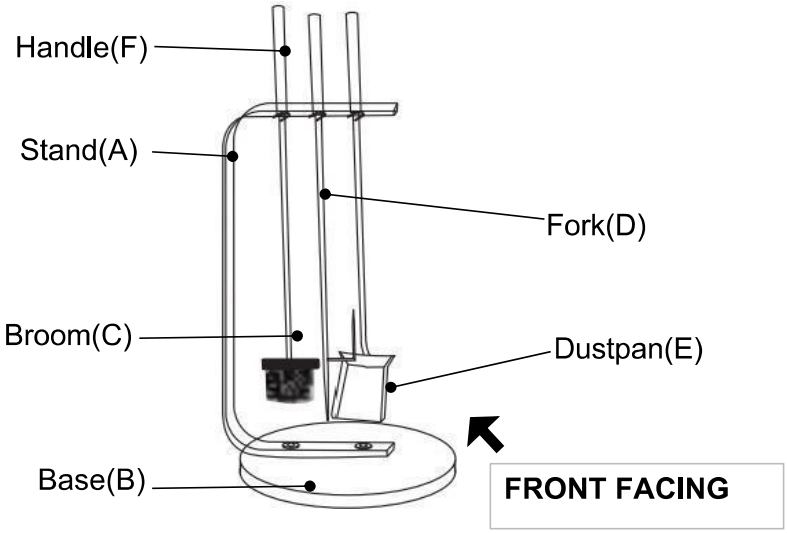

This Fireplace Accessories has multiple parts and may require up to 10 minutes to assemble. To give you an overview of the Fireplace Screen parts,the above picture is to help you put the various parts into perspective.Please read through the instructions below to familiarise yourselve with the parts and steps before assmebly.

Step 1

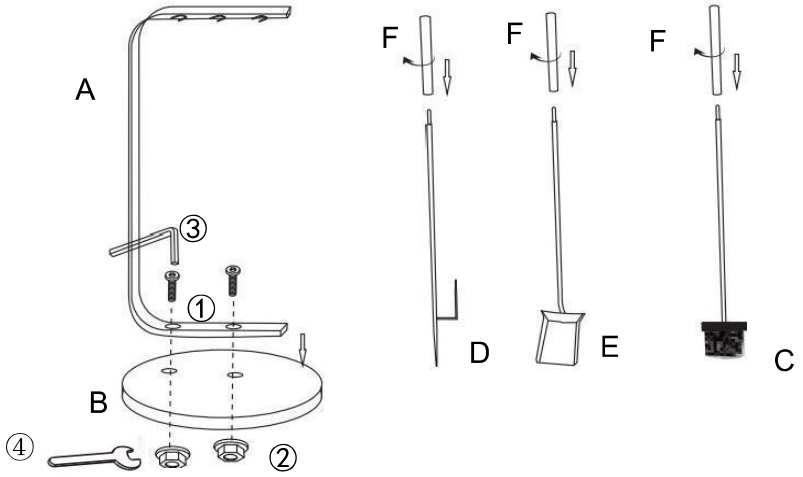

Open the carton, and placed all the part on a clean and non-marring surface.
First Attach the Stand(A) to the Base(B). Using Bolt(①), Nut(②) with Allen Wrench(③) and Wrench(④) to tighten it.
Then Align Handle(F) with the Broom(C) and snap into place.
Align Handle(F) with the Fork(D) and snap into place.
Align Handle(F) with the Dustpan(E) and snap into place.

Fully tighten all the bolts.

Step 2

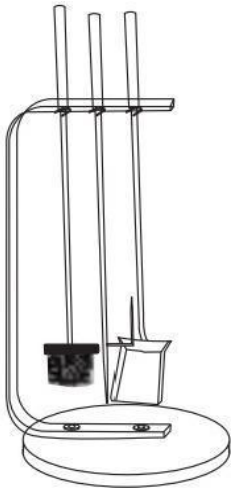

Your Fireplace Accessories is ready for use.
This Fireplace Accessories can only be used on a flat, leveler surface.

Fireplace Accessories

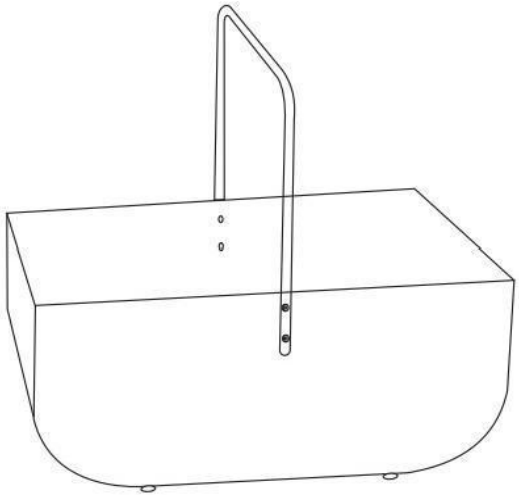

Parts List

Label	Picture	Description	QTY
A		Handle	1
B	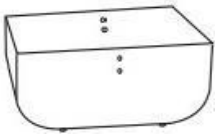	Basket	1

Hardware

Label	Picture	Description	QTY
①	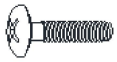	Bolt(M6*20)	5
②		Allen Wrench	1
③		Cap	5
④		Wrench	1

Assembly Preparation

Before Beginning Assembly:



A

B



①*5



②



③*5



④

- Read instructions, cover to cover-
- Have 2 adults on hand for assembly-
- Do not assemble on flooring or carpet-
- Assemble on a clean non-marring surface (packing foam)-
- Save all packaging until finished-

Assembly Steps

Overview

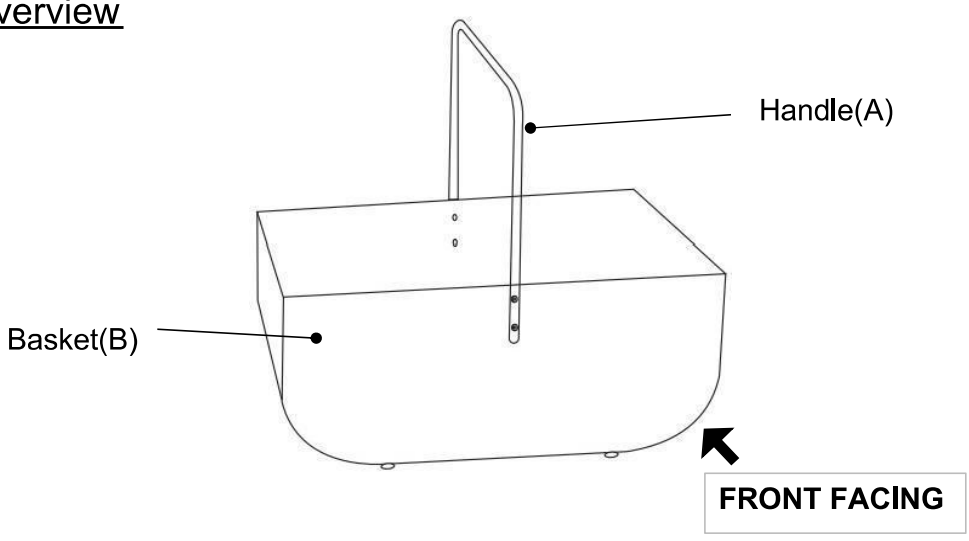

This Fireplace Accessories has multiple parts and may require up to 10 minutes to assemble. To give you an overview of the Fireplace Screen parts,the above picture is to help you put the various parts into perspective.Please read through the instructions below to familiarise yourselve with the parts and steps before assmebly.

Step 1

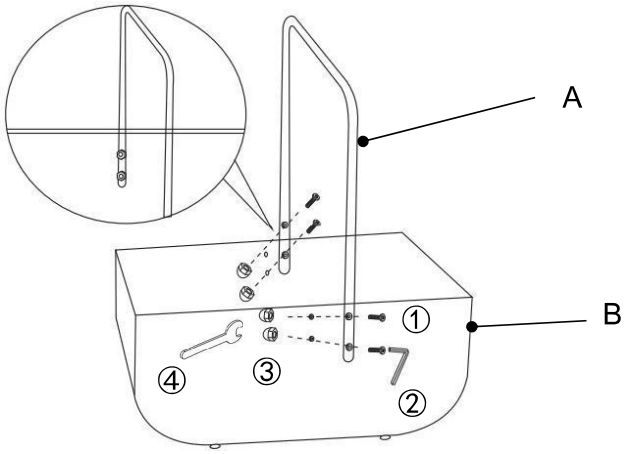

Attach the Handle(A) to the Basket(B). Using Bolt(①, Cap(③) with Allen Wrench(②) and Wrench(④) to tighten it.

Fully tighten all the bolts.

Step 2

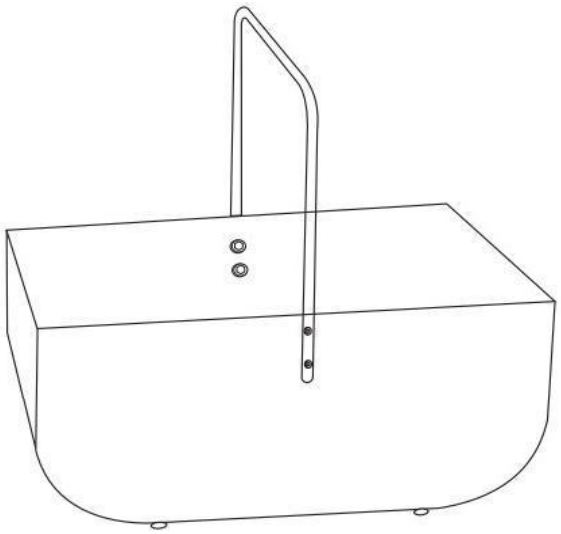

Your Fireplace Accessories is ready for use.
This Fireplace Accessories can only be used on a flat, leveler surface.

Fireplace Accessories

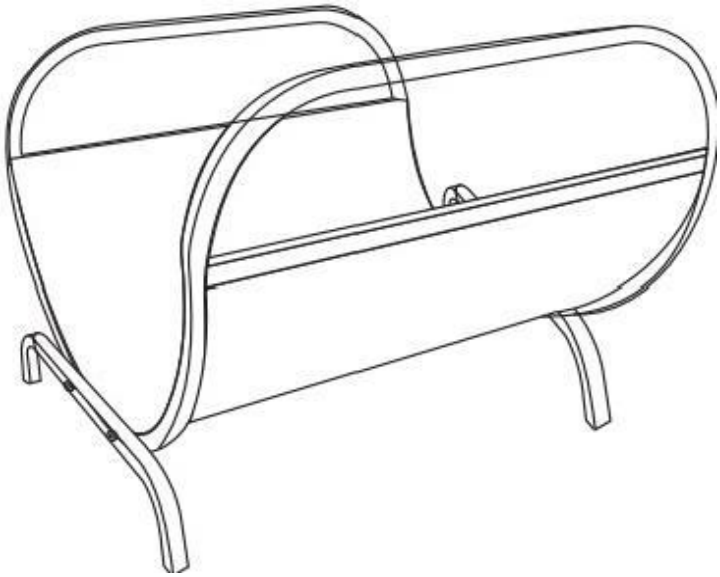

Parts List

Label	Picture	Description	QTY
A	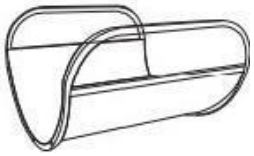	Body	1
B		Leg	2

Hardware

Label	Picture	Description	QTY
①		Bolt(M6*20)	5
②		Allen Wrench	1
③		Nut	5
④		Wrench	1

Assembly Preparation

Before Beginning Assembly:

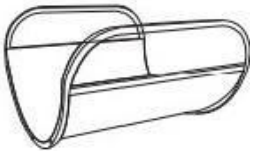

A



B*2



①*5



②



③*5



④

- Read instructions, cover to cover-
- Have 2 adults on hand for assembly-
- Do not assemble on flooring or carpet-
- Assemble on a clean non-marring surface (packing foam)-
- Save all packaging until finished-

Assembly Steps

Overview

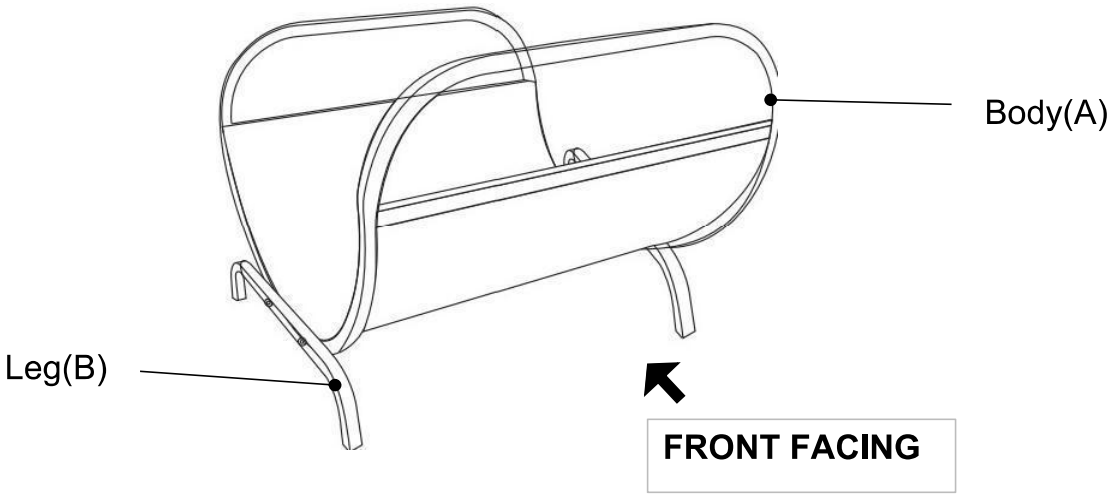

This Fireplace Accessories has multiple parts and may require up to 10 minutes to assemble To give you an overview of the Fireplace Screen parts,the above picture is to help you put the various parts into perspective.Please read through the instructions below to familiarise yourselve with the parts and steps before assmebly.

Step 1

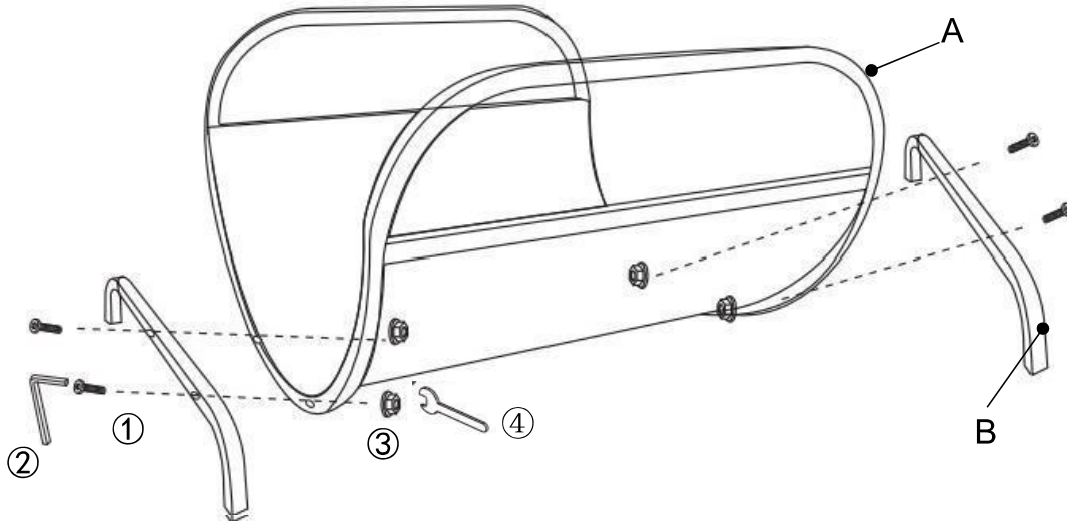

Attach the Body(A) to the Leg(B). Using Bolt(①) ,Nut(③) with Allen Wrench(②) and Wrench(④) to tighten it.

Fully tighten all the bolts.

Step 2

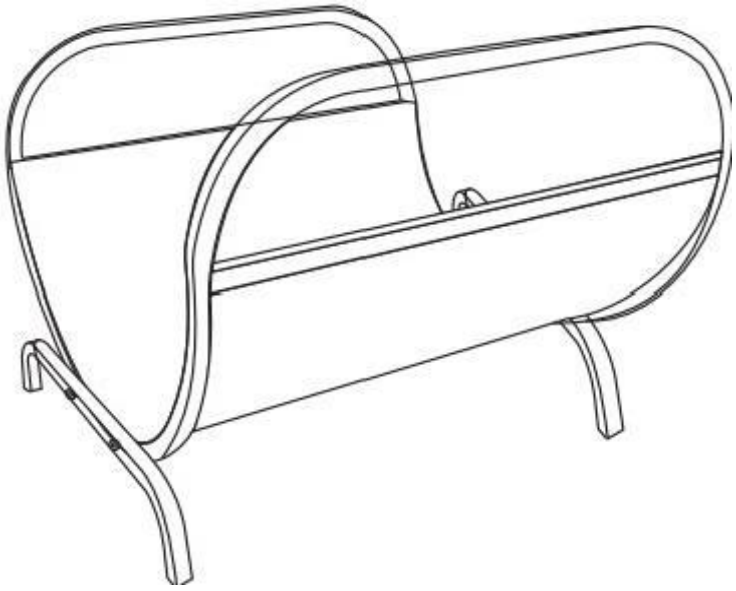

Your Fireplace Accessories is ready for use.
This Fireplace Accessories can only be used on a flat, leveler surface.

Questions & Answers about Proposition 65

• What is Proposition 65?

Proposition 65 requires businesses to provide warnings to Californians about significant exposures to chemicals that cause cancer, birth defects or other reproductive harm. These chemicals can be in the products that Californians purchase, in their homes or workplaces, or that are released into the environment. By requiring that this information be provided, Proposition 65 enables Californians to make informed decisions about their exposures to these chemicals.

Proposition 65 also prohibits California businesses from knowingly discharging significant amounts of listed chemicals into sources of drinking water.

Proposition 65 requires California to publish a list of chemicals known to cause cancer, birth defects or other reproductive harm. This list, which must be updated at least once a year, has grown to include approximately 900 chemicals since it was first published in 1987.

• What types of chemicals are on the Proposition 65 list?

The list contains a wide range of naturally occurring and synthetic chemicals that include additives or ingredients in pesticides, common household products, food, drugs, dyes, or solvents. Listed chemicals may also be used in manufacturing and construction, or they may be byproducts of chemical processes, such as motor vehicle exhaust.

• What does a warning mean?

If a warning is placed on a product label or posted or distributed at a workplace, a business, or in rental housing, the business issuing the warning is aware or believes that it is exposing individuals to one or more listed chemicals.

By law, a warning must be given for listed chemicals unless the exposure is low enough to pose no significant risk of cancer or is significantly below levels observed to cause birth defects or other reproductive harm.

• Where can I get more information on Proposition 65?

If you have specific questions on the administration or implementation of Proposition 65, you can contact OEHHA's Proposition 65 program at P65.Questions@oehha.ca.gov, or by phone at (916) 445-6900.