MULTI-FUNCTION 4+1 BURNER GAS BBQ OPERATION MANUAL

Model #: V01GQ014S

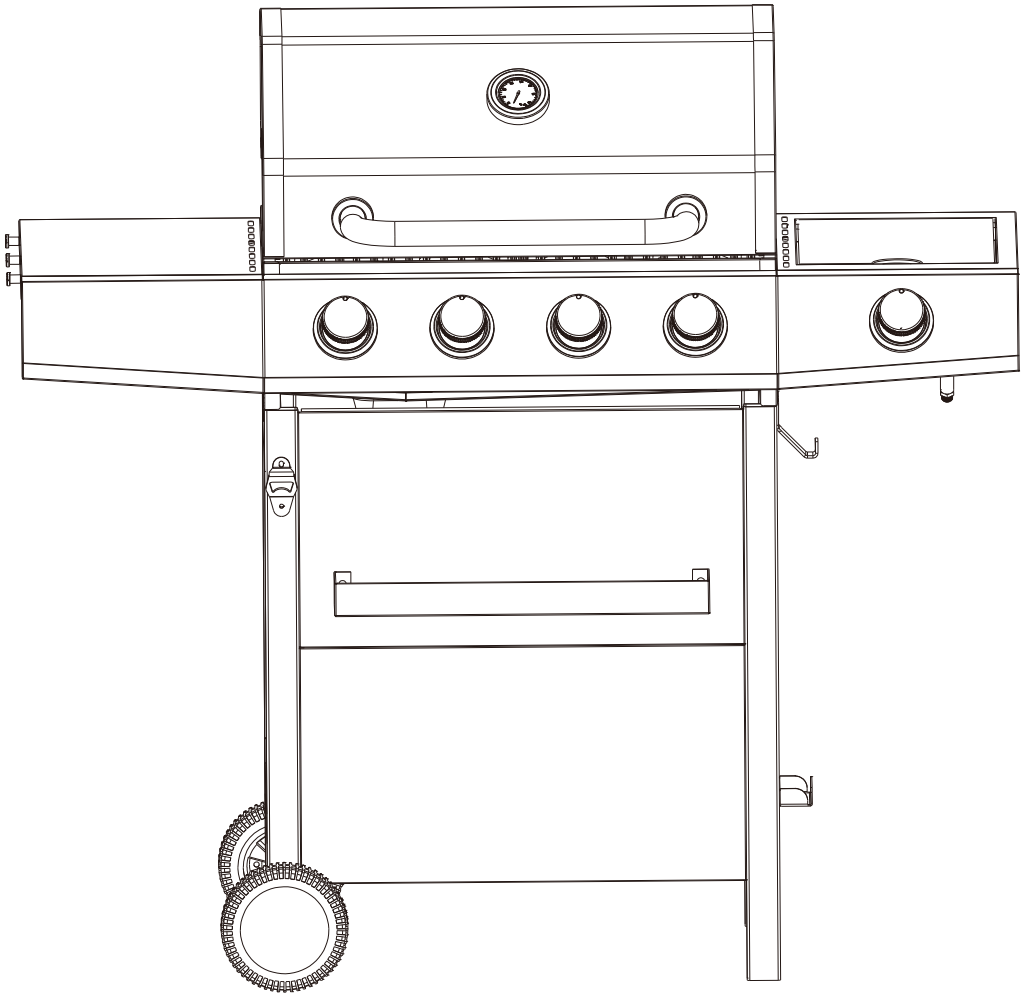

Important: Retain These Instructions For Future Reference.

This appliance is for outdoor use only. This is not a commercial appliance.

Questions, problems, damaged, missing parts?
Are you having Difficulty Assemblying this products?
Before returning, please contact our customer sercive:

service@nbfmarts.com

Table of Contents

Safety Information 2
Warnings 3-5
Operation Instructions 6-8
Troubleshooting 9
First-time Operation 10
Care and Maintenance 11-12
Product Specifications 13
Lighting instruction 13
Assembly Instructions 14-26

Safety Information

Assembler/Installer

This instruction manual contains important information necessary for the proper assembly and safe use of this appliance. Read and follow all warnings and instructions before assembling and using this appliance.

Leave these instructions with the consumer.

Consumer/User

Follow all warnings and instructions when using this appliance. Keep these instructions for future reference.

If you smell gas:

1. **Shut off gas to the appliance.**
2. **Extinguish any open flame.**
3. **Open lid.**
4. **If odor continues, keep away from the appliance and immediately call your gas supplier or your fire department.**
5. **Failure to follow these instructions could result in explosion, or burn hazard which could cause property damage, personal injury or death.**

1. **DO NOT store or use gasoline or other flammable liquids or vapors in the vicinity of this or any other appliance.**
2. **A LP cylinder not connected for use shall not be stored in the vicinity of this or any other appliance.**
3. **This grill is FOR OUTDOOR USE only and shall not be used in a building, garage, under overhangs or any other enclosed area.**
4. **DO NOT leave a lit grill unattended. Keep children and pets away from the grill at all times.**

Warnings

⚠ PROP 65 WARNING:
This product can expose you to chemicals including Chromium (hexavalent compounds), which are known to the State of California to cause cancer and birth defects or other reproductive harm.For more information visit www.P65Warnings.ca.gov.

IMPORTANT SAFETY

Please read this manual carefully and before installing or using your gas grill to ensure proper operation, installation, and servicing, and to reduce the risk of fire, burn hazard, and/or other injury. This manual should be retained for your information.

LOCATION OF GRILL

Remember that your grill is an outdoor appliance. Ensure your grill is positioned safely away from anything that can catch fire. Under no circumstance is this grill to be used indoors, this includes garages or any other enclosed area. This outdoor cooking gas appliance is not approved to be installed in or on any recreational grills are intended for single-family/residential use only.

Minimum clearance from sides and back of unit to combustible construction, 36 inches from sides and 36 inches from back(see below).

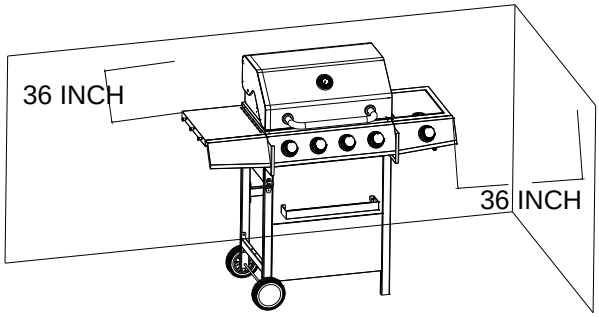

When determining a suitable location, take into account concerns such as exposure to wind, proximity to traffic paths, and keeping any gas supply lines as short as possible.

Proper location and use is also essential to ensure safe and continued trouble-free operation. Any non-approved alterations made to the grill will void its warranty.

INSTALLATION WARNINGS

Please read all installation, operating, and maintenance instructions thoroughly before installing or servicing this equipment.

Safe operation of gas grill depends upon proper installation. All gas installations and gas c onversions must be performed by a qualified technician or authorized service agent. Improper installation, adjustment, alternation, service, or maintenance may cause property damage, injury or death.

Always check the Rating Plate on the last page of the manual to make sure the gas supply you are connecting to is the gas type the appliance is manufactured for. Do not kink the gas line when installing.

Warnings

This gas grill must be installed in accordance with all local codes. If installation is planned in an area with no local codes, your gas grill must be installed in accord with the National Fuel Gas Code with the National Fuel Gas Code ANSI Z223.1, and storage and handling of CSA B149. 2 propane installation code.

This grill is for outdoor use only. The manufacturer cannot be held responsible for damage or injury caused by improper use of this appliance.

The installation must conform with local codes or in the absence of local codes, with CAN/ CGA-B149.2, Propane Installation Code.This grill CANNOT be converted to natural gas. DO NOT attempt to convert this grill with a different gas type.

FUEL CONCERNS & EXPLOSION HAZARDS

Do not store or use gasoline or other flammable vapors and liquids(that are not connected for use) in the vicinity of this or any other appliance. Keep the area clear and free from combustible materials, gasoline, and other flammable vapors and liquids, Failure to do so can result in death, explosion or fire.

Keep an ABC fire extinguisher accessible at all times, and never attempt to extinguish a grease fire with water or other liquids. Do not attempt to heat unopened containers on the grill. Pressure may build up and cause the container to explode. Never use charcoal or any other solid fuel in the grill.

PROPER USE

This grill in NOT intended for commercial use. Do not operate the grill in a building, garage, or any other enclosed areas. This could result in carbon monoxide buildup, which may cause injury or death. Grills are not designed or intended for installtion near a window or vent that feeds into the house.

Never test the grill for gas leaks using a lit match or any other open flame; see leak test procedures using soap-and-water solutions in the “Checking for Gas Leaks” section.

For proper operation, burners must be aligned with the valve orifice and seated in the bracket slot. This is accomplished by first placing the burner tube’s shutter hole securely over the valve orifice, and ensuring the male post on the rear of the burner rests in the opening in the grill chassis. Failure to do so could result in a fire and/or injury.

Consult the AHJ (Authority Having Jurisdiction) or a contractor in your area if you have any uncertainty regarding local codes.

LP CYLINDER CARE & STORAGE

Before each use, visually inspect the gas supply hose for cracks, cuts, or excessive wear. Replace the hose if necessary. Check for gas leaks as outlined on Page 6 before each use.

Ensure the gas supply hose does not come in contact with hot surfaces or sharp or rough edges of the grill or outdoor kitchen construction.

Do not twist the gas supply hose.

Never store an LP cylinder or tank indoors, or within the reach of children.

Warnings

The self-contained LP system appliance is design-certified to be used with a standard 20-lb., 12 1/4”-diameter, 18”-tall cylinder with right-handed connection threads. This is the maximum size LP tank to be used with this grill. The cylinder must be marked in accordance with the latest U.S. Department of Transportation specifications for LP gas cylinders. (DOT. CFR49 or National Standards of Canada CAN/ CSA-B359 Cylinders, Spheres and Tubes for the Transportation of Dangerous Goods).

Use only LP tanks with an OPD (Overfill Prevention Device).

IF YOU SMELL GAS

1. Shut off gas to the grill.
2. Extinguish any open flames.
3. If the odor persists, immediately call your local gas supplier or fire department.

BEWARE OF SPIDERS

BURNER TUBES MUST BE INSPECTED AND CLEANED BEFORE EACH USE.

Spiders and small insects occasionally spin webs or make nests in the burner tubes of gas grills. These webs can lead to a gas flow obstruction, which could result in a fire in and around the burner tubes. This type of fire is known as “flash-back” and can cause serious damage to your appliance and create an unsafe operating condition for the user. Although an obstructed burner tube is not the only cause of “flash-back,” it is the most common cause-making necessary frequent inspection and cleaning of the burner tubes.

GENERAL WARNINGS

- **All gas grills get hot during use. Use extreme caution when operating.**
- **Do not touch hot surfaces. Always use the lid handle to open or close the grill.**
- **Use cooking utensils with wood handles and insulated oven mitts when operating the grill.**
- **Never lean over the cooking surface when lighting or operating the grill.**
- **Never light the appliance with the hood closed and without being certain that the burners are positioned and seated over the gas valves and on the burner support.**
- **Close supervision is necessary when this or any grill is used near children. Keep children away from the grill during operation and until it has cooled off.**
- **Never cook without the grease cup in place.**
- **Never operate this grill while under the influence of alcohol or drugs.**
- **Do not store anything in the grill. Make sure food is not forgotten in the grill body; forgotten items could melt or catch fire when the grill is turned on.**

Before cleaning the grill, disconnect the rotisserie and trip the circuit breaker if equipped.

Never use the grill in windy conditions. If located in a consistently windy area (oceanfront, mountaintop, etc.), a wind break will be required. Winds blowing into or across the back hood gap can result in poor performance and/or cause the control panel and knobs to get dangerously hot.

To prevent injuries, do not use accessories that are not recommended by the manufacturer. The use of accessories, regulators, or components not recommended by the appliance manufacturer may cause injuries and will void warranty.

Operation Instructions

CHECKING FOR LEAKS

After all connection are made, check all connections and fittings on the LP gas tank valve, gas hose and regulator for leaks with a water and soap solution.

To prevent fire or explosion while testing for a leak:

- **Always perform leak test prior to lighting the grill.**
- **Do not smoke while testing for a leak.**
- **Always perform leak tests outdoors in a well-ventilated area.**
- **Do not use the grill until any and all leaks are corrected.**
- **Do not use any source of flame while testing for leaks.**
- **If you are unable to correct a leak, disconnect the propane supply and call a gas appliance service dealer.**

Leak detecting agent:

You can locate any leaks in the gas system using a leak detection agent. These are available at DIY shops or from liquid gas suppliers. Please follow the operating instructions of the leak detection agent.

PERFORM LEAK TEST

- **Prepare leak test solution by 50/50 ratio of liquid dish soap and water.**
  Total solution required is approximately 2 - 3 ounces (70 - 90 ml).
  Put leak test solution in a spray bottle.
- **Ensure all control knobs are in the OFF position.**
- **Connect the gas hose to the gas supply.**
- **Open the LP gas tank valve.**
- **Spray leak test solution on all gas carrying connections an of applied test solution indicates a gas leak. If leaks are detected or you smell or hear gas, shut off the gas supply valve immediately and repair or replace the defective part. Do not use the grill until all leaks are corrected.**

⚠ CAUTION:

Only use the regulator and hose assembly provided!

Do not use replacement parts that are not intended for this grill.

⚠ WARNING:

ALL INSTRUCTIONS AND SAFEGUARDS ON THIS PAGE MUST BE FOLLOWED TO PREVENT FIRE, DAMAGE AND/OR INJURY.

Operation Instructions

CONNECTING GAS CYLINDER

The propane gas supply cylinder to be used must be constructed and marked in accordance with the specifications for LP gas Cylinders of the U.S. Department of Transportation(D.O.T) or the National Standard of Canada, CAN/CSA-B339, Cylinders, Spheres and Tubes for Transportation of Dangerous Goods; and Commission, as applicable; and provided with a listed overfilling prevention device.

Use only 20-pound cylinders (height: 18.11 inches, tank diameter: 9.84 inches, foot diameter: 8.03 inches) equipped with a cylinder connection device compatible with the connection for outdoor cooking appliances.

The cylinder must include a collar to protect the cylinder valve. The gas cylinder should not be dropped or handled roughly!

If the appliance is not in use, the gas cylinder must be turned off. Storage of an appliance indoors is permissible ONLY if the cylinder is disconnected and removed from the appliance. Cylinders must be stored outdoors out of the reach of children and can not be stored in a building, garage or any other enclosed area. Your cylinder must never be stored where temperatures can reach over 125°F.

Place dust cap on cylinder valve outlet whenever the cylinder is not in use. Only install the type of dust cap on the cylinder valve outlet that is provided with the cylinder valve. Other types of caps or plugs may result in leakage of propane.

Before connection, be sure that there is no debris caught in the outlet of the gas cylinder, outlet of the regulator valve or in the outlet of the burner and burner ports. Connect regulator valve and hand-tighten firmly. Keep the propane cylinder valve closed and disconnect the propane cylinder from the regulator valve when the grill is not in use.

DO NOT obstruct the follow of combustion air and ventilation air to the grill. The propane cylinder must be arranged for vapor withdrawal and equipped with a listed overfilling prevention device. Please use the proper cylinder orientation to provide vapor withdrawal. NOTE: The cylinder must be fully upright for the cylinder to have vapor withdrawal only.

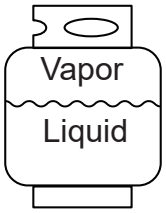

Correct

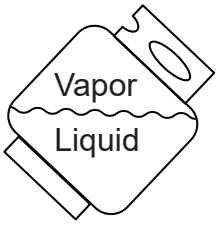

Wrong

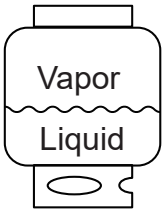

Wrong

⚠ CAUTION:

a.Do not store a spare LP-gas cylinder under or near this appliance.
b.Never fill the cylinder beyond 80 percent full.
c.If the information in (a) or (b) is not followed exactly, a fire causing death or serious injury may occur.

Operation Instructions

NOTE: **Other cylinders may be acceptable for use with this appliance if they are compatible with the appliance nesting hole and retention means. Refer to Page 8 of the Assembly Instructions for correct cylinder to cylinder holder connection.**

⚠ WARNING:

ALL INSTRUCTIONS AND SAFEGUARDS ON THIS PAGE MUST BE FOLLOWED TO PREVENT FIRE, DAMAGE AND/OR INJURY.

CONNECTING THE LP TANK

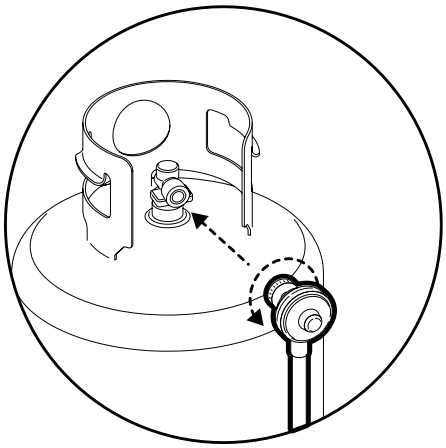

1. **The knob on the LP tank must be closed. Make sure that the knob is turned clockwise to a full stop. The cylinder supply system must be arranged for vapor withdrawal.**
2. **Check that the control knob on the control unit is turned off.**
3. **Remove the protective cap from the LP tank valve and coupling nut.**
4. **Hold the regulator in one hand and insert the nipple into the valve outlet. Be sure the nipple is centered in the valve outlet. The coupling nut connects to the large outside threads on the valve outlet. Use care do not cross thread the connection.**
5. **Hand-tighten the coupling nut clockwise until it comes to a full stop. Firmly tighten by hand only. Do not use tools.**

To Disconnect: Fully close the tank valve by turning clockwise.

Turn the coupling nut counterclockwise until the regulator assembly detaches.

Installation mode of the gas cylinder

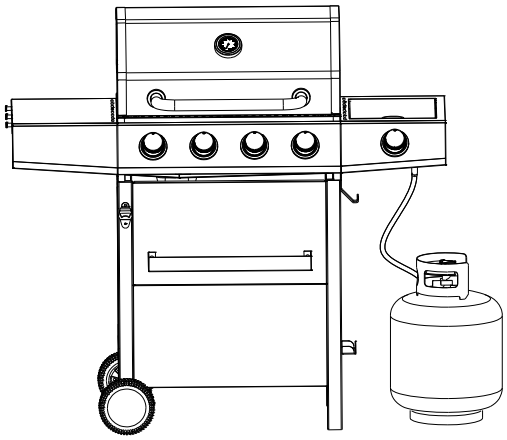

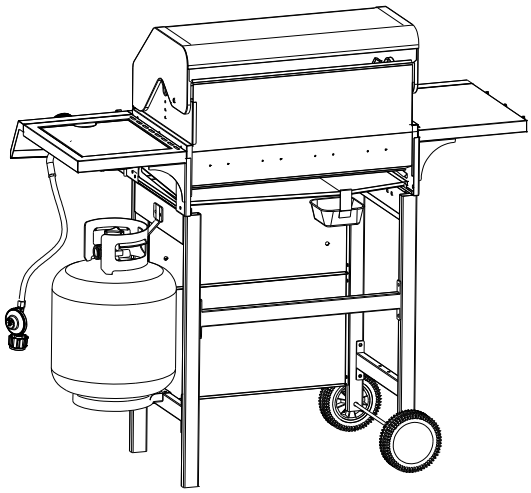

⚠ WARNING:

In the connection process, make sure:

- The regulator inlet connector mates with the cylinder valve out let properly,safely and firmly.
- The LP gas hose does not come in contact or remain in contact with the firebox.

Troubleshooting

Problem	Possible Cause	Solution
Low heat or low flame when valve is turned to high.	1. For propane: improper lighting procedure.	1. Carefully follow the lighting procedures outlined on Pages 10. Remember, all gas grill valves must be in the OFF position when the tank valve is turned on. Slowly turn the tank on to allow pressure to equalize. 2. Preheat the grill with main burners on high for 10–15 minutes.
Excessive flare-ups/ uneven heat.	1. Flame tamers are installed incorrectly. 2. Improper preheating. 3. Excessive grease and ash buildup on the flame tamers and in the drip pan.	1. Ensure the flame tamers are installed evenly and rested on the firebox brackets. See step 15 of assembly instructions on Page 24 . 2. Preheat the grill with main burners on high for 10–15 minutes. 3. Clean the flame tamers and drip pan regularly. Do not line the pan with aluminum foil. Refer to the cleaning instructions on Page 11-12 for more information.
Burners give off a yellow flame, accompanied by the smell of gas.	1. Possible spider web or other debris, or improper air shutter adjustment.	1. Remove the burner and give it a thorough cleaning. Slightly open the air shutter according to combustion air adjustment instructions (must be done by a qualified gas installer).
Flames lift away from burner, accompanied by the smell of gas, and possibly difficulty lighting.	1. Improper air shutter adjustment.	1. Slightly close the air shutter slightly according to combustion air adjustment instructions (must be done by a qualified gas installer).
Side burner will not light with the igniter, but will light with a match.	1. Incorrect installation. 2. Loose electrode wire or switch-terminal wires. 3. Lifting flames on the burner.	1. Ensure the electrodes are not bent and the 2 prongs are close together but not touching. 2. Check that the electrode wire is firmly pushed onto the terminal on the back of the igniter. Also ensure that the lead wires from the module to the ignition switch (if equipped) are firmly pushed onto their respective terminals. 3. See previous solution.
Main burners will not light with the igniter, but will light with a match.	1. Dirty piezo ignition.	1. Slightly close the air shutters according to combustion air adjustment instructions (must be done by a qualified gas installer). Then clean the piezo ignition with a soft bristle brush, or gently sand with sandpaper.

If the above solutions do not solve your problem, or you need to replace the accessories, please contact our Customer Service.

First-time Operation

Prior to using your gas grill, verify that all of the following is true:

- The burner tube is free of any debris or obstruction.
- The proper gas type, gas connection, and regulator settings have been installed.
- You've checked for gas leaks.
- Minimum clearances listed on certification tag are maintained.
- All packaging has been removed.
- All parts and components are properly in place.
- An installer-supplied manual gas shutoff valve is fully accessible.
- Always inspect the gas supply metal hose before every use. If the metal hose shows any signs of abrasions or cuts, DO NOT use the grill. The metal hose must be replaced before using again.
- The pressure regulator and metal hose assembly supplied with this grill must be used. Any requirement for a replacement regulator and metal hose assembly must be made through the manufacturer.

Lighting the Appliance

1. Read instructions before lighting.
2. Open lid during lighting.
3. If ignition does not occur in 5 seconds, turn the burner control(s) off, wait 5 minutes, and repeat the lighting procedure.

Manually Lighting the Burners

1. Open the lid,make sure the control knob is in the "Off" position.
2. If you have just attempted to light the burner, allow 5 minutes for any accumulated gas to dissipate. Use caution by standing as far away from the burners as possible. Do not put your hands, arms, head, or any other body parts close to the grill when lighting.
3. Push in and turn the control knob to Max.
4. If the burner does not light after 5 seconds, turn the control knobs to the OFF position.
5. Wait 5 minutes until the gas clears before attempting to light again.
6. If the burner does not light after several attempts, immediately close all gas valves and consult an authorized service technician.

⚠ WARNING:

"Flash-back" may occur in or around the burner tubes. This event exhibits a characteristic "whooshing" or jet-like sound. If this occurs, immediately turn off your burners, then remove and clean them with soap, water and a brush until all foreign objects are removed.

Before cooking with your appliance for the first time, burn off any foreign matter and rid the unit of any odors by running the main burners on Max for about 10 minutes. Similarly, you should always preheat the grill before cooking by turning the burners to Max for 5 minutes .

Care and Maintenance

Cooking Grates

The best time to 'burn-off' the cooking grates is after every use (approx. 15 minutes). The grill is already hot from cooking thus requiring less fuel to obtain necessary temperature for 'burn-off'.

To 'burn off' or heat clean your grill, turn the burners to highest position and run for 15 minutes with the lid closed. Then turn off the burners and use a wire brush to clean excess food residue from the grates.

⚠ CAUTION:
Ensure the grill is cool before cleaning and conducting maintenance and with the gas supply turned off at the LP-Gas Cylinder.

Recommended Cleaning Supplies

Mild liquid dish soap, warm water, nylon cleaning pad, wire brush,DO NOT use cleaners that contain acid, mineral spirits or any abrasive substance.

Outside Surfaces

It is recommended to use only mild dish soap and hot water to clean grill and grill parts.
Rinse with warm water and allow to completely dry.

Inside Bottom Pan of Grill Body

To avoid flare-ups, the bottom pan of the cooking box should be kept clean on a regular basis.Remove residue using a brush, scraper and/or cleaning pad. Wash with mild dish soap and warm water. Rinse with warm water. Avoid water splashing into vent tubes of burners.

Heat Tents

Clean residue with wire brush and wash with mild dish soap and warm water. Rinse with warm water.

Grease Cup

Empty the grease cup and clean with mild dish soap and warm water on a regular basis.

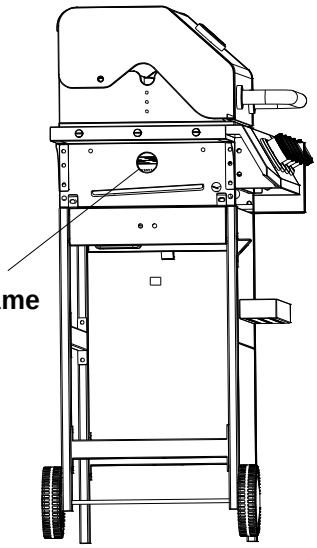

Checking The Flame

For maximum fuel efficiency and cooking performance, flame should be a blue-yellow color and be between 1- 2 inches high. To check the flame ,view the flame through the holes in both sides of the firebox.

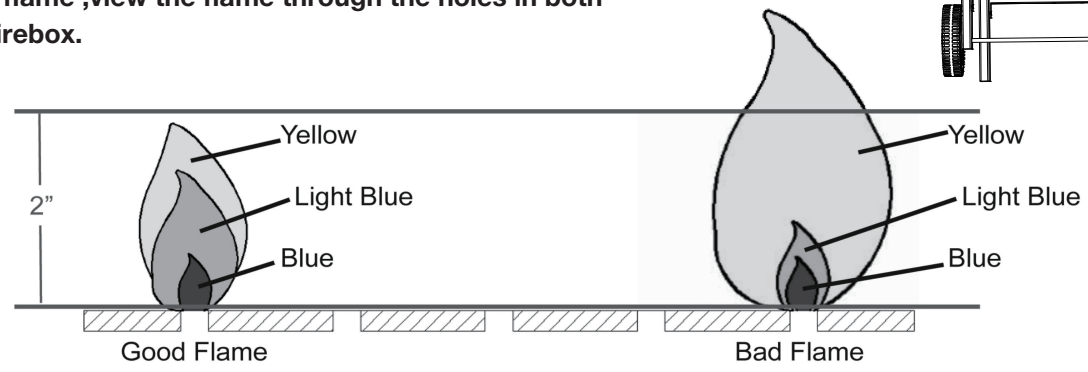

Care and Maintenance

Burner Assembly

Removing The Burner Assembly

1. Make sure all control knobs are in the OFF position, the LP gas supply valve has been closed, and the gas hose is disconnected from the gas supply.

2. Open lid and remove warming rack, cooking grates, heat tents, clip for burner, ignition chain and main burners.

3.Slide the burner forward and out of the firebox.

4.Detach ignition wire from electrode.

Cleaning the Burner Assembly

– Make sure the grill is cool

1.Make sure all control knobs are in the OFF position,the LP gas supply valve has been closed, and the gas hose is disconnected from the gas supply.

2. Remove warming rack, cooking grates and heat tents.

3. Detach burner by removing the cotter pins at the back of the burners to detach them from the brackets.

4. Detach ignition wire from electrode by hand only. DO NOT use pliers or any other tool as it may damage the electrode or wire.

5. Lift burner slowly.

6. Ensure all burner ports are clear of clogs. Use of a pin or paper clip works well.

7. Ensure burner is free of any damage. If damage is found, replace it with new burner.

8. Ensure the end of the burner and primary air screen are clear from insect nests, dirt or debris.

Re-installing the Burner

⚠ WARNING:
If the instructions above are not followed, a fire or explosion may result, possibly causing serious bodily injury or death.

Other Care and Maintenance

1. Keeping outdoor cooking gas appliance area clear and free from combustible materials, gasoline and other flammable vapors and liquids.

2. Not obstructing the flow of combustion and ventilation air.

3. Keeping the ventilation opening(s) of the cylinder enclosure free and clear from debris.

4. Visually checking burner flames including pilot burner flame if provided, with pictorial representations.

5. Clean outdoor cooking gas appliance, including special surfaces, with recommended cleaning agents, if necessary.

6.Checking and cleaning burner/vent tubes for insects and insect nests. A clogged tube can lead to a fire beneath the grill.

7.Half-year maintenance once time.

Product Specifications

Item: 4 burner gas grill with side burner

MPN:V01GQ014S

Main Burner rated BTU:38200BTU/Hr

Side Burner rated BTU:8550BTU/Hr

Warning

Use outdoor only

Read the instructions before using the appliance.

WARNING:Accessible parts may be very hot.

Keep young children away.

Lighting instruction

1.Open the lid of the grill before attempting to light the burners.

2.Turn all the control knobs to the "●" OFF position

3.Connect the regulator to the gas bottle. Turn on the gas supply at the regulator and at the gas bottle valve.

4.Push down the control knob and keep pressing 3-5 seconds, while turning counter to the "MAX" position,

A clicking sound will be heared and ignition will take place.

5.If the burner has not lit, turn knob off, wait 5 minutes and repeat step 4.

6.Repeats step 4 to 5 for other burners

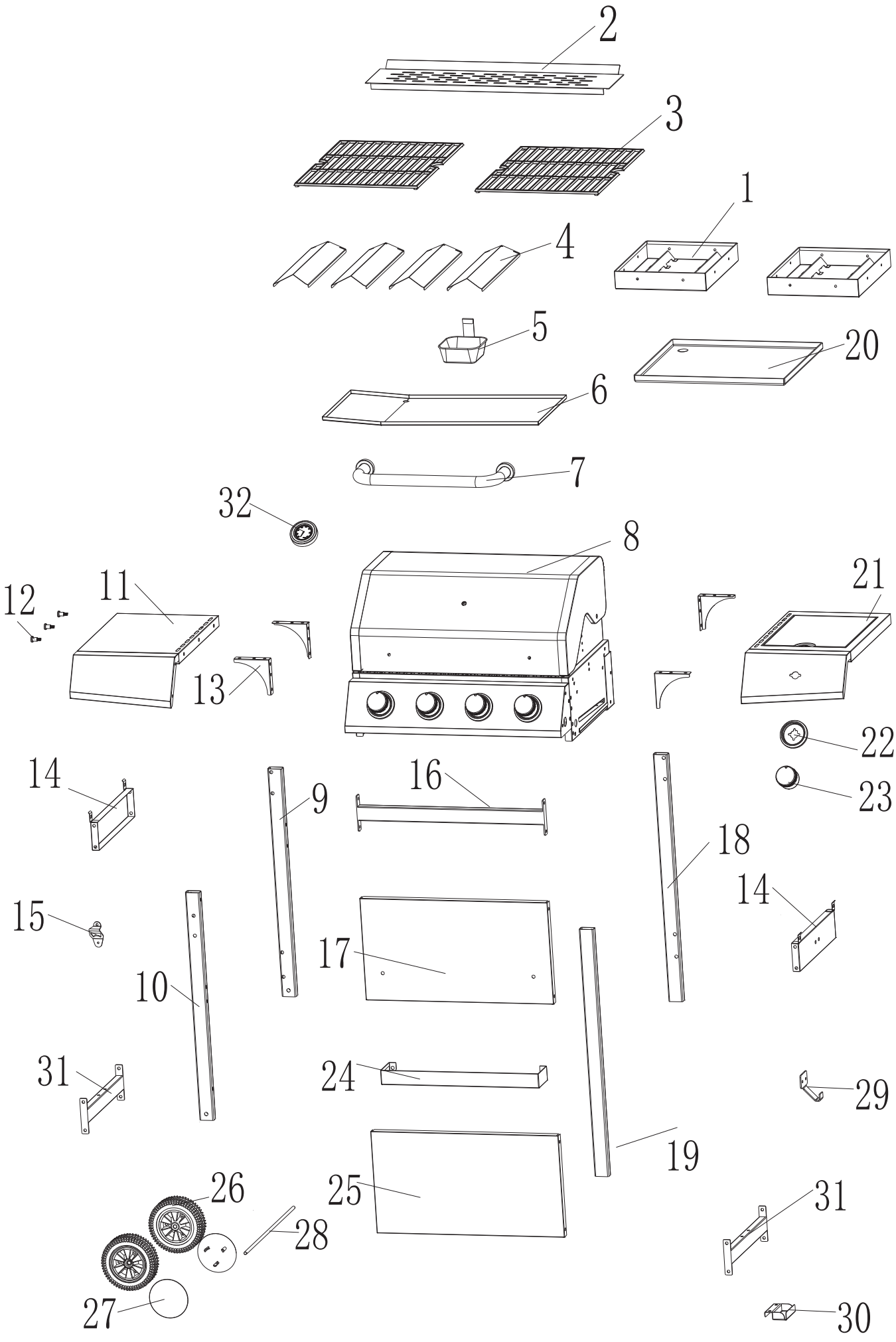
2
3
1
4
5
20
6
7
32
8
12
11
21
13
22
23
14
16
9
18
14
15
17
10
31
24
29
19
25
26
31
28
27
30

PART		QTY
1.	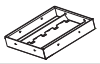	X 2
2.	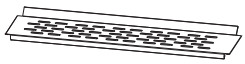	X 1
3.		X 2
4.		X 4
5.		X 1
6.	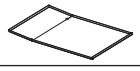	X 1
7.		X 1
8.	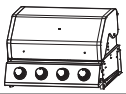	X 1
9.		X 1
10.		X 1
11.		X 1
12.		X 3
13.		X 4
14.	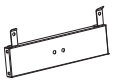	X 2
15.		X 1
16.		X 1
17.		X 1
18.		X 1
19.	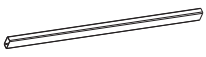	X 1
20.	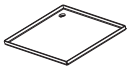	X 1

PART		QTY
21.		X 1
22.		X 1
23.		X 1
24.	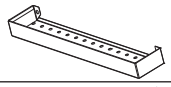	X 1
25.		X 1
26.		X 2
27.		X 2
28.		X 1
29.		X 1
30.		X 1
31.		X 2
32.		X 1

Hardwares & Screws:

A.		(M6x12mm)	X 70
B.		(M6x50mm)	X 2
C.			X 2
D.		(M4x8mm)	X 2
E.			X 2

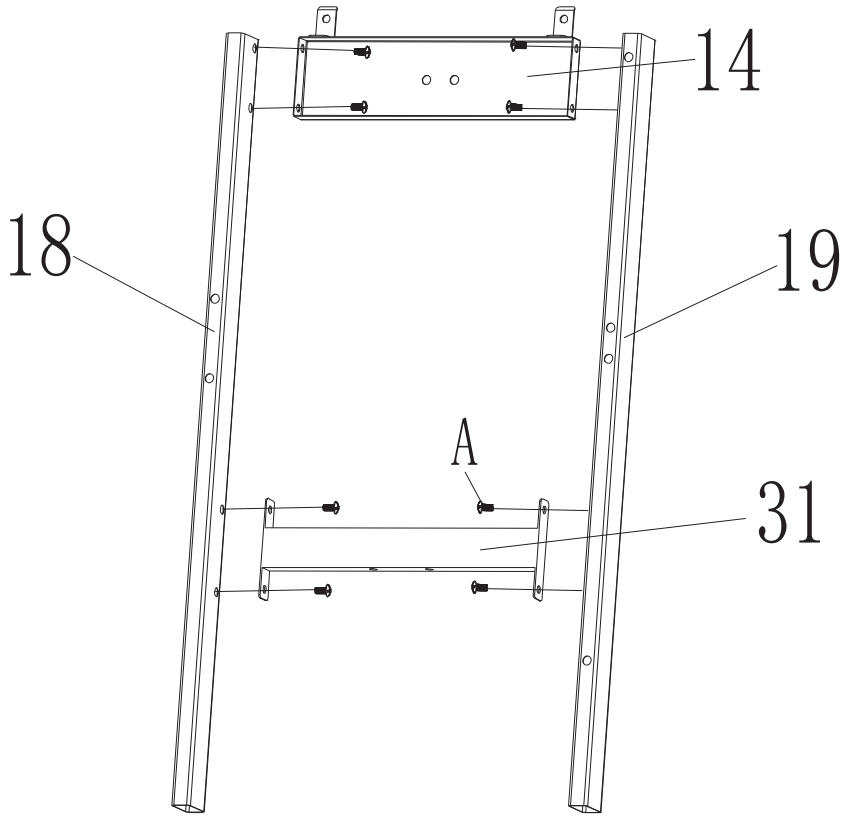

1 **A(M6x12mm) X 8**

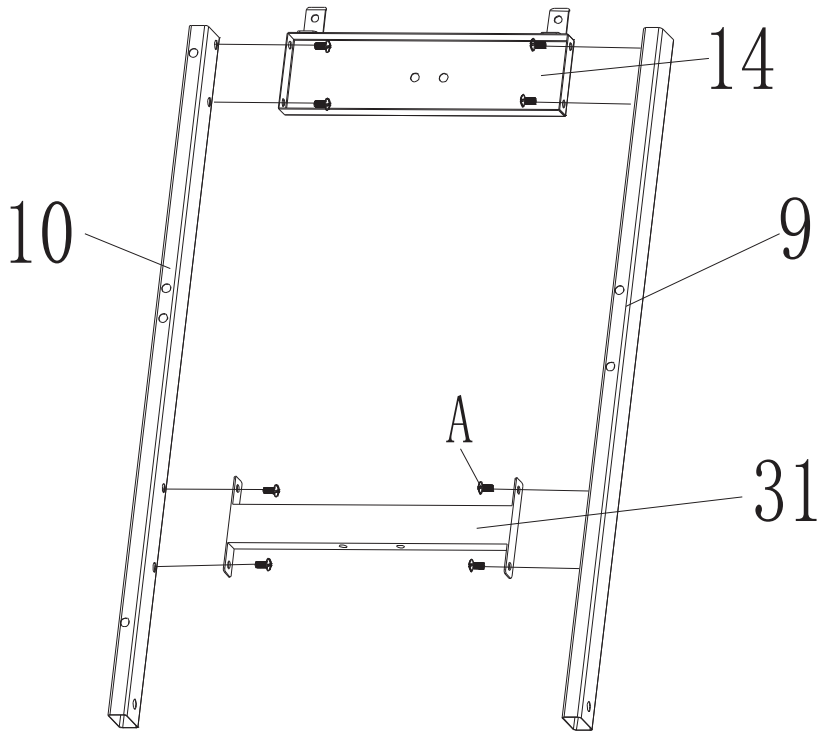

2 **A(M6x12mm) X 8**

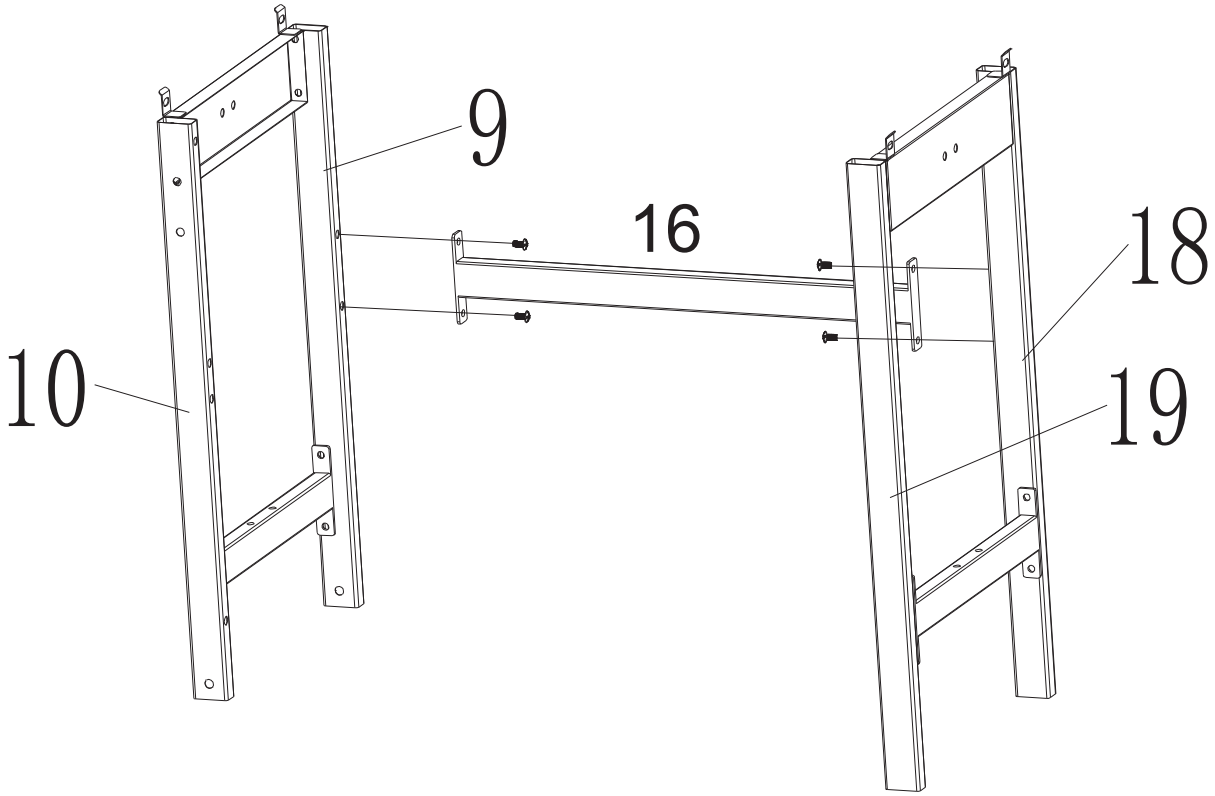

3 **A(M6x12mm) X 4**

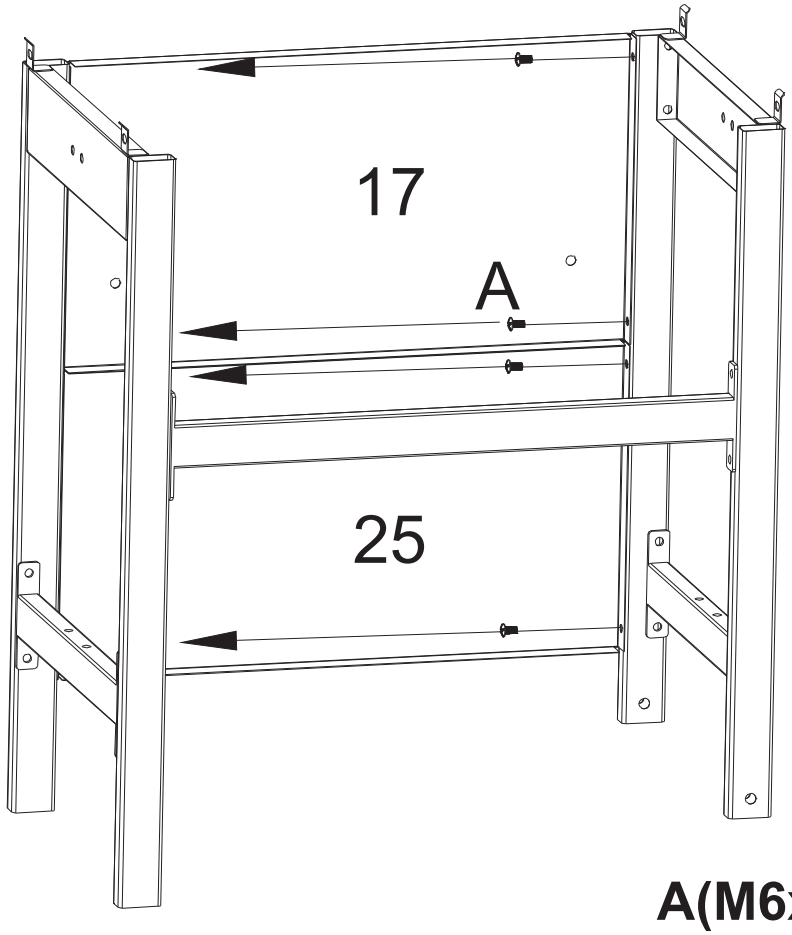

4 **A(M6x12mm) X 8**

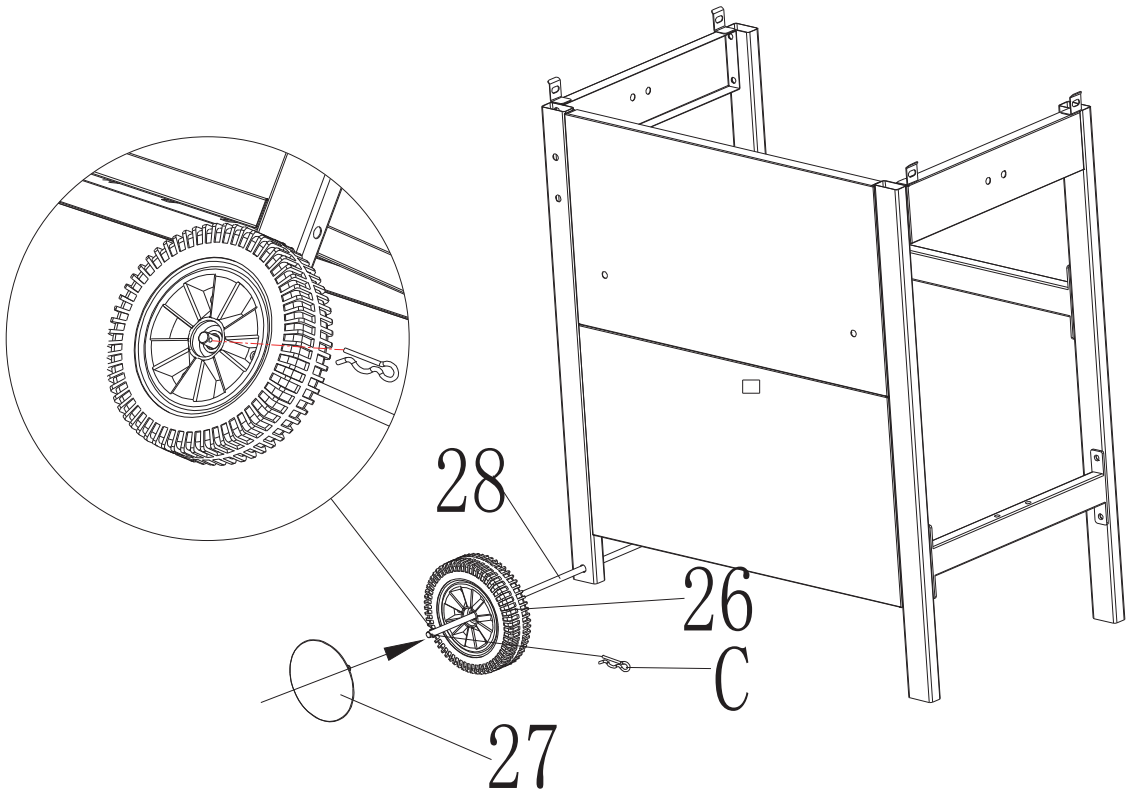

5



C X 2

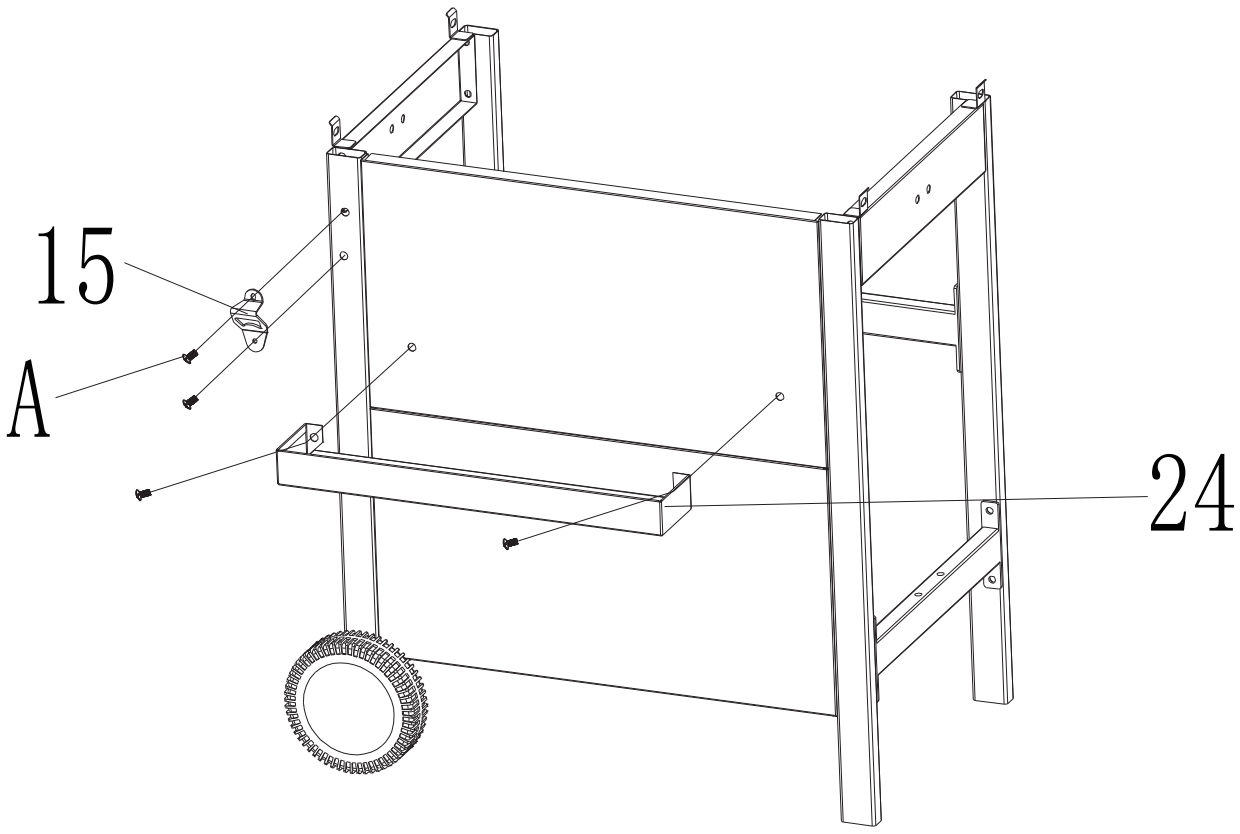

6

A(M6X12mm)X 4

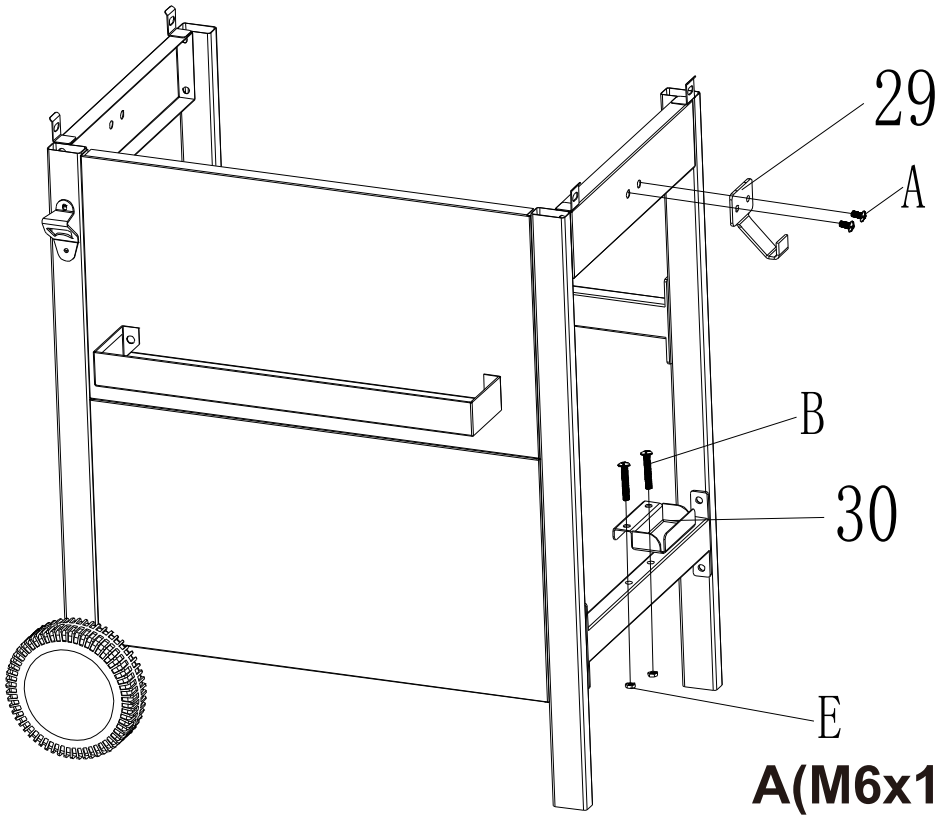

A(M6x12mm) X 2

B(M6x50mm) X 2

E X 2

7

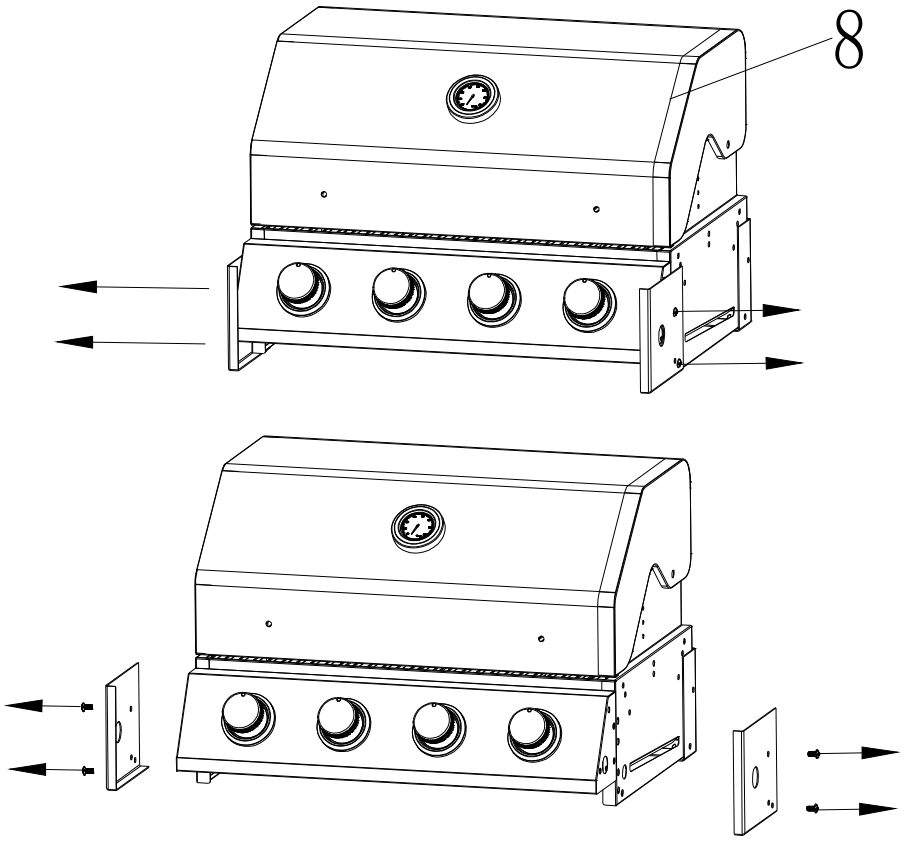

8 Please remove the front shipping metal protective brackets before assembly.

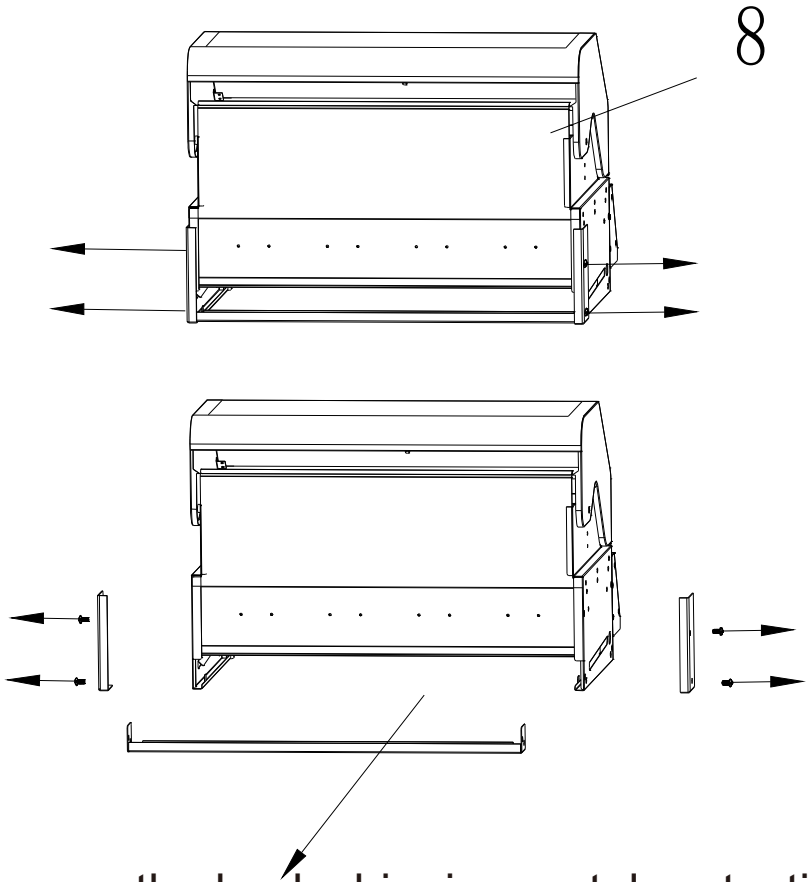

9 Please remove the back shipping metal protective brackets before assembly.

The screw for fix thermometer was pre-insatlled on it.

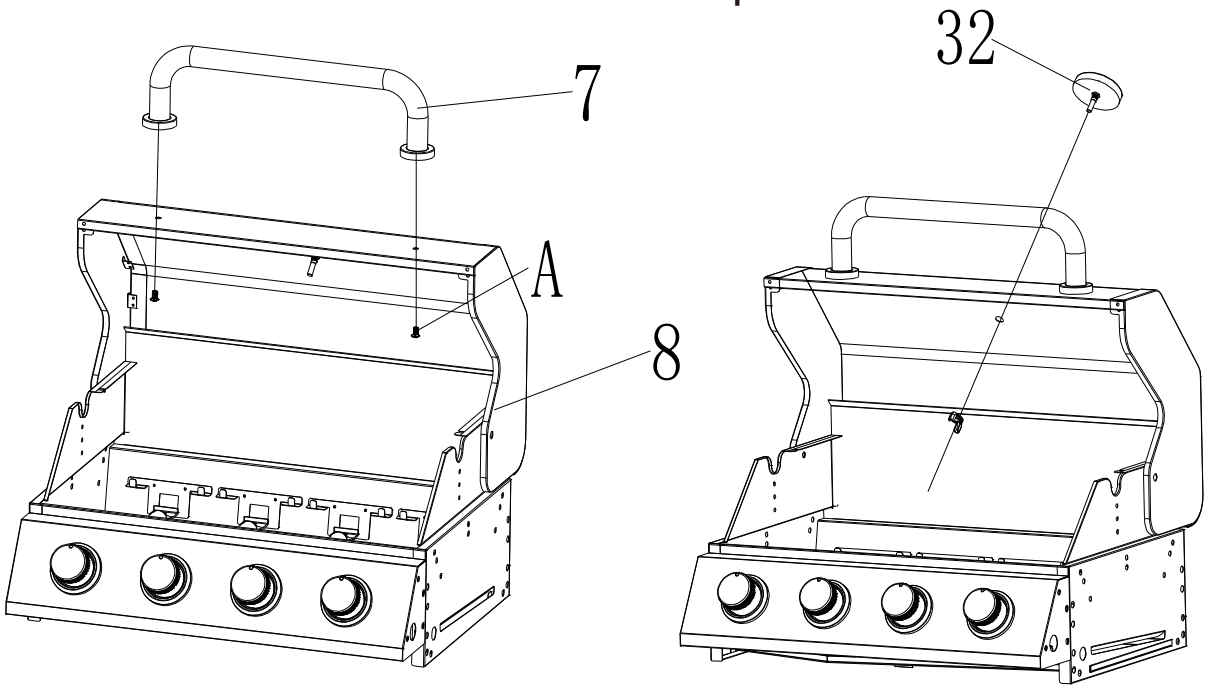

10 **A(M6x12mm) X 2**

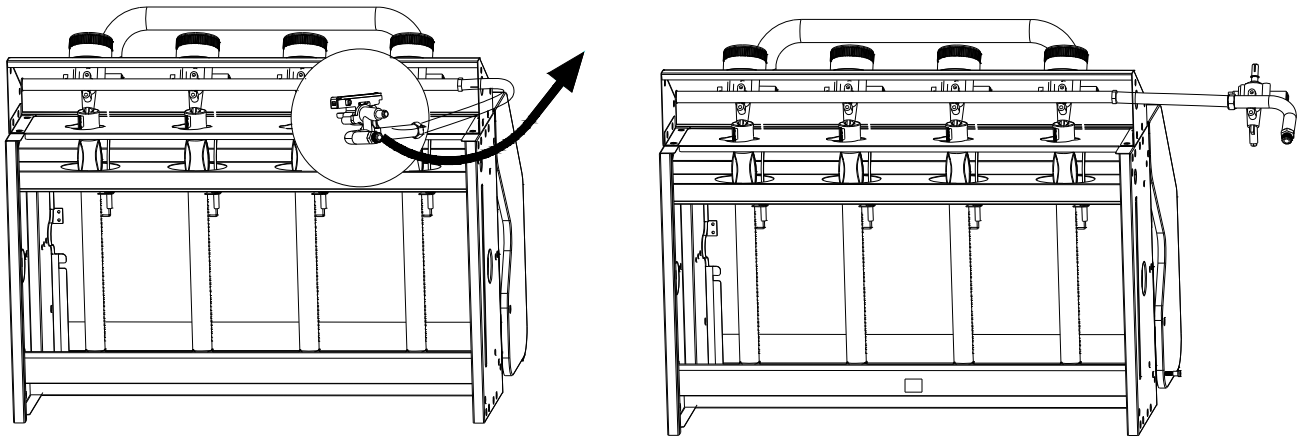

Please take out the corrugated pipe and side burner valve from the bottom of the control panel.

11

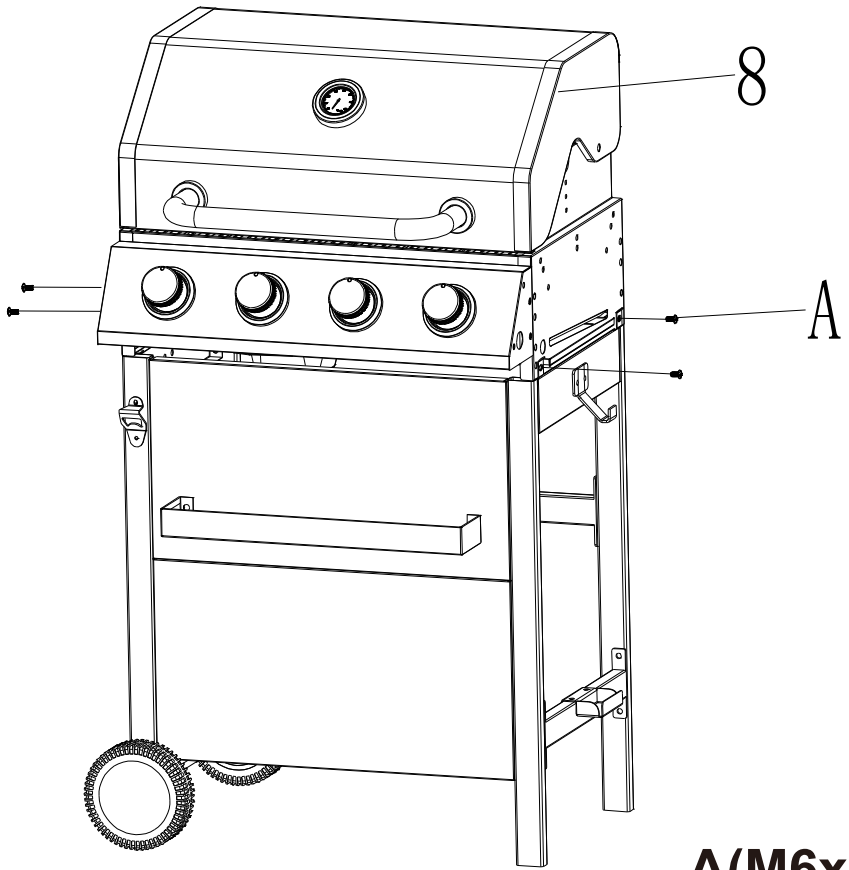

12

A(M6x12mm) X 4

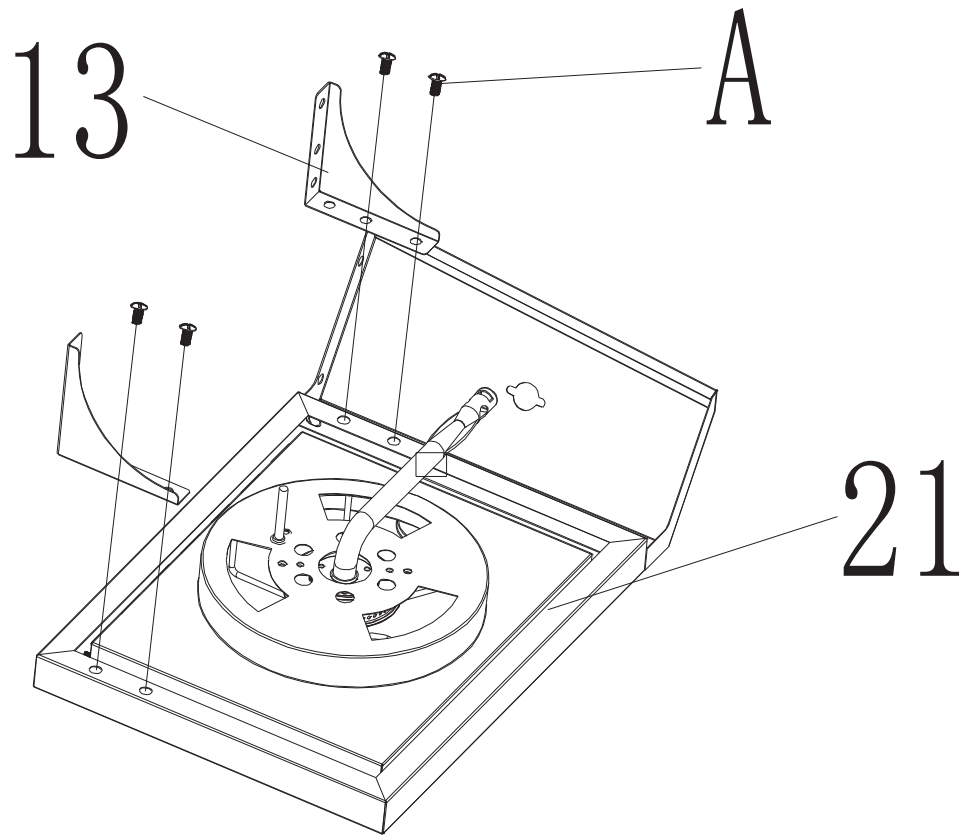

13 **A (M6x12mm) X 4**

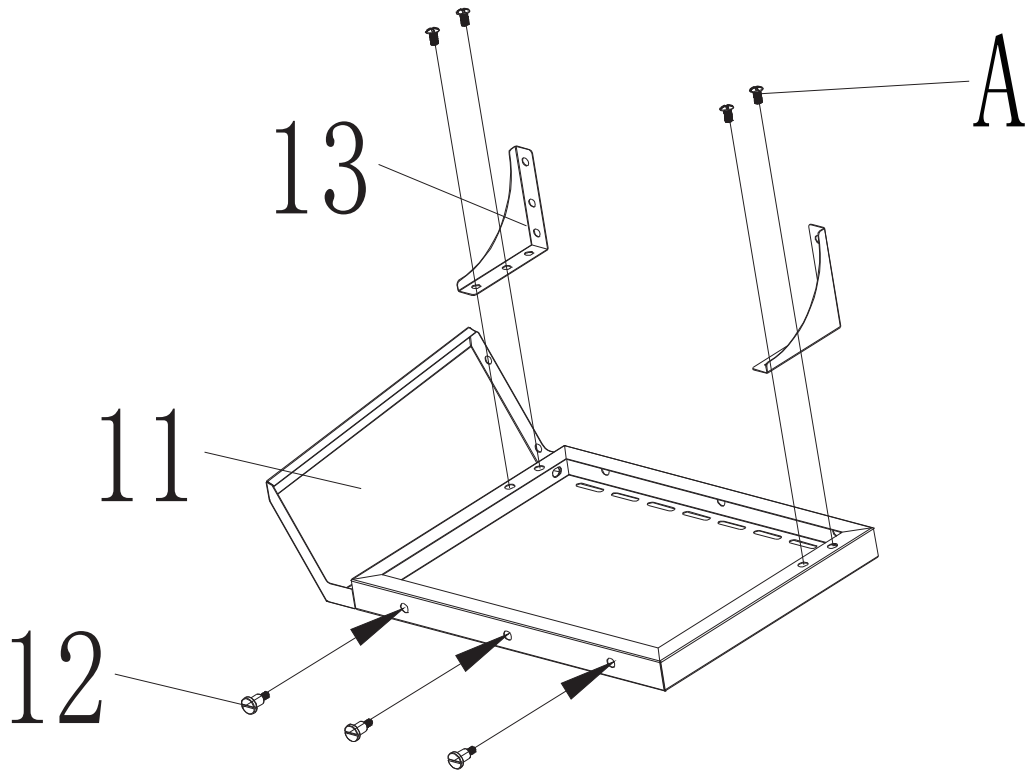

14 **A (M6x12mm) X 4**

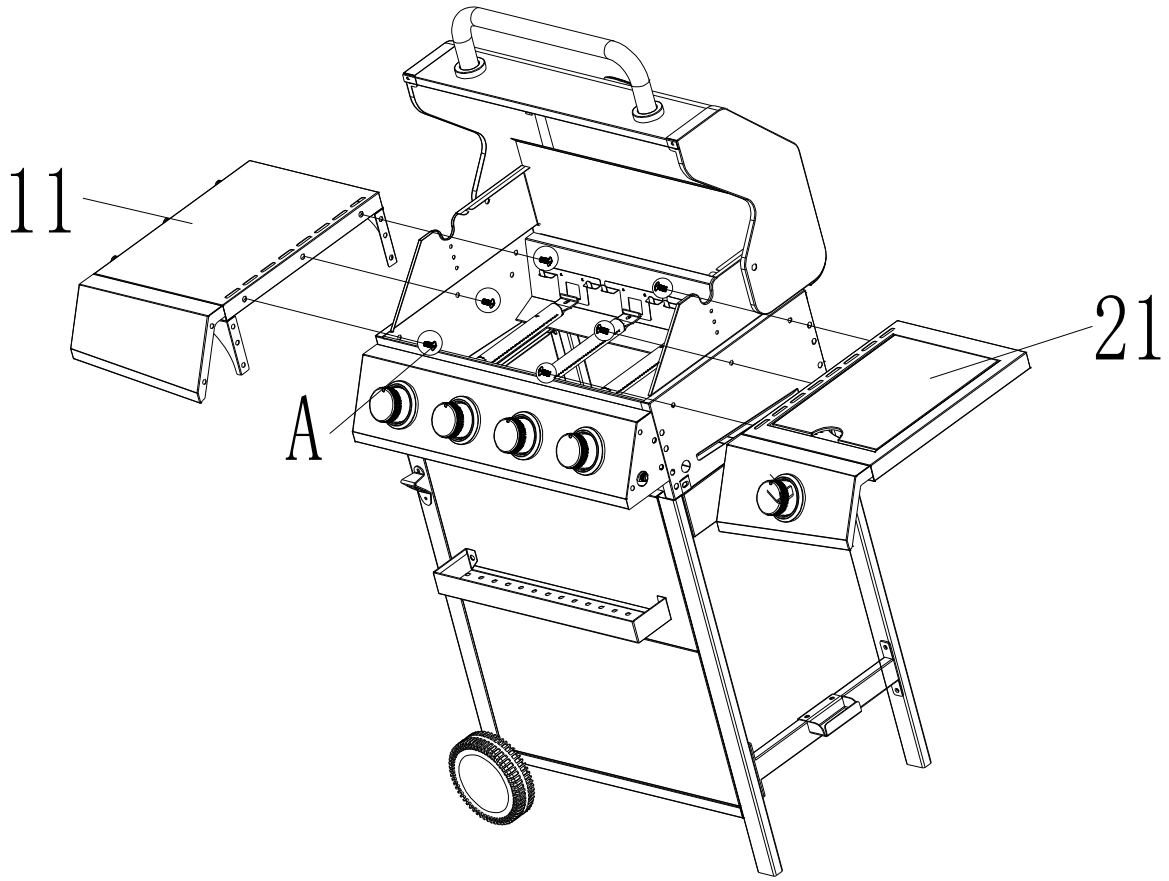

15

A(M6x12mm) X 6

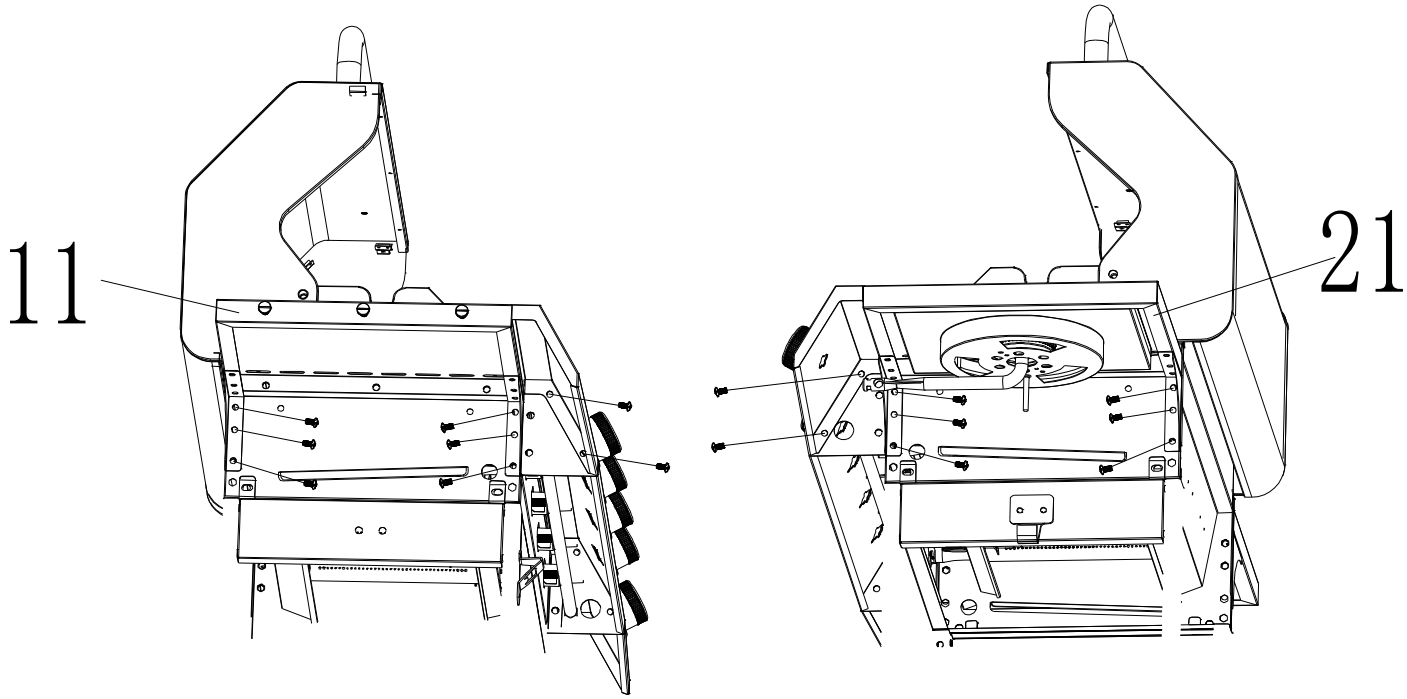

16

A(M6x12mm) X 16

Please insert the side burner valve to side burner.

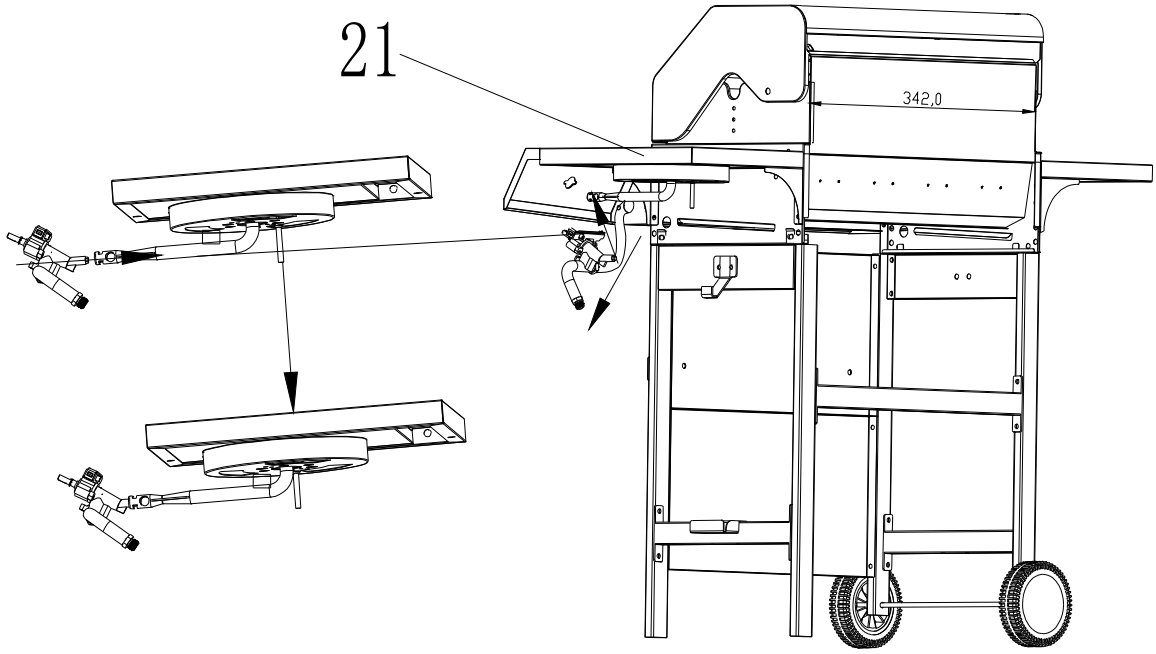

If you have problem here for install and use side burner, pls kindy email us to get quickly reply on video guide. Our email address:

service@nbfmarts.com

17

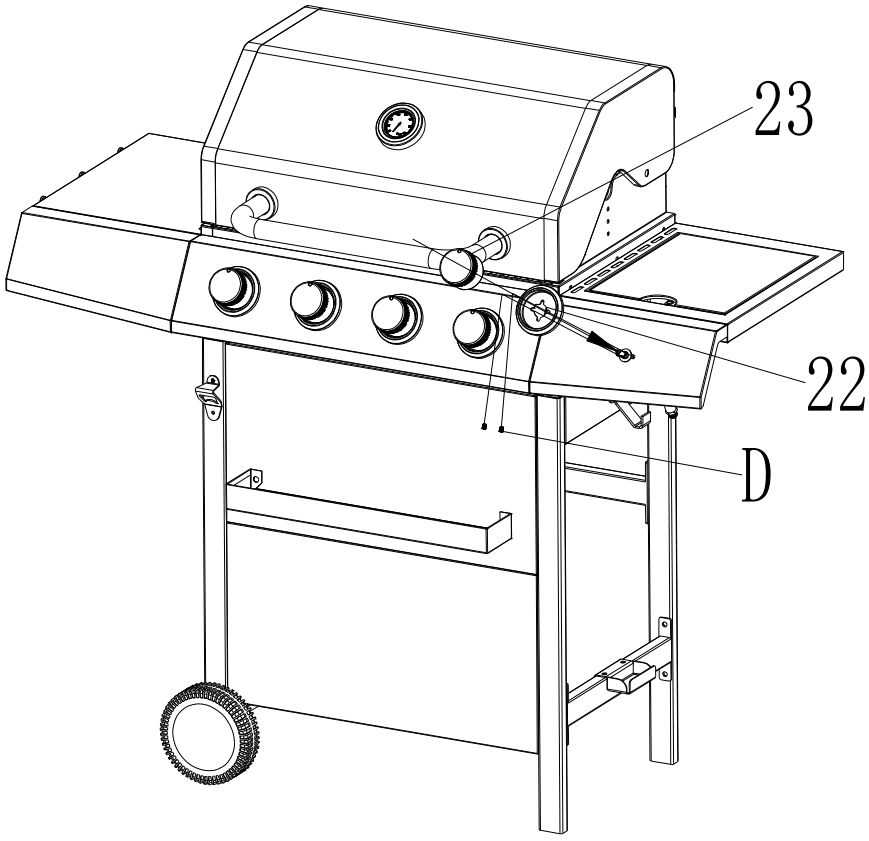



18 **D (M4X8mm)X 2**

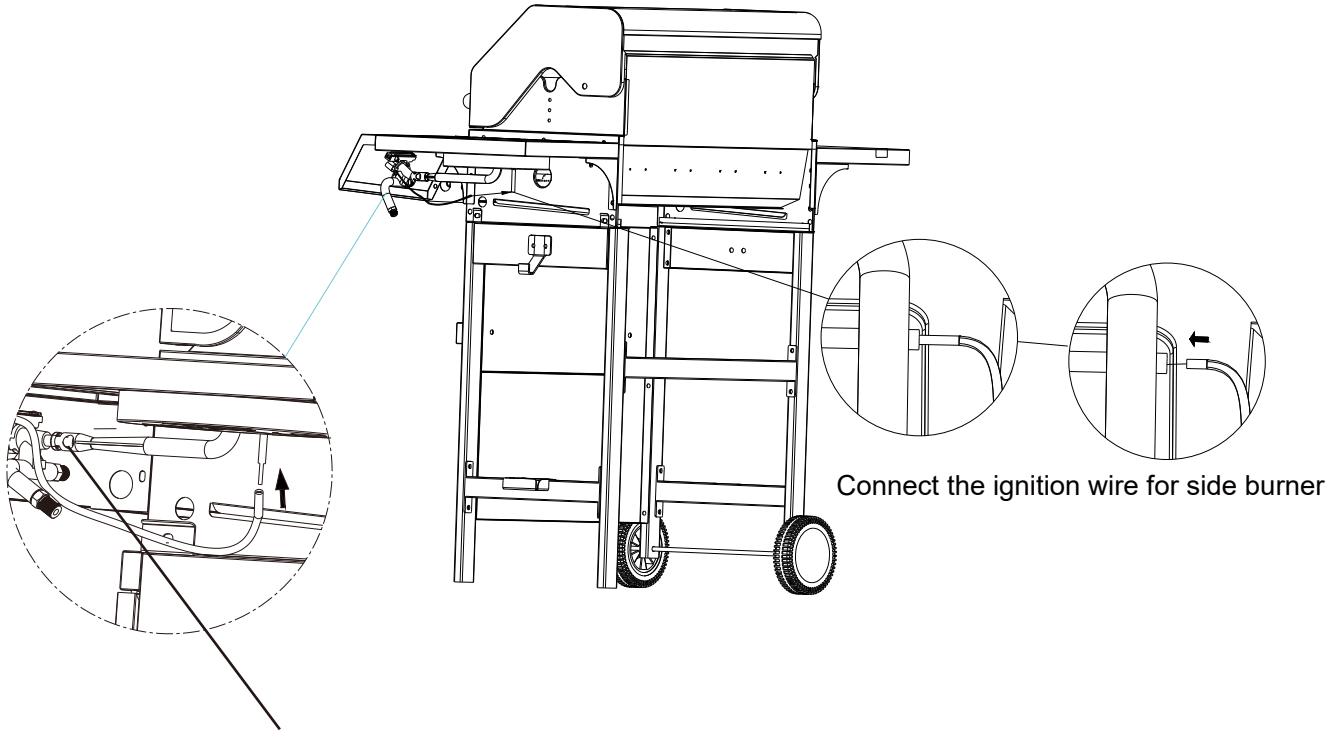

Connect the ignition wire for side burner

The hole here between pipe and side burner is correct for mix Oxygen for better burning.

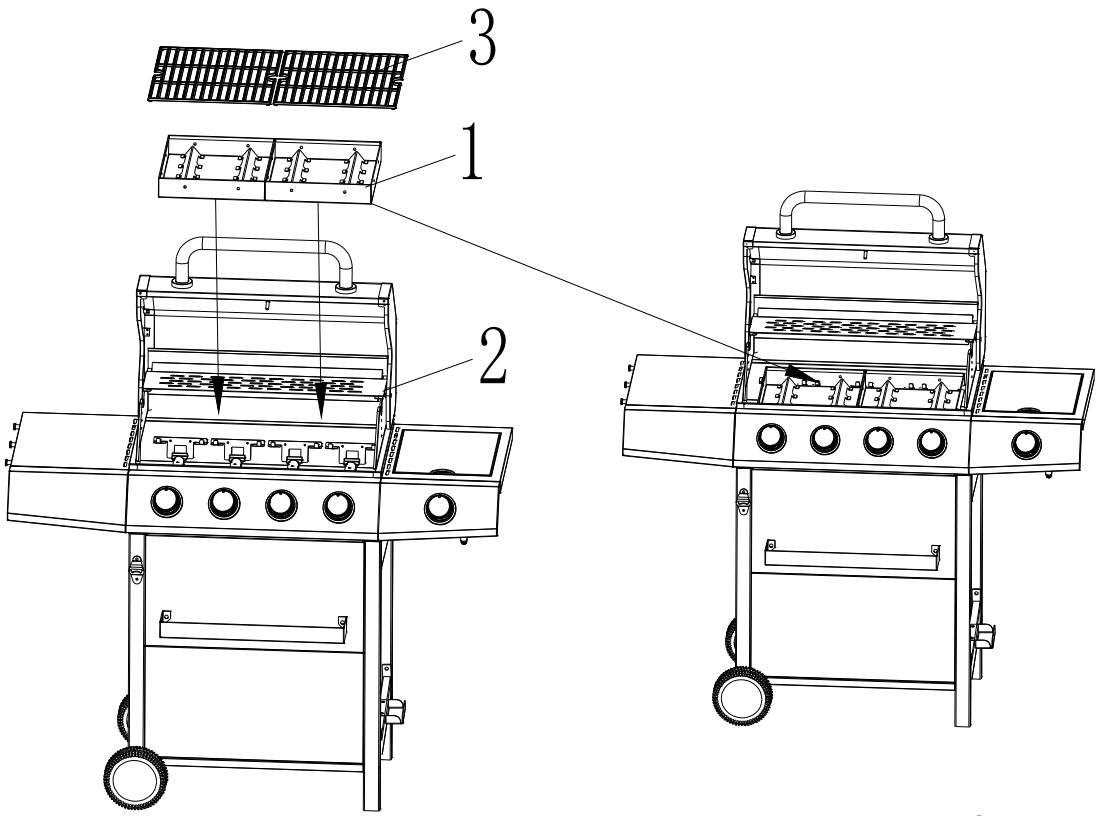

If you want to use it as a charcoal grill, just take out the flame tampers, and put the 2pcs charcoal tray above the burner, then put in the grates.

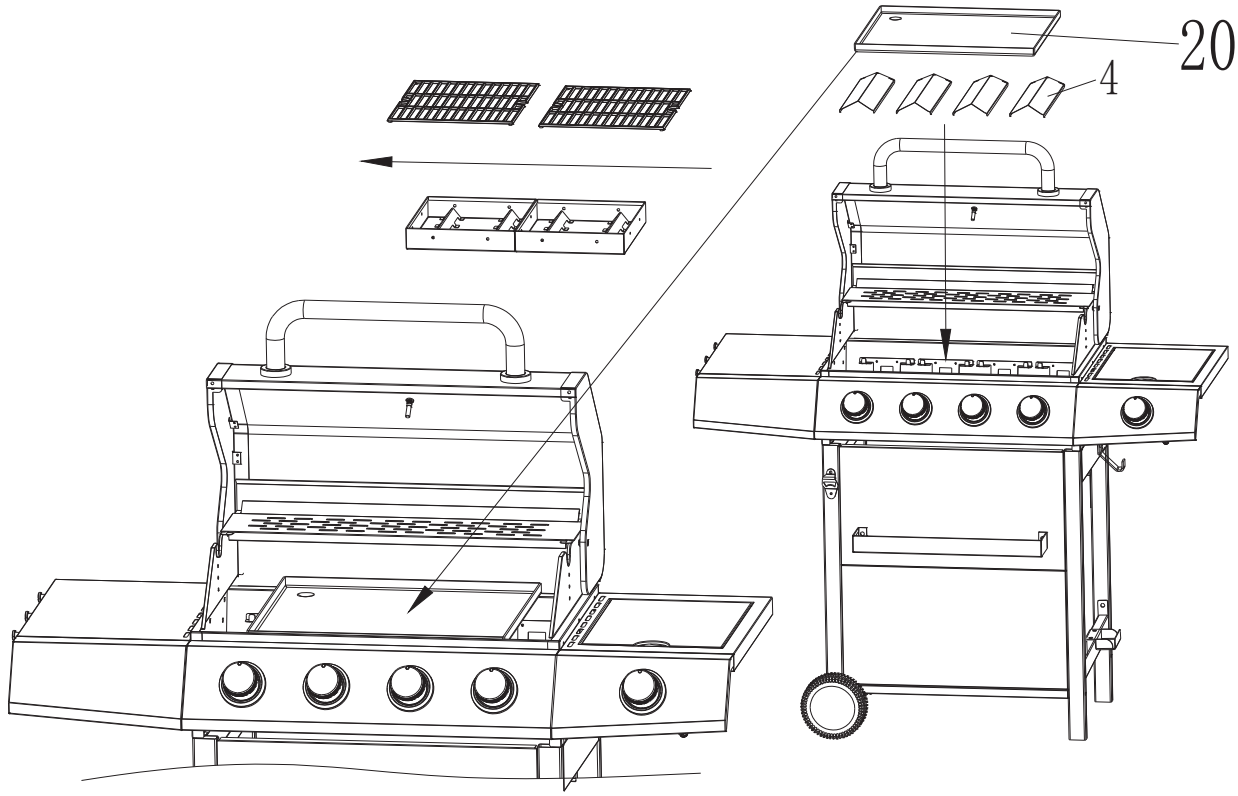

If you want to use it as a griddle, just put inside the flame tampers, then put the griddle inside of the firebox for cooking.

21

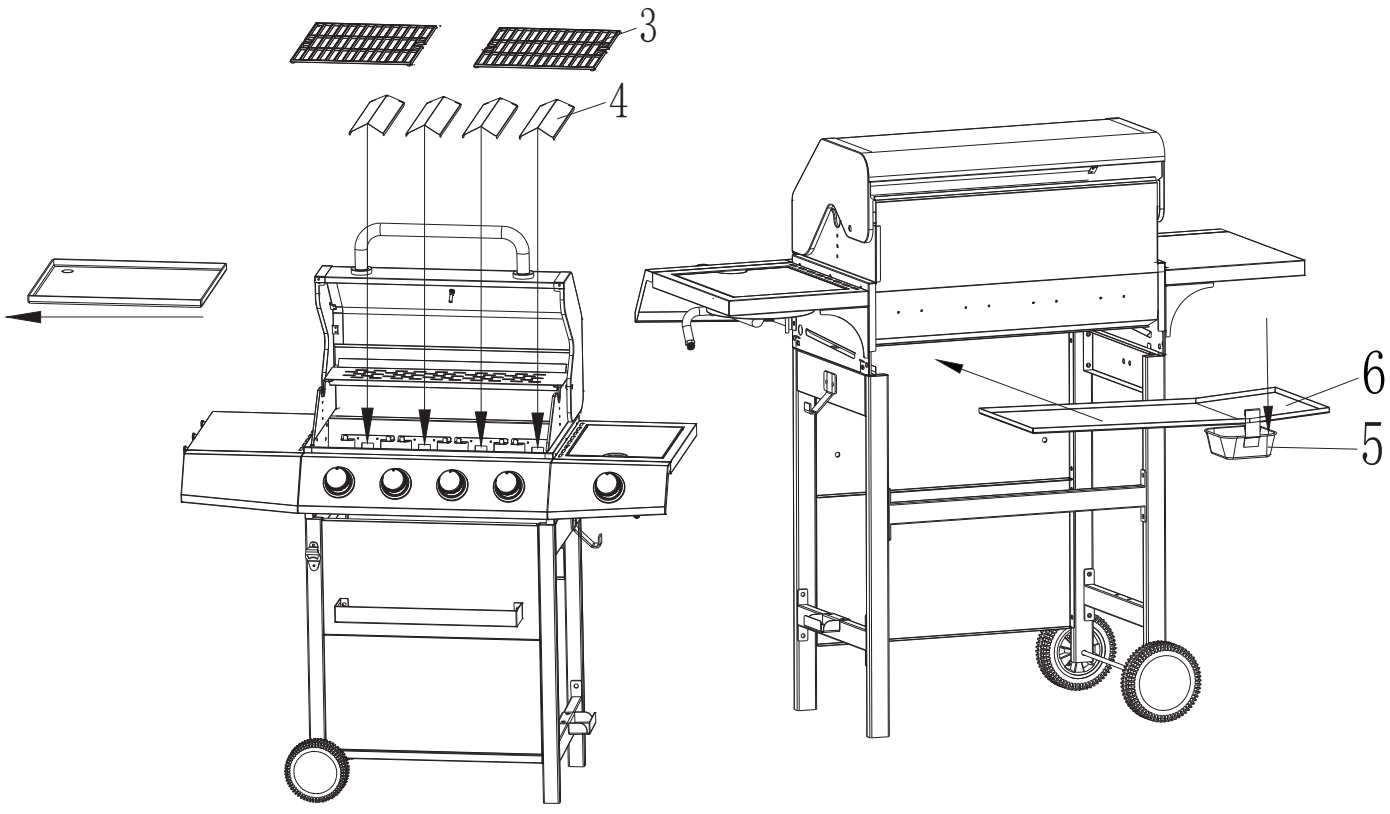

You also can use it as a normal gas grill with cast iron grates.

22
