TEAR SHEET

# Varenna 19" Pendant

Item # ARN 5137PN-CG/WG

Designer: AERIN

Height: 24.5"
Width: 19.25"
Canopy: 5.75" Round
Finishes: HAB, PN
Glass Options: CG/WG
Socket: 4 - E12 Candelabra
Wattage: 4 - 6.5 LED B11
Weight: 26 Pounds
Note: 120V Configuration Only



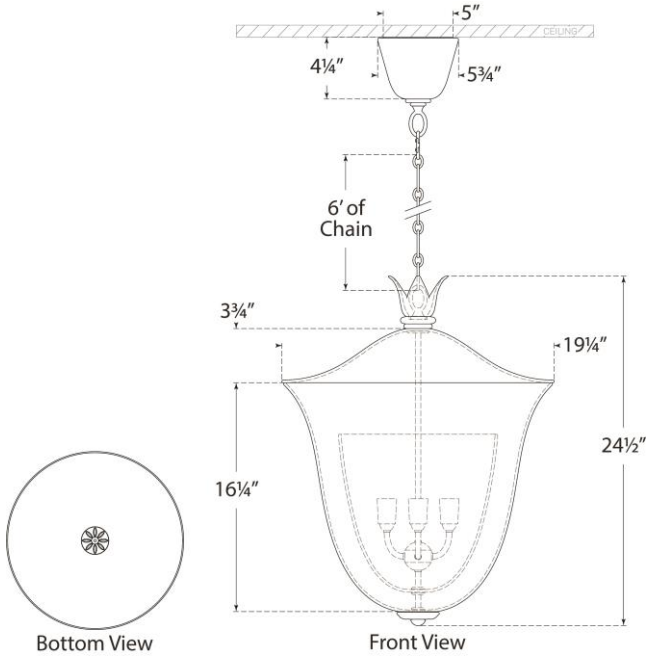


VISUAL COMFORT & CO.