INSTALLATION MANUAL

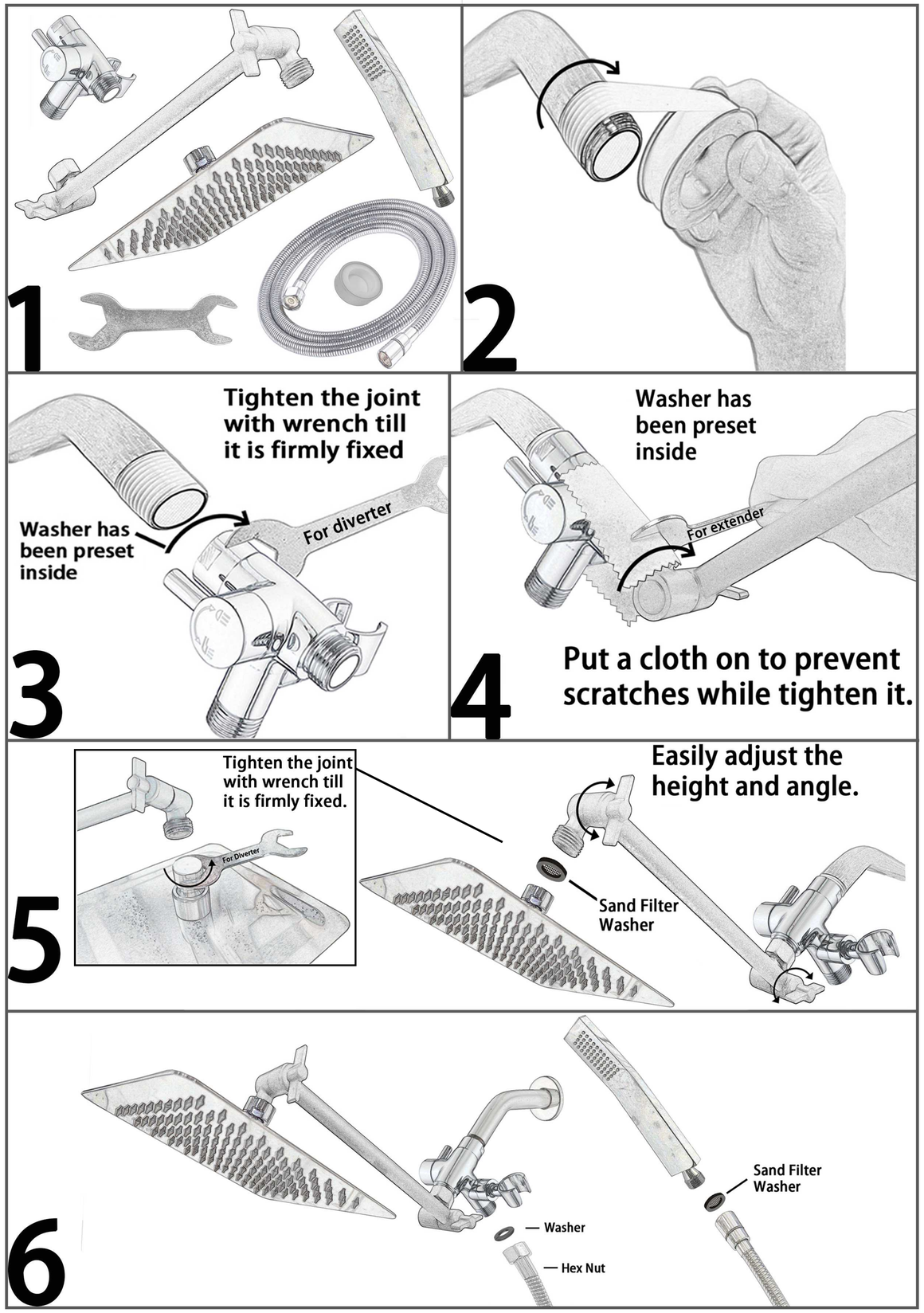

service e-mail:g-promise@vip.163.com

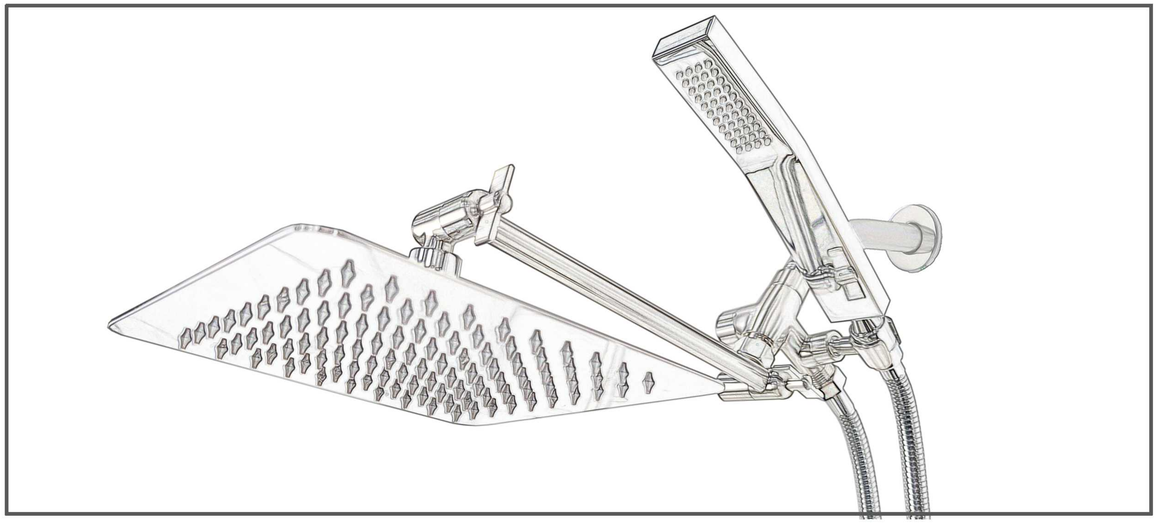

If you want a more powerful water flow,
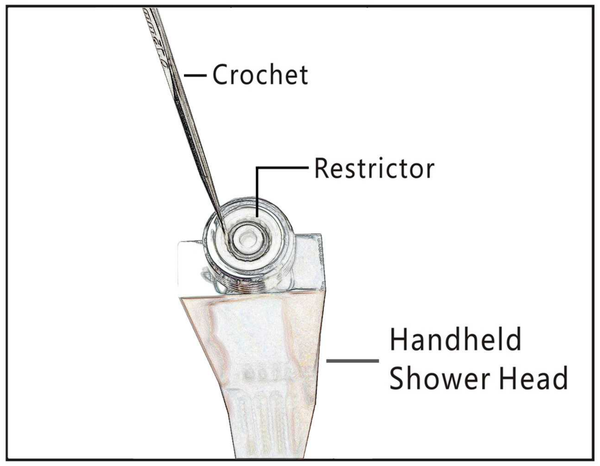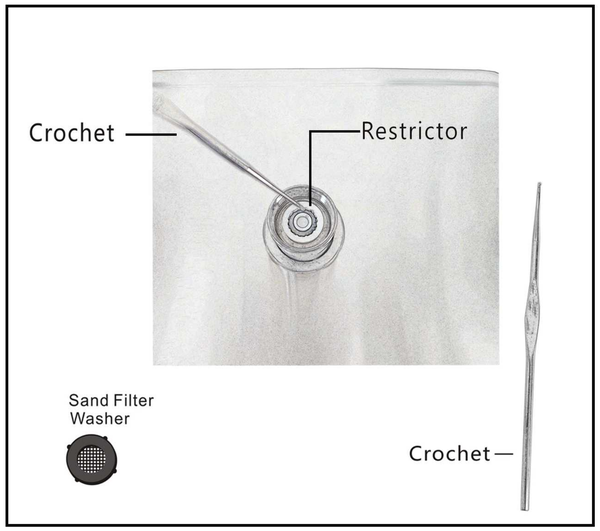
you can choose to remove the restrictor.