# DIMENSIONS



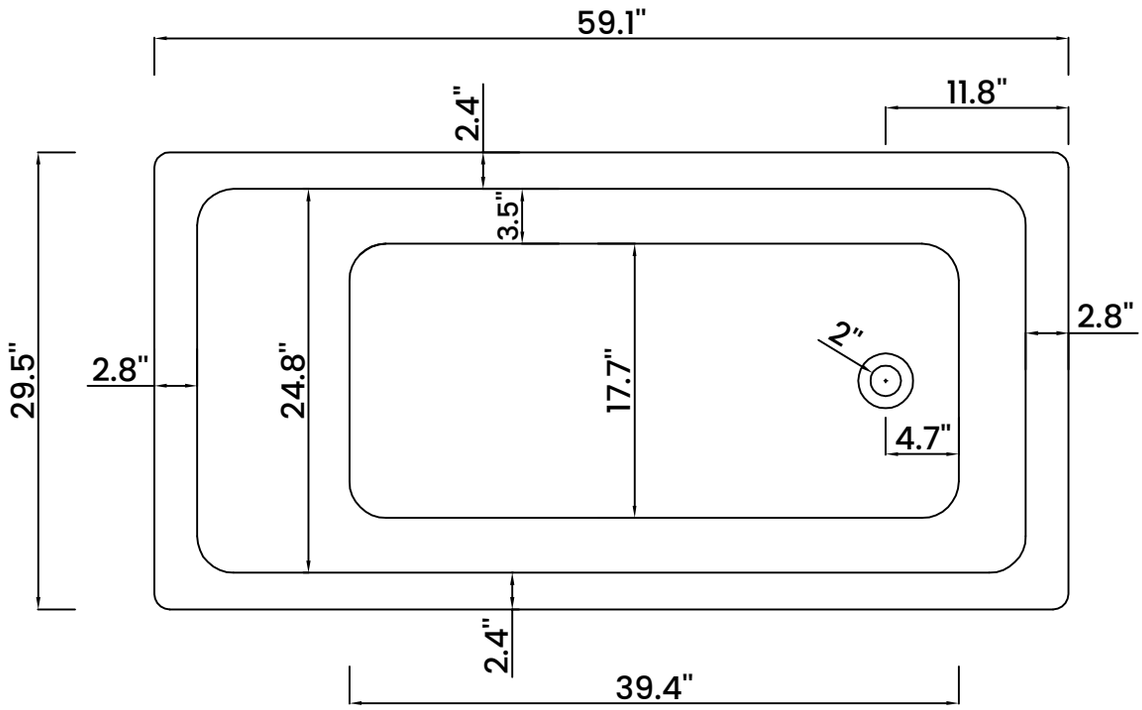
59.1"
11.8"
2.4"
3.5"
29.5"
2.8"
24.8"
17.7"
2"
2.8"
4.7"
2.4"
39.4"

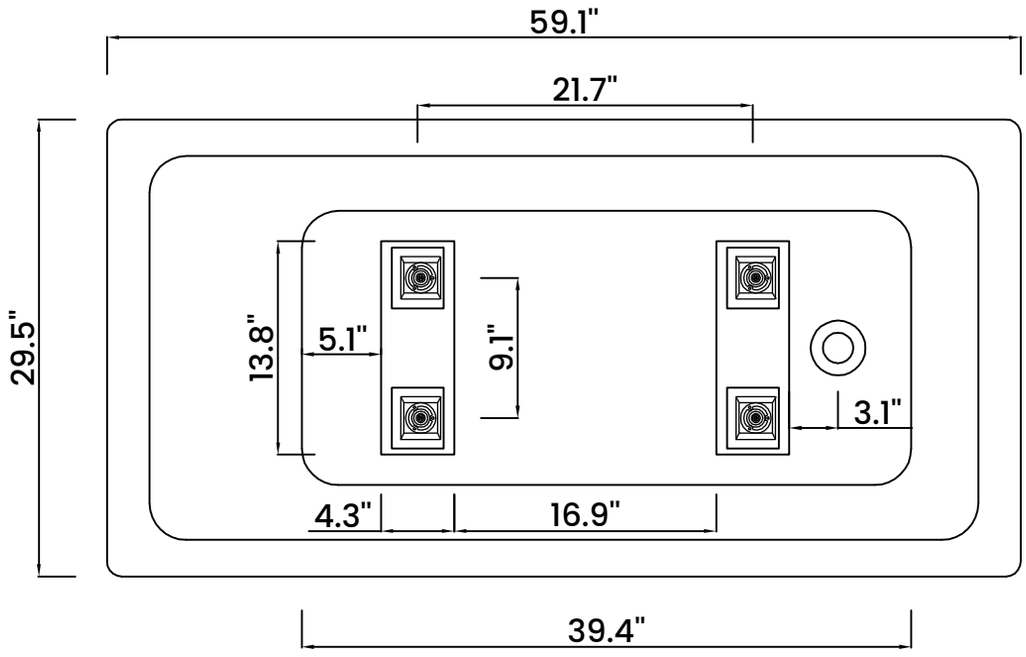
59.1"
21.7"
29.5"
13.8"
5.1"
9.1"
3.1"
4.3"
16.9"
39.4"

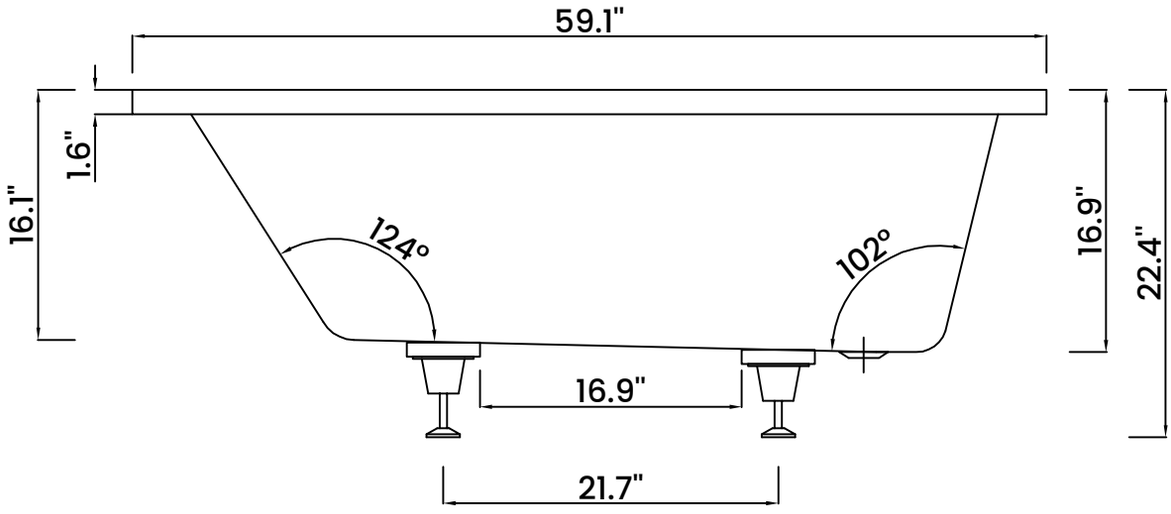
59.1"
1.6"
16.1"
124°
102°
16.9"
22.4"
16.9"
21.7"

# DIMENSIONS



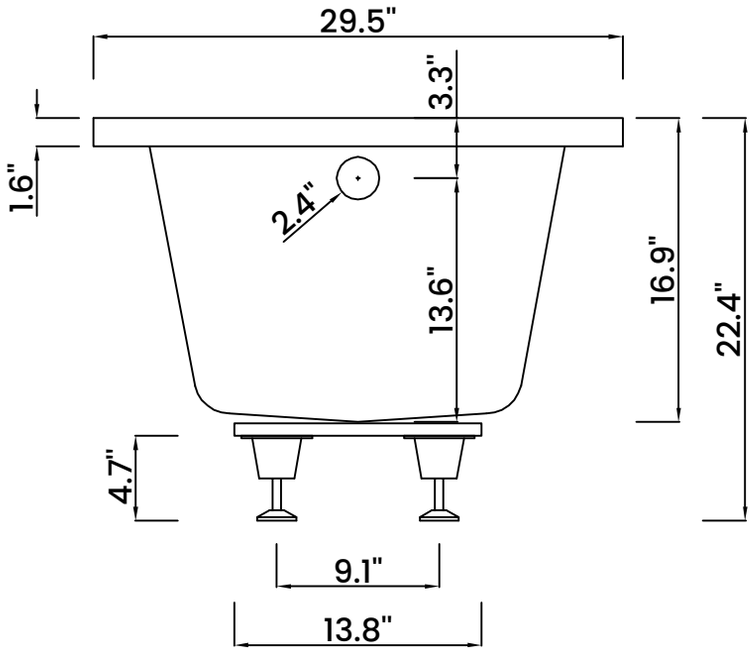
29.5"
3.3"
1.6"
2.4"
13.6"
16.9"
22.4"
4.7"
9.1"
13.8"

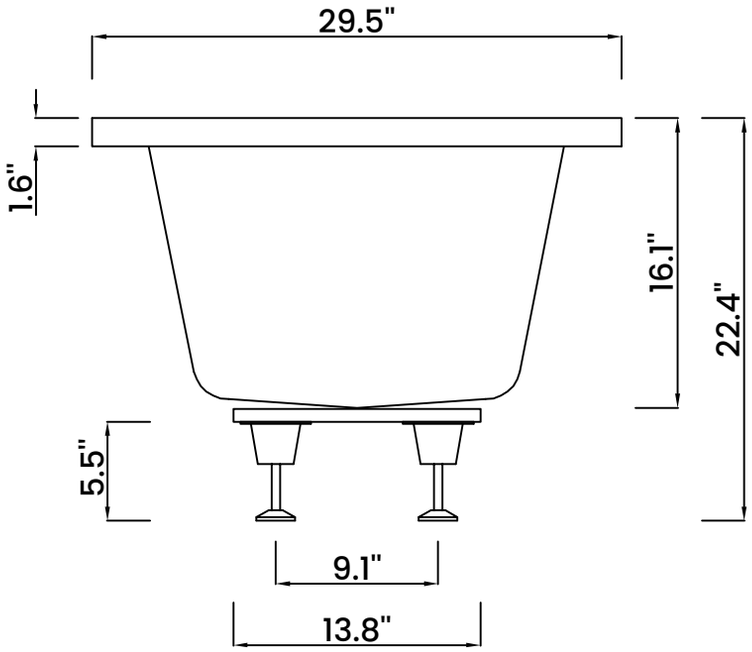
29.5"
1.6"
16.1"
22.4"
5.5"
9.1"
13.8"

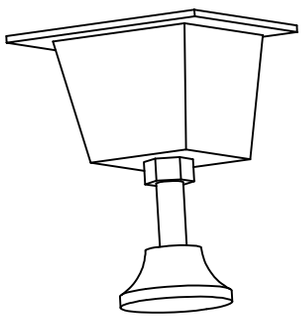

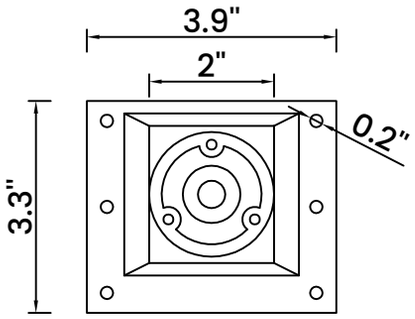
3.9"
2"
0.2"
3.3"

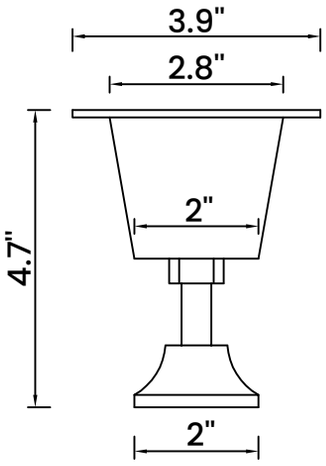
3.9"
2.8"
2"
4.7"
2"

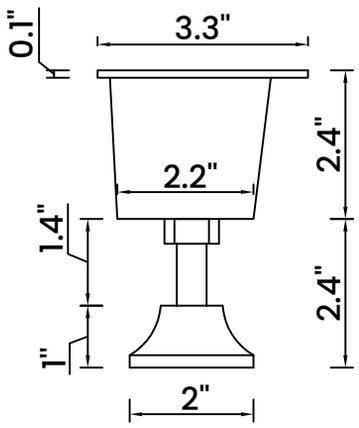
0.1"
3.3"
2.2"
2.4"
1.4"
2.4"
1"
2"