L-Shaped Corner Bench

Assembly Instruction - Please keep properly for future reference.

If you find any missing boxes, damaged parts, or accessory shortages, please contact the customer service team of your purchasing channel immediately. We will resolve the issue as quickly as possible.

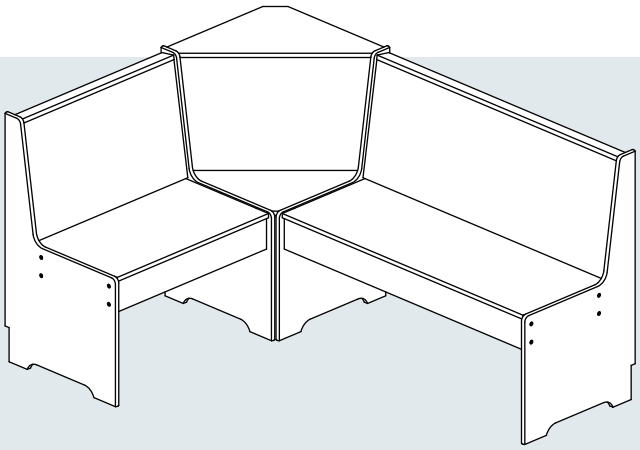

RIGHT SIDE INSTALLATION

OR

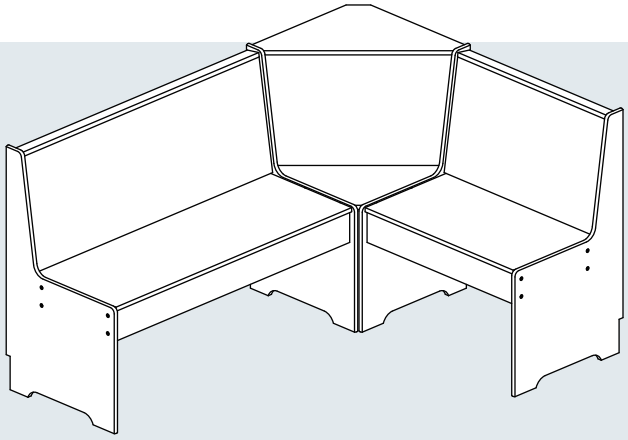

LEFT SIDE INSTALLATION

Dimensions

Width-63.8 inch
Depth-48 inch
Height-34.2 inch

EN

CONTACT US

- **Email: service@grandtunnel.com**
  In order to receive assistance more quickly, please provide

THE FOLLOWING INFORMATION:

- Order number
- Purchase platform
- Purchase date
- Detailed description of the issue along with photos (if applicable)

Important – Please read these instructions carefully before starting the installation.

Safety and Care Advice

Important – Please read these instructions fully before starting assembly

- Check you have all the components and tools listed on the following pages.
- Remove all fittings from the plastic bags and separate them into their groups.
- Keep children and animals away from the work area, small parts could choke if swallowed.
- Make sure you have enough space to layout the parts before starting.
- During assembly do not stand or put weight on the product, this could cause damage.
- Assemble the item as close to its final position (in the same room) as possible.
- Assemble on a soft level surface to avoid damaging the unit or your floor.
- Parts of the assembly will be easier with 2 people.

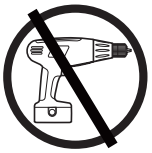

- To reduce the likelihood of damaging your product please ensure that your power drill is set on a low torque setting.

Care and maintenance

- Only clean using a damp cloth and mild detergent, do no use bleach or abrasive cleaners.
- From time to time check that there are no loose screws on this unit.
- This product should not be discarded with household waste. Take to your local authority waste disposal centre.

Handy Hints

- Assemble all parts and bolts loosely during assembly, only once the product is comKlete should you fully tighten the bolts
- Regularly check and ensure that all bolts and fittings are tightend properly .

WARNING
In order to help prevent overturning – please follow these instructions

To help prevent product toppling over please follow the below steps:-

Use the anti tip stap or wall fixing method provided (if applicable)
Do not allow children to climb or hang on the furniture
Do not open more than one drawer at a time
Do not place heavy items in the top drawers
Do not place heavy items on top of the furniture, unless the furniture has been designed for this purpose

Please note that only the anti tip strap is provided.
You will need to provide wall plugs and screws applicable for your wall type

CUSTOMER SERVICE GUIDE

Thank you for choosing our product! We are committed to providing you with excellent service. If you find any missing parts, damaged packaging, or product damage after receiving all packages, please follow the steps below to quickly contact our customer service team. We will do our best to resolve your issue.

1. Missing Parts

Verify Parts:

1. Refer to the “Parts List” in the manual to verify the name, specifications, and quantity of the missing parts.
2. Take a clear photo of the parts list and mark the missing parts with detailed information, e.g., “Missing 5 pieces of M6x30mm screws.”

Contact Us:

· By Email:
Send an email to service@grandtunnel.com, with the subject line “Missing Parts Issue.” Include the following in the email:
· A description of the missing parts and a photo of the parts list.
· Order details (order number, purchase platform, purchase date).

2. Product or Packaging Damage

If it affects normal use:

Steps:

1. Take clear photos or videos showing the damaged parts and the extent of the damage (multi-angle shots are recommended).
2. Email the photos/videos along with other details to service@grandtunnel.com, with the subject line “Product Damage Issue.”

Resolution:

After verification, we will arrange for a replacement part, product exchange, or refund as quickly as possible.

If it does not affect normal use:

Steps:

1. Contact our customer service team (by email: service@grandtunnel.com).
2. Provide a description of the damage and include relevant photos or videos.

Resolution:

We will provide repair guidance or an appropriate compensation plan based on the specific situation.

Contact Us:

· Customer Service Email: service@grandtunnel.com

Helpful Tips

To process your issue efficiently, please prepare the following information:
· Order details (order number, purchase platform, purchase date).
· Clear photos or videos.
· We are committed to providing quick and professional solutions, no matter the size of the issue, to ensure your satisfaction.
Thank you for your trust and support! We hope you enjoy using our product!

Parts List - Fittings

Please check you have all the fittings listed below

Note: The quantities below are the correct amount to complete the assembly. In some cases more fittings may be supplied are required.

A  6*30mm Wooden Dowel x 37	B 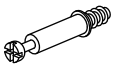 6*35mm Cam Bolt x 47	C  Cam Lock x 47
D  6*20mm Wooden Dowel x 8	E 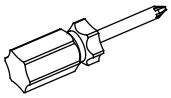 x 1	F 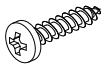 4*20mm Screw x 8
G 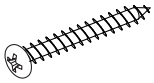 4*40mm Screw x 10	H  4*12mm Screw x 48	I  x 8
K  5*40mm Screw x 6	M 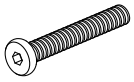 6*50mm Bolt x 16	N  x 16
O 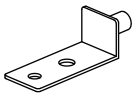 x 4	P 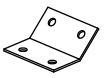 x 4	Q 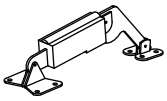 x 3
S 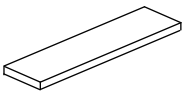 x 8	U  x 1 M4	

Tools required



Phllips screwdriver
(medium & large)

Ruler - Use this ruler to help correctly identify the screws

mm

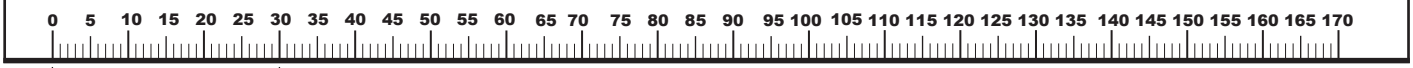



The screws length is measured from the head to the point (30mm screw shown).



Using Camlocks

Step 1

Connect the male camlock as directed in the assembly instructions using a screwdriver.

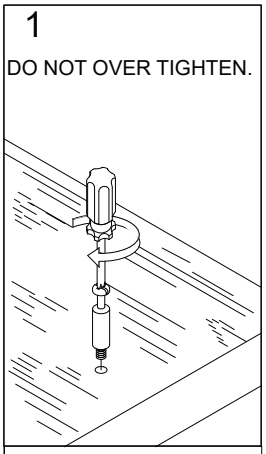

Step 2

Push the male camlock into the entry hole.

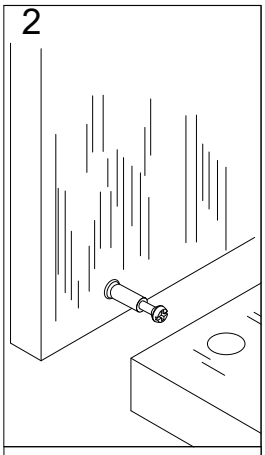

Step 3

Insert the female camlock as shown in the instructions.

Note: ensure that the arrow on the top of the camlock points towards the entry hole for the male camlock.

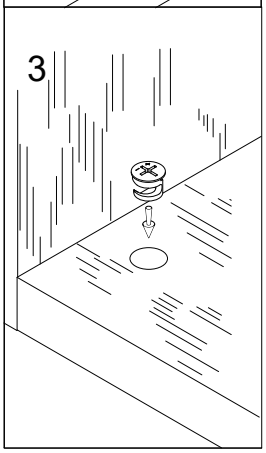

Step 4

Turn the female camlock clockwise with a screwdriver.

You should feel a click when the camlock is locked in place.

The joint is now secure.

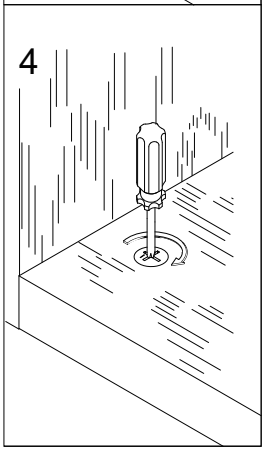

Parts List - Panels

Please check you have all the panels listed below

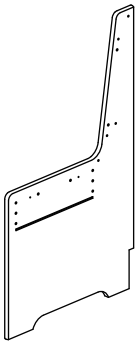

1 (870*500*15mm x1)

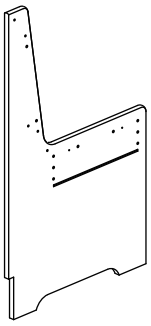

2 (870*500*15mm x1)

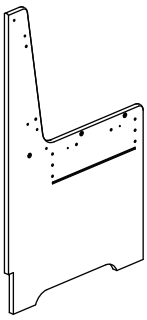

3 (870*500*15mm x1)

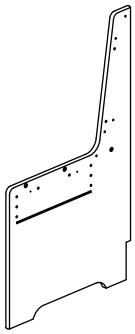

4 (870*500*15mm x1)

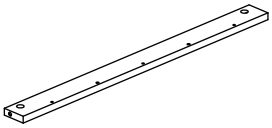

5 (688*53*12mm x1)

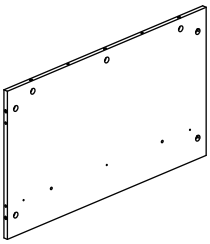

6 (688*400*12mm x1)

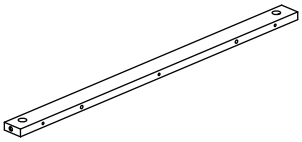

7 (688*40*15mm x1)

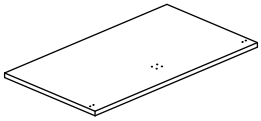

8 (682*380*12mm x1)

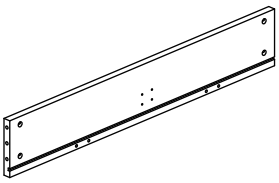

9 (688*115*15mm x2)

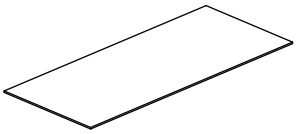

10 (696*298*4mm x1)

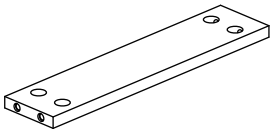

11 (290*60*12mm x4)

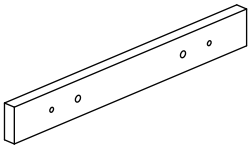

12 (283*35*12mm x4)

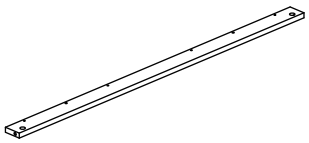

13 (1091*53*12mm x1)

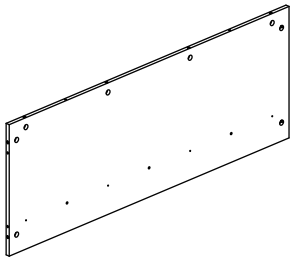

14 (1091*400*12mm x1)

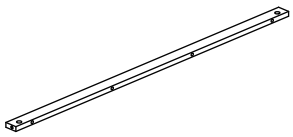

15 (1091*40*15mm x1)

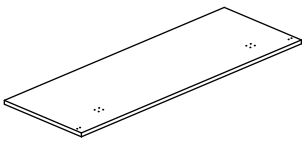

16 (1085*380*12mm x1)

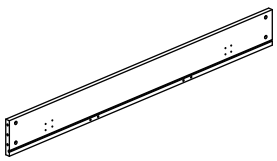

17 (1091*115*15mm x2)

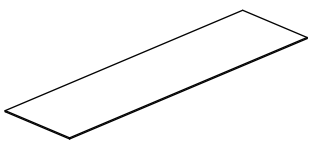

18 (1099*298*4mm x1)

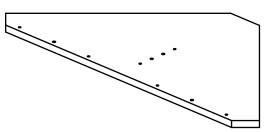

19 (500*500*12mm x1)

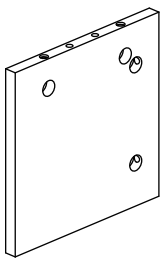

20 (180*180*12mm x1)

Parts List - Panels

Please check you have all the panels listed below

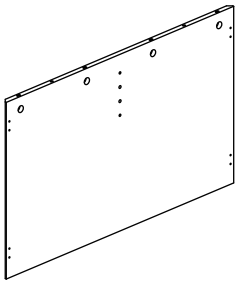

21 (660*400*12mm x1)

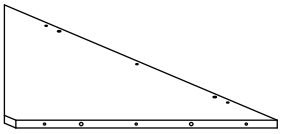

22 (476*476*15mm x1)

Assembly Instructions

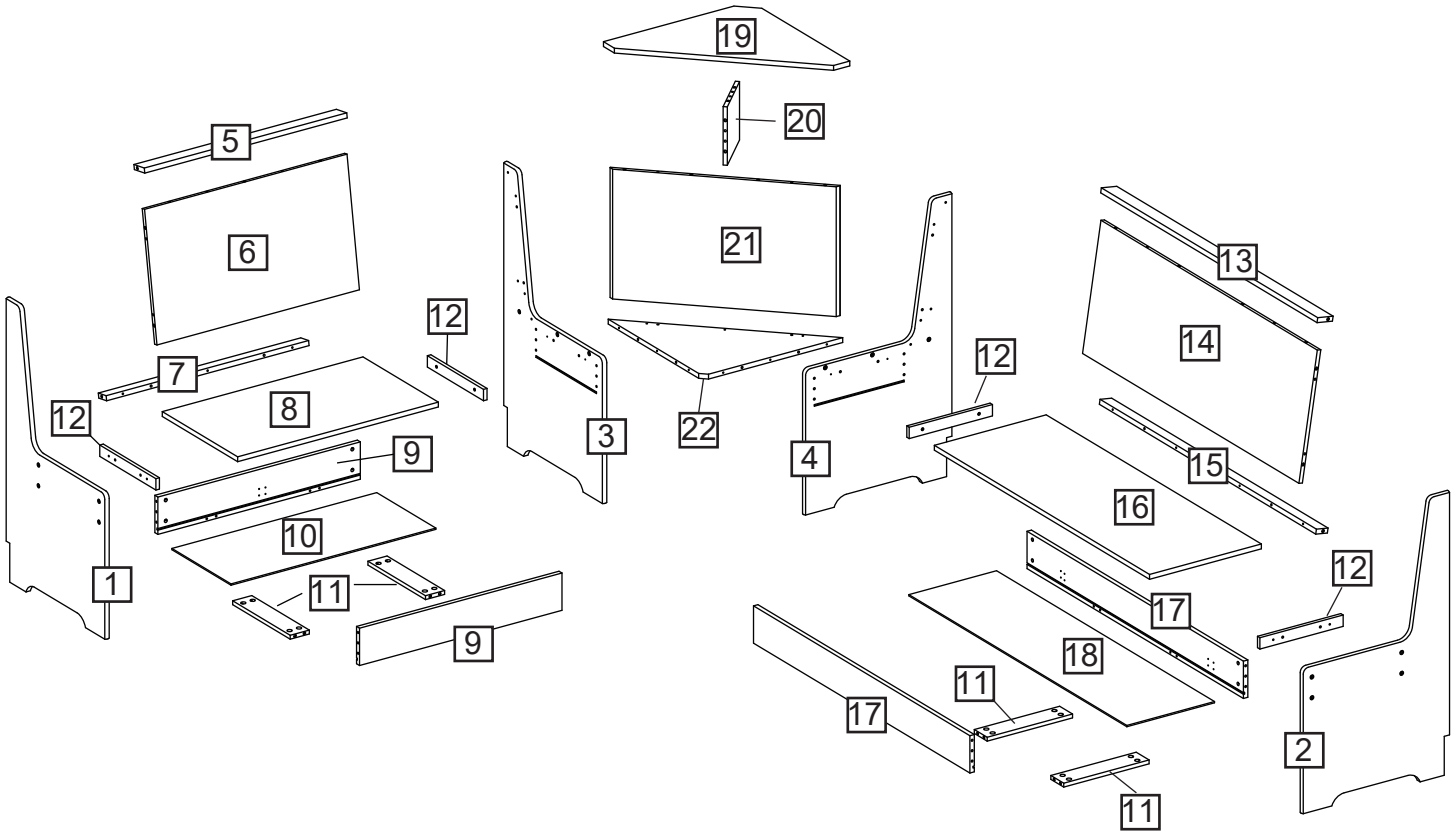

Assembly Instructions

There are two combination methods for Part A & Part B.

RIGHT SIDE INSTALLATION

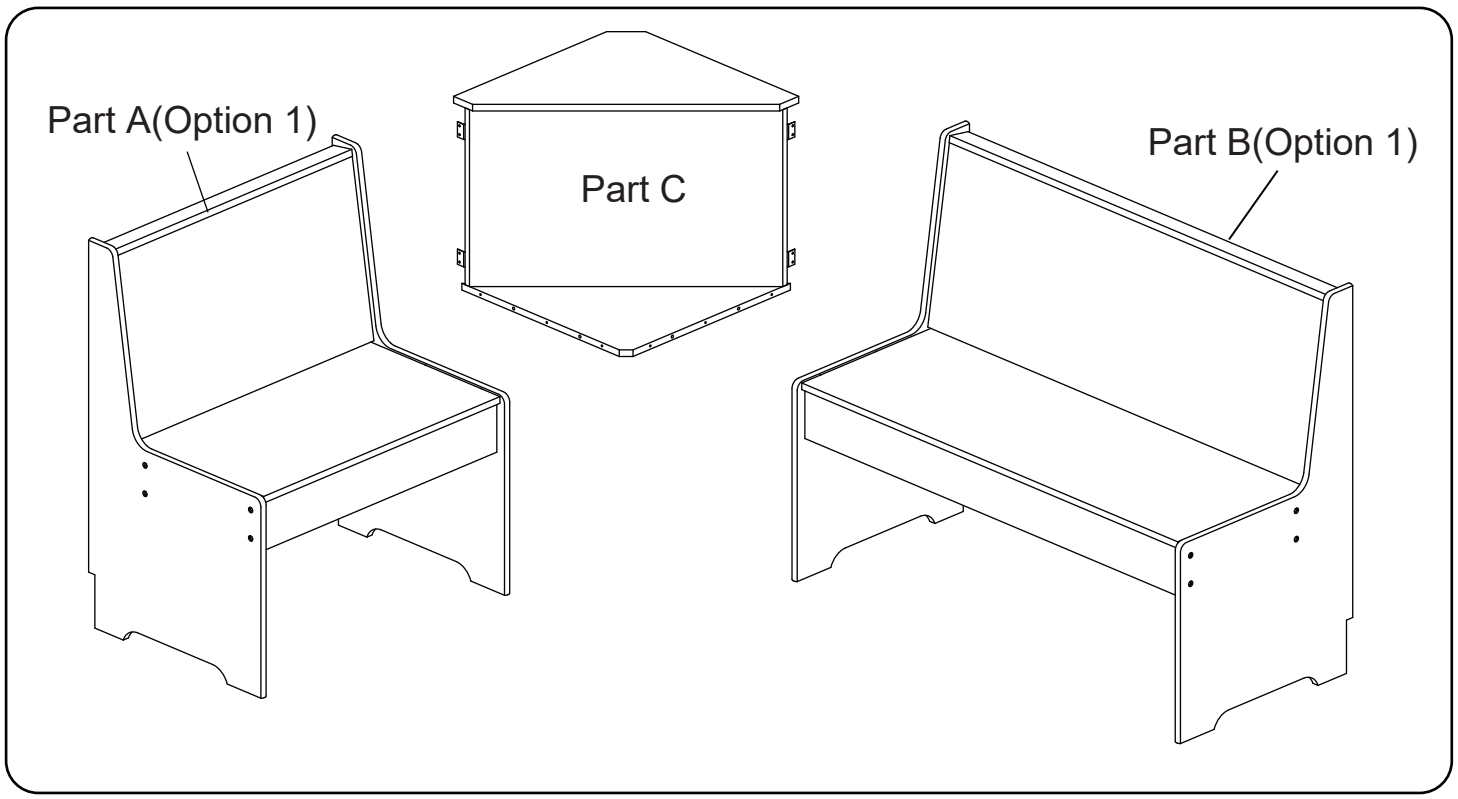

LEFT SIDE INSTALLATION

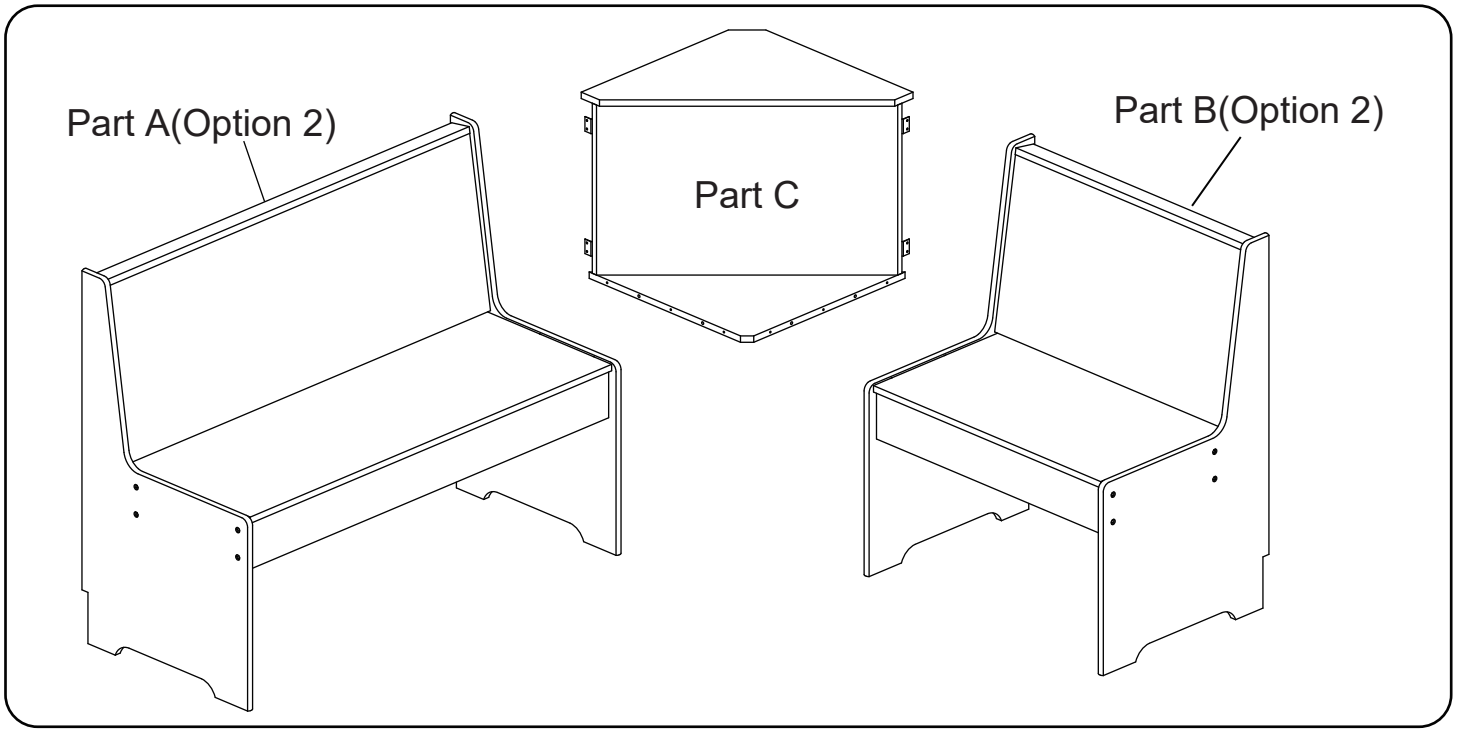

Assembly Instructions

The short chair has two combination methods: Part A (Option 1) and Part B (Option 2). Pages 9-16 show the assembly steps for Park A (Option 1). If you want to assemble Park B (Option 2), you only need to replace Board NO.1& 3 with Board NO. 4 & 2.

Part A(Option 1)

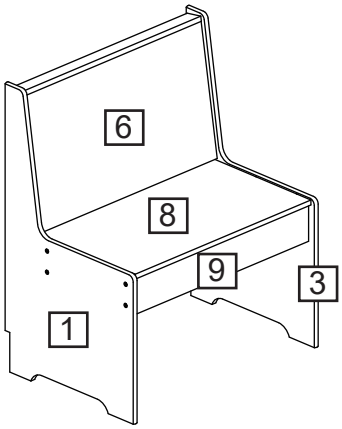

Part B(Option 2)

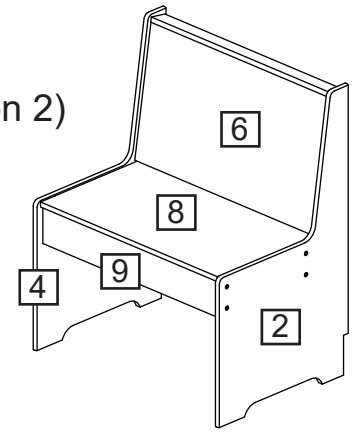

Step 1

CAM-LOCK
Tighten until shoulder is flush with panel.Do not overtighten or undertighten(see example below)

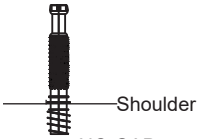

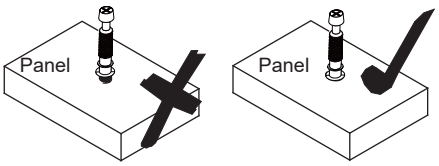

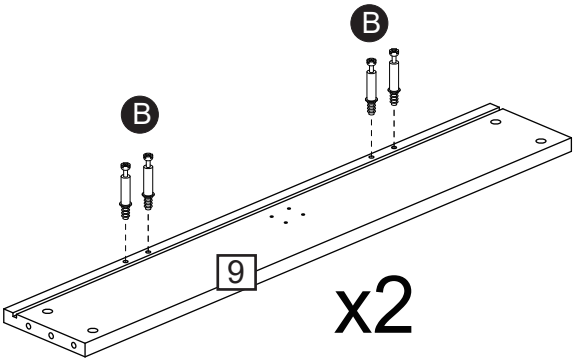

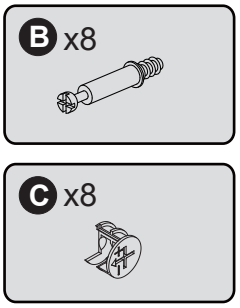

Lock cam bolt (B) into panel (9), then assemble panel (11) onto panel (9), insert cam lock (C), and tighten.

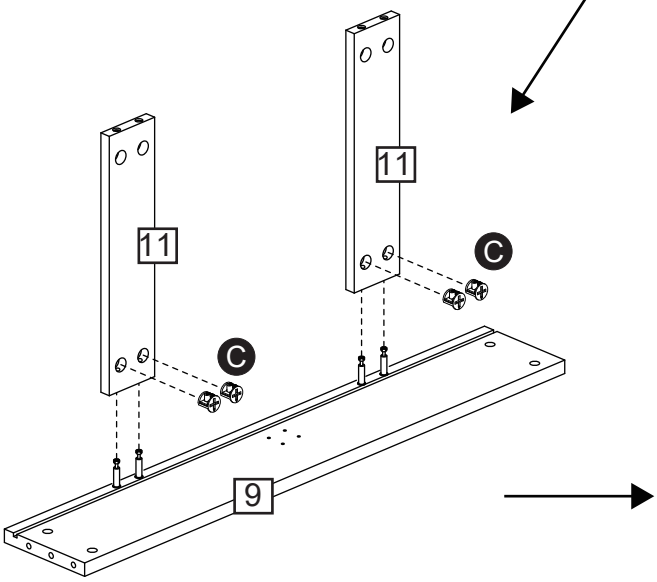

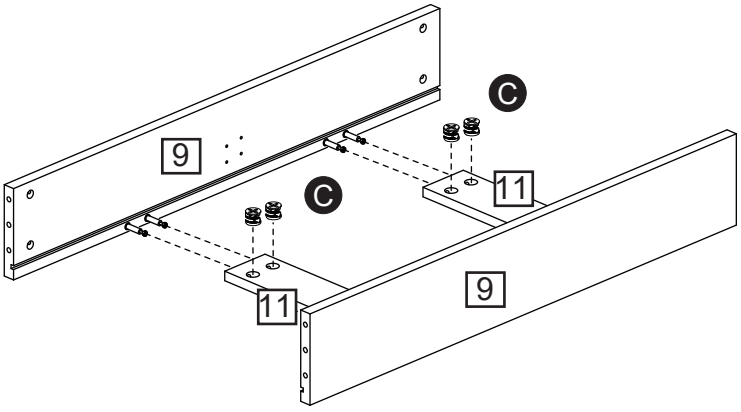

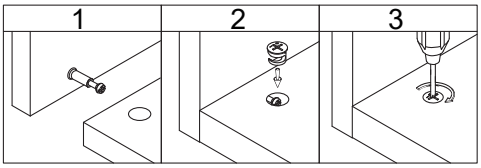

Assemble panel (9) onto panel (11), insert cam lock (C), and tighten.

Assembly Instructions

Step 2

CAM-LOCK
Tighten until shoulder is flush
with panel.Do not overtighten
or undertighten(see example below)

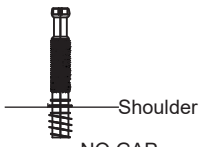

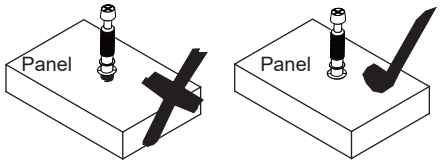

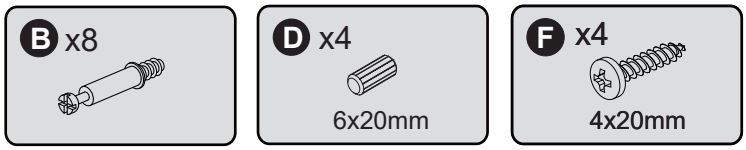

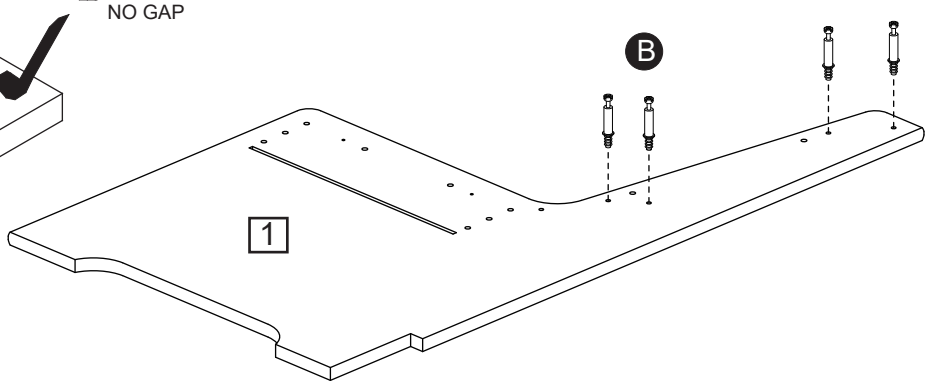

Lock cam bolt (B) into panel (1).
First, insert wooden dowel (D)
into panel (1), then use screw (F)
to attach panel (12) to panel (1).

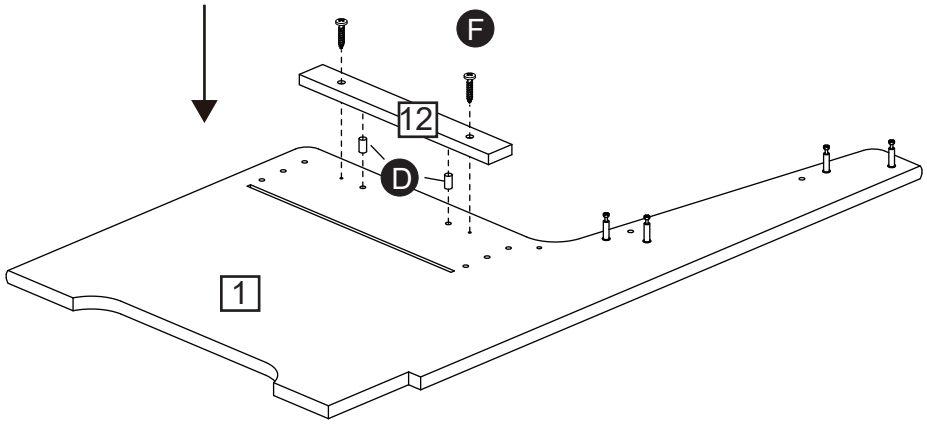

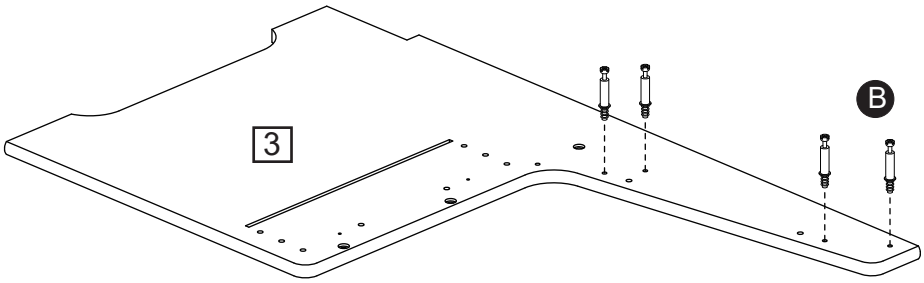

Lock cam bolt (B) into panel (3).
First, insert wooden dowel (D)
into panel (3), then use screw (F)
to attach panel (12) to panel (3).

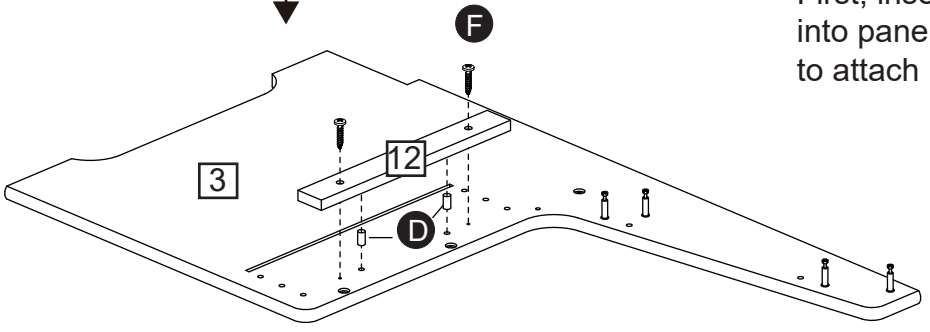

Assembly Instructions

Step 3

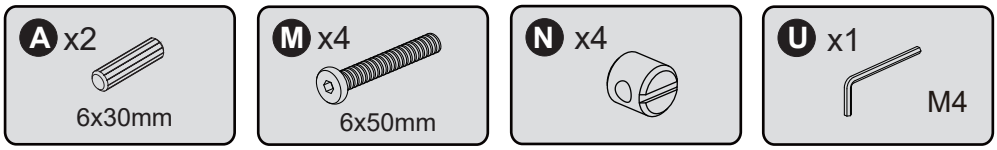

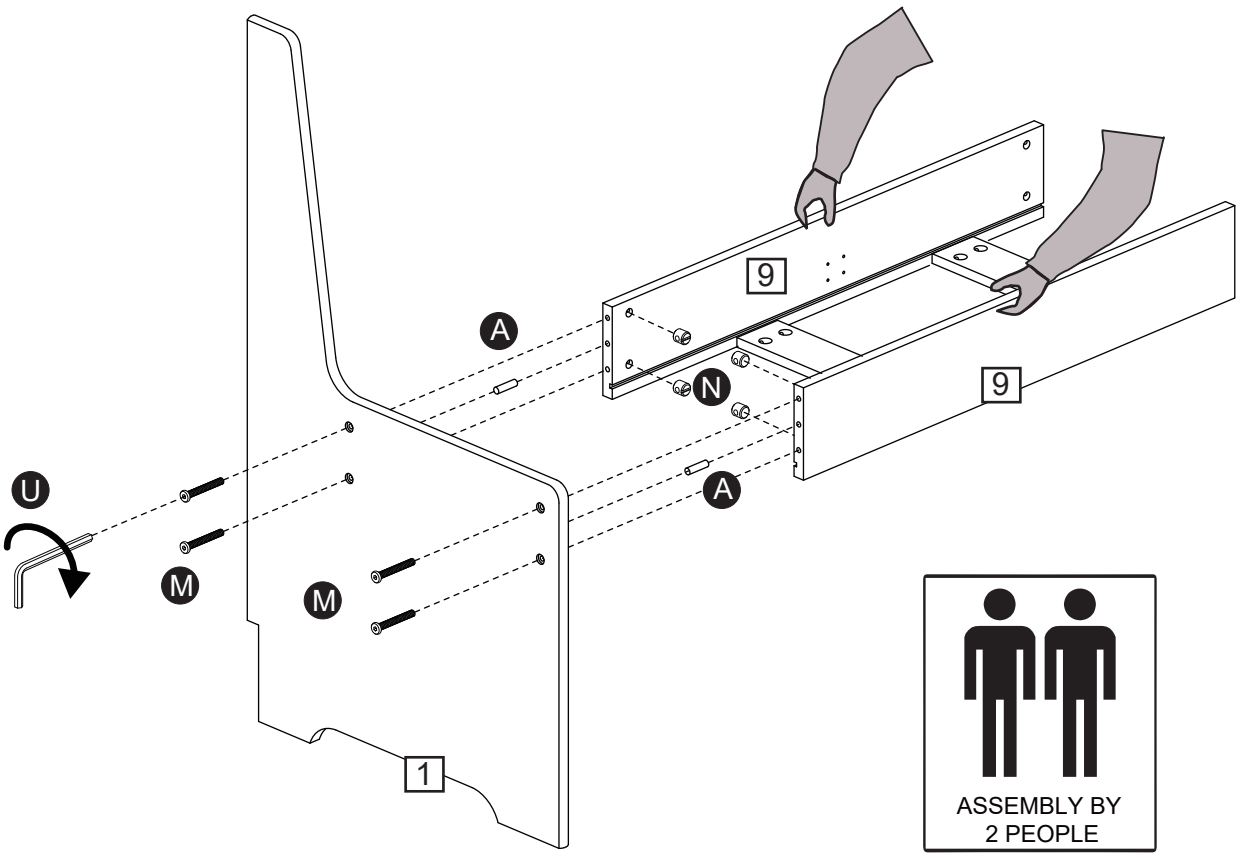

Ask someone to help hold it, use wrench (U), bolt (M), and nut (N) to assemble panel (1) onto panel (9).

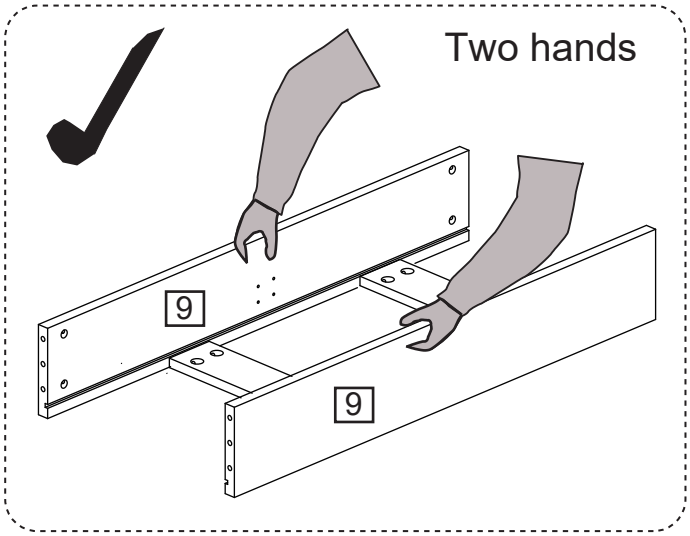

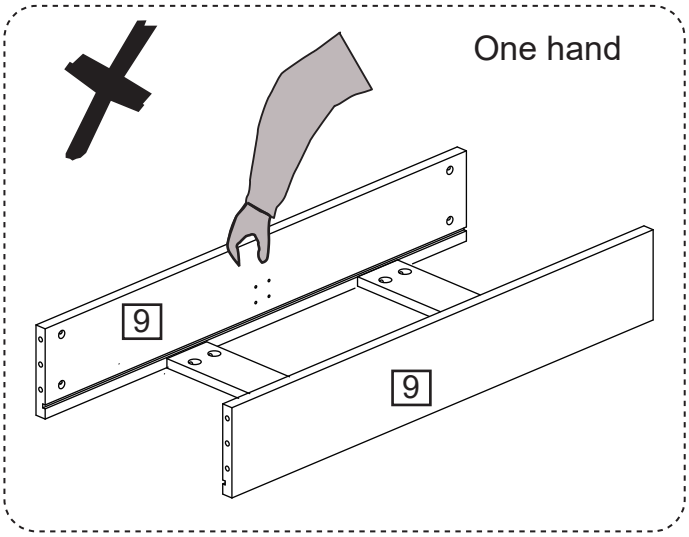

Assembly Instructions

Step 4

CAM-LOCK
Tighten until shoulder is flush with panel.Do not overtighten or undertighten(see example below)

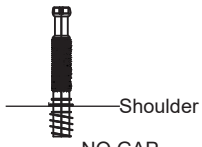

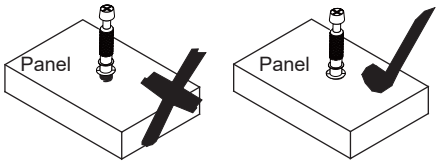

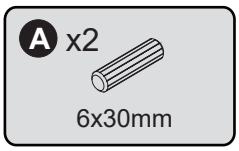

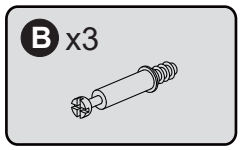

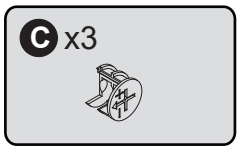

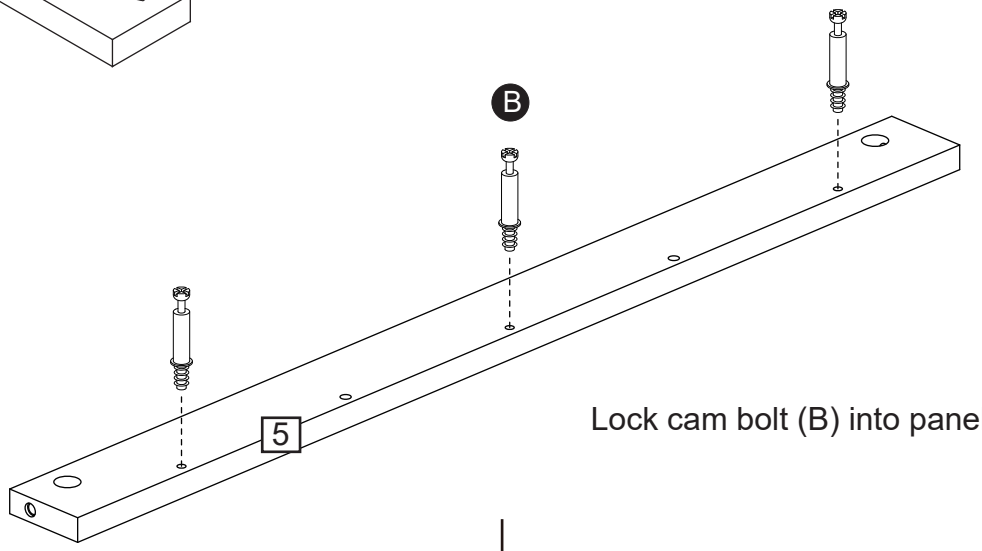

Lock cam bolt (B) into panel (5).

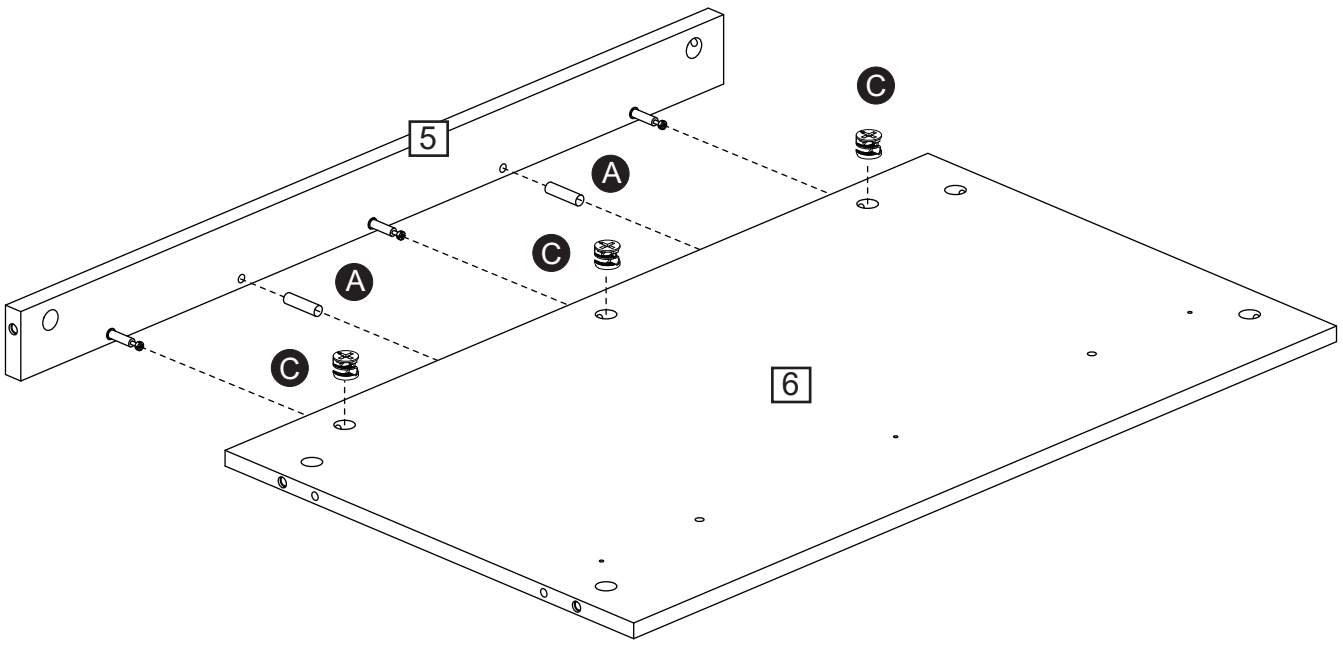

First, insert wooden dowel (A) into panel (6),
then assemble panel (5) onto panel (6).

Assembly Instructions

Step 5

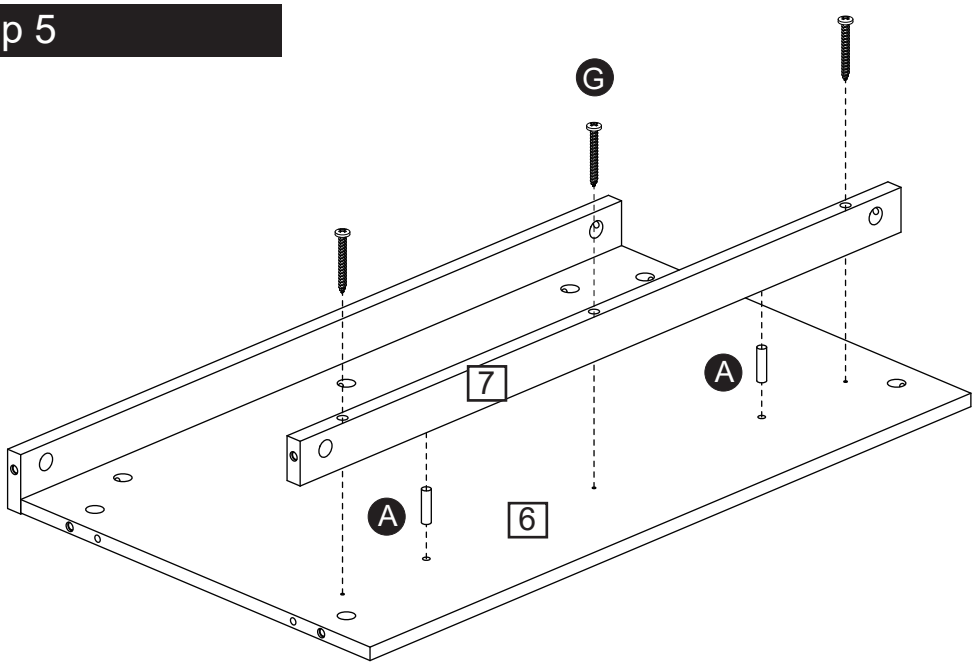

A x2
6x30mm

G x3
4x40mm

First, insert wooden dowel (A) into panel (6),
then use screw (G) to secure panel (7) to panel (6).

Step 6

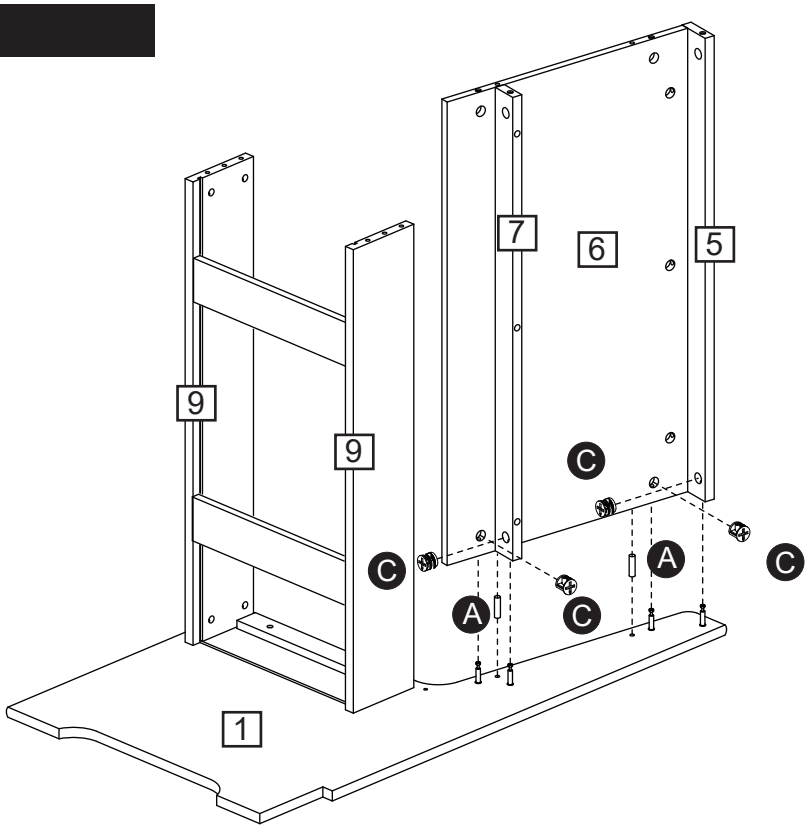

A x2
6x30mm

C x4

First, insert wooden dowel (A) into panel (1),
then assemble panels (5), (6), and (7) onto panel (1),
insert cam lock (C), and tighten.

Assembly Instructions

Step 7

A x4

6x30mm

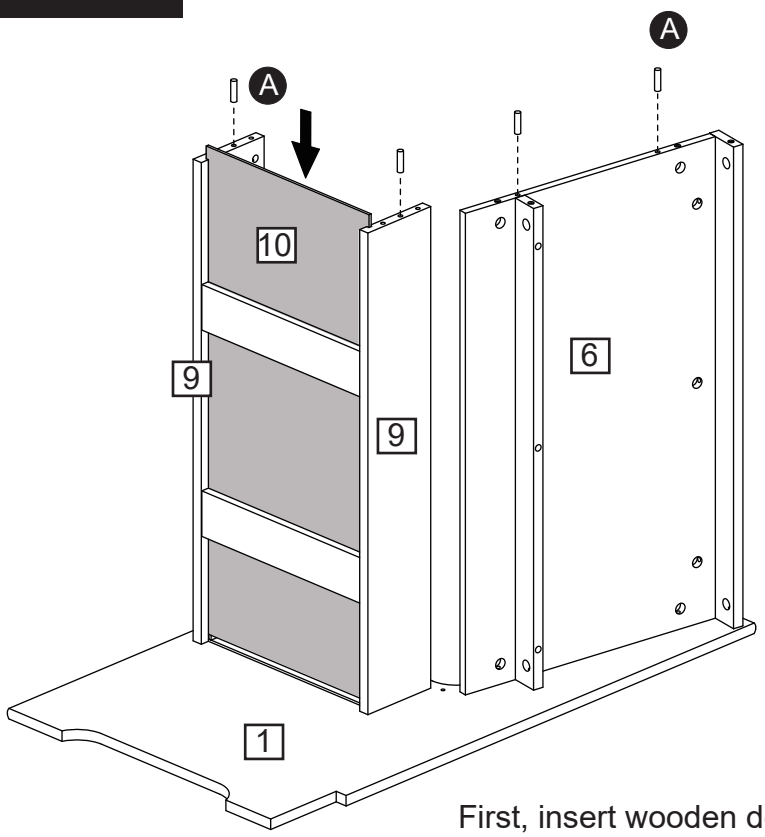

First, insert wooden dowel (A) into panels (6) and (9), then slide panel (10) into the groove of panel (9).

Step 8

H x4

4x12mm

O x2

Use screw (H) to secure part (O) to panels (8).

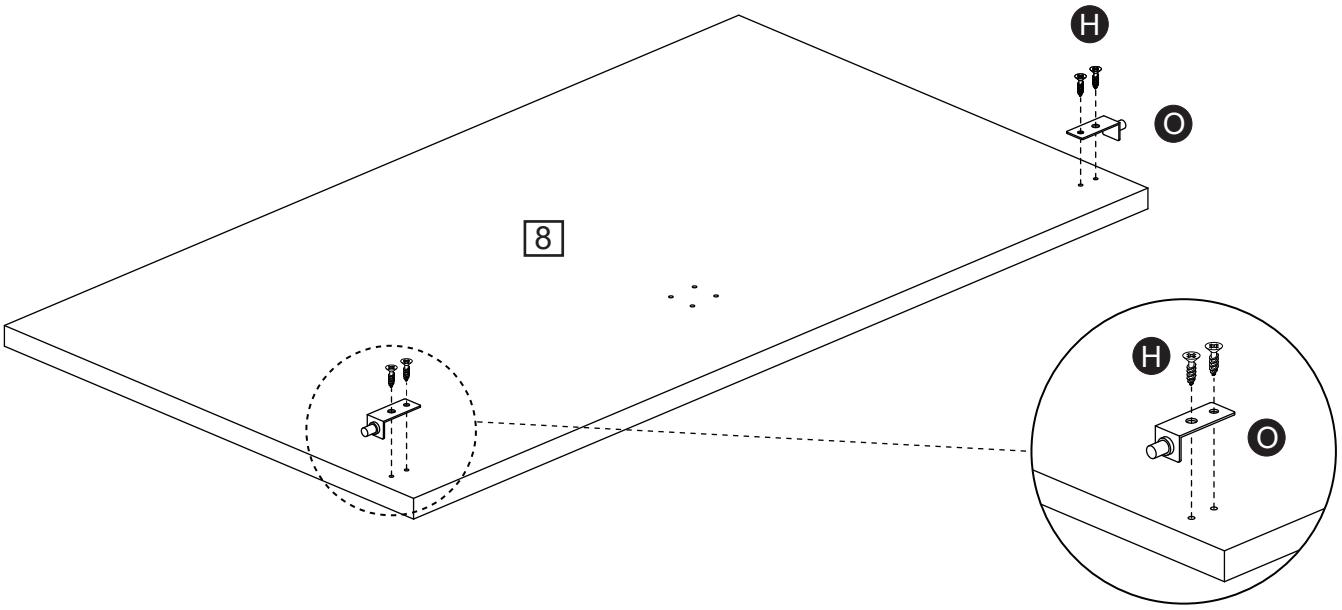

Assembly Instructions

Step 9

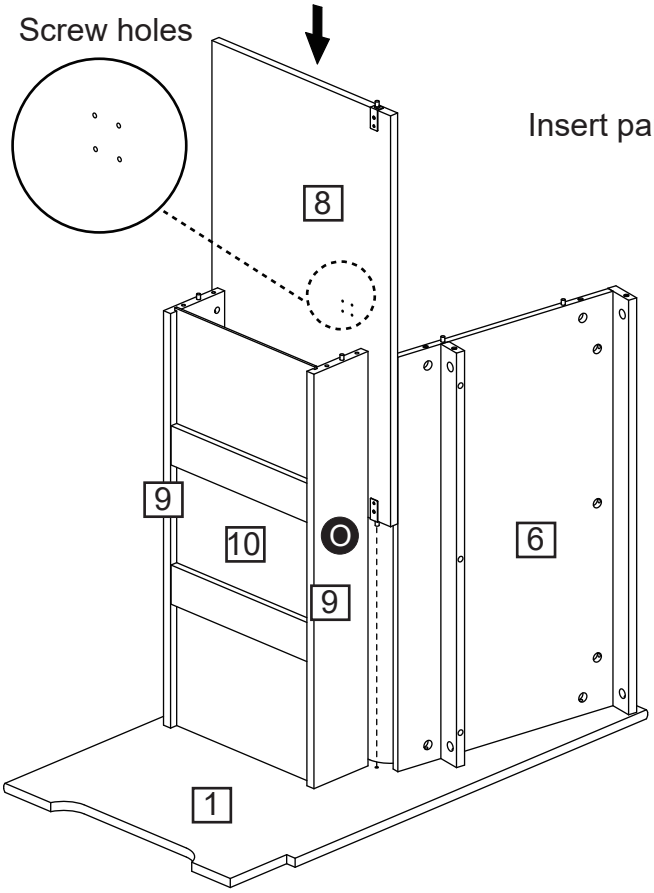

Insert part (O) into panel (1).

Step 10

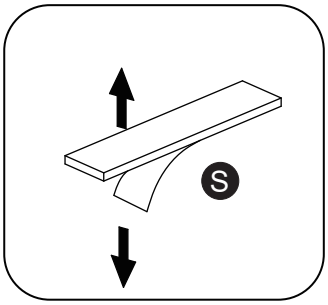

Glue part (S) onto panels (1) and (3).

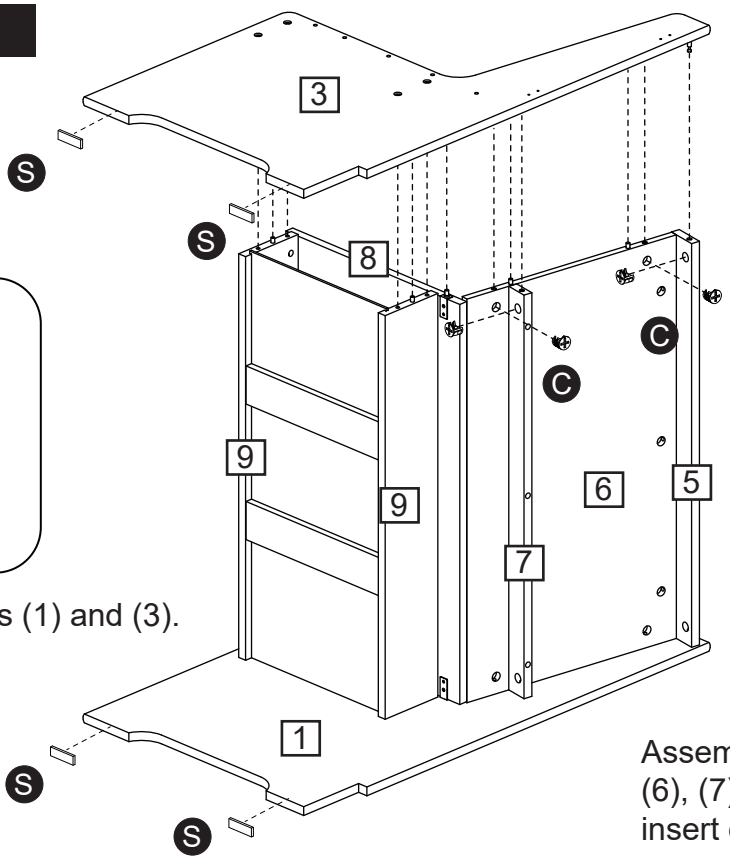

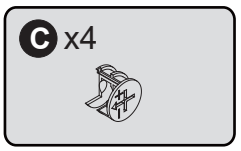

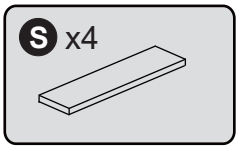

Assemble panels (3), (5), (6), (7), and (9) together, insert cam lock (C), and tighten.

Assembly Instructions

Step 11

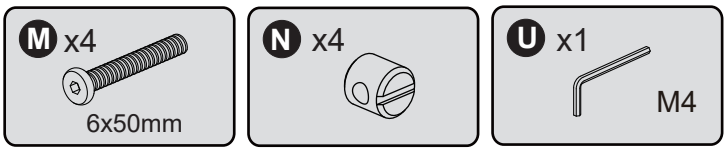

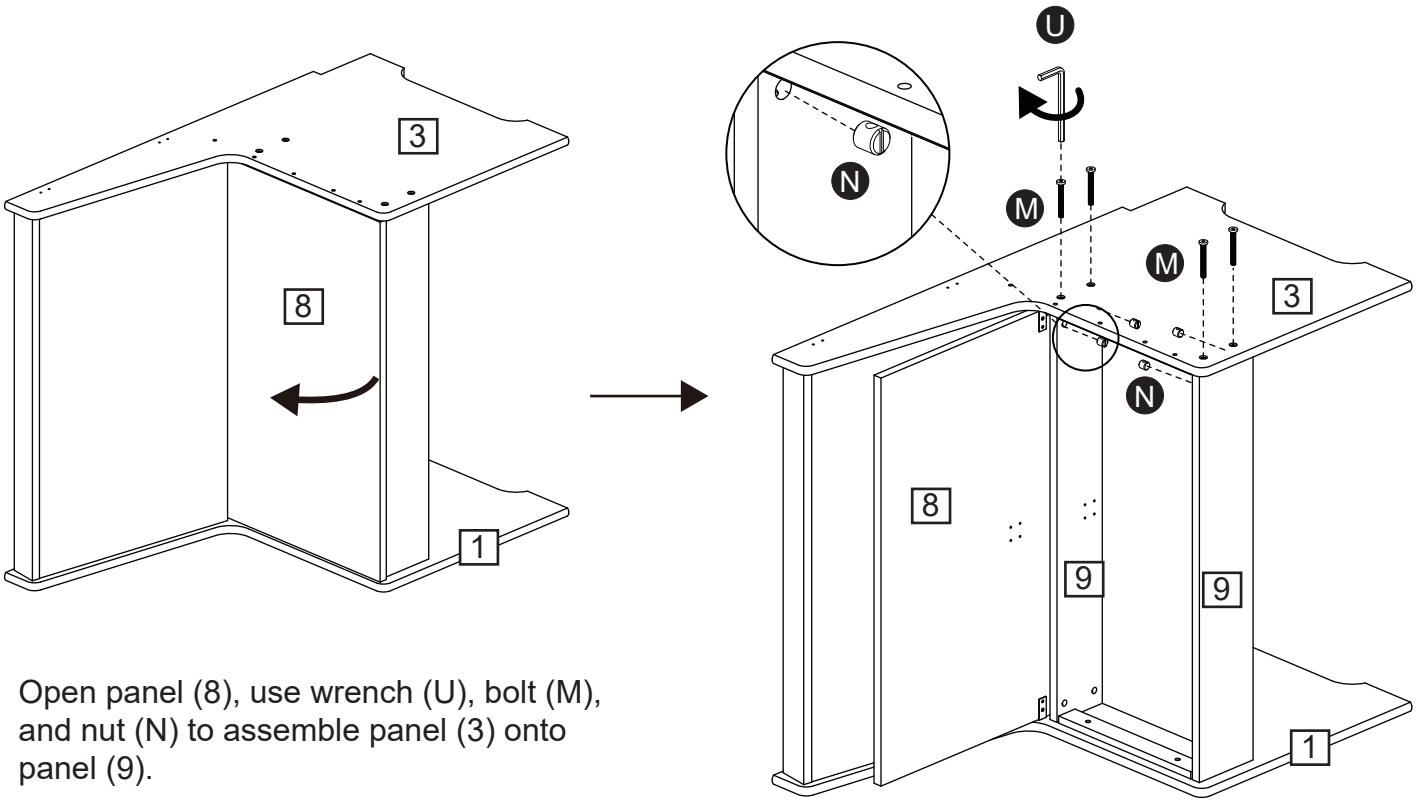

Open panel (8), use wrench (U), bolt (M), and nut (N) to assemble panel (3) onto panel (9).

Step 12

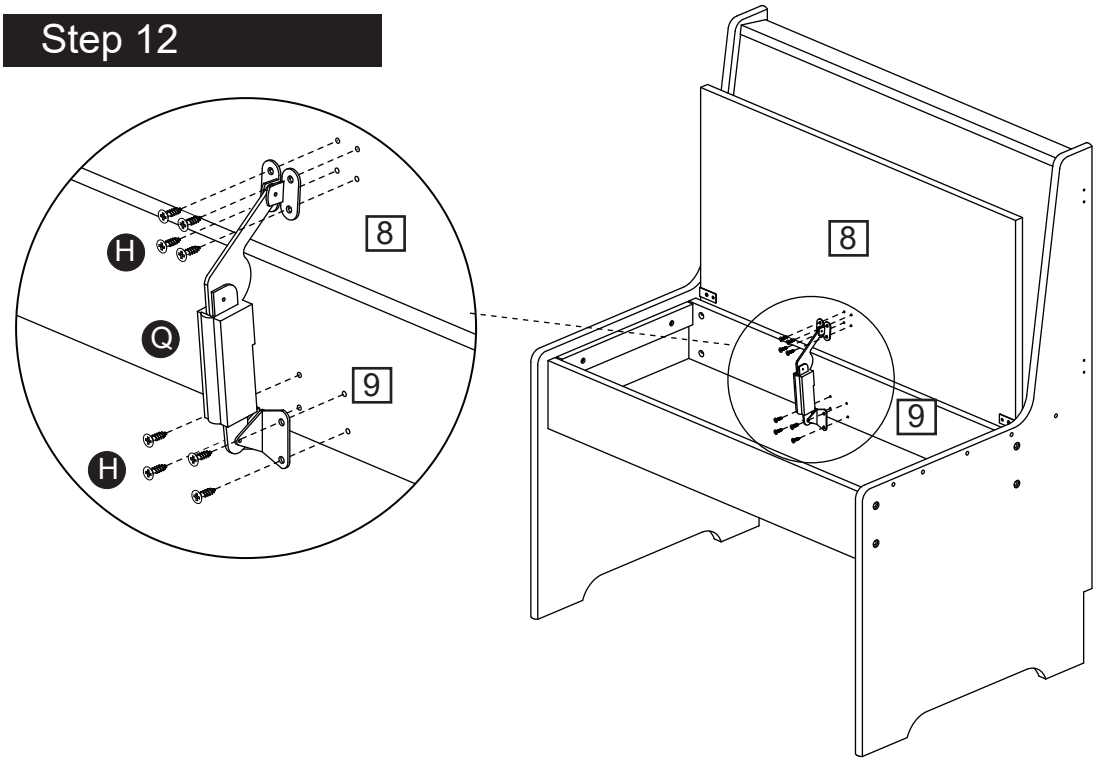

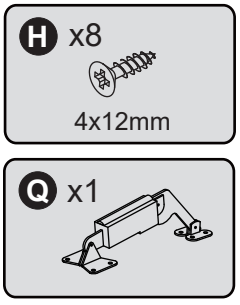

Use screw (H) to secure part (Q) to panels (8) and (9).

Assembly Instructions

The short chair has two combination methods: Part B (Option 1) and Part A (Option 2). Pages 17-25 show the assembly steps for Part B (Option 1). If you want to assemble Part A (Option 2), you only need to replace Board NO.4& 2 with Board NO. 1 & 3.

Part B(Option 1)

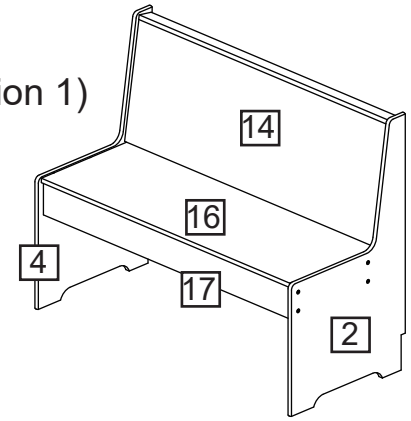

Part A(Option 2)

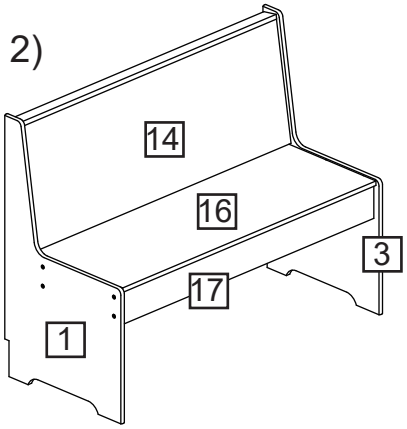

Step 13

CAM-LOCK
Tighten until shoulder is flush with panel.Do not overtighten or undertighten(see example below)

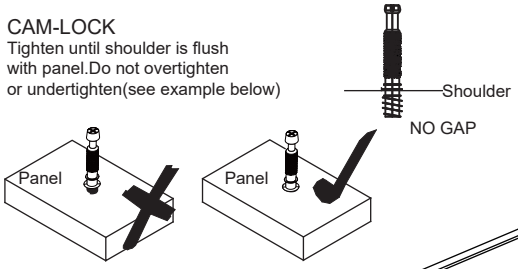

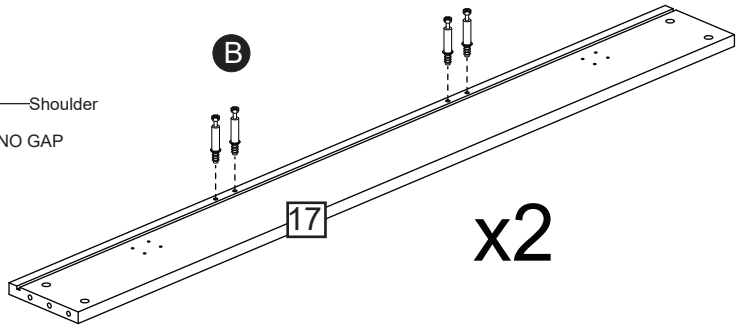

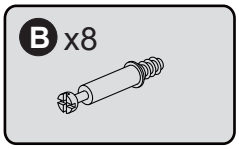

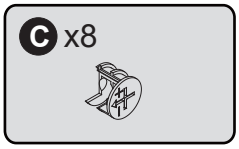

Lock cam bolt (B) into panel (17), then assemble panel (11) onto panel (17), insert cam lock (C), and tighten.

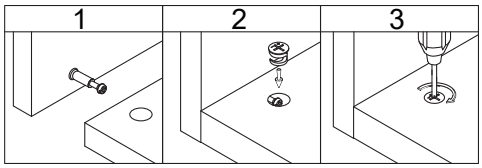

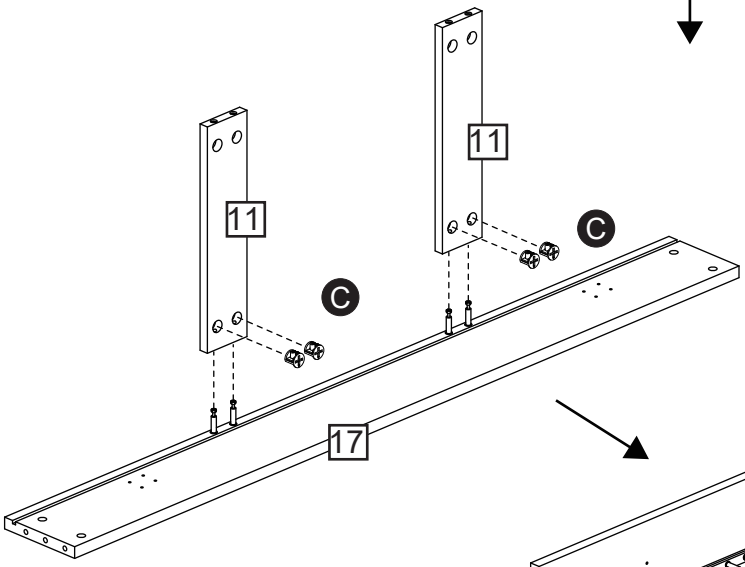

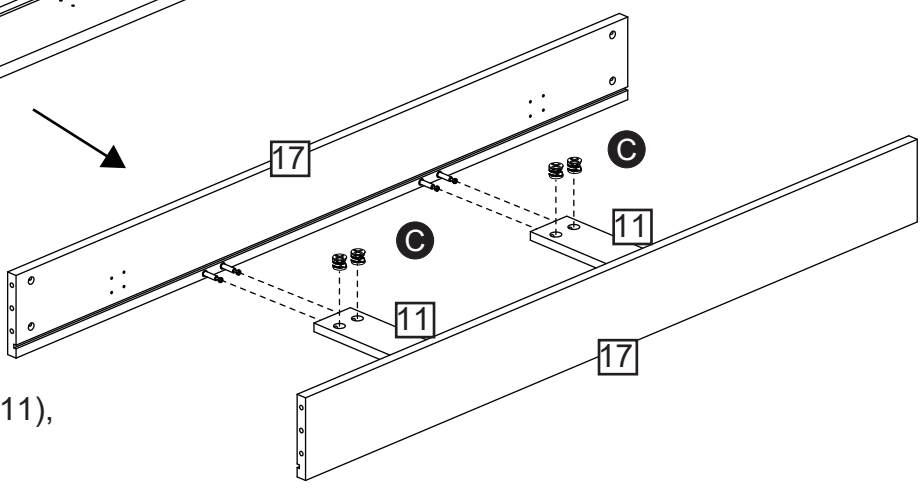

Assemble panel (17) onto panel (11), insert cam lock (C), and tighten.

Assembly Instructions

Step 14

CAM-LOCK
Tighten until shoulder is flush
with panel.Do not overtighten
or undertighten(see example below)

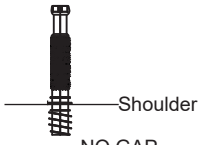

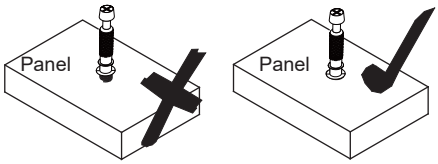

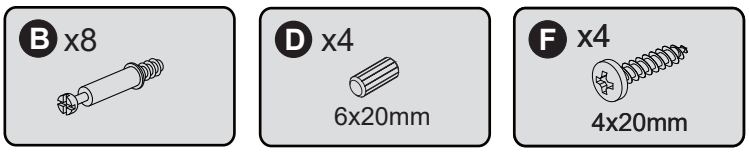

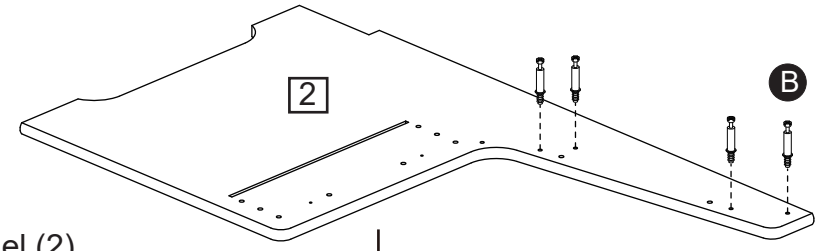

Lock cam bolt (B) into panel (2).
First, insert wooden dowel (D)
into panel (2), then use screw (F)
to assemble panel (12) onto
panel (2).

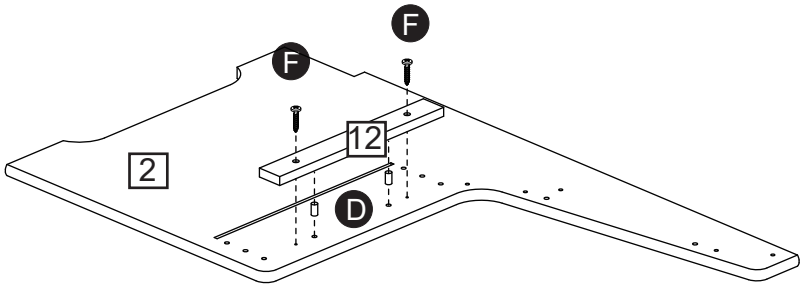

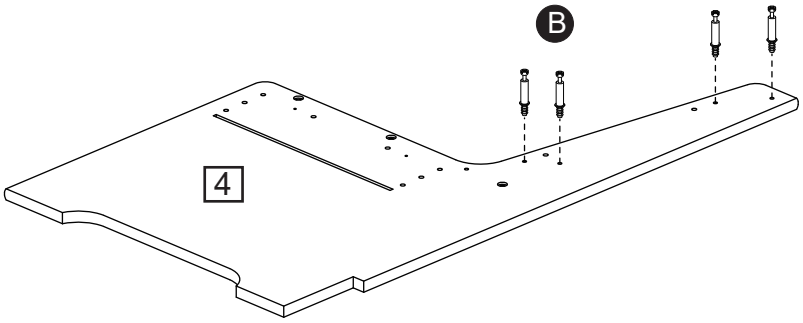

Lock cam bolt (B) into panel (4).
First, insert wooden dowel (D)
into panel (4), then use screw (F)
to assemble panel (12) onto panel (4).

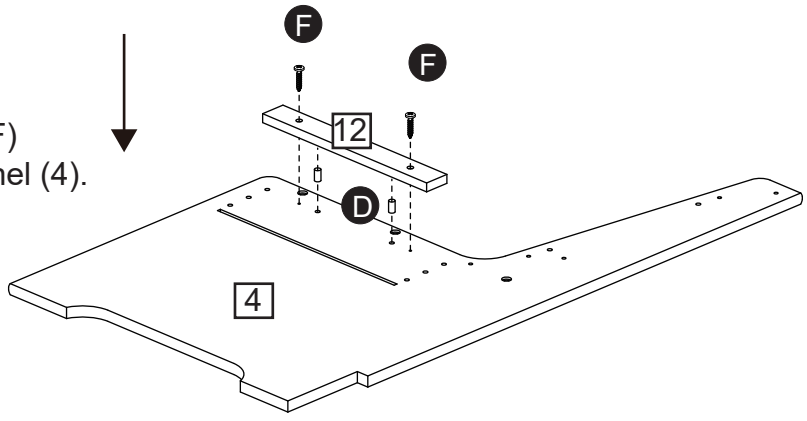

Assembly Instructions

Step 15

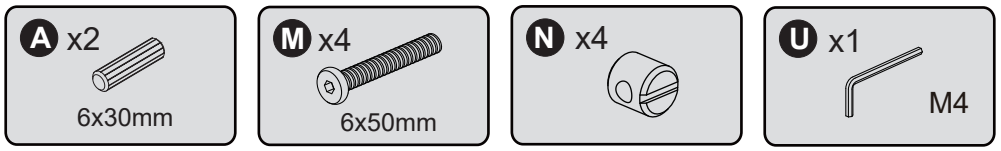

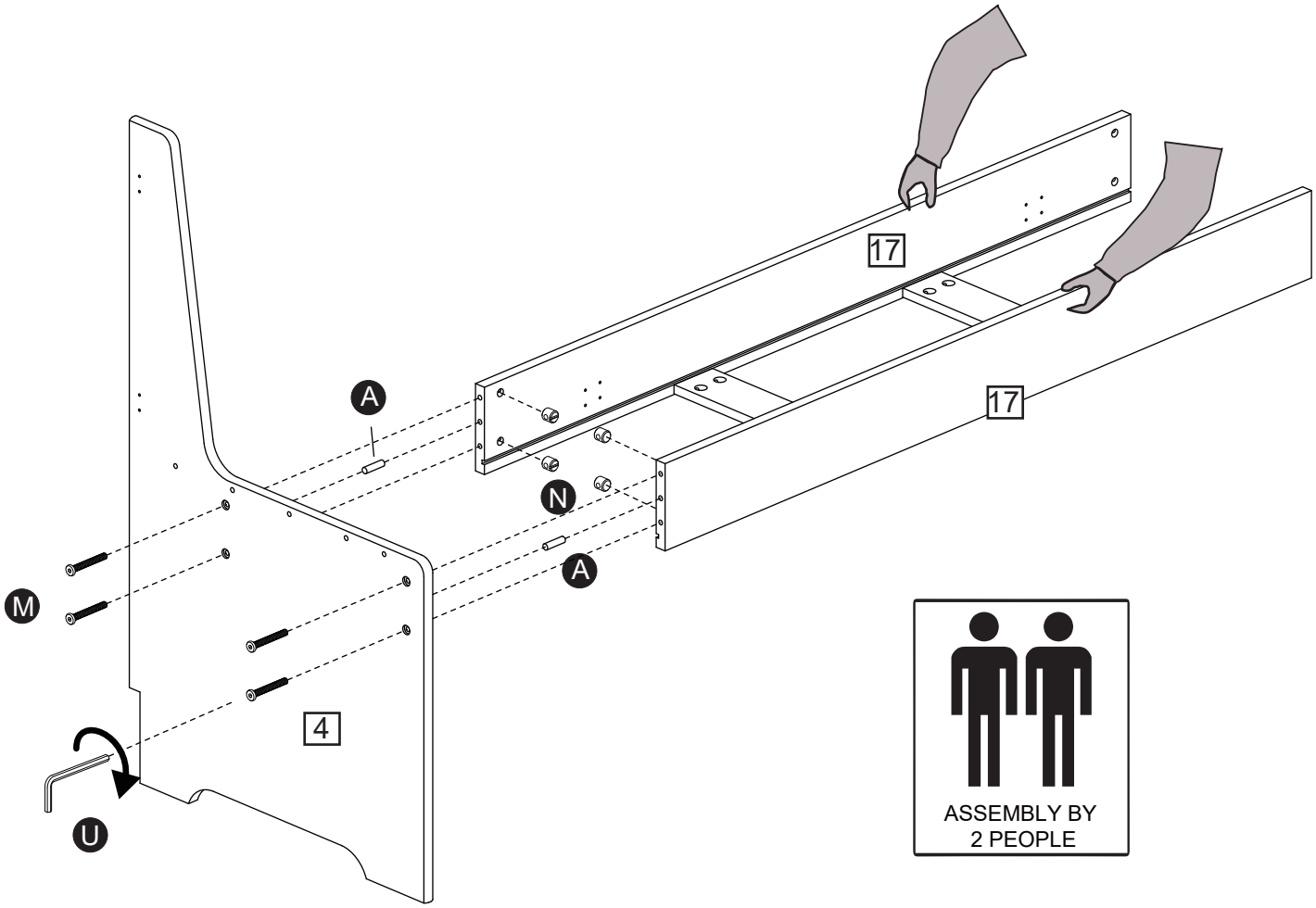

Ask someone to help hold it, use wrench (U), bolt (M), and nut (N) to assemble panel (4) onto panel (17).

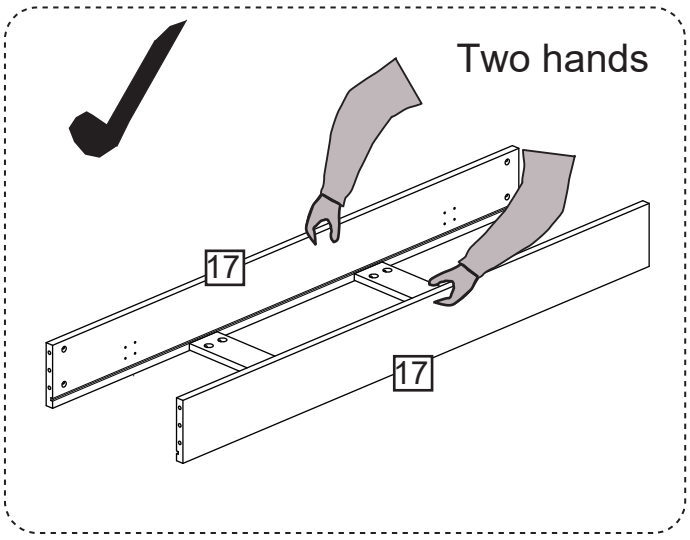

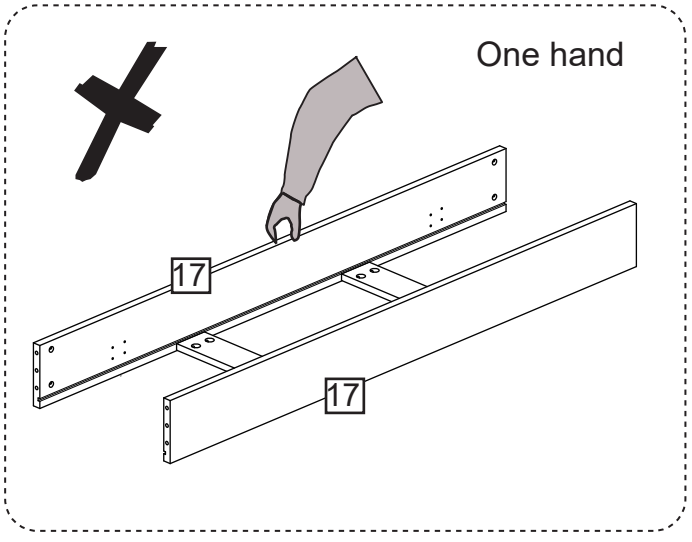

Assembly Instructions

Step 16

CAM-LOCK
Tighten until shoulder is flush with panel.Do not overtighten or undertighten(see example below)

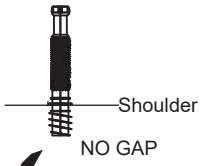

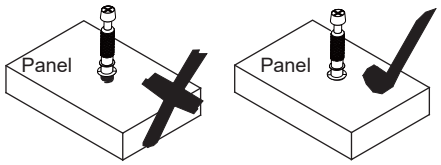

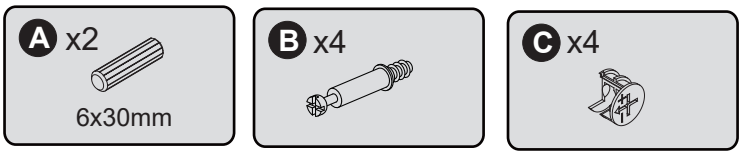

Lock cam bolt (B) into panel (13).

First, insert wooden dowel (A) into panel (14),
then assemble panel (13) onto panel (14).

Assembly Instructions

Step 17

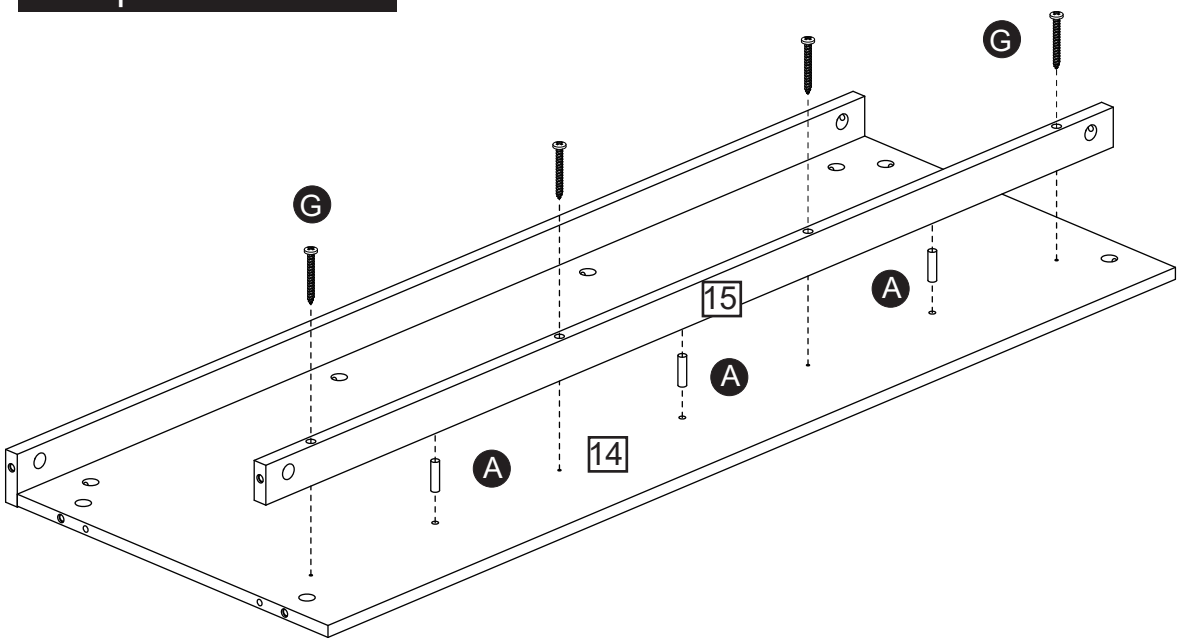

A x3
6x30mm

G x4
4x40mm

First, insert wooden dowel (A) into panel (14),
then use screw (G) to secure panel (15) to panel (14).

Step 18

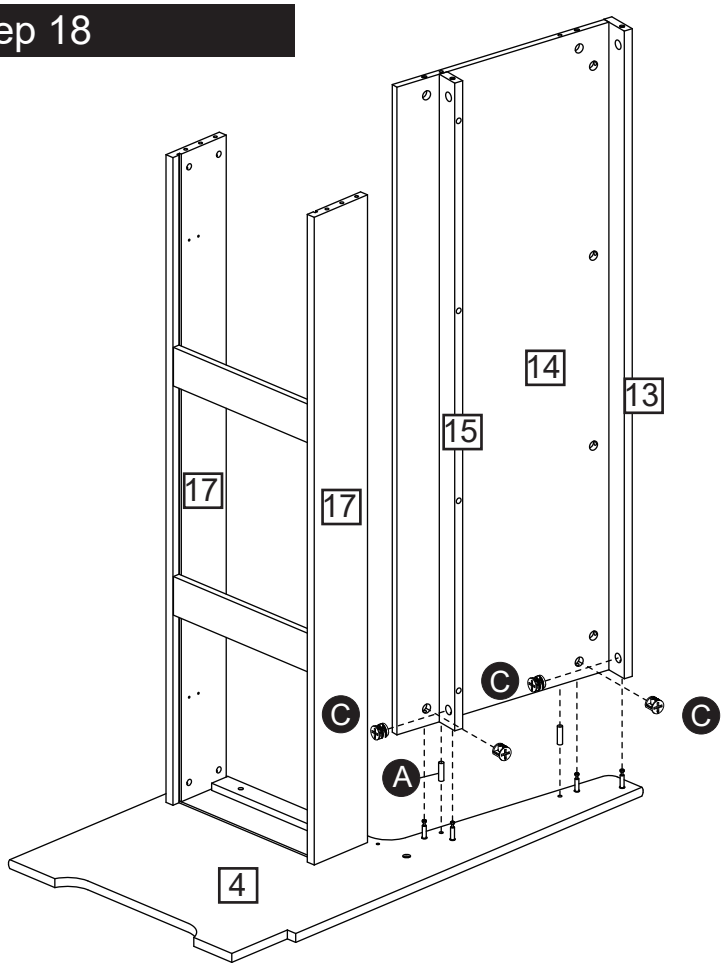

A x2
6x30mm

C x4

First, insert wooden dowel (A) into panel (4), then assemble panels (13), (14), and (15) onto panel (4), insert cam lock (C), and tighten.

Assembly Instructions

Step 19

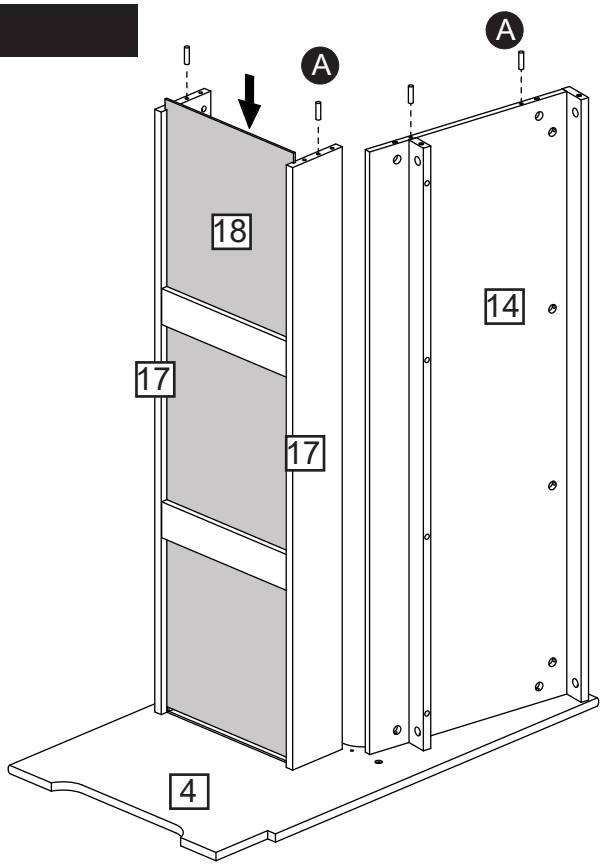

A x4



6x30mm

First, insert wooden dowel (A) into panels (14) and (17), then slide panel (18) into the groove of panel (17).

Step 20

H x4



4x12mm

O x2

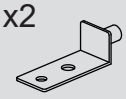

Use screw (H) to secure part (O) to panels (16).

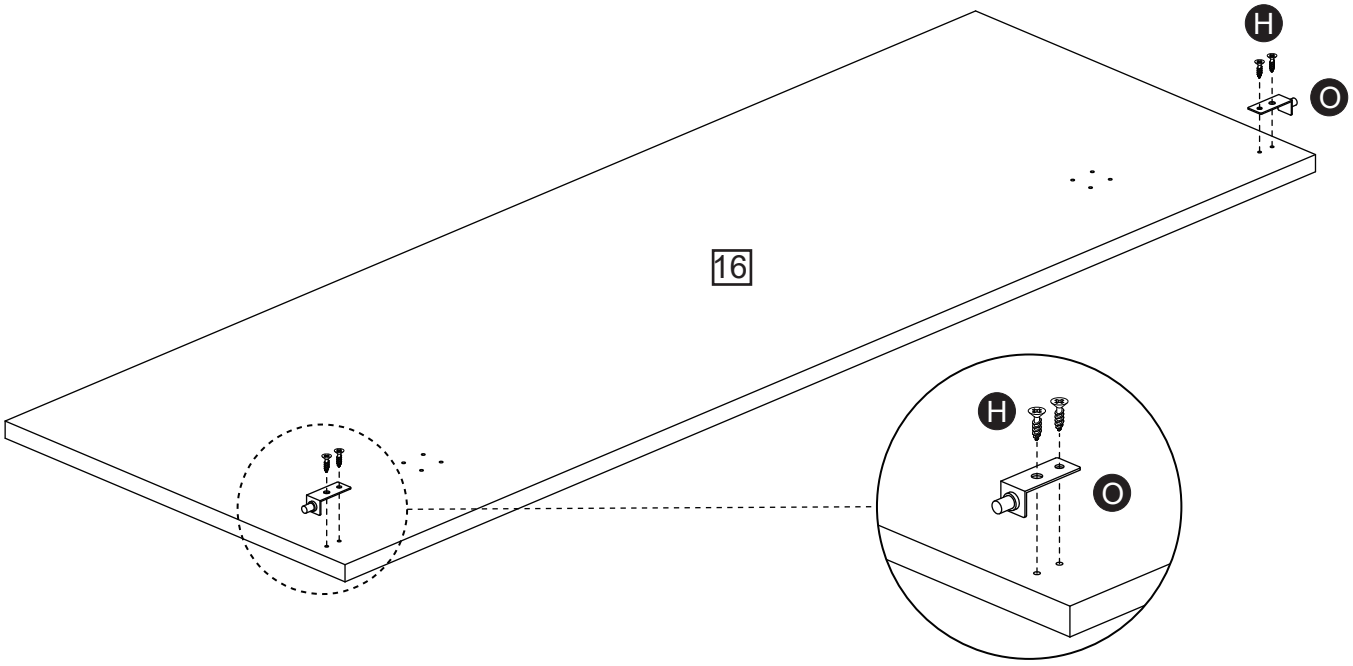

Assembly Instructions

Step 21

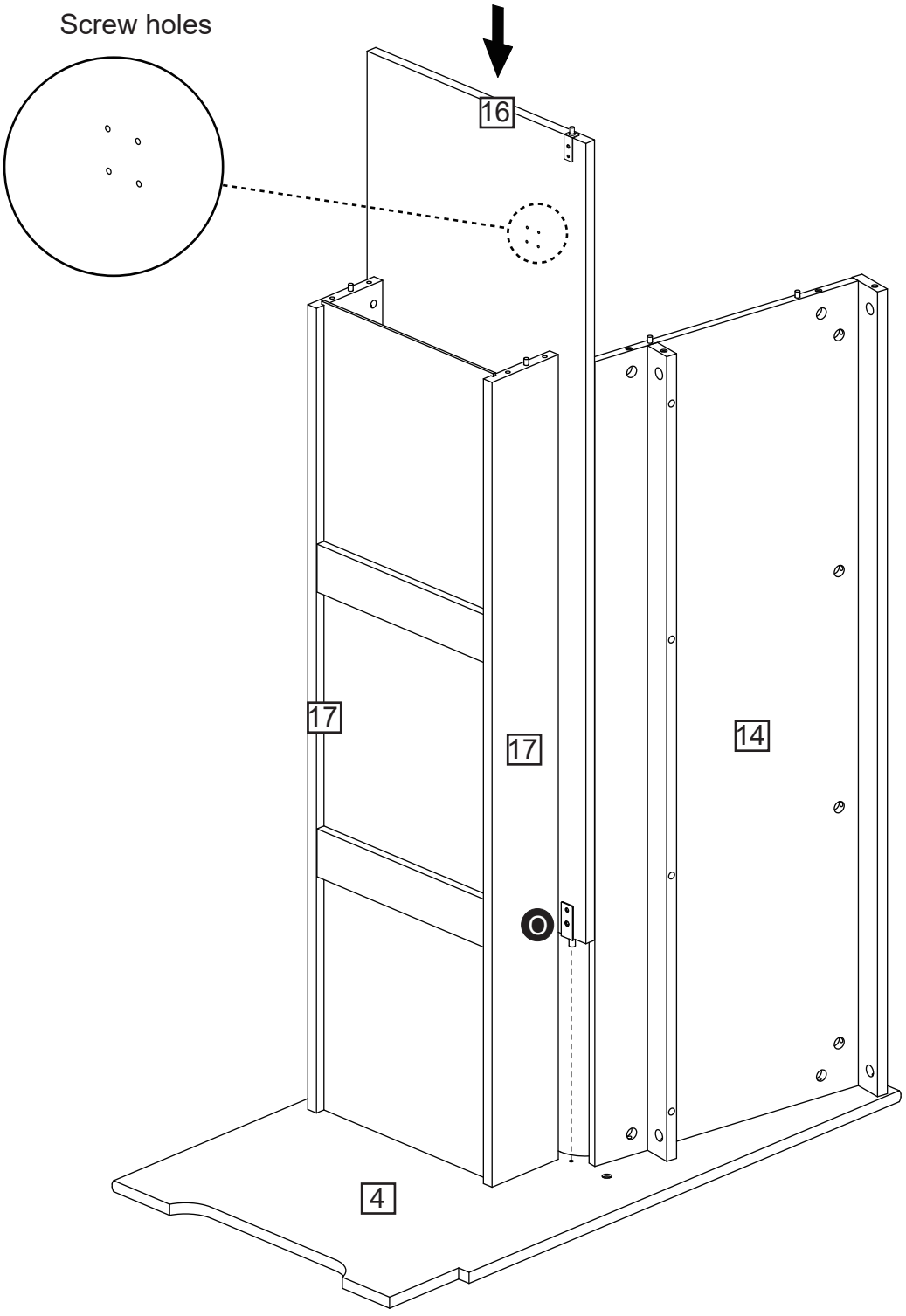

Insert part (O) into panel (4),

Assembly Instructions

Step 22

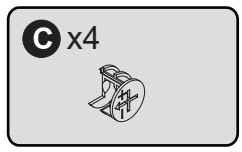

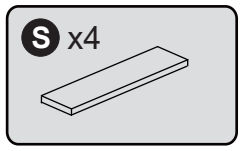

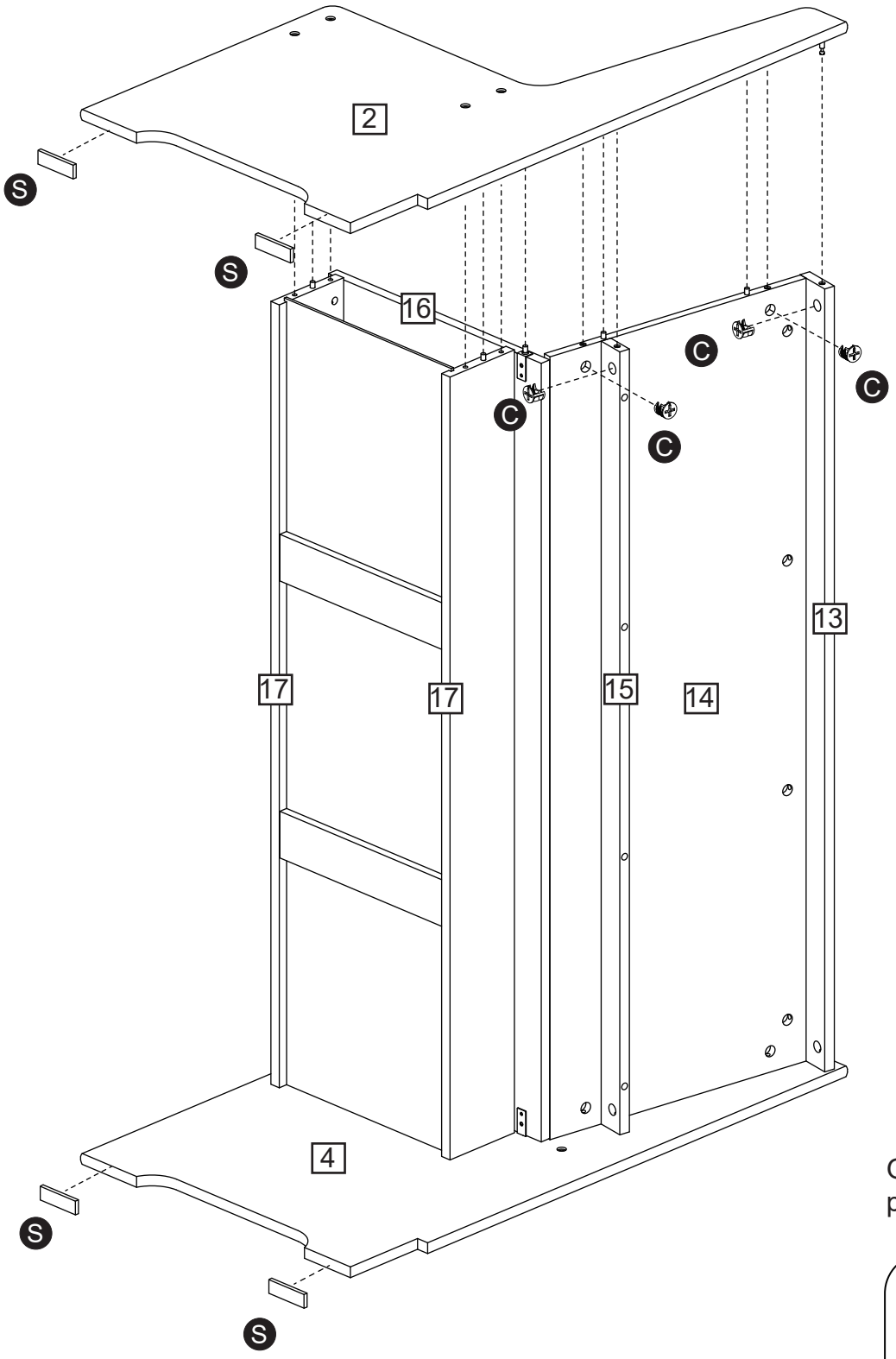

Assemble panels (2), (13), (14), (15), and (17) together, insert cam lock (C), and tighten.

Glue part (S) onto panels (2) and (4).

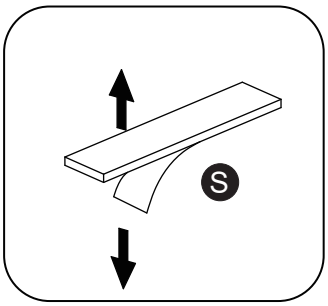

Assembly Instructions

Step 23

Open panel (16), use wrench (U), bolt (M), and nut (N) to assemble panel (2) onto panel (17).

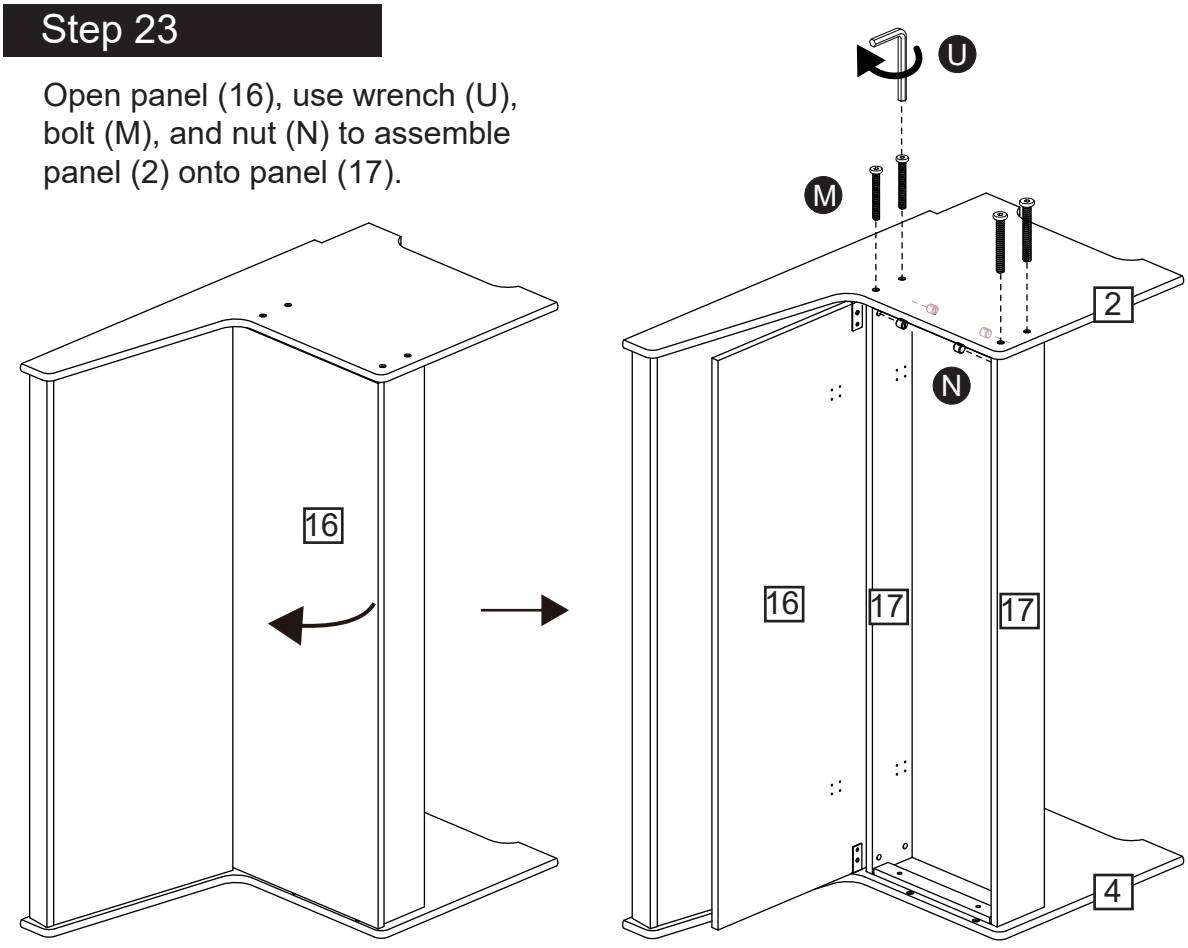

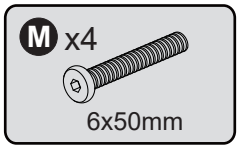

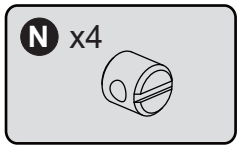

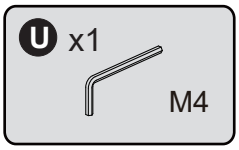

Step 24

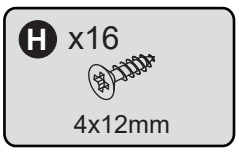

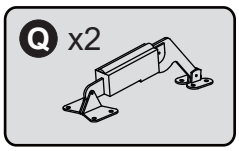

Use screw (H) to secure part (Q) to panels (16) and (17).

Assembly Instructions

Assembly Part C

Part C

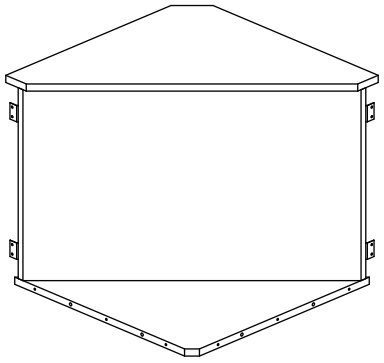

Step 25

B x2

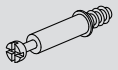

H x8



4x12mm

P x4



CAM-LOCK
Tighten until shoulder is flush with panel.Do not overtighten or undertighten(see example below)

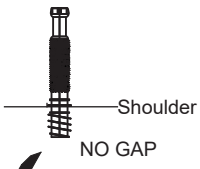

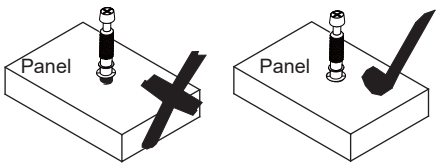

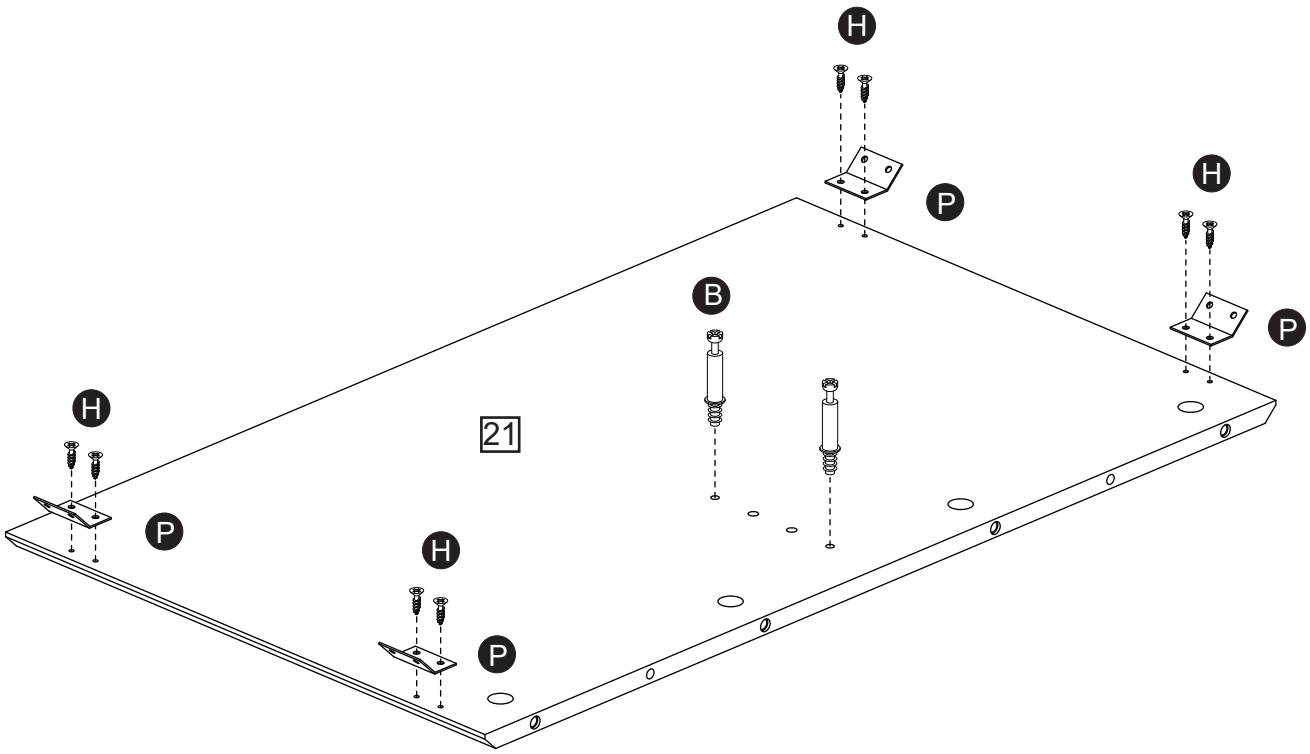

Lock cam bolt (B) into panel (21). Use screw (H) to attach part (P) to panel (21).

Assembly Instructions

Step 26

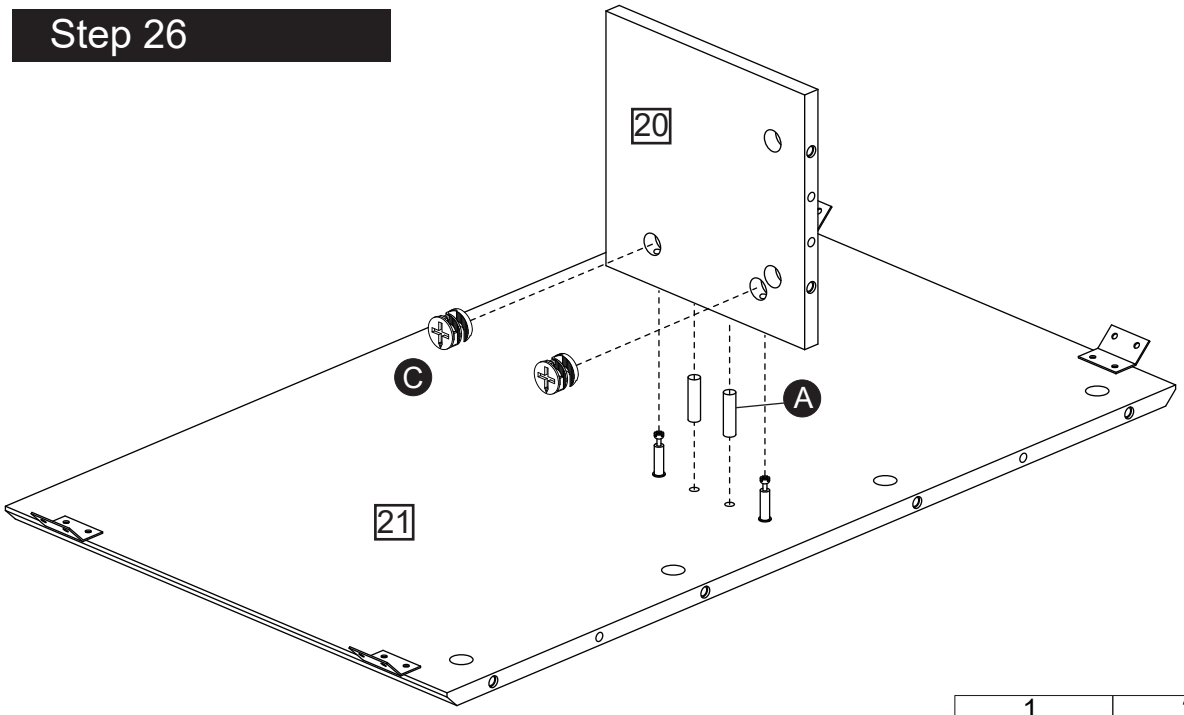

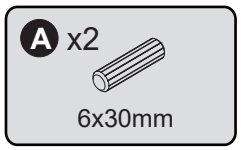

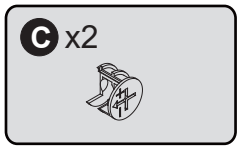

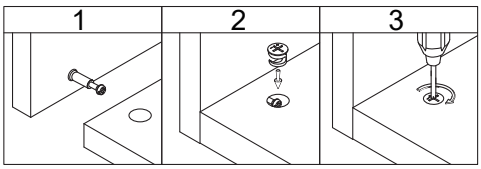

First, insert wooden dowel (A) into panel (21), then assemble panel (20) onto panel (21), insert cam lock (C), and tighten.

Step 27

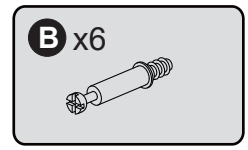

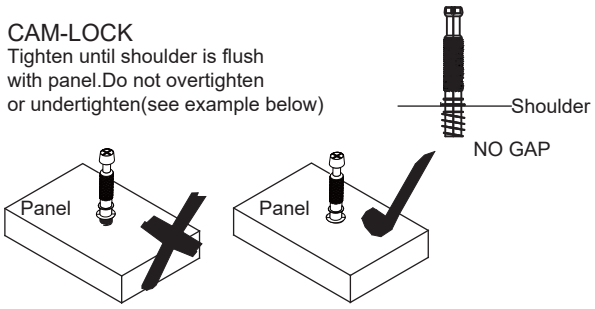

Lock cam bolt (B) into panel (19).

Assembly Instructions

Step 28

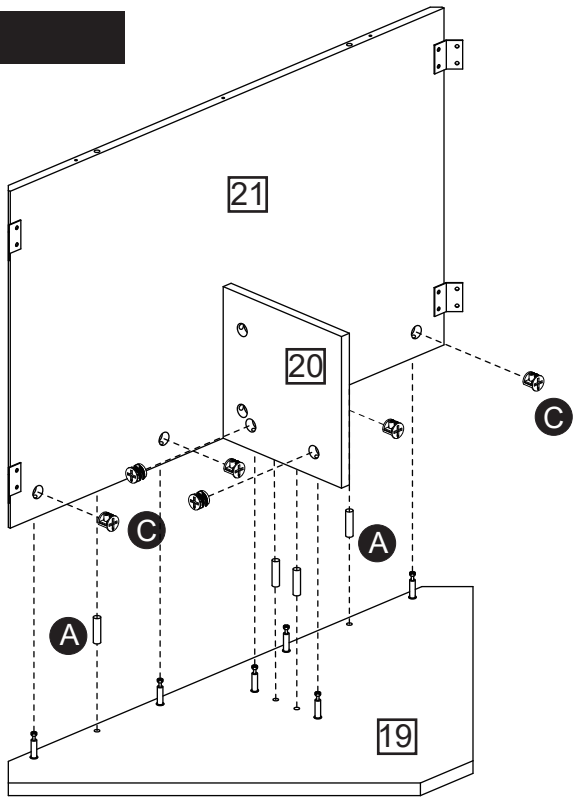

A x4
6x30mm

C x6

First, insert wooden dowel (A) into panel (19), then assemble panels (20) and (21) onto panel (19), insert cam lock (C), and tighten.

Step 29

First, insert wooden dowel (A) into panel (21), then use screw (G) to assemble panel (22) onto panel (21).

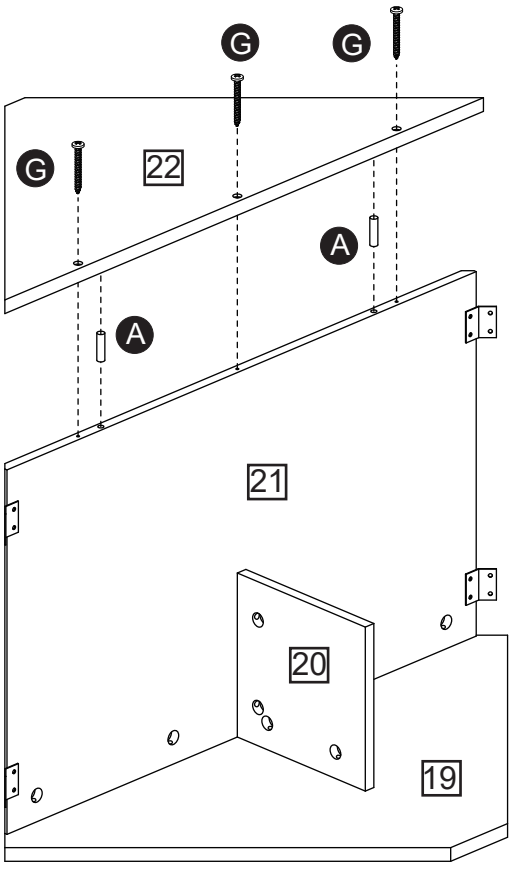

A x2
6x30mm

G x3
4x40mm

Assembly Instructions

Assembly Part A & Part B & Part C

There are two combination methods for Part A & Part B & Part C. The first one is shown on Pages 29-30; the second one is shown on Pages 31-32.

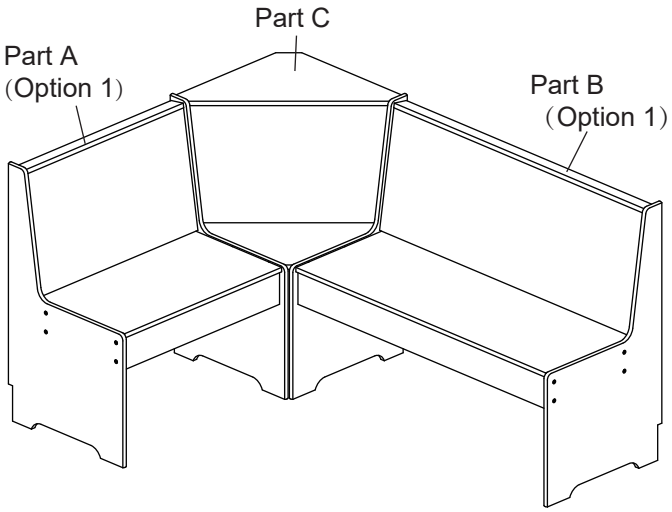

Step 30

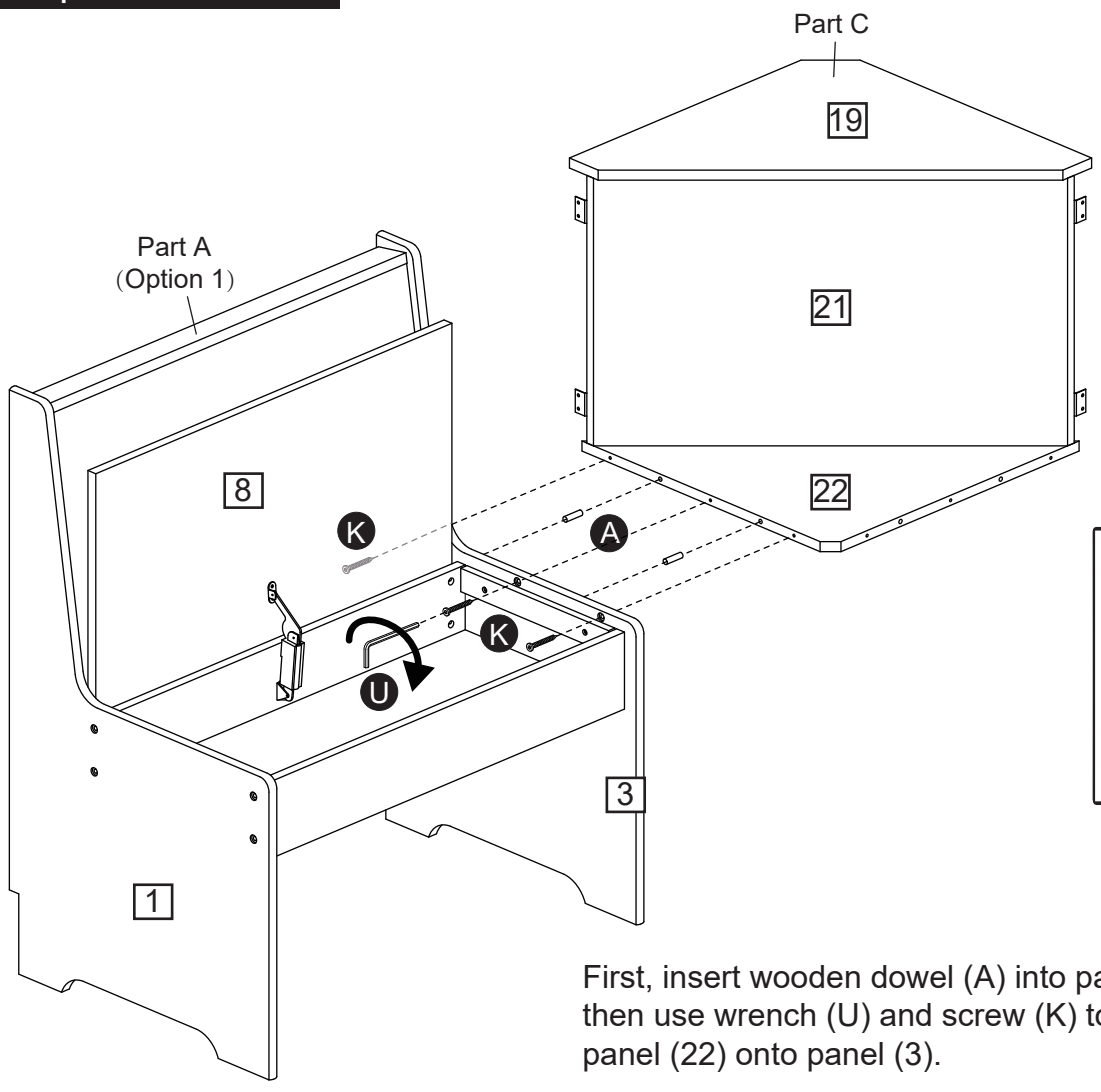

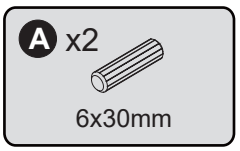

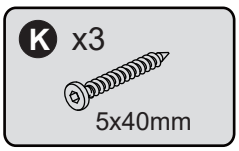

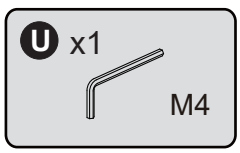

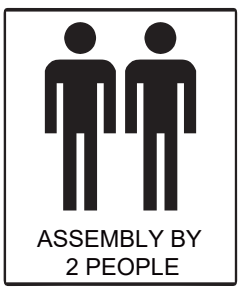

First, insert wooden dowel (A) into panel (22), then use wrench (U) and screw (K) to assemble panel (22) onto panel (3).

Assembly Instructions

Step 31

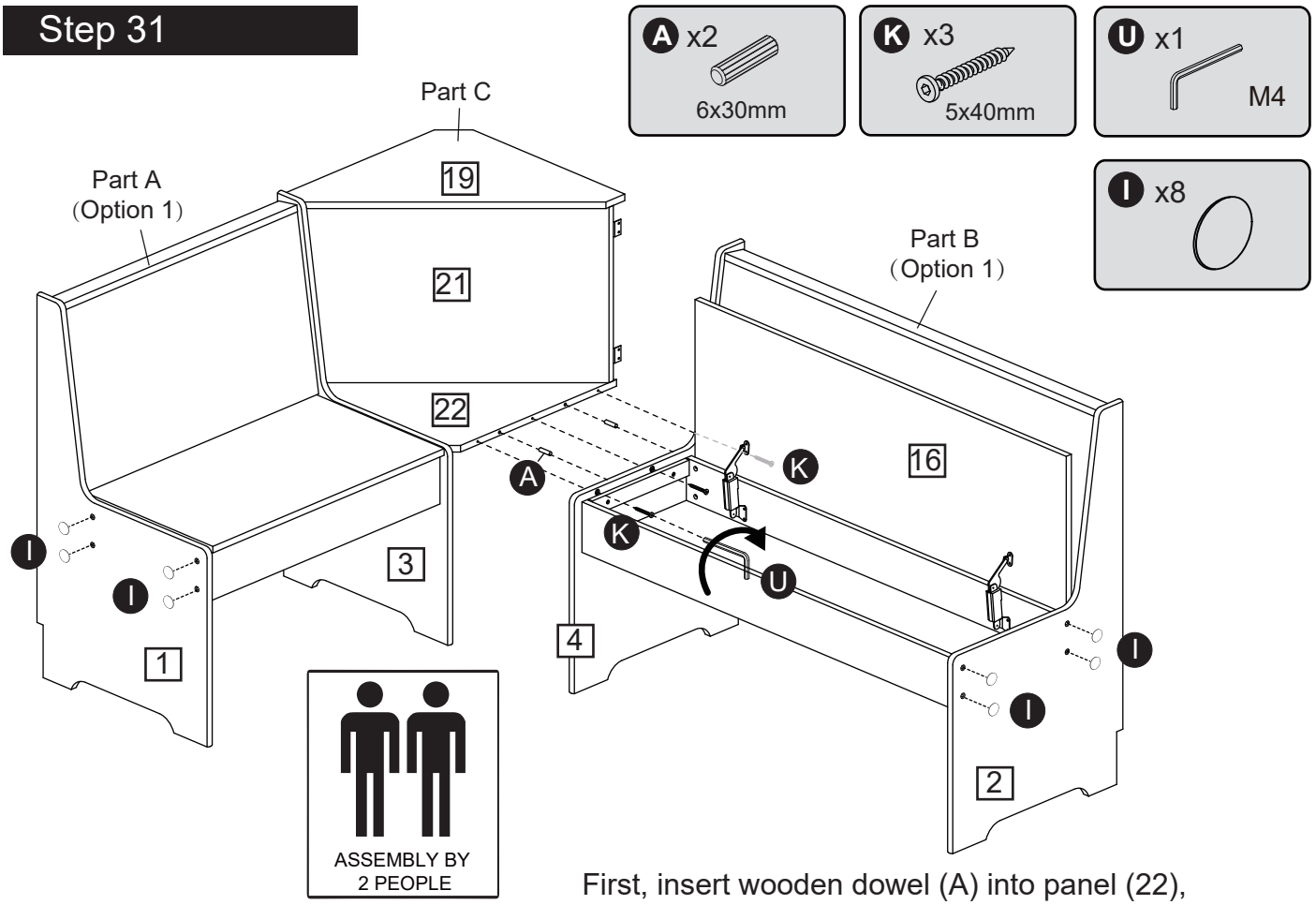

Glue part (I) onto panels (1) and (2).

First, insert wooden dowel (A) into panel (22), then use wrench (U) and screw (K) to assemble panel (4) onto panel (22).

Step 32

Use screw (H) to secure part (P) to panel (21).

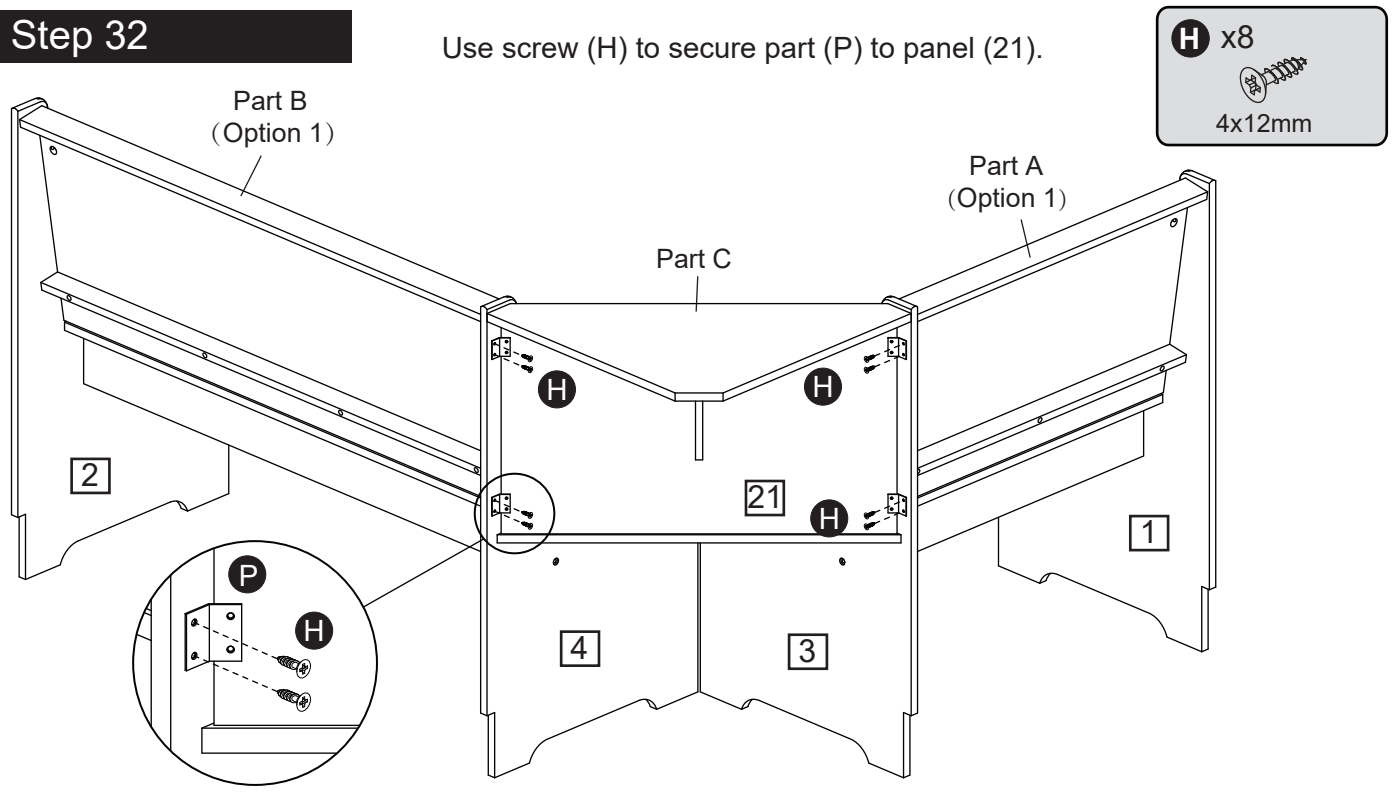

Assembly Instructions

Assembly Part A & Part B & Part C

There are two combination methods for Part A & Part B & Part C. The first one is shown on Pages 29-30; the second one is shown on Pages 31-32.

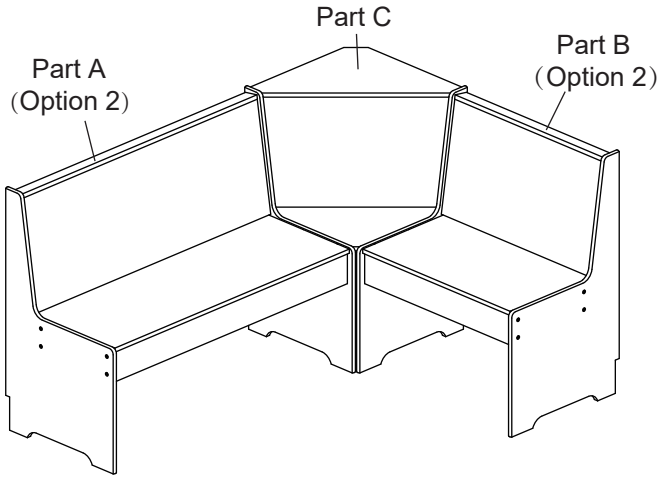

Step 30

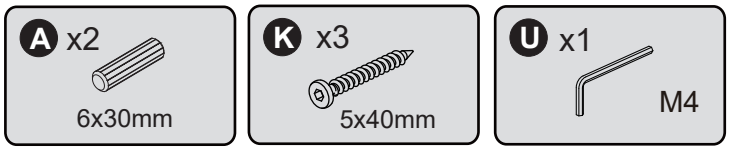

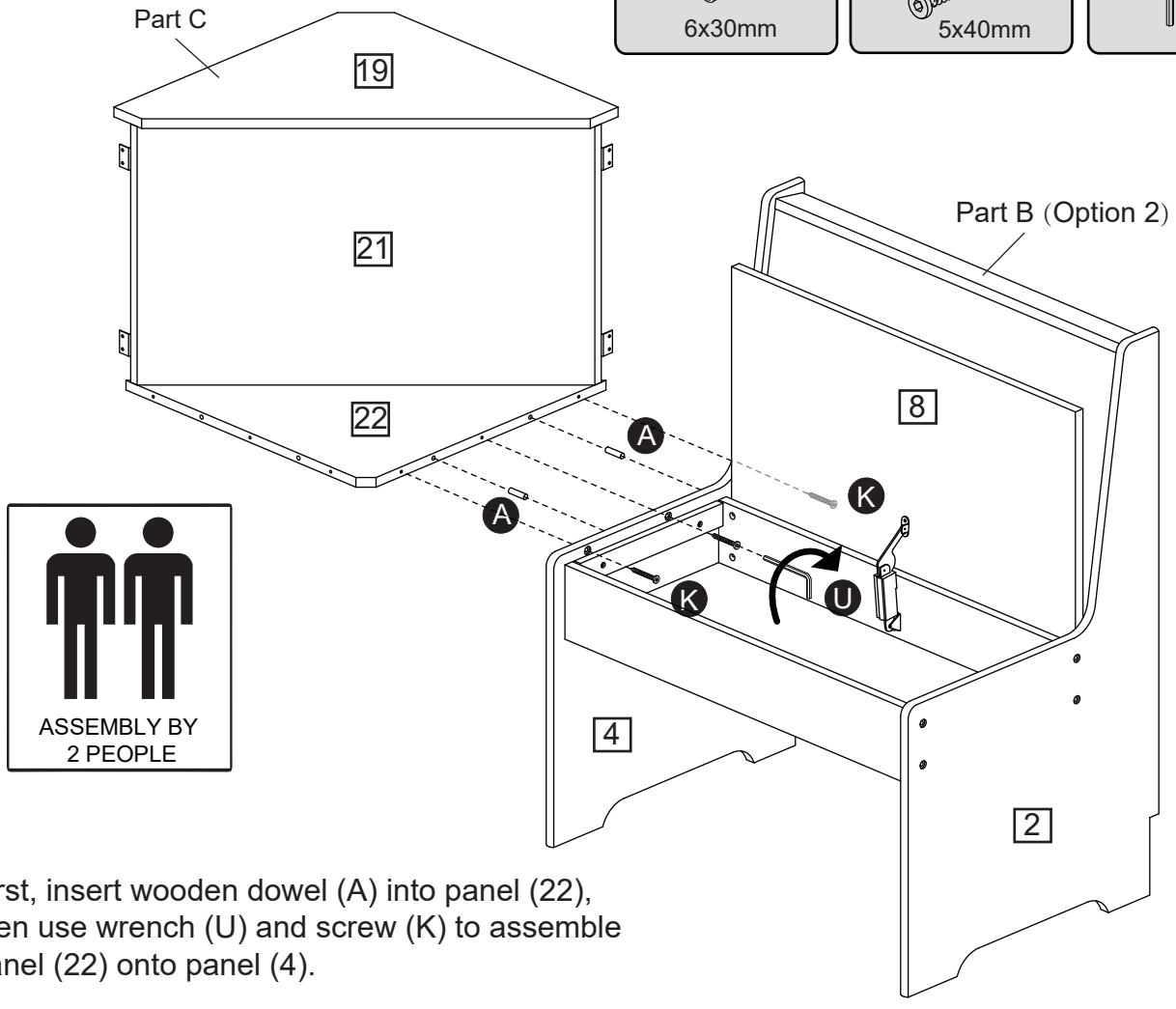

First, insert wooden dowel (A) into panel (22), then use wrench (U) and screw (K) to assemble panel (22) onto panel (4).

Assembly Instructions

Step 31

A x2 6x30mm

K x3 5x40mm

U x1 M4

I x8

ASSEMBLY BY 2 PEOPLE

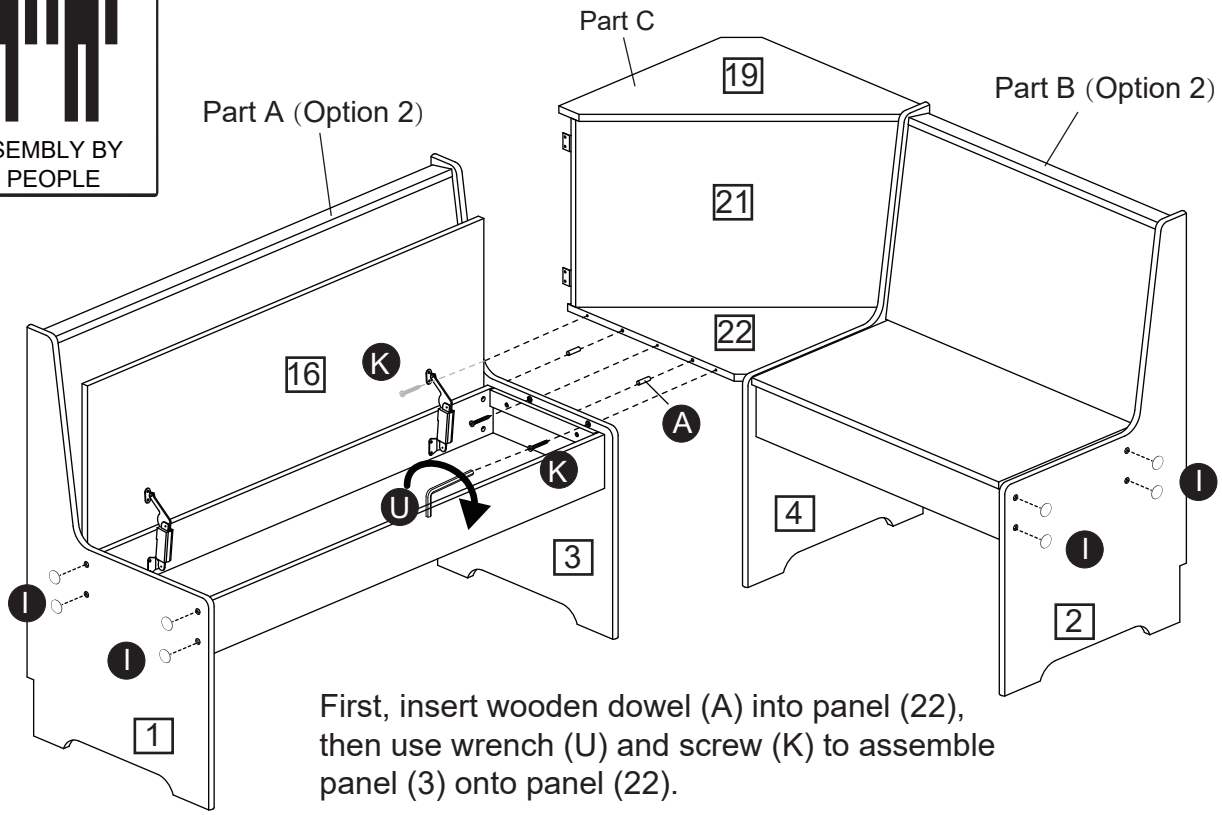

First, insert wooden dowel (A) into panel (22), then use wrench (U) and screw (K) to assemble panel (3) onto panel (22).

Step 32

H x8 4x12mm

Use screw (H) to secure part (P) to panel (21).

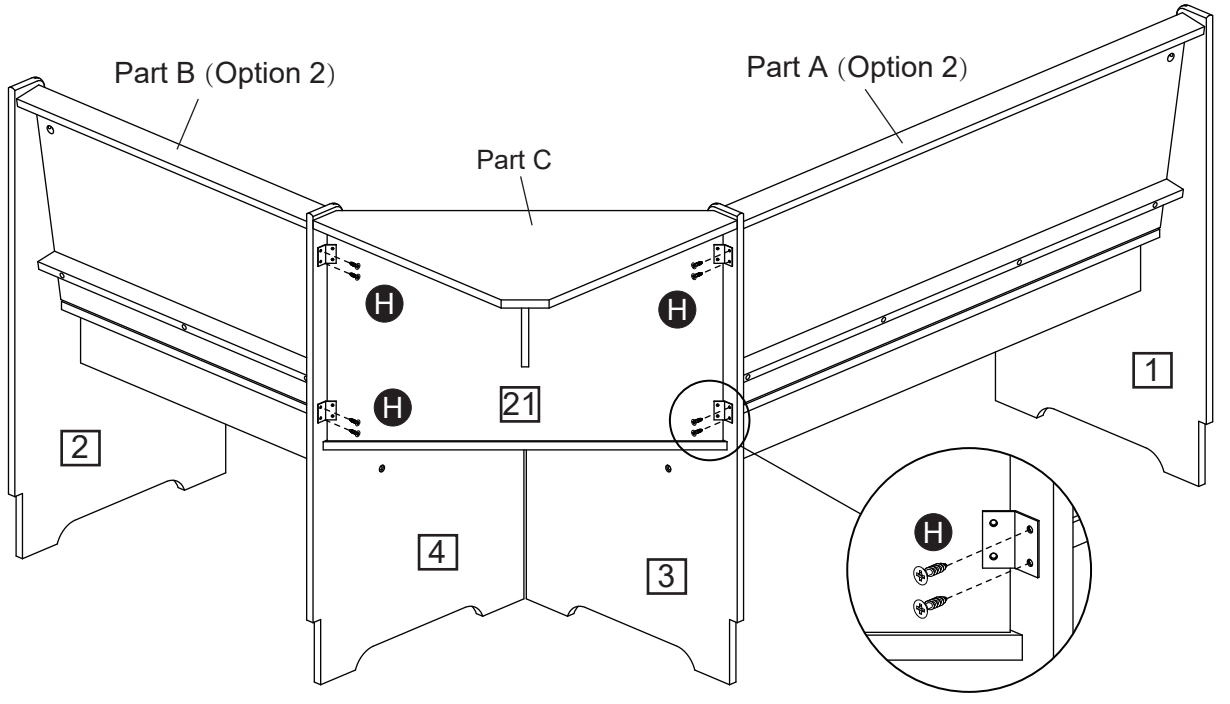

L-Shaped Corner Bench

Sku:
C001847022

V3.0