Assembly Instruction

A x1	B x1	C x2	D x1
E x1	F x1	G x1	H x4
I x4	J x4	K x1	
L x6	M x5	N x1	O x12
P x4	Q x1		

Step1

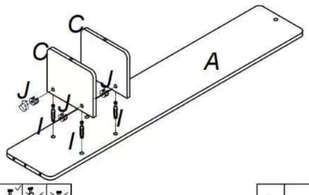



I	X4
J	X8

Step2

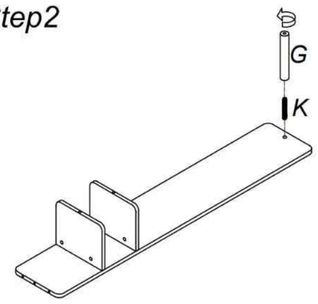

K	X1

Step3

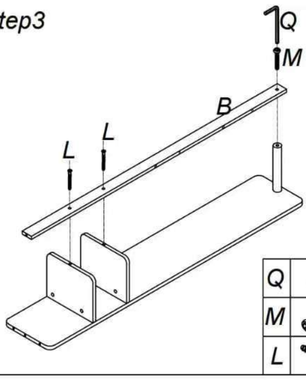

Q	X1
M	X1
L	X2

Step4

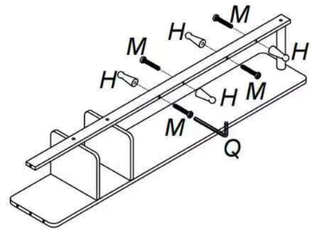

M	X4

Step5

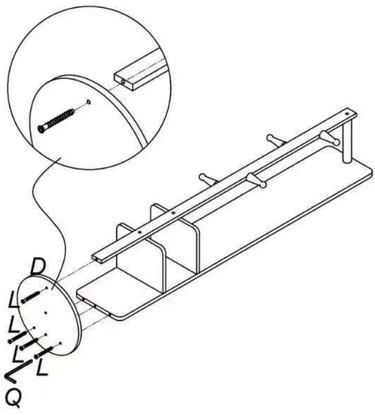

Q	X1
L	X4

Step6

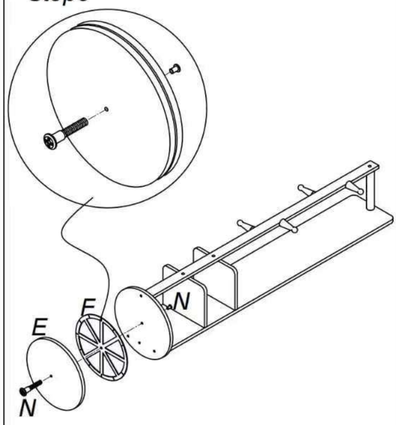

N	X1

Step7

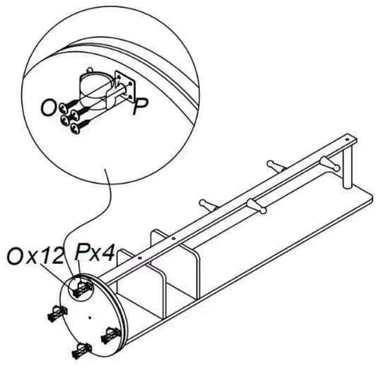

O	X12
P	X4

Step8

