Bed

Assembly Instruction – Please keep properly for future reference.

If you find any missing boxes, damaged parts, or accessory shortages, please contact the customer service team of your purchasing channel immediately. We will resolve the issue as quickly as possible.

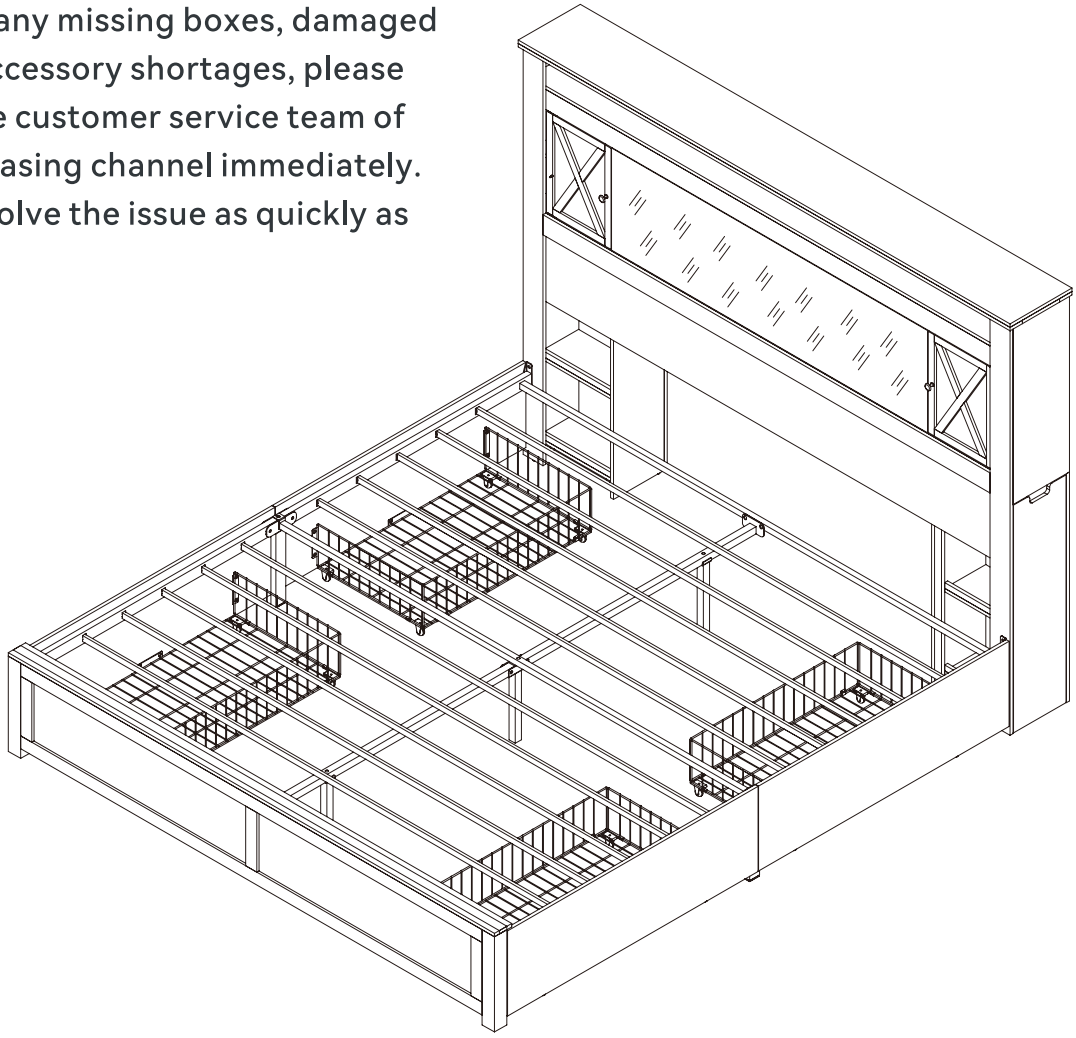

CONTACT US

- In order to receive assistance more quickly, please provide

THE FOLLOWING INFORMATION:

- Order number
- Purchase platform
- Purchase date
- Detailed description of the issue along with photos (if applicable)

Important – Please read these instructions carefully before starting the installation.

EN

Before Assembly

Thank you for choosing this product!
To ensure safe use and long-term maintenance, please read this manual carefully and keep it properly for future reference.

Packaging Notice:

1. Multi-Box Shipping Notice

This product is packaged in 3 separate boxes for shipping and may arrive in batches at different times. To ensure a smooth assembly process, please make sure all boxes are received before unpacking and starting the installation.

2. Box and Packaging Verification

Each box is labeled with a corresponding number. Please refer to the packing list on the next page of this manual to verify that all boxes have been received.

If you find any missing boxes, damaged parts, or accessory shortages, please contact the customer service team of your purchasing channel immediately. We will resolve the issue as quickly as possible.

Important Notice:

- To ensure a smooth and successful installation, please read this guide carefully. It provides essential information about the required tools, materials, and assembly steps. Follow the instructions in each section to avoid any issues caused by improper installation.
- Please review all operational and safety guidelines to ensure proper and secure assembly.
- This guide reflects the most current product information available at the time of printing. We reserve the right to make changes to product features, packaging, or availability without prior notice.
- Before starting assembly, ensure that all necessary electrical and environmental preparations are completed.
- This manual contains important instructions regarding installation, cleaning, and maintenance. Please read it thoroughly and keep it for future reference.

Safety Warnings

1. Follow Warning Labels

Do not remove, alter, or obscure any warning labels on the product or packaging. Always adhere to the displayed safety instructions to ensure proper usage.

2. Conduct Regular Inspections

Periodically inspect all components to ensure they are properly installed, undamaged, and securely fastened. Report any issues to customer support immediately.

3. Practice Safe Usage

Avoid playing, jumping, or engaging in activities on or under the bed, as this may cause injury or structural damage.

4. Beware of Rope Hazards

Do not attach ropes, hooks, straps, or any non-designated accessories to any part of the bed, as this may pose a safety hazard.

5. Keep This Manual for Reference

Store this manual in a safe and accessible place for future reference.

6. Safety is a Shared Responsibility

Ensuring safety is a joint responsibility between the manufacturer and the user. Please follow all safety precautions during assembly and use.

Disclaimer

We are committed to delivering safe, high-quality, and reliable products to our customers. If you have any questions, concerns, or require further assistance, please contact our customer service team without hesitation.

Safety Instructions / Warnings

Please read and follow all instructions carefully before installation and use.

WARNING:
Risk of electric shock – Do not open or disassemble electrical parts.

- **Use only the power cord specifically provided for this product.**
  Plug rating: 110-240V~, 50/60Hz 1500W. USB output: DC 5V / 2A.
- Do not use with damaged power cords or plugs.
- Keep power cables away from moving or sharp parts of the furniture.

- Do not use extension cords or power strips unless specifically approved for the load.
- This product is **not a toy**. Do not allow children to play with electrical components or moving parts.
- Children under 8 years old must be kept away from the furniture unless continuously supervised.
- Keep remote controls, control switches, and ports out of children's reach.
- Always **disconnect the product from power** before cleaning, maintenance, or relocation.
- Do not attempt to open, modify, or repair electrical components.
- **Repairs must be performed by qualified professionals only.**
- Do not insert any foreign objects into openings or mechanisms.
- Clean with a dry cloth or a slightly damp soft cloth. Do not use solvents.
- This product is intended **for indoor** use only in dry environments.
- Do not expose the furniture to moisture, liquids, or direct sunlight.
- * Ensure stability and clearance around any moving parts (e.g., lift mechanisms, recliners).
- Do not overload power outlets or USB ports beyond the specified ratings.
- **Always unplug the product when it is not in use.**

FCC Information:

CAUTION: Changes or modifications not expressly approved by the party responsible for compliance could void the user's authority to operate the equipment!

This device complies with Part 15 of the FCC Rules. Operation is subject to the following two conditions:

1) This product may cause harmful interference.

2)This product must accept any interference received, including interference that may cause undesired operation.

WARNING: Changes or modifications to this product not expressly approved by the party.responsible for compliance could void the user's authority to operate the product.

Note: This product has been tested and found to comply with the limits for a Class B digital device pursuant to Part 15 of the FCC Rules, These limits are designed to provide reasonable protection against harmful interference in a residential installation.

This product generates, uses and can radiate radio frequency energy, and if not installed and used in accordance with the instructions, may cause harmful interference to radio communications. However, there is no guarantee that interference will not occur in a particular installation. If this product does cause harmful interference to radio or television reception,which can be determined by turning the product off and on, the user is encouraged to try to correct the interference by one or more of the following measures.

- Reorient or relocate the receiving antenna.
- Increase the distance between the product and receiver.
- Connect the product to an outlet on a circuit different from that to which the receiver is connected.
- Consult the dealer or an experienced radio/TV technician for assistance.

Maintenance and Care Recommendations



1. Regular Cleaning

To maintain hygiene and prevent bacterial growth, clean the product regularly. Use a damp, well-wrung cloth to avoid excess moisture and prevent surface scratches.

2. Prevent Corrosion

Keep the product away from acidic or alkaline substances, as they may cause corrosion or damage to the materials.

3. Use Only Authorized Replacement Parts

Do not use unauthorized or third-party replacement parts, as they may compromise the product's safety and durability. If a replacement is needed, contact the manufacturer or an authorized dealer for approved parts.

4. Cleaning Precautions

Do not machine wash or rinse any part of the product directly with water, as this may damage the materials and reduce product lifespan.

5. Prevent Pests

Keep wooden furniture away from damp or humid areas to prevent pest infestations and wood damage. Use a dehumidifier or air conditioner during humid seasons to maintain a dry environment.

6. Protect from Sunlight

Avoid placing furniture in direct sunlight, as prolonged exposure may cause cracking, discoloration, or fading. If sunlight exposure is unavoidable, use curtains or shades to minimize damage.

7. Keep Away from Fire

Position furniture away from heat sources and open flames to prevent damage and maintain its condition.

8. Perform Regular Care

Apply furniture oil periodically to maintain the wood’s shine, prevent cracks, and extend its lifespan.

9. Clean Frequently

Regularly vacuum dust and debris, especially underneath furniture, to keep it clean and hygienic.

10. Maintain a Dry Environment

Ensure good ventilation to prevent moisture buildup, which can damage wood. Use a dehumidifier if necessary to protect the furniture.

11. Avoid Corrosive Liquids

Keep furniture away from acidic or alkaline substances, as these can damage the surface and reduce durability.

12. Use a Damp Cloth for Cleaning

Wipe furniture with a well-wrung damp cloth to prevent water damage or swelling. Avoid excessive moisture exposure.

13. Limit Sun Exposure

Excessive sunlight can dry out and weaken wood. Position furniture in shaded areas or use UV-blocking curtains to protect it from damage.

Customer Service Guide



Thank you for choosing our product! We are committed to providing you with excellent service. If you find any missing parts, damaged packaging, or product damage after receiving all packages, please follow the steps below to quickly contact our customer service team. We will do our best to resolve your issue.

1. Missing Parts

Verify Parts:

1. Refer to the “Parts List” in the manual to verify the name, specifications, and quantity of the missing parts.
2. Take a clear photo of the parts list and mark the missing parts with detailed information, e.g., “Missing 5 pieces of M6×30mm screws.”

Contact Us:

By Email:

Send an email with the subject line “Missing Parts Issue.” Include the following in the email:

- A description of the missing parts and a photo of the parts list.
- Order details (order number, purchase platform, purchase date).

2. Product or Packaging Damage

If it affects normal use:

Steps:

1. Take clear photos or videos showing the damaged parts and the extent of the damage (multi-angle shots are recommended).
2. Email the photos/videos along with order details to with the subject line "Product Damage Issue."

Resolution:

After verification, we will arrange for a replacement part, product exchange, or refund as quickly as possible.

If it does not affect normal use:

Steps:

1. Contact our customer service team.
2. Provide a description of the damage and include relevant photos or videos.

Resolution:

We will provide repair guidance or an appropriate compensation plan based on the specific situation.

Helpful Tips

To process your issue efficiently, please prepare the following information:

- Order details (order number, purchase platform, purchase date).
- Clear photos or videos.
- We are committed to providing quick and professional solutions, no matter the size of the issue, to ensure your satisfaction.

Thank you for your trust and support!
We hope you enjoy using our product!

Parts List

Box 1

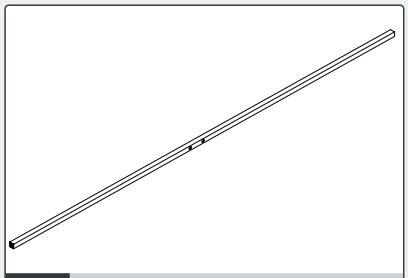

2 x2

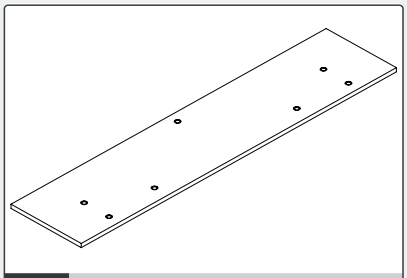

3 x4

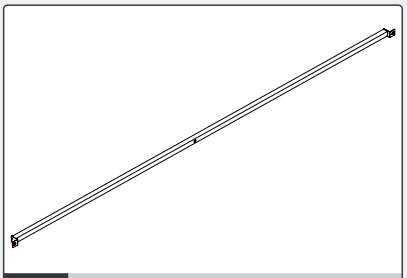

4 x1

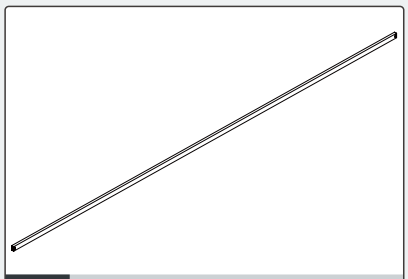

5 x10

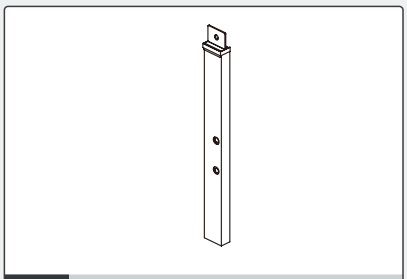

10 x1

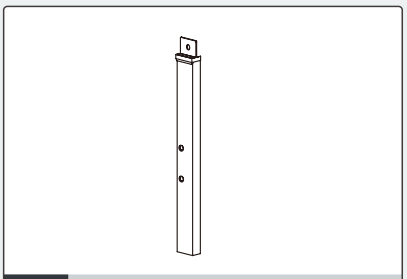

11 x1

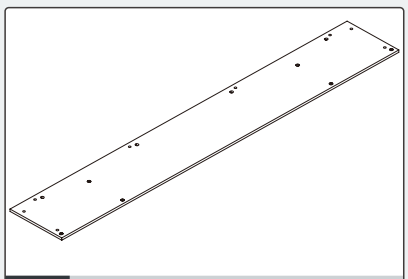

12 x1

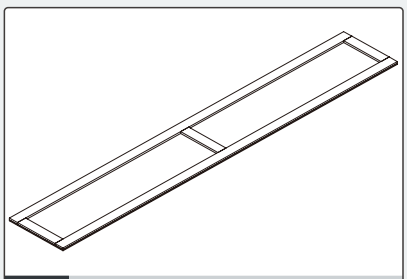

13 x1

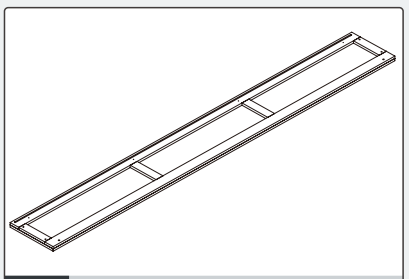

14 x1

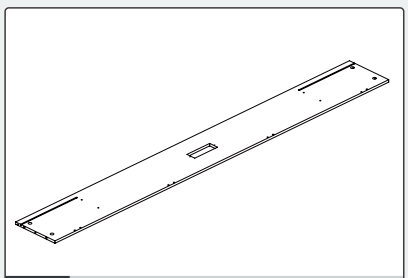

15 x1

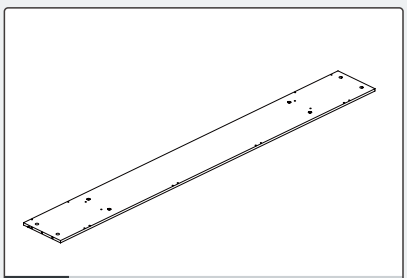

16 x1

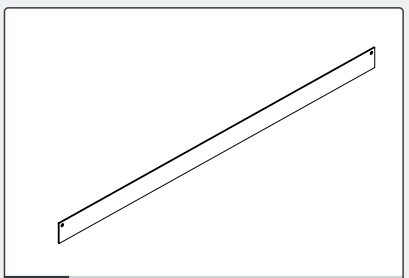

17 x1

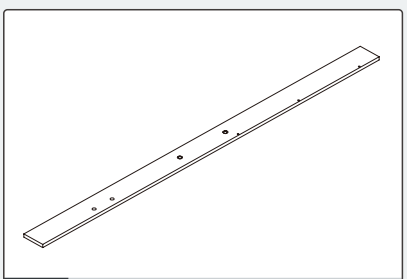

20 x1

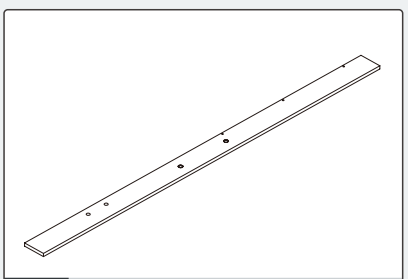

21 x1

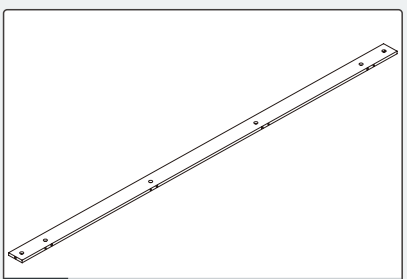

22 x1

Box 1

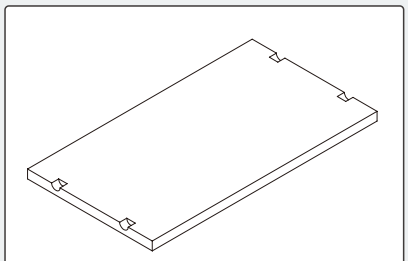

24 x2

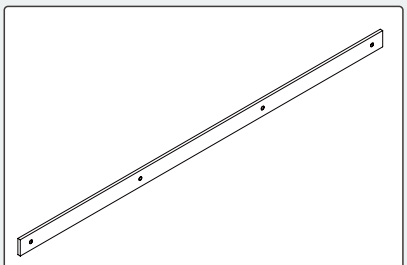

29 x1

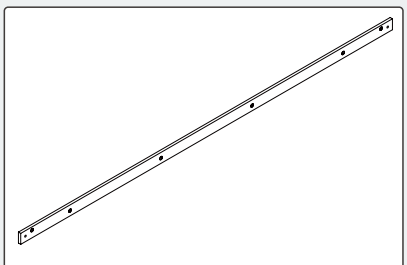

42 x1

Box 2

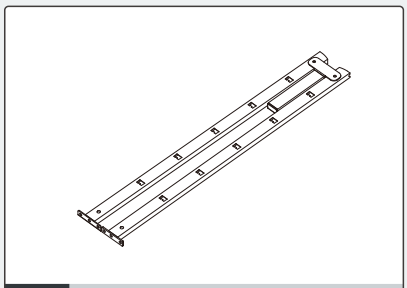

1 x2

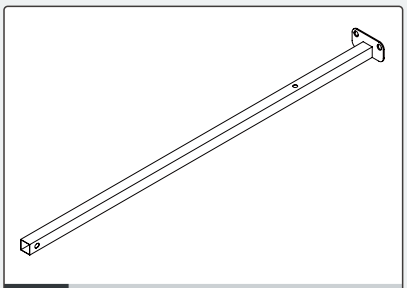

7 x2

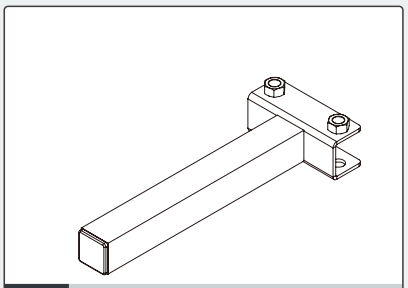

8 x1

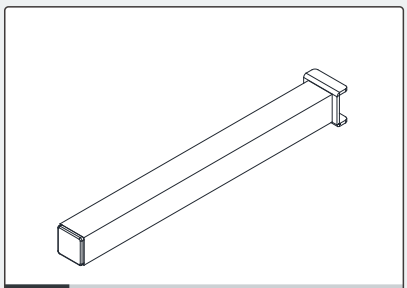

9 x2

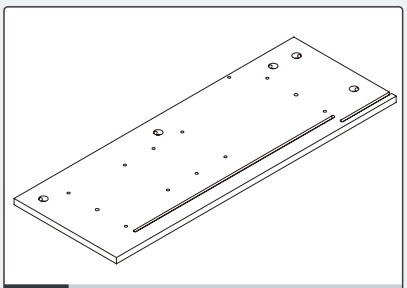

18 x1

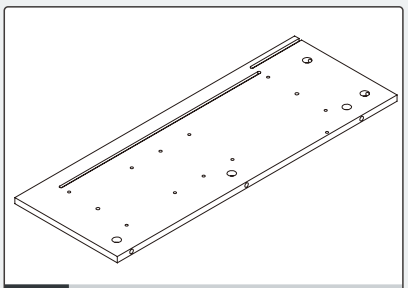

19 x1

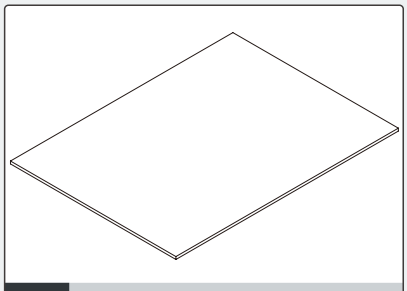

23 x2

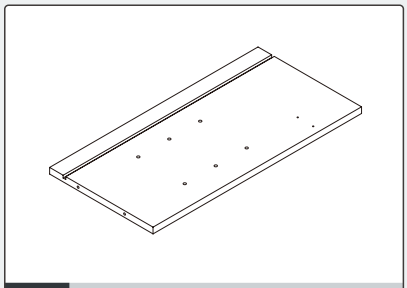

25 x1

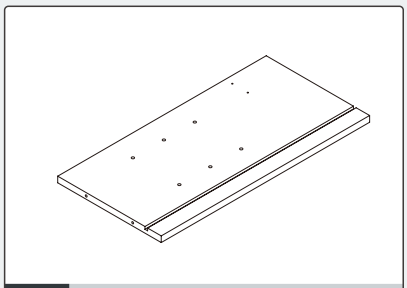

26 x1

Box 2

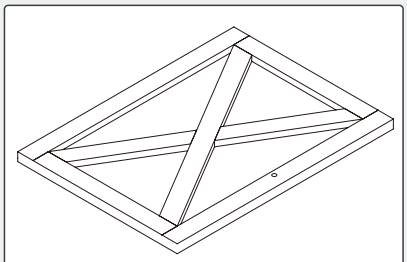

27 x1

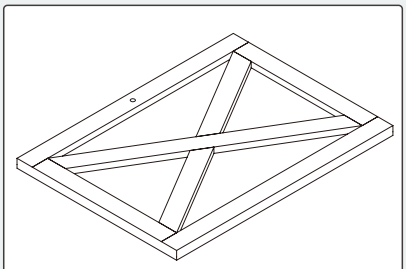

28 x4

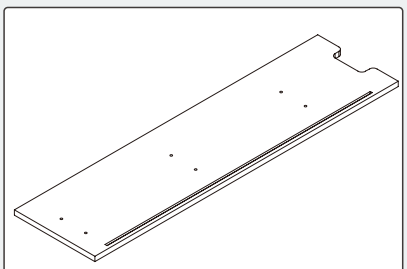

30 x1

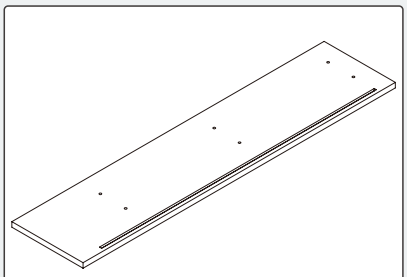

31 x1

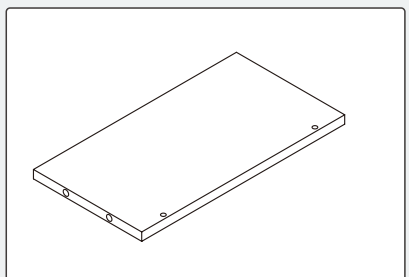

32 x4

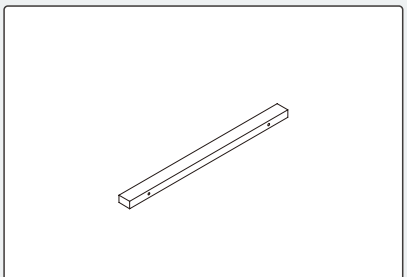

33 x6

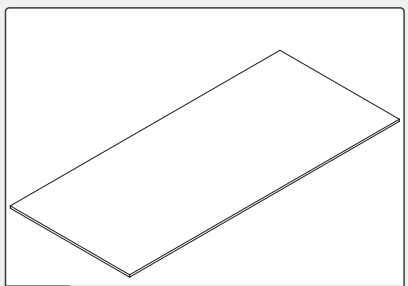

34 x2

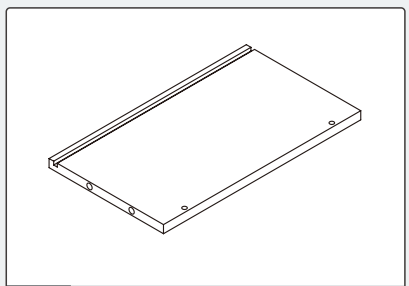

35 x2

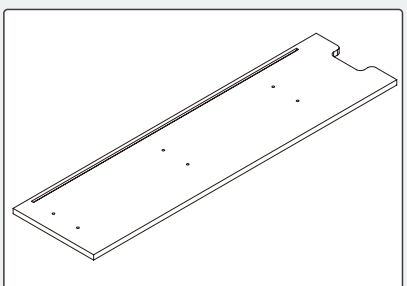

36 x1

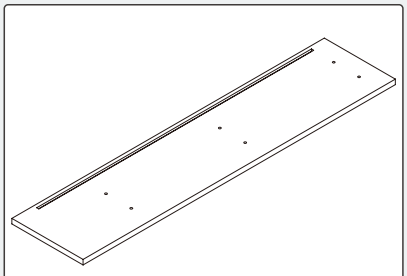

37 x1

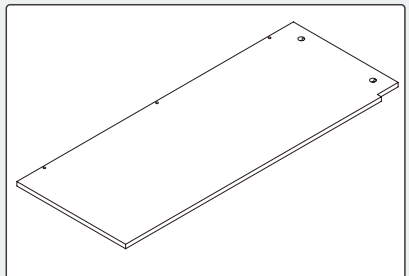

38 x1

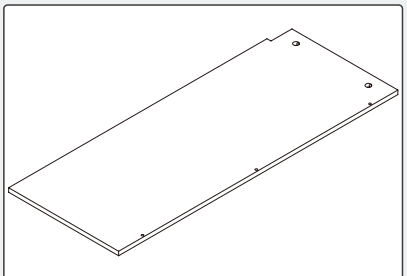

39 x1

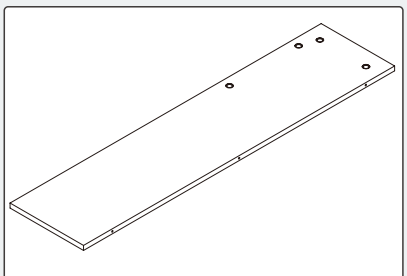

40 x1

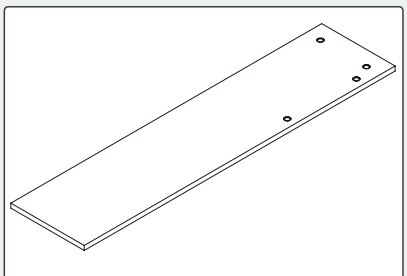

41 x1

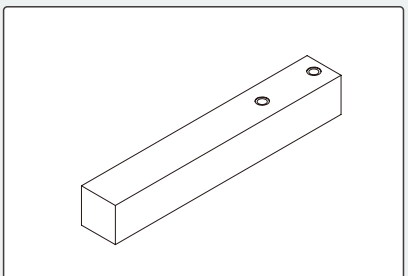

43 x1

Box 2

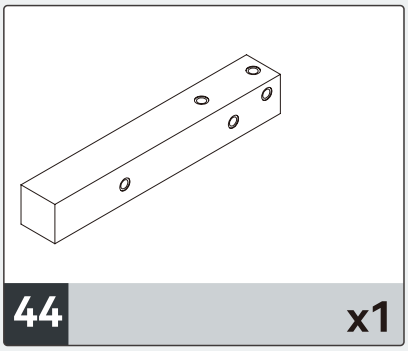

44 x1

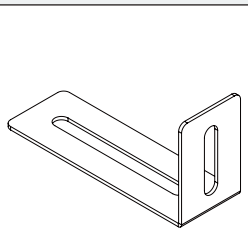

45 x6

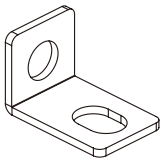

46 x14

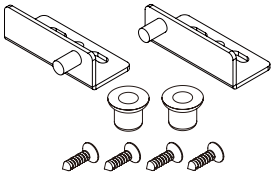

47 x2

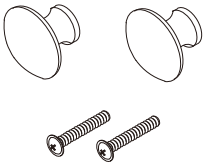

49 x1

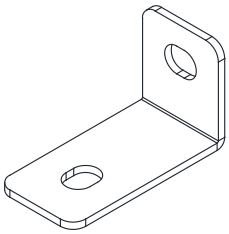

L x8

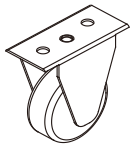

V x24

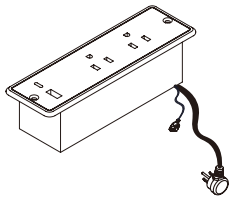

U x1

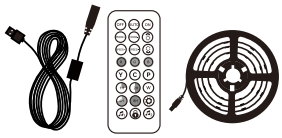

K x1

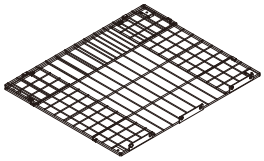

Y4 x4

Box 3

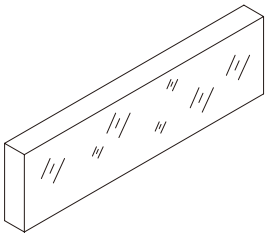

48 x1

Hardware List (in Box 2)

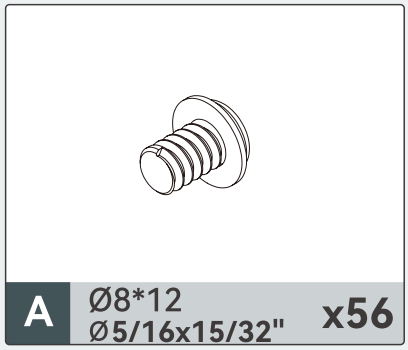

A Ø8*12 Ø5/16x15/32" x56

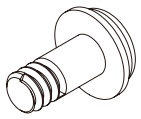

(Colored Zinc)

B Ø8*14 Ø5/16x9/16" x4

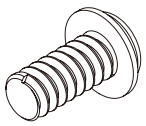

C Ø8*18 Ø5/16x11/16" x14

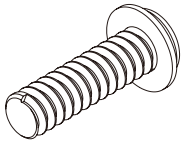

(Colored Zinc)

D Ø8*20 Ø5/16x13/16" x8

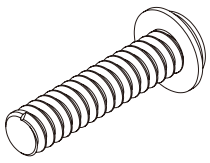

(Colored Zinc)

F Ø8*35 Ø5/16x1-3/8" x10

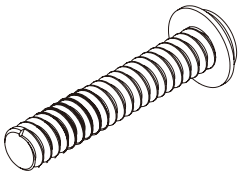

G Ø8*40 Ø5/16x1-9/16" x2

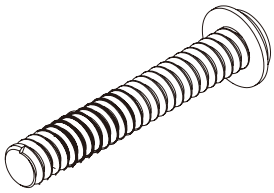

H Ø8*55 Ø5/16x2-3/16" x3

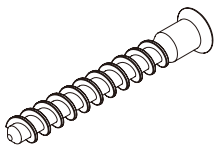

I Ø5*40 Ø3/16x25/16" x10

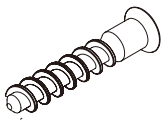

J Ø5*25 Ø3/16x1" x12



M Ø4*10 Ø5/32x25/64" x16

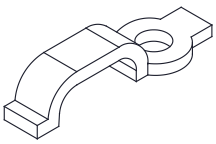

N x4



O Ø4.2*12 Ø5/32x15/32" x18

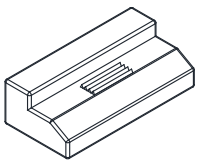

P x20



Q Ø4*10 Ø5/32x3/8" x8

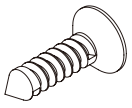

R Ø3.5*12 Ø1/8-15/32" x30

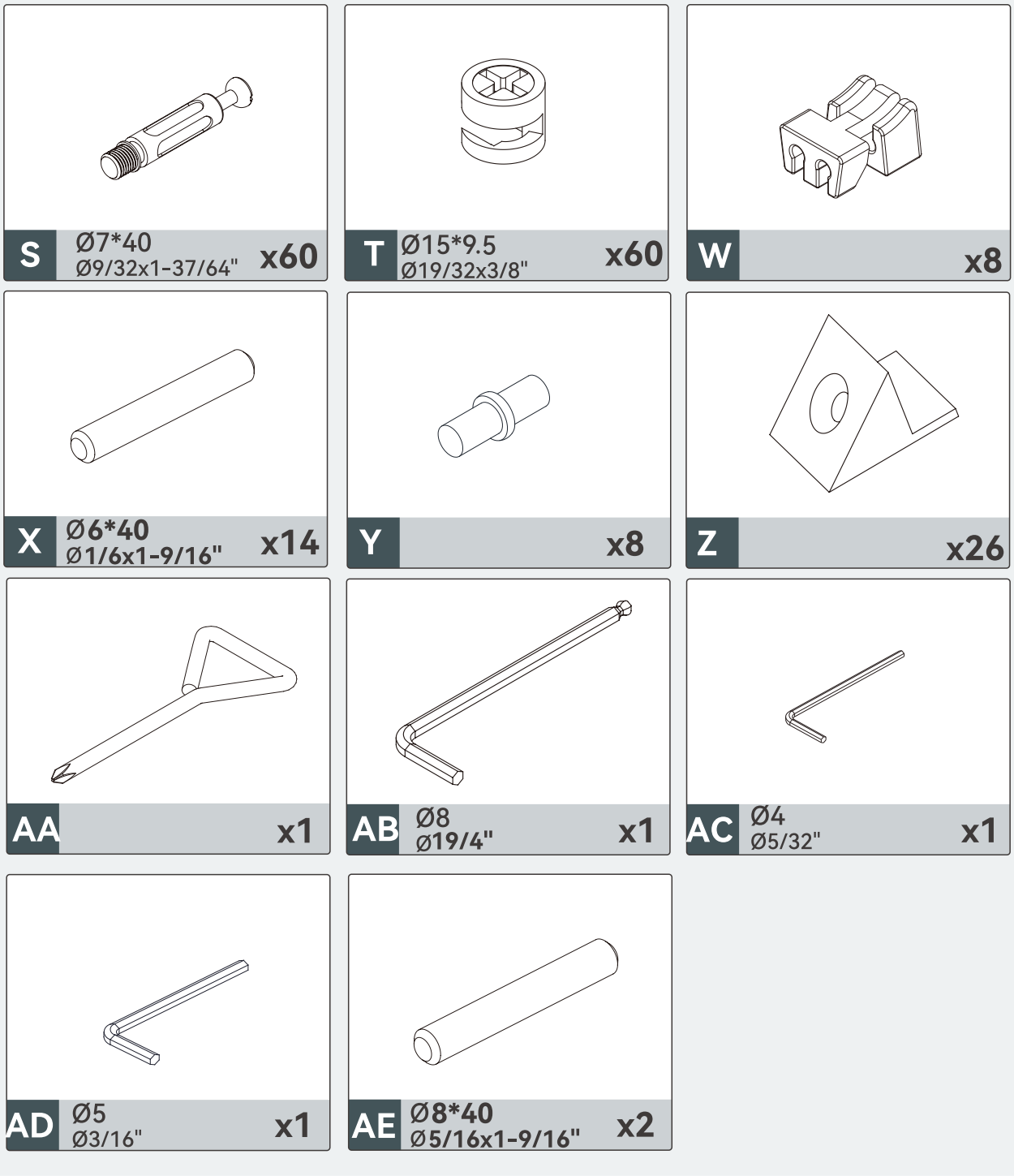
S
Ø7*40
Ø9/32x1-37/64"
x60
T
Ø15*9.5
Ø19/32x3/8"
x60
W
x8
X
Ø6*40
Ø1/6x1-9/16"
x14
Y
x8
Z
x26
AA
x1
AB
Ø8
Ø19/4"
x1
AC
Ø4
Ø5/32"
x1
AD
Ø5
Ø3/16"
x1
AE
Ø8*40
Ø5/16x1-9/16"
x2

Queen Size

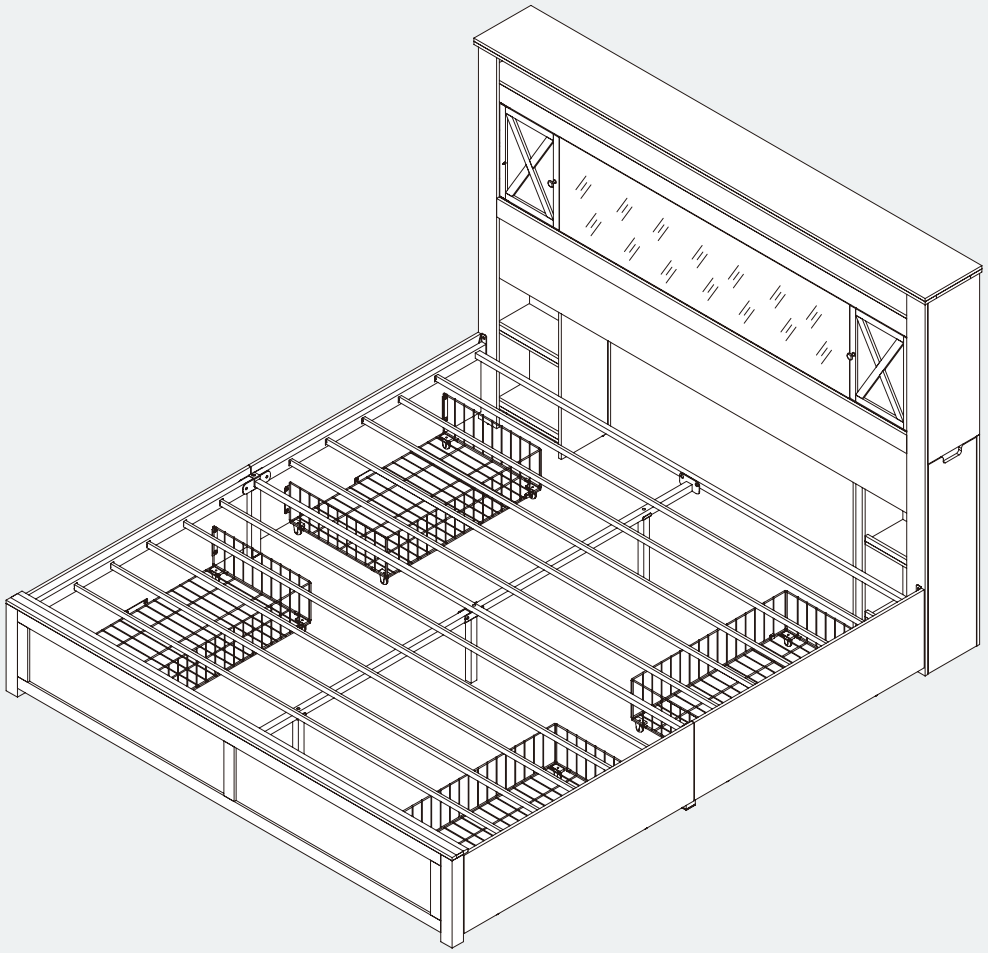

Important:
In each of the previous steps, tighten all screws to approximately 70% to stabilise the overall frame during assembly. Do not fully tighten any screws until the final step is completed.

Tools & Equipment

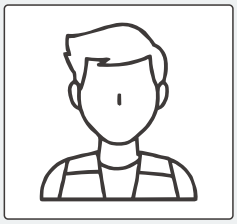

2 people needed

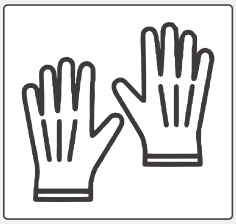

Work gloves

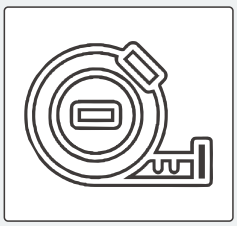

Tape measure

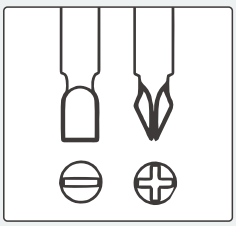

Other Tools Required
Phillips Screwdriver
(Not Included)

Headboard Section Installation

EN

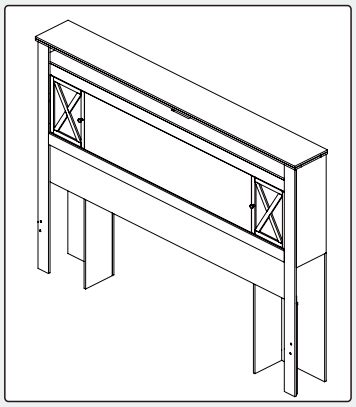

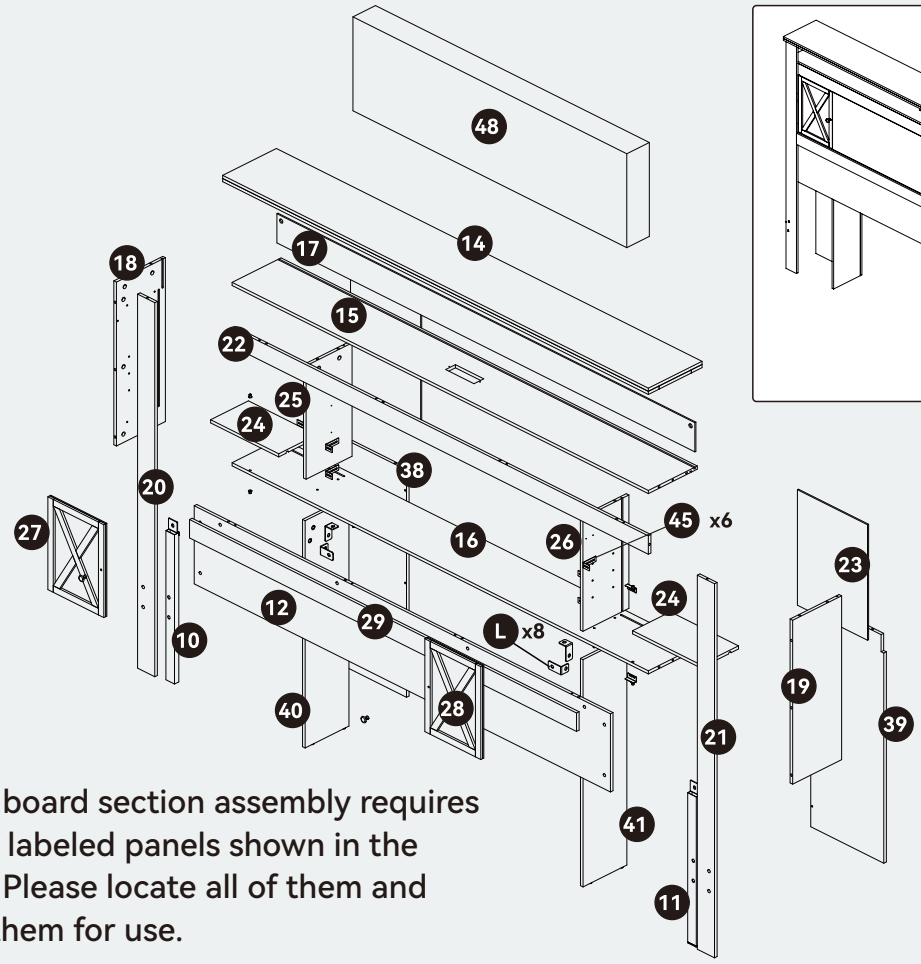

The headboard section assembly requires a total of labeled panels shown in the diagram. Please locate all of them and prepare them for use.

Note **Ensure all hardware components are accounted for before beginning assembly. Missing or damaged hardware should be reported to customer service for replacement.**

Hardware Accessory List

A		Ø8x12mm x18	R		Ø3.5x12mm x20
D		Ø8x20mm x8	S		Ø7x40mm x36
I		Ø5x40mm x10	T		Ø15x9.5mm x36
N		x4	X	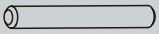	Ø6x40mm x14
O		Ø4.2x12mm x2	Y		x8
Q		Ø4x10mm x8	Z		x16

Step 1 Headboard Section

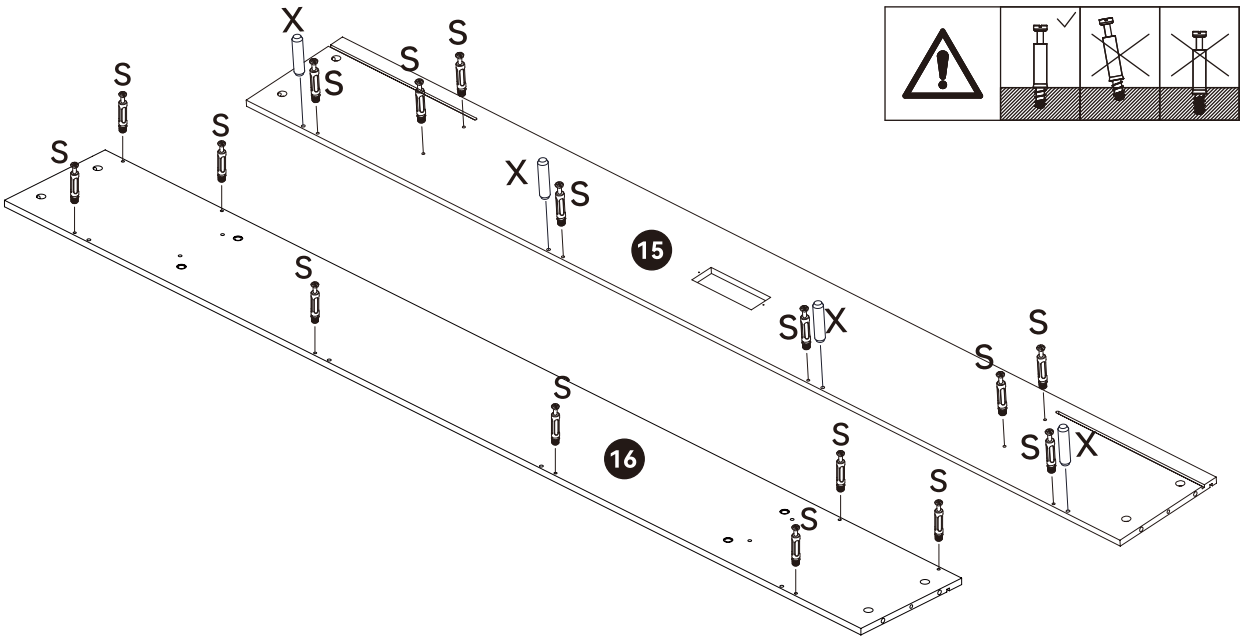

As shown, secure panel (15) with screw bolts (S) and insert wood dowels (X).
Secure panel (16) with screw bolts (S).

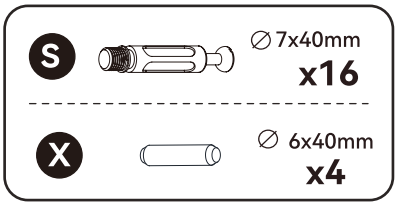

Step 2 Headboard Section

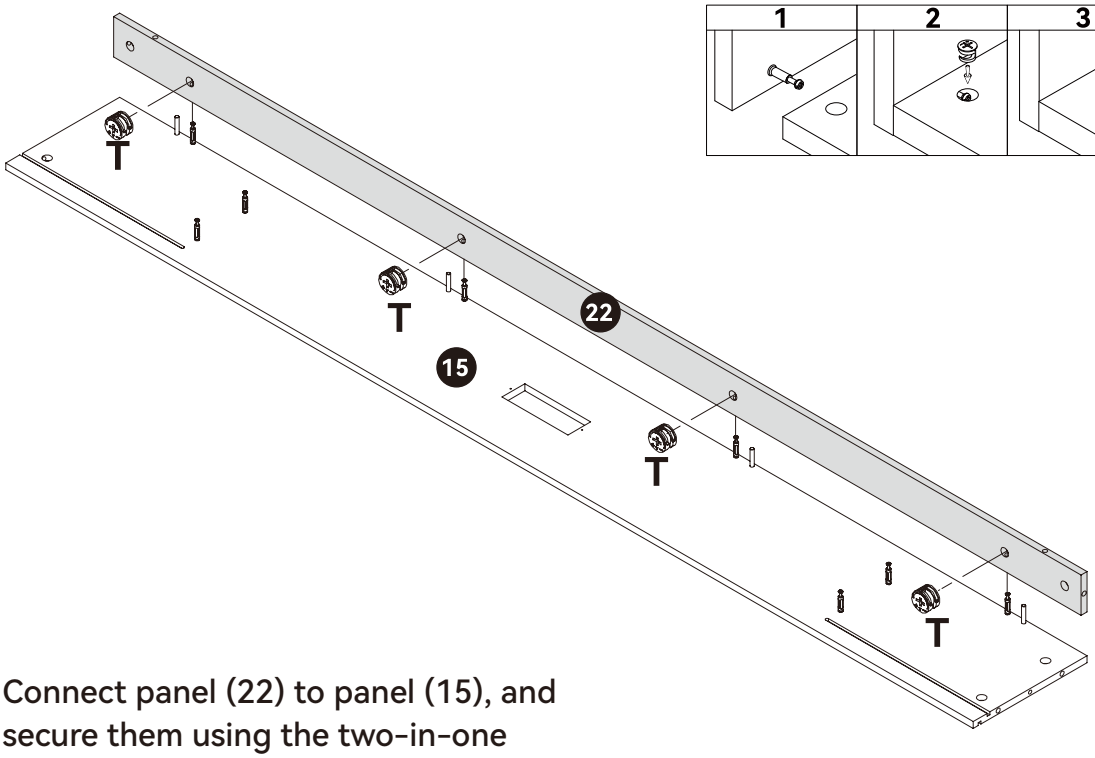

Connect panel (22) to panel (15), and secure them using the two-in-one connector (T).

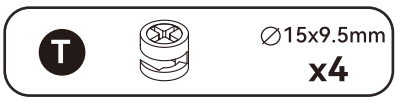

Step 3 Headboard Section

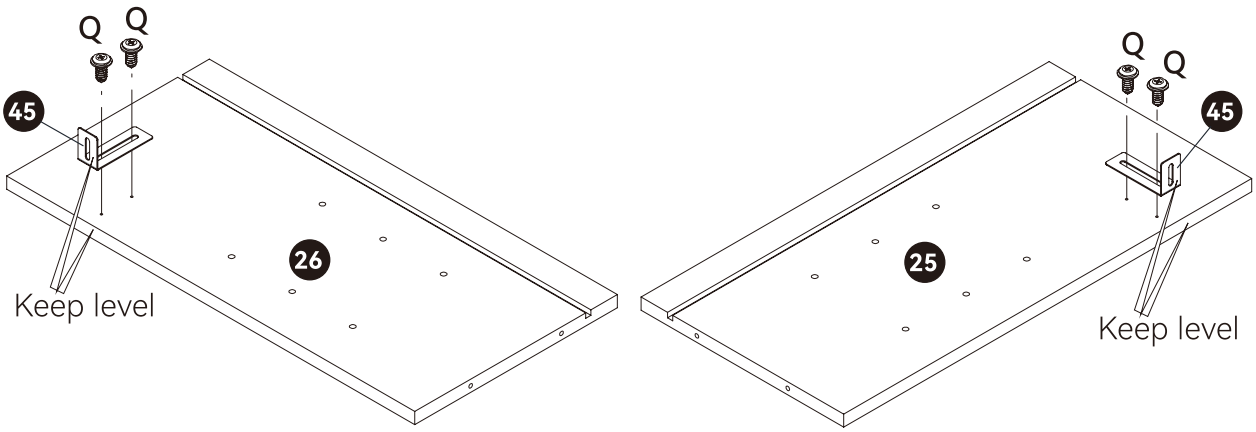

As shown, assemble panels (25) and (26) with metal plate (45), and secure them using screws (Q).

Q ∅4x10mm x4

Step 4 Headboard Section

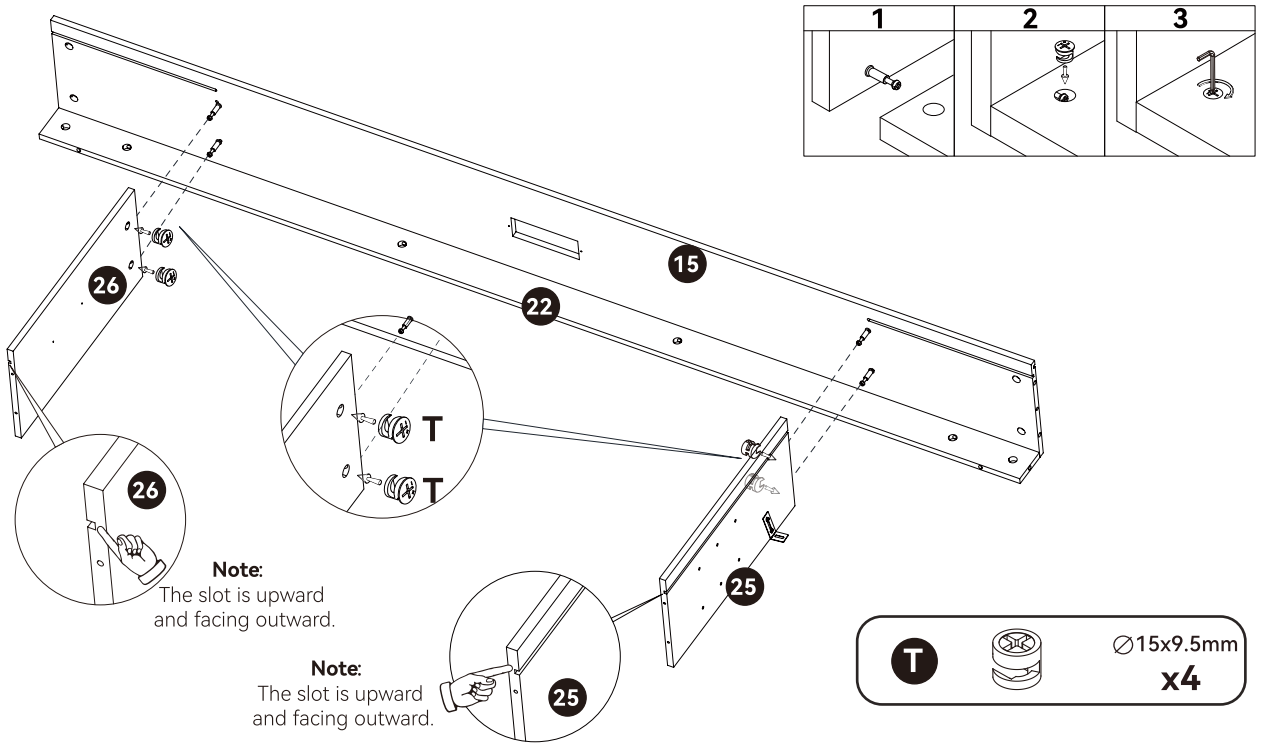

T ∅15x9.5mm x4

Connect panels (25) and (26) to panel (15), and secure them using the two-in-one connector (T). Note the direction of the grooves on panels (25) and (26).

Step 5 Headboard Section

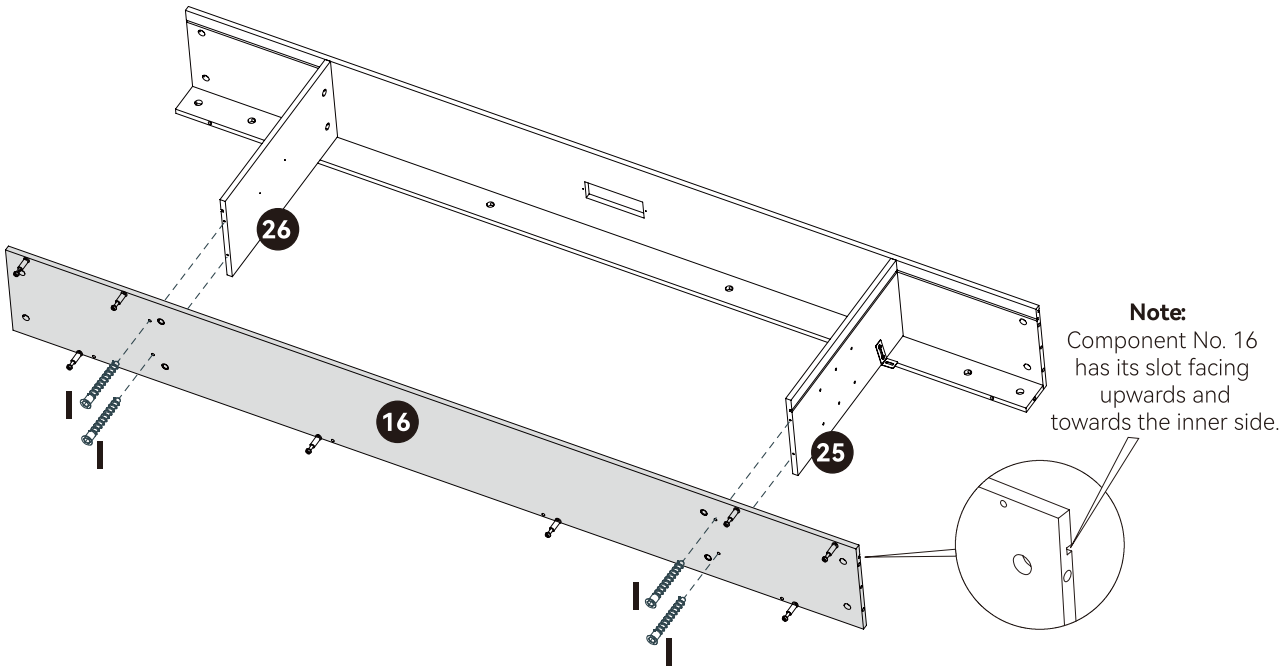

Connect panel (16) to panels (25) and (26), and secure them using screws (I).
Note the orientation of the groove on panel (16).

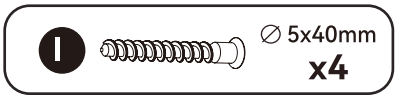

Step 6 Headboard Section

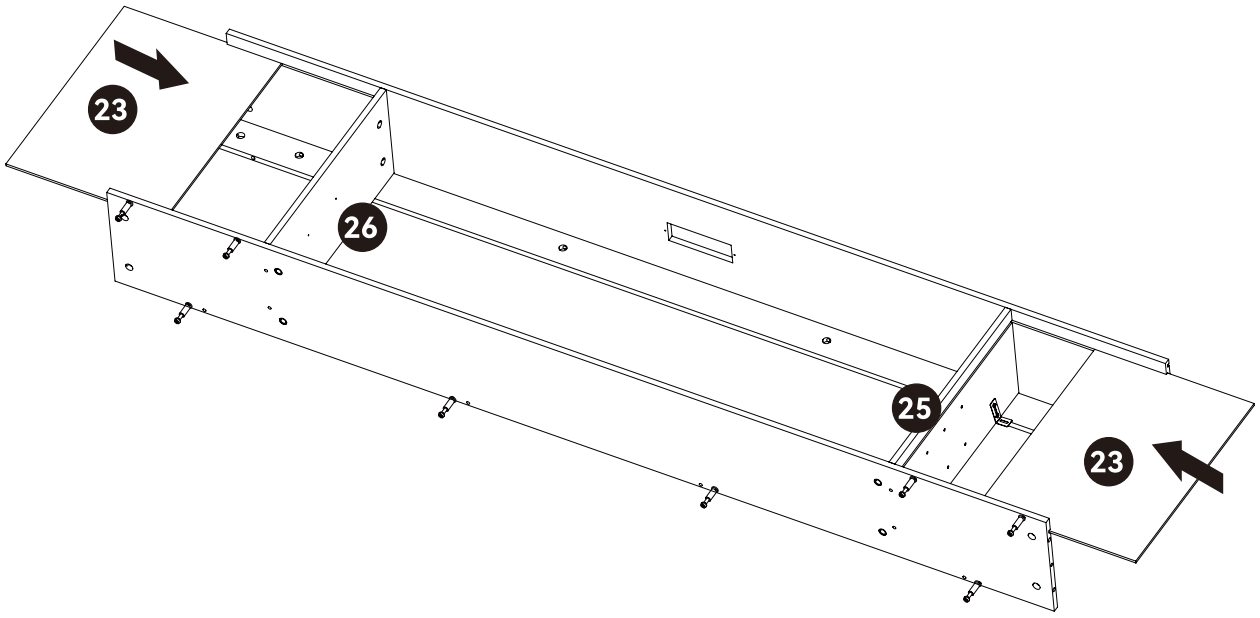

As shown, slide panel (23) into the grooves of panels (25) and (26) until it is fitted securely in place.

Step 7 Headboard Section

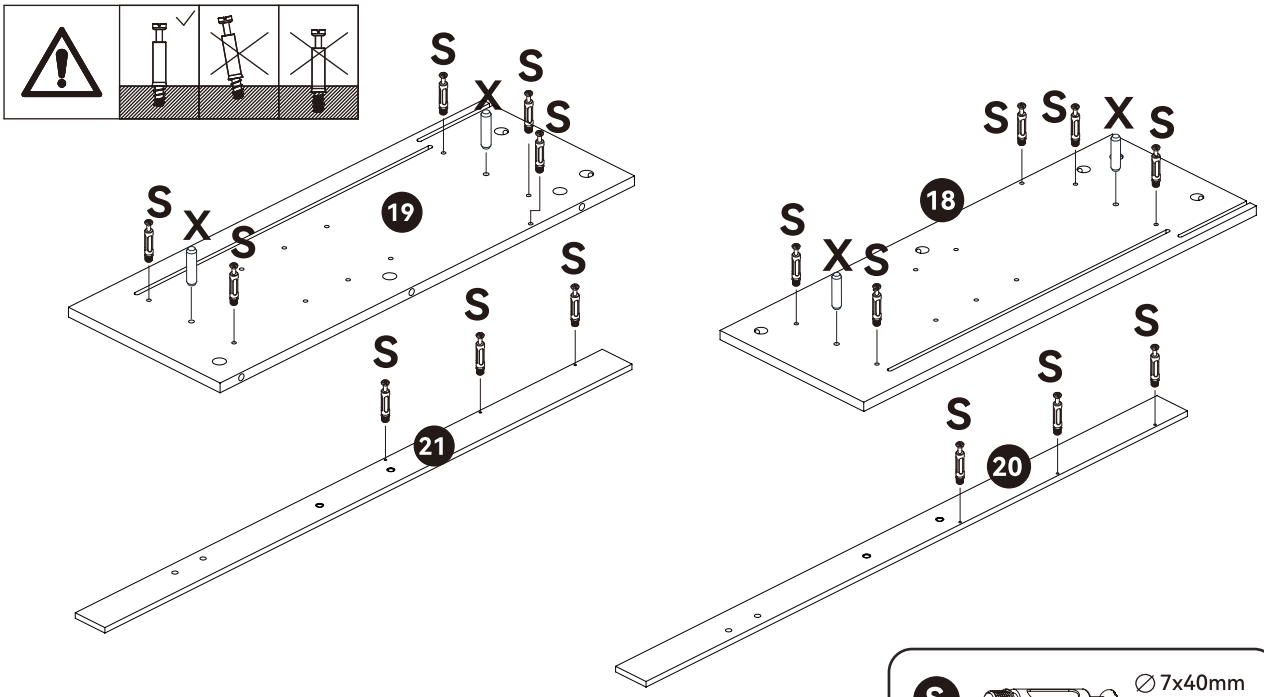

As shown, secure panels (18) and (19) with screw bolts (S) and insert wood dowels (X). Secure panels (20) and (21) with screw bolts (S).

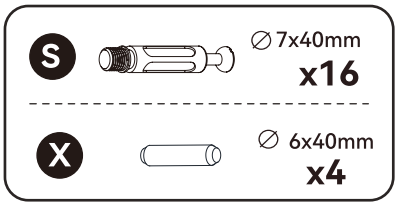

Step 8 Headboard Section

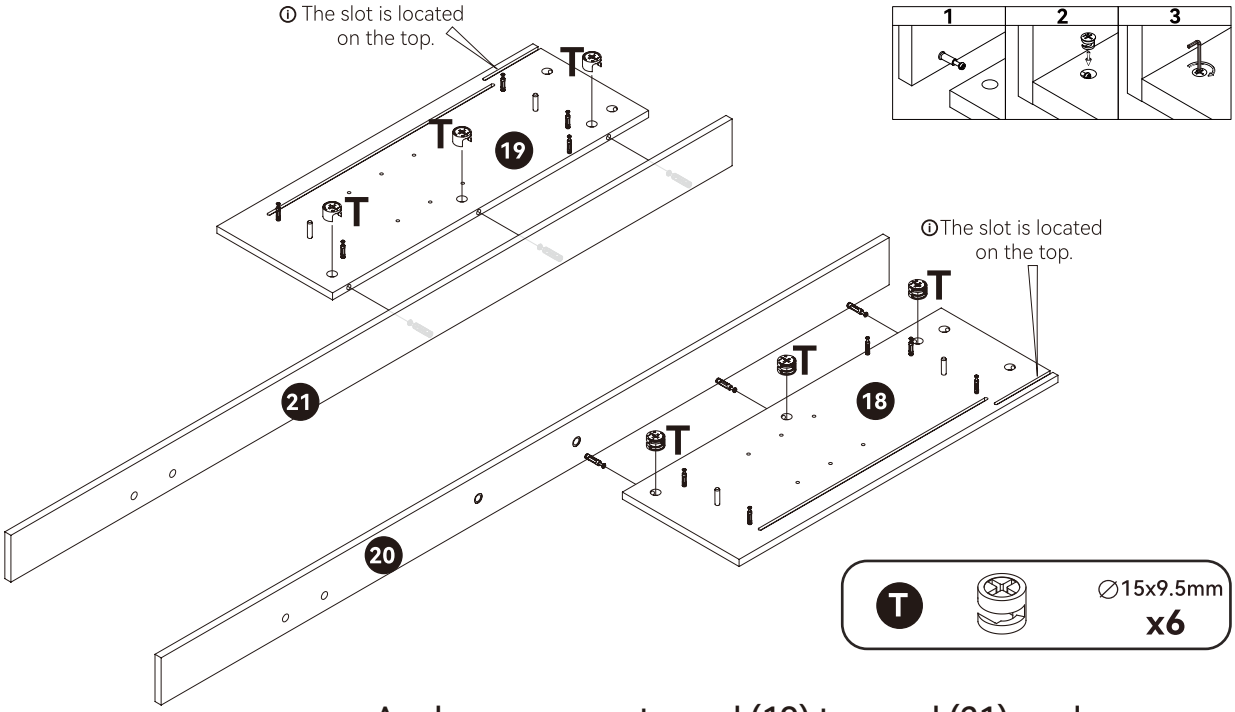

As shown, connect panel (19) to panel (21), and connect panel (18) to panel (20). Secure them using the two-in-one connectors (T).

Step 9 Headboard Section

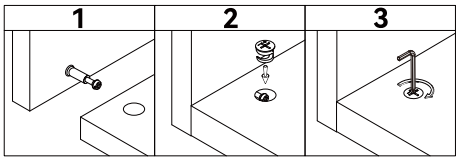

Step 1

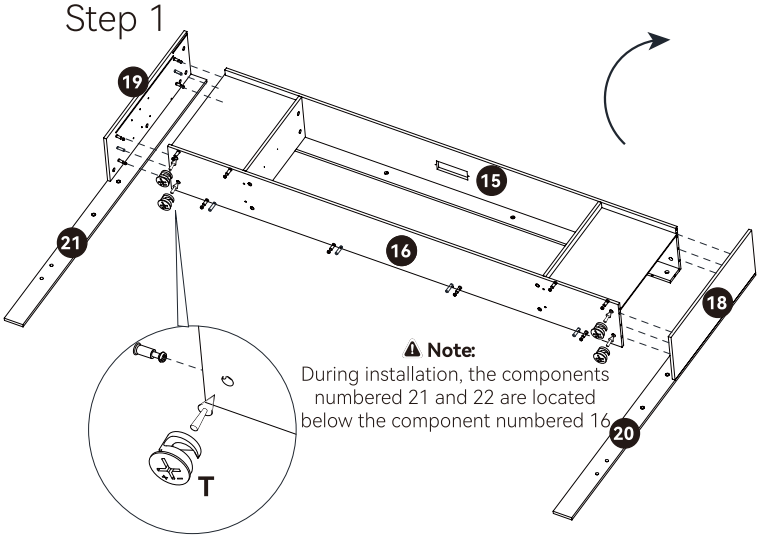

Step 2

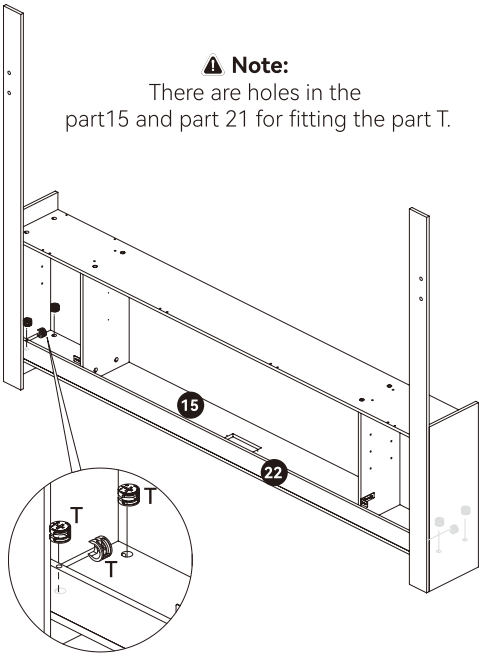

As shown, connect the assembled panels (19) and (18) to panels (15) and (16), and secure them using the two-in-one connectors (T).

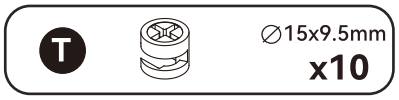

Step 10 Headboard Section

⚠ **Note:**
Place component No. 29 below component No. 16. Be careful not to submerge it completely into No. 16; make sure the screw holes are exposed.

Step 2

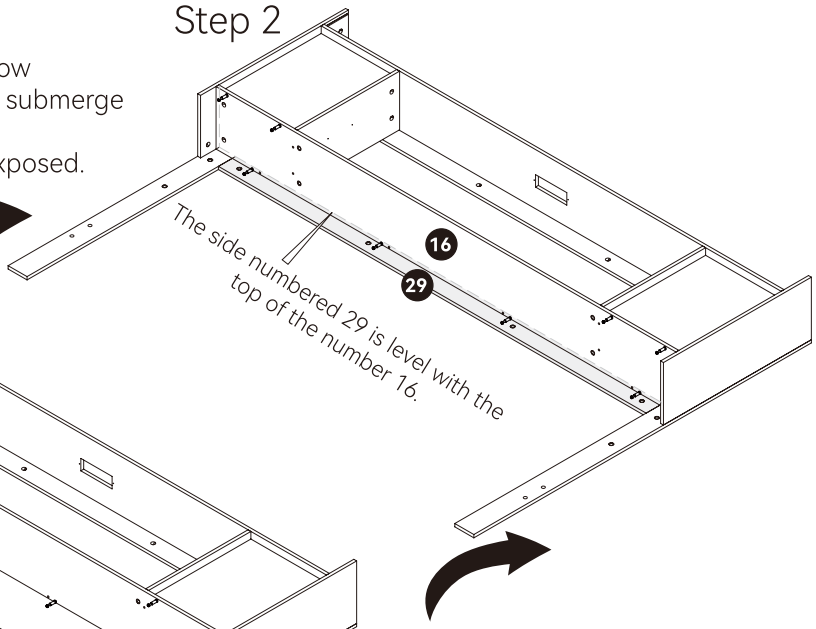

Step 1

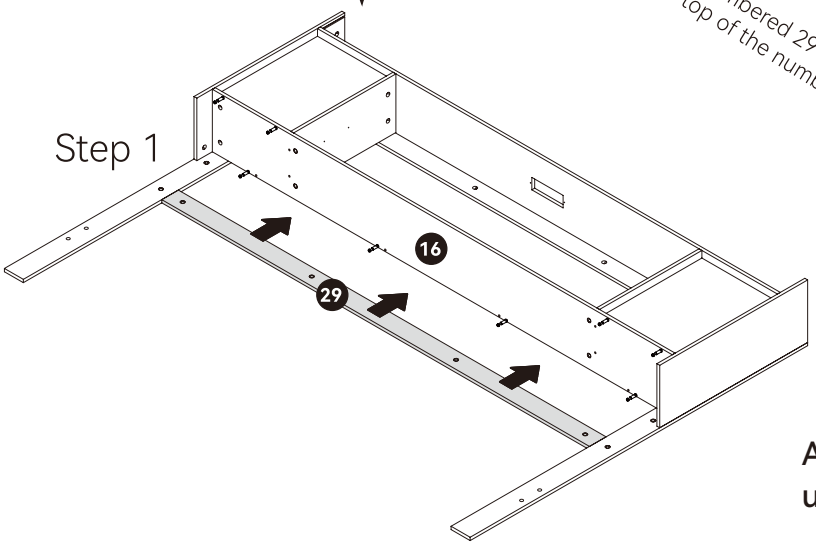

As shown, lay panel (29) flat underneath panel (16).

Step 11 Headboard Section

Insert wood dowels (X) into panel (12), then connect it to panel (16) and secure it using the two-in-one connector (T).

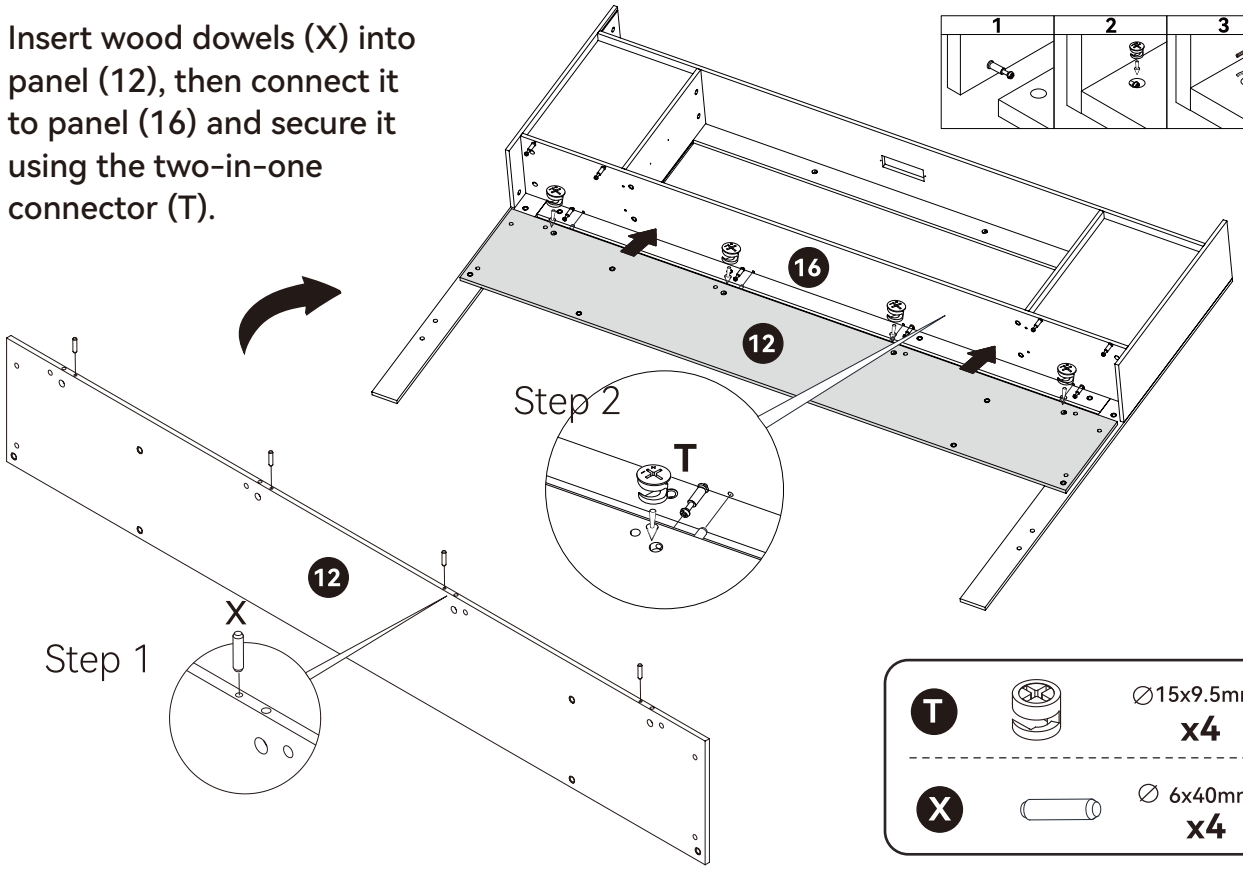

T		∅15x9.5mm x4
X		∅ 6x40mm x4

Step 12 Headboard Section

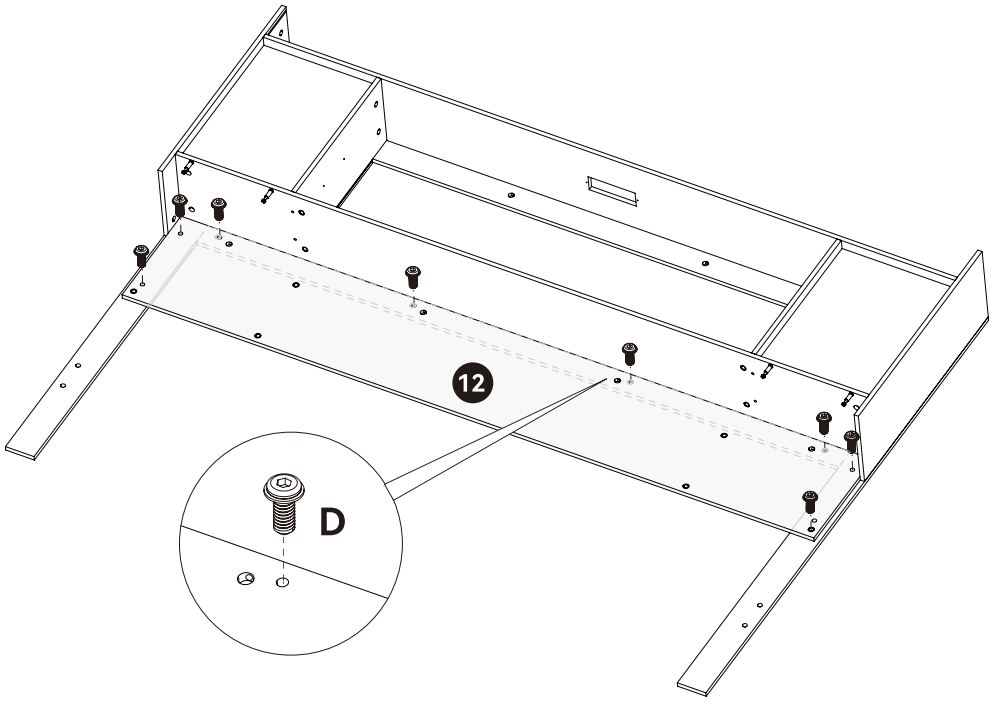

As shown, reinforce panel (12) again using screws (D).

D	(Colored Zinc)	∅8x20mm x8

Step 13 Headboard Section

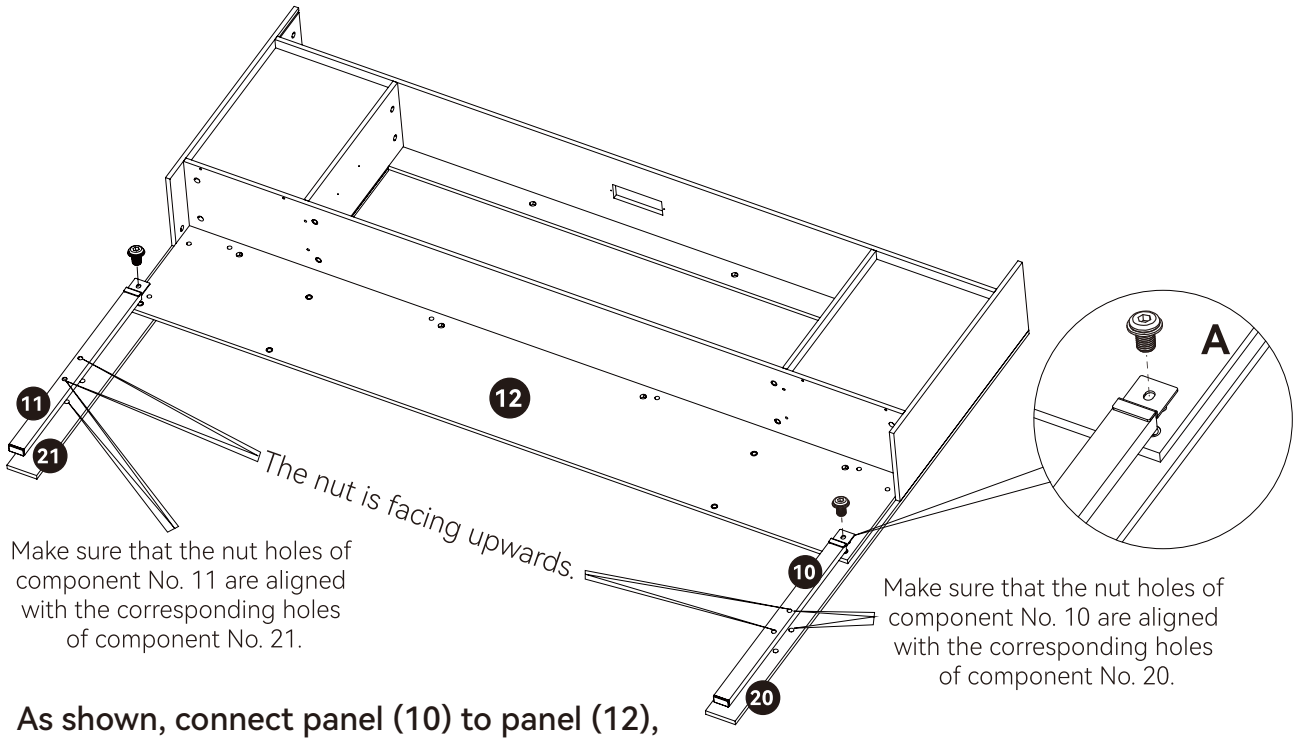

As shown, connect panel (10) to panel (12), and connect panel (11) to panel (12). Secure them using screws (A).

A		∅8x12mm x2

Step 14 Headboard Section

Connect (41), (40), (12), and (16) with brackets (L), and secure them using screws (A).

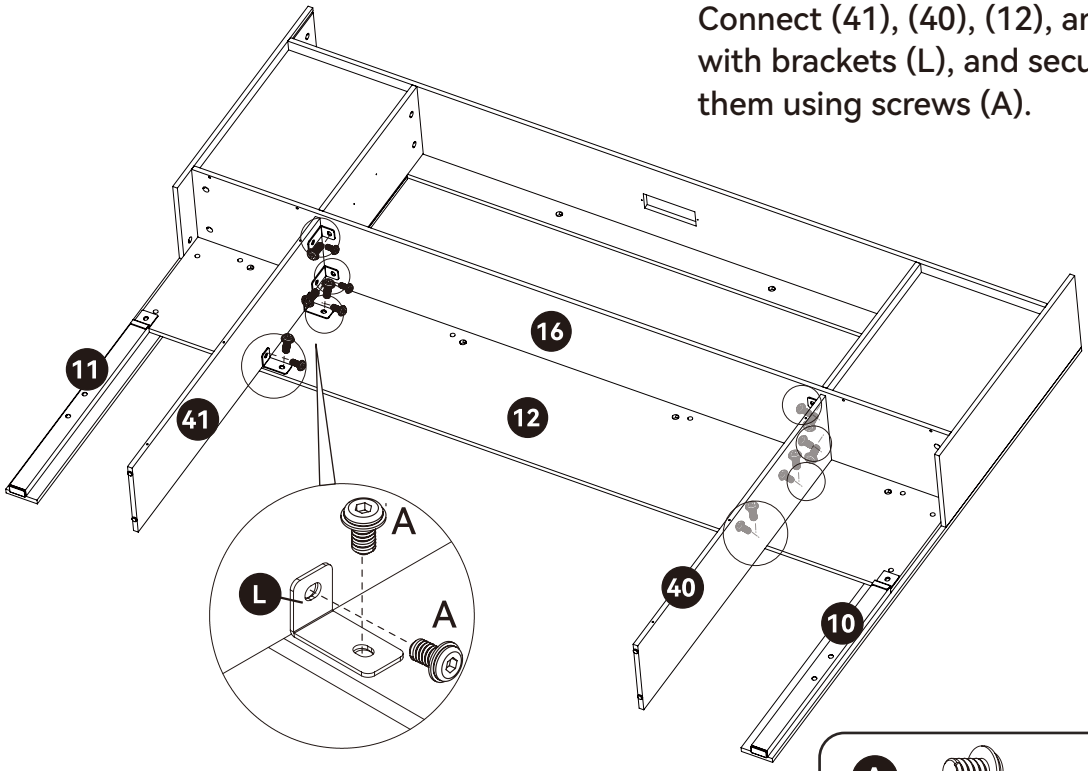

A		∅8x12mm x16

Step 15 Headboard Section

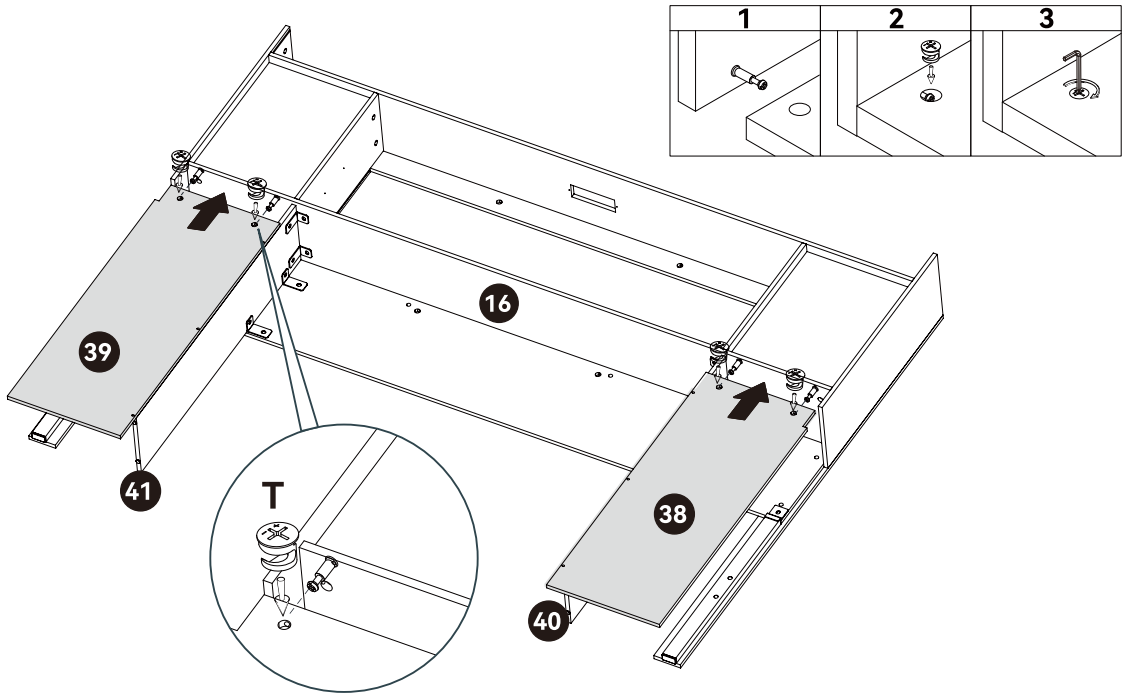

Connect (38) and (39) to panel (16), and secure them using the two-in-one connectors (T).

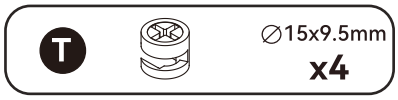

Step 16 Headboard Section

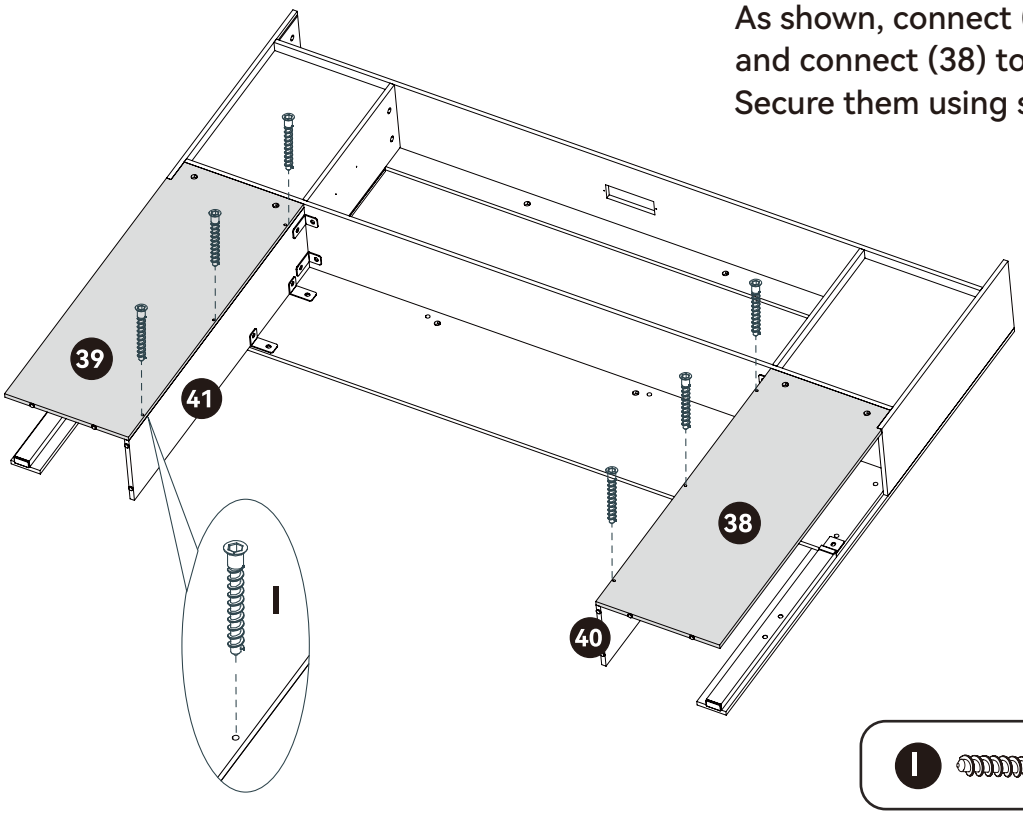

As shown, connect (39) to (41), and connect (38) to (40). Secure them using screws (I).

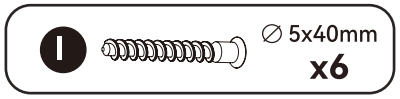

Step 17 Headboard Section

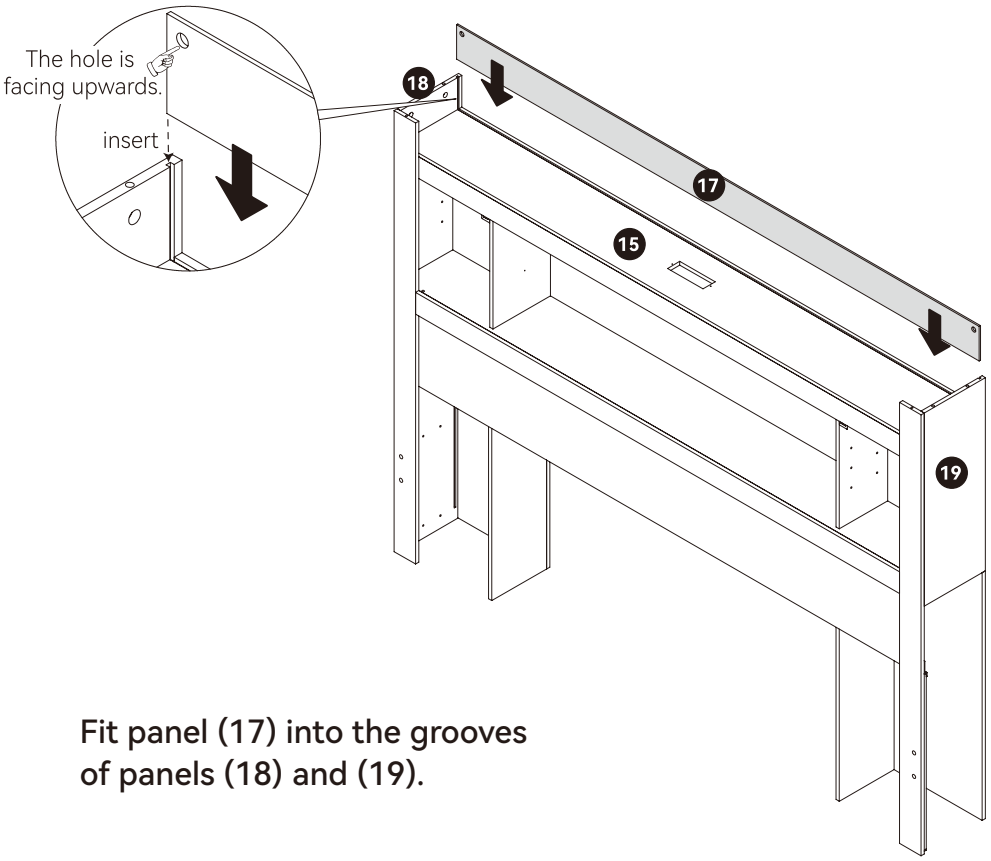

2 PERSON ASSEMBLE

Fit panel (17) into the grooves of panels (18) and (19).

Step 18 Headboard Section

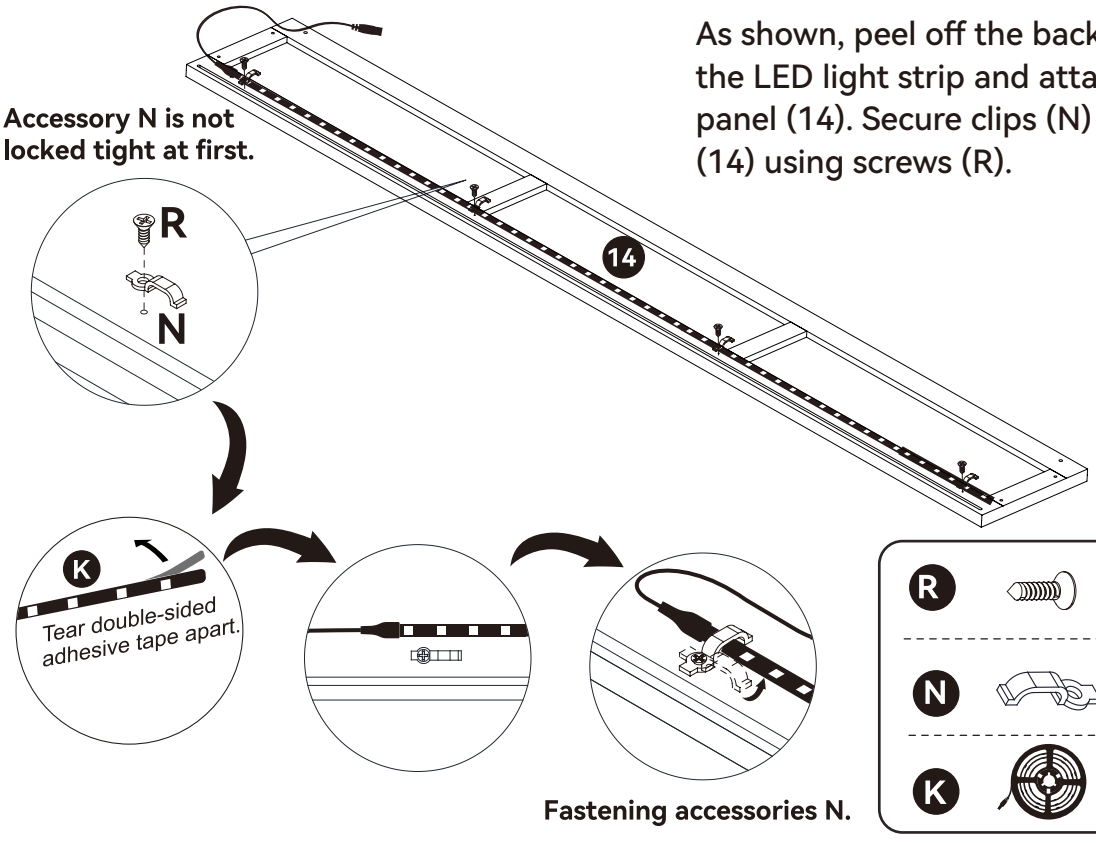

As shown, peel off the backing from the LED light strip and attach it to panel (14). Secure clips (N) to panel (14) using screws (R).

Fastening accessories N.

R		∅3.5x12mm x4
N		x4
K		x1

Step 19 Headboard Section

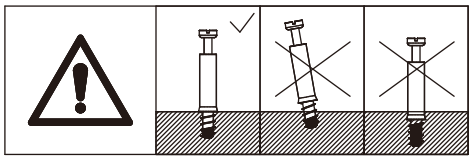

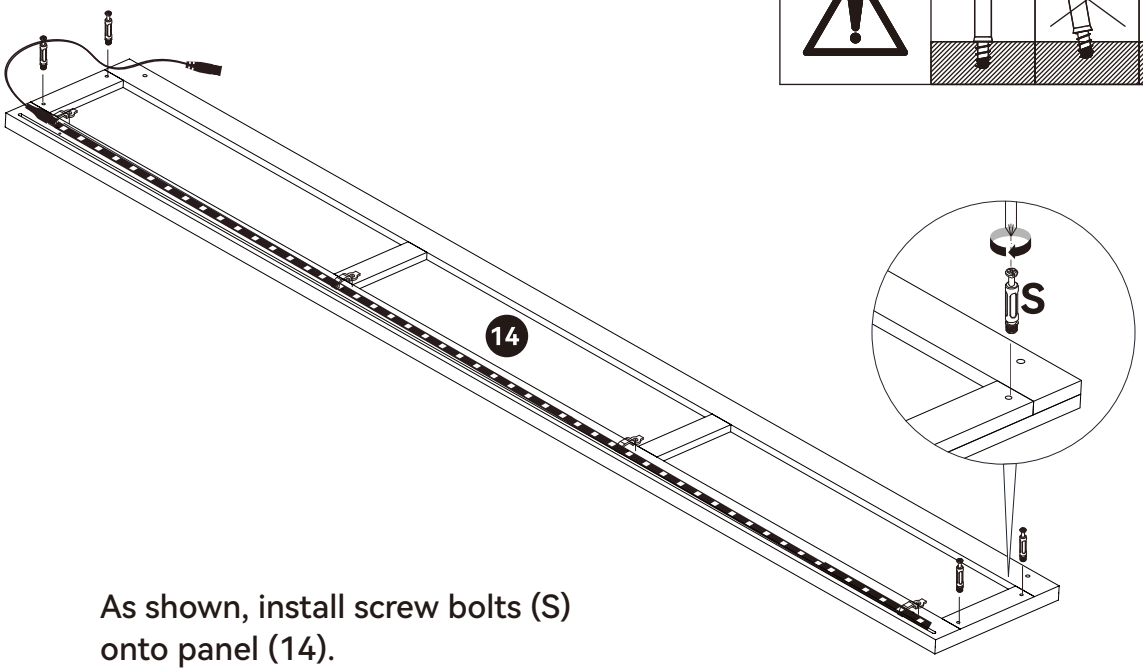

As shown, install screw bolts (S) onto panel (14).

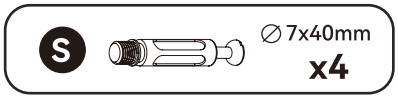

Step 20 Headboard Section

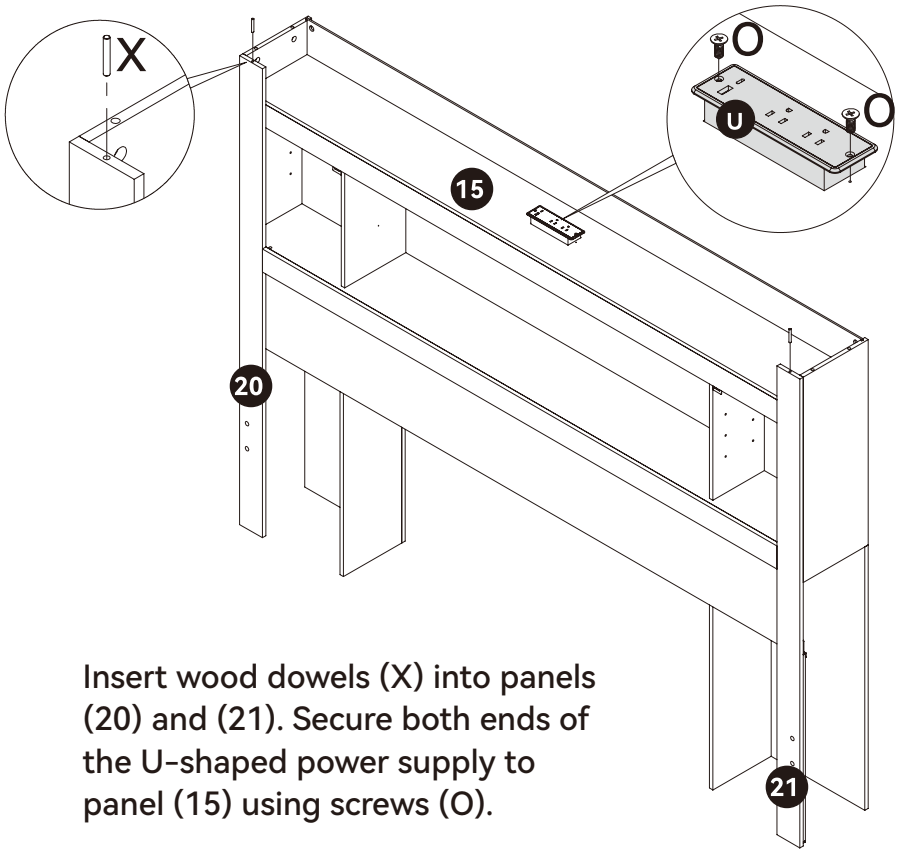

Insert wood dowels (X) into panels (20) and (21). Secure both ends of the U-shaped power supply to panel (15) using screws (O).

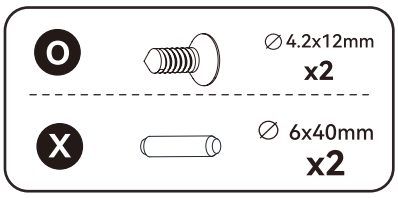

Step 21 Headboard Section

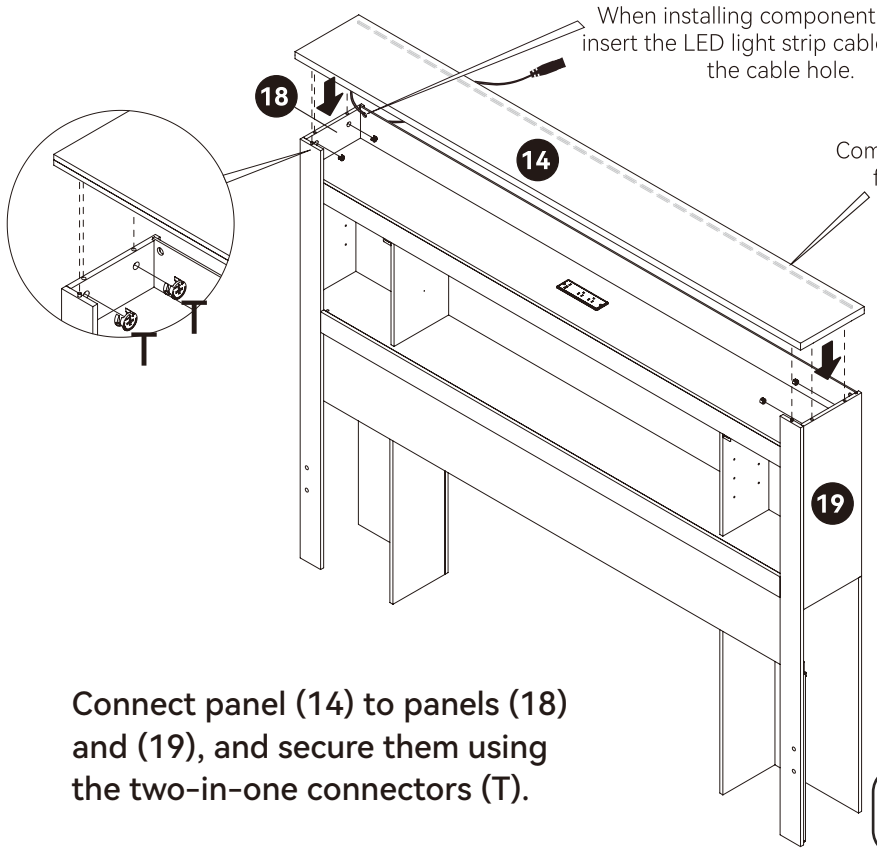

Connect panel (14) to panels (18) and (19), and secure them using the two-in-one connectors (T).

T ∅15x9.5mm x4

Step 22 Headboard Section

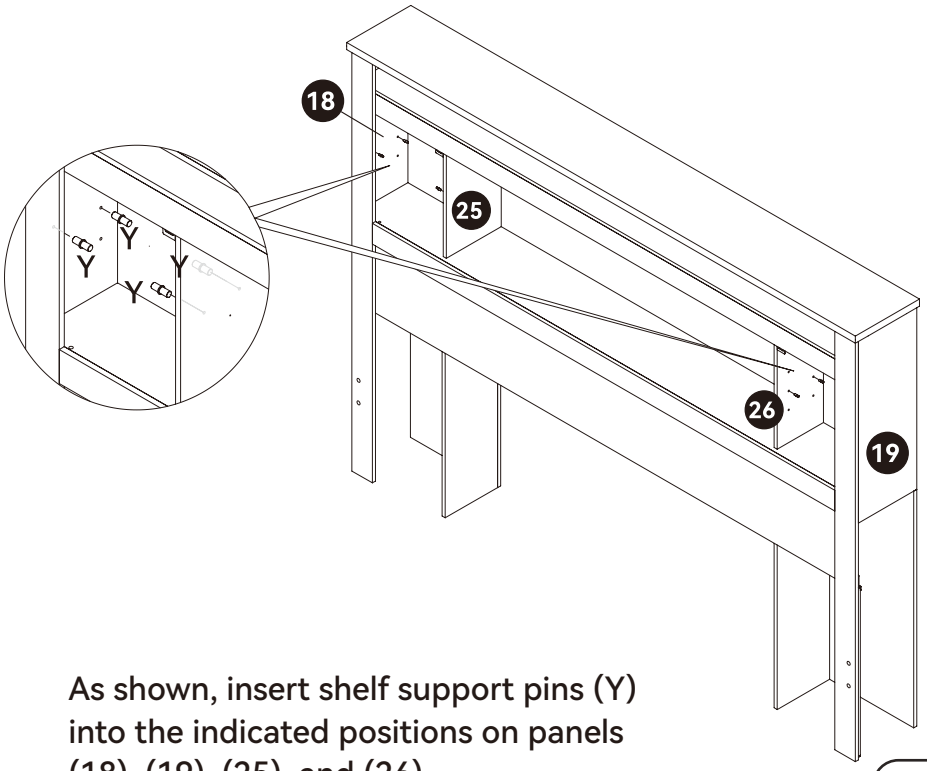

As shown, insert shelf support pins (Y) into the indicated positions on panels (18), (19), (25), and (26).

Y x8

Step 23 Headboard Section

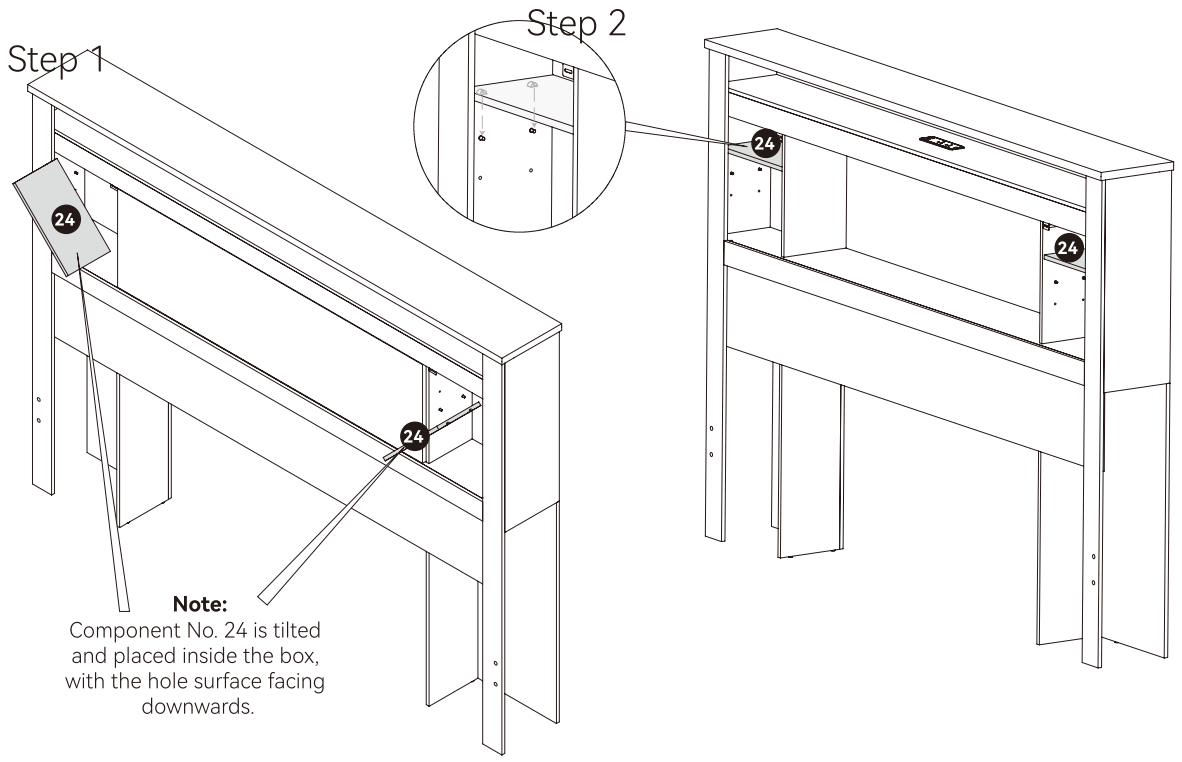

Place the two panels (24) diagonally into both sides of the headboard, and rest them on top of the shelf support pins.

Step 24 Headboard Section

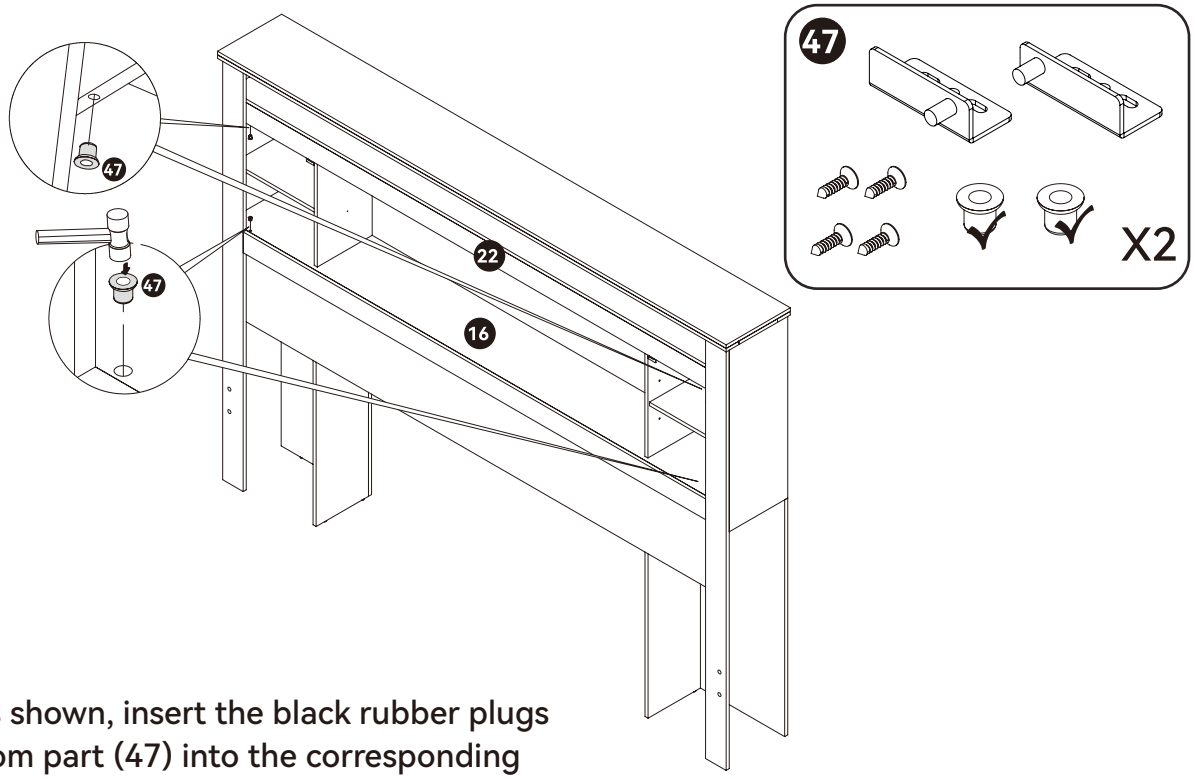

As shown, insert the black rubber plugs from part (47) into the corresponding holes on components (16) and (22).

Step 25 Headboard Section

⚠ NOTE:
Install doors (27) and (28) as shown. Insert the upper and lower pivot pins into the pre-installed rubber plug holes. Hold the upper pivot pin in place to prevent it from falling out, then insert the door frame onto the upper and lower pivot pins and tighten the screws. This step requires two people.

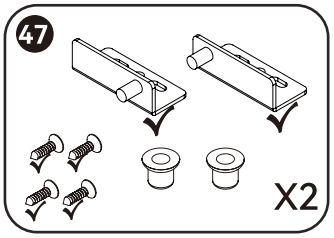

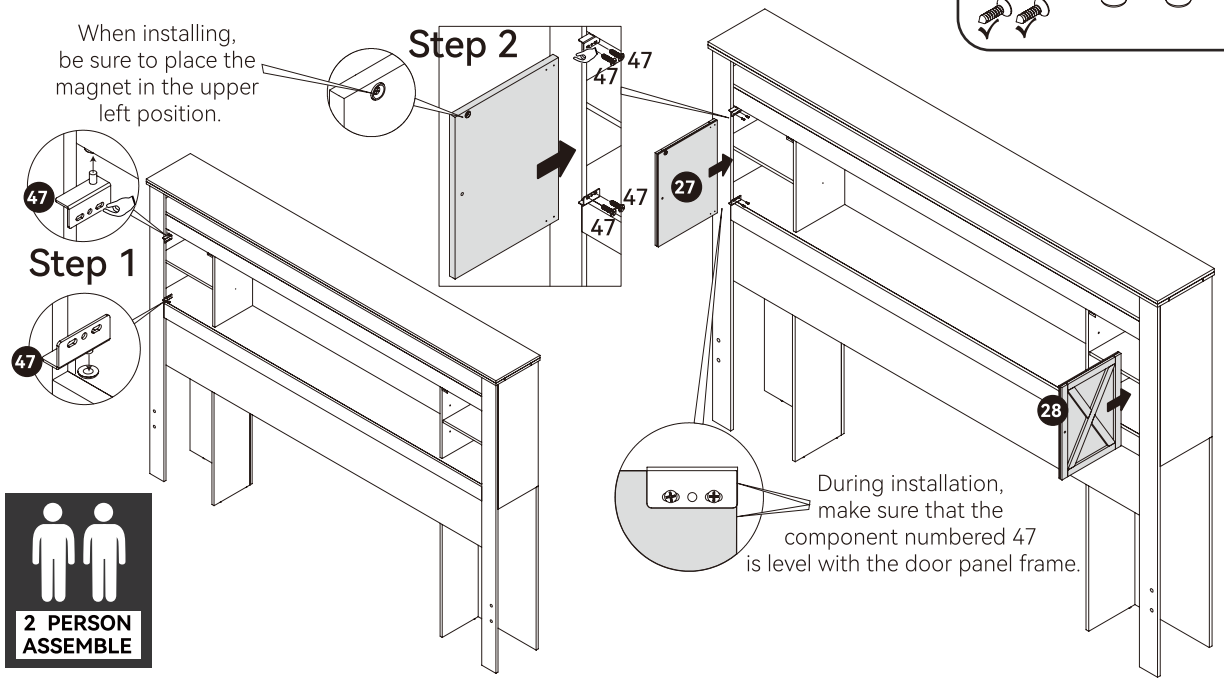

Step 26 Headboard Section

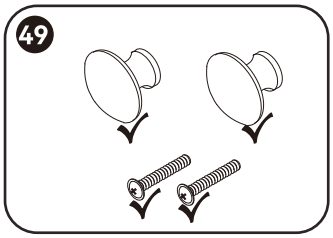

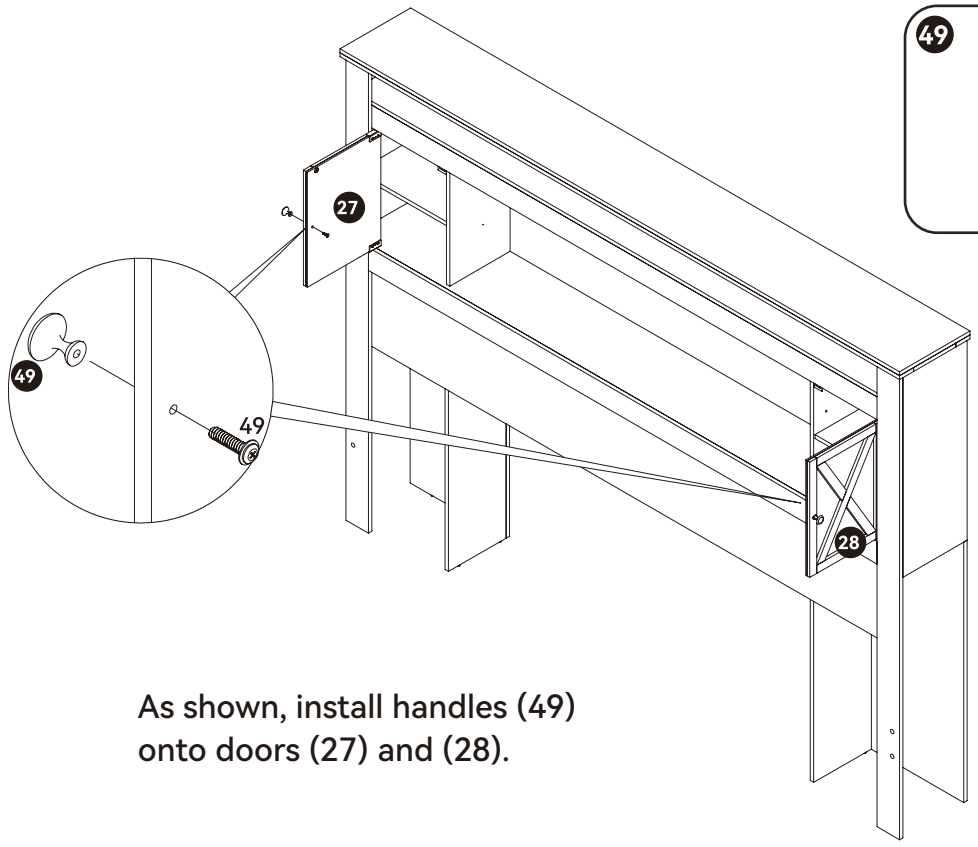

As shown, install handles (49) onto doors (27) and (28).

Step 27 Headboard Section

2 PERSON ASSEMBLE

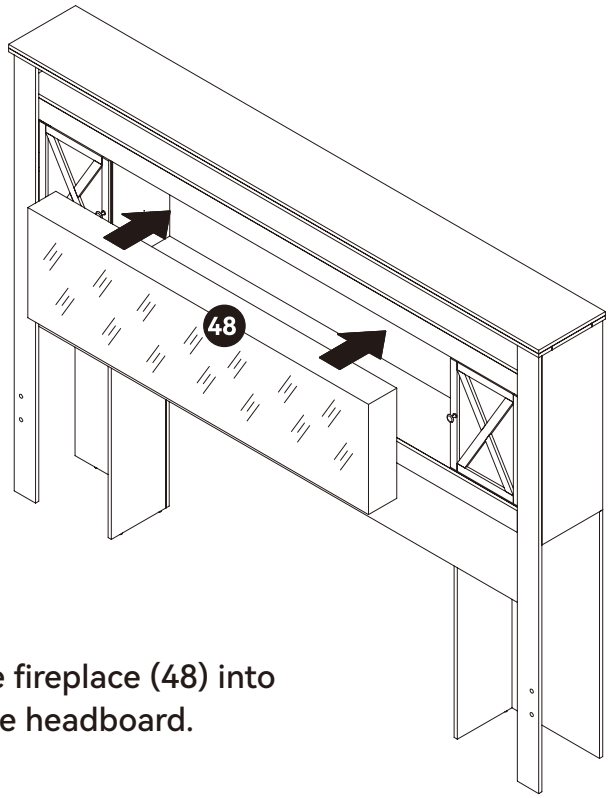

As shown, place fireplace (48) into the center of the headboard.

Step 28 Headboard Section

2 PERSON ASSEMBLE

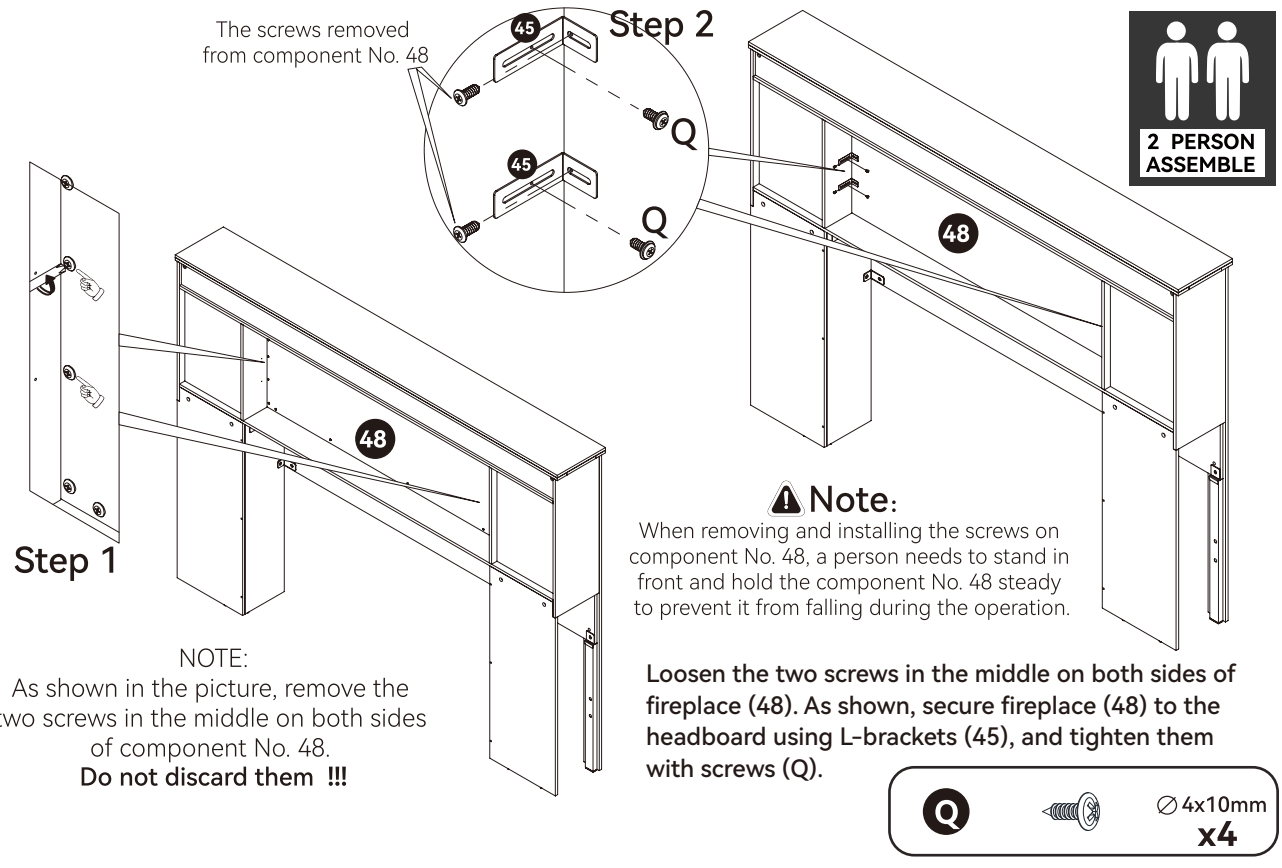

NOTE:
As shown in the picture, remove the two screws in the middle on both sides of component No. 48.
Do not discard them !!!

⚠Note:
When removing and installing the screws on component No. 48, a person needs to stand in front and hold the component No. 48 steady to prevent it from falling during the operation.

Loosen the two screws in the middle on both sides of fireplace (48). As shown, secure fireplace (48) to the headboard using L-brackets (45), and tighten them with screws (Q).

Q		∅4x10mm x4

Step 29 Headboard Section

As shown, secure panels (23) and (17) with plastic clips (Z), and tighten them using screws (R).

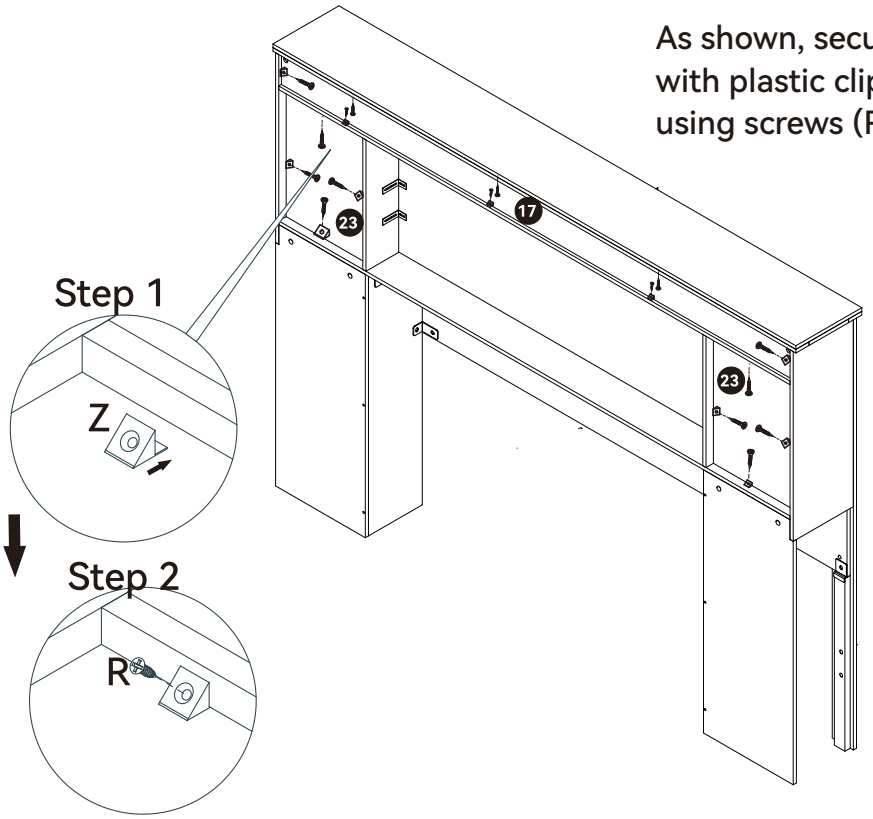

R		∅3.5x12mm x16
Z		x16

Frame Parts Section Installation

EN

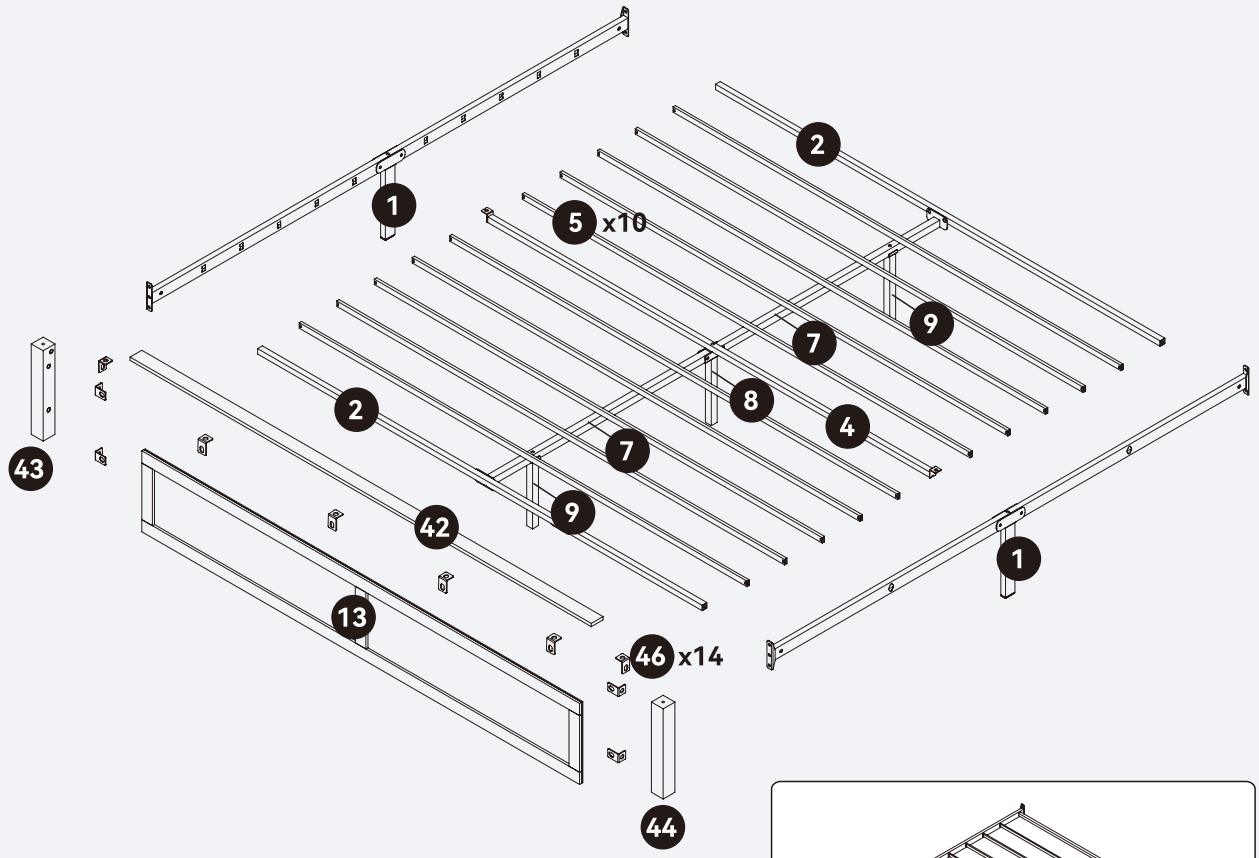

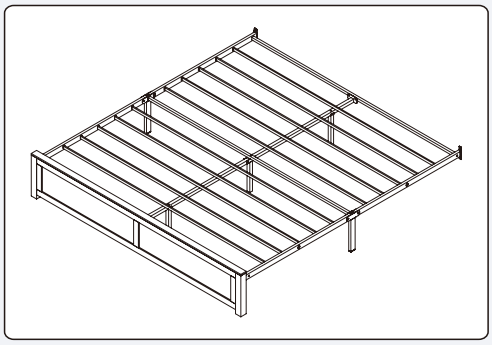

Hardware Accessory List

A		Ø8x12mm x14
C		Ø8x18mm x14
E	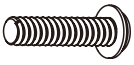	Ø8x30mm x8
F		Ø8x35mm x10
G		Ø8x40mm x2
H		Ø8x55mm x3
P		x20
AE		Ø8x40mm x2

The frame parts section assembly requires a total of labeled panels shown in the diagram. Please locate all of them and prepare them for use.

Note:

Ensure all hardware components are accounted for before beginning assembly. Missing or damaged hardware should be reported to customer service for replacement.

Step 30 Frame Parts Section

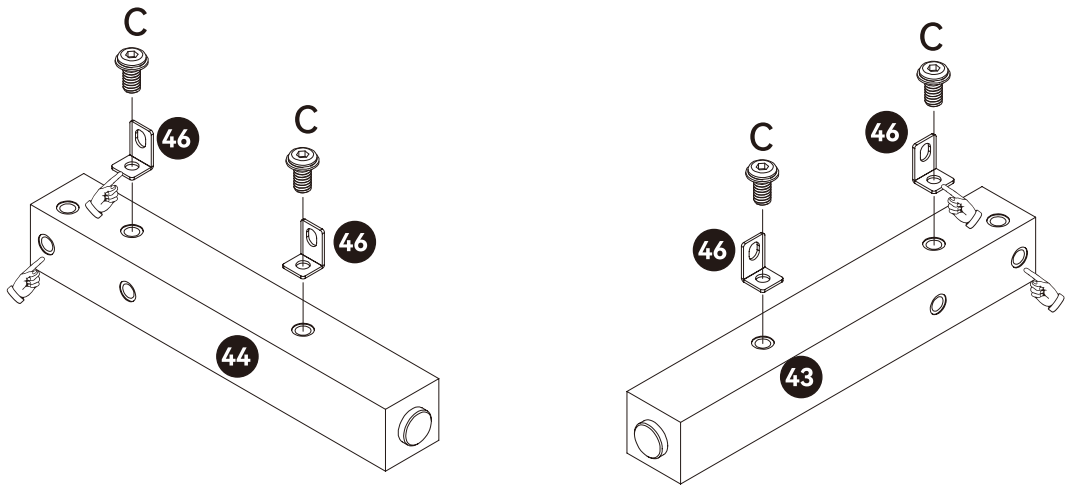

Note:
The short side of component No. 46 is facing the threaded hole surfaces of components No. 43 and No. 44.

Install L-brackets (46) onto parts (44) and (43), and secure them using screws (C).

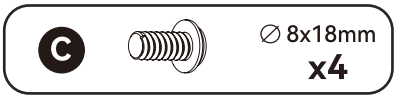

Step 31 Frame Parts Section

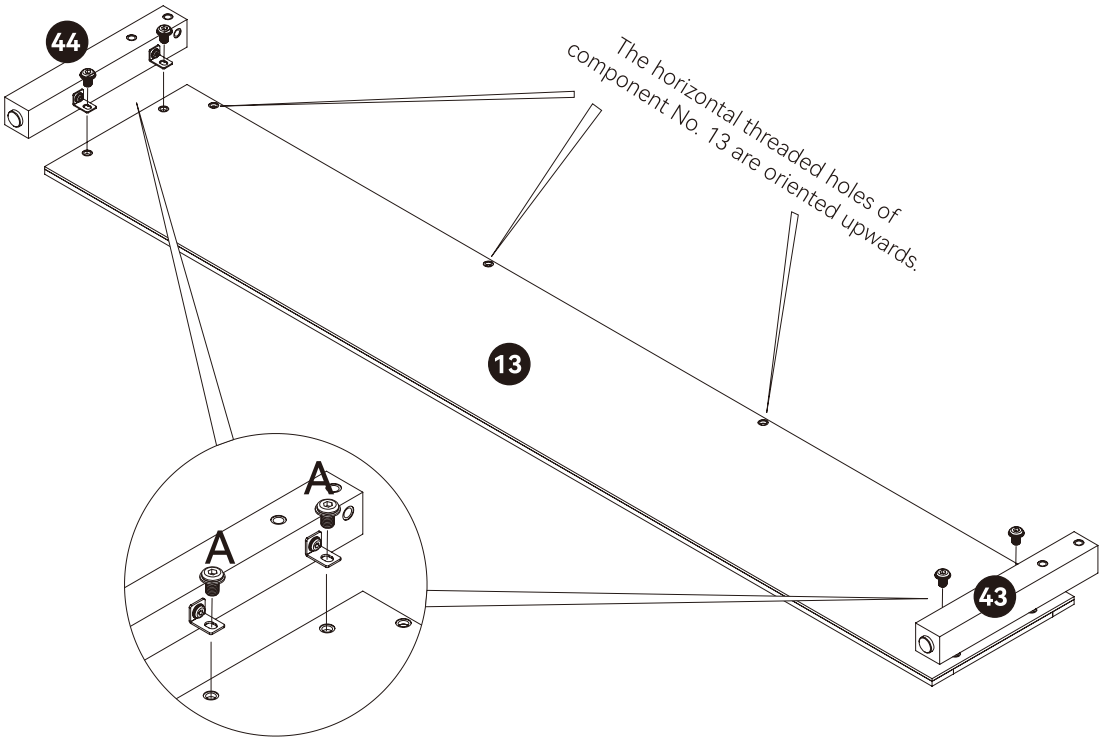

Install parts (44) and (43) onto both sides of panel (13), and secure them using screws (A).

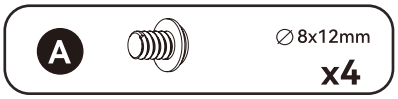

Step 32 Frame Parts Section

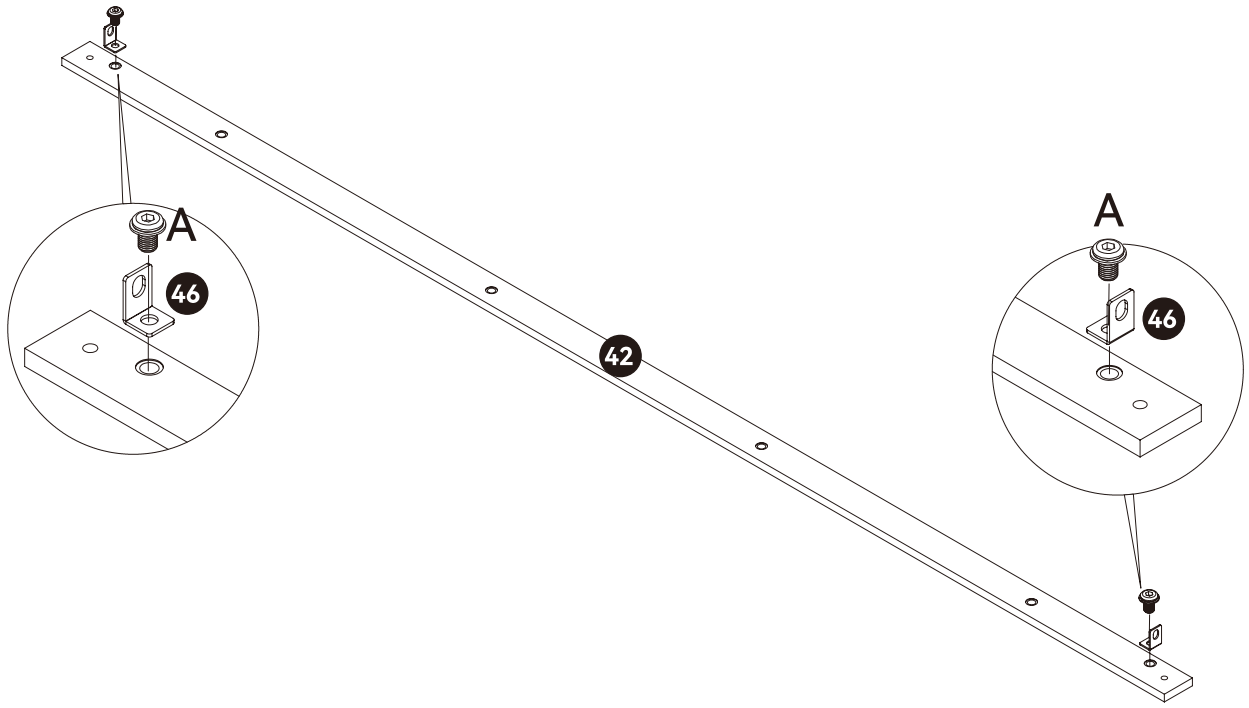

Install L-brackets (46) onto both ends of part (42) using screws (A).

A ⌀8x12mm x2

Step 33 Frame Parts Section

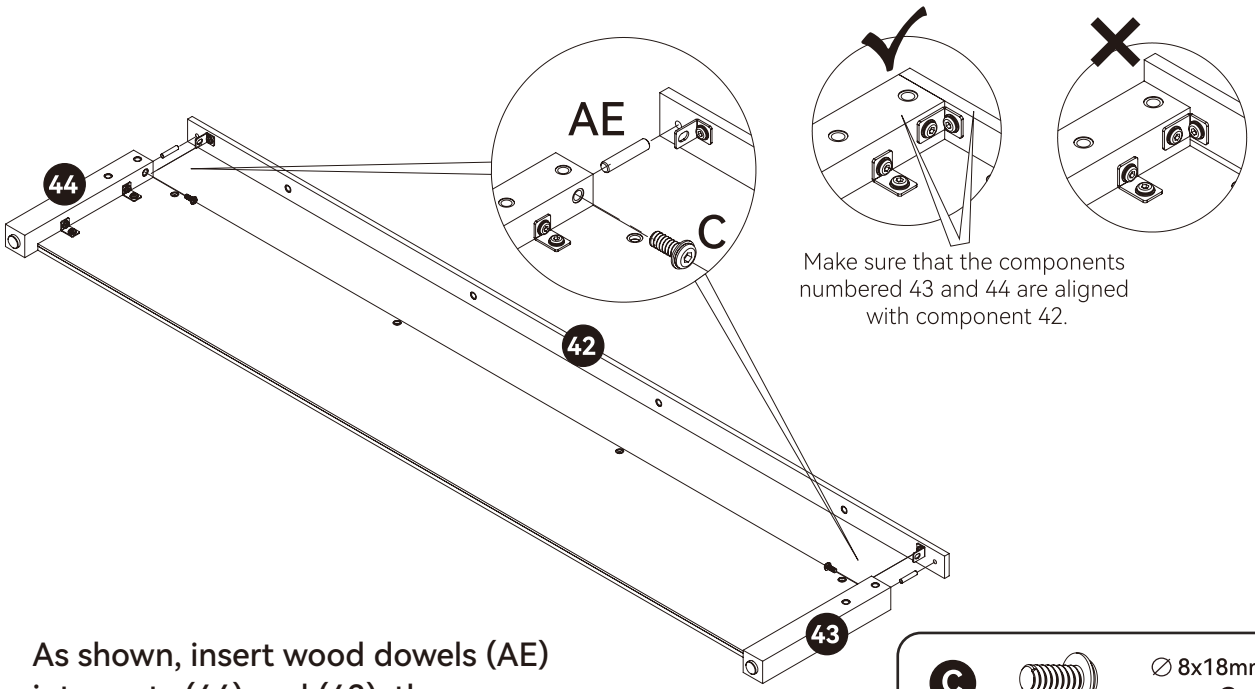

Make sure that the components numbered 43 and 44 are aligned with component 42.

As shown, insert wood dowels (AE) into parts (44) and (43), then assemble them with part (42) and secure them using screws (C).

C ⌀8x18mm x2

AE ⌀8x40mm x2

Step 34 Frame Parts Section

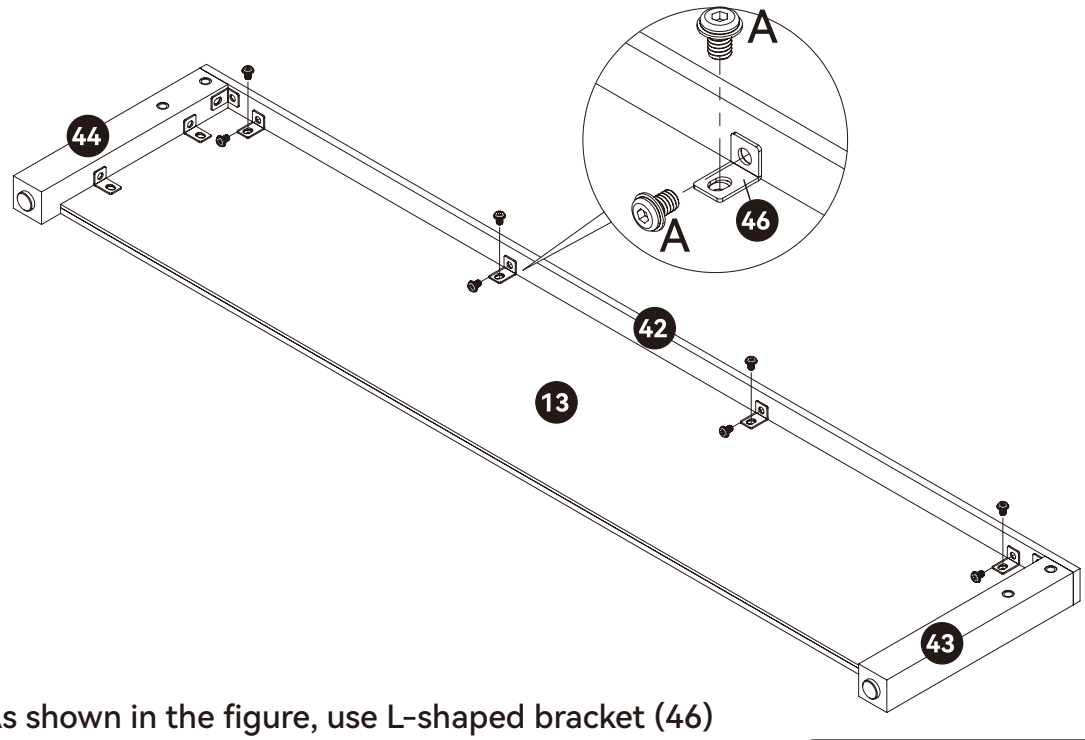

As shown in the figure, use L-shaped bracket (46) to secure panels (13) and (42), and tighten with screw (A).

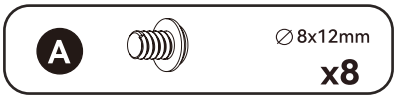

Step 35 Frame Parts Section

Be careful not to pinch yourself when opening the brackets.



x2

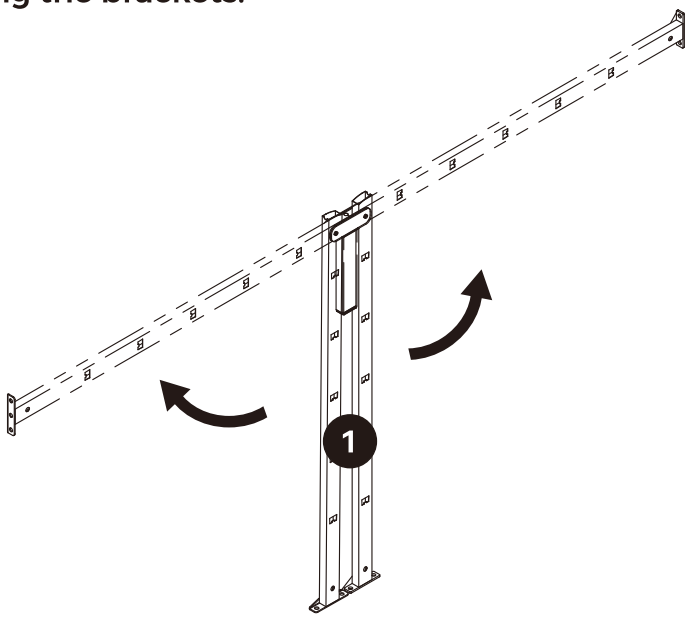

Open part (1). Repeat this step twice.

Step 36 Frame Parts Section

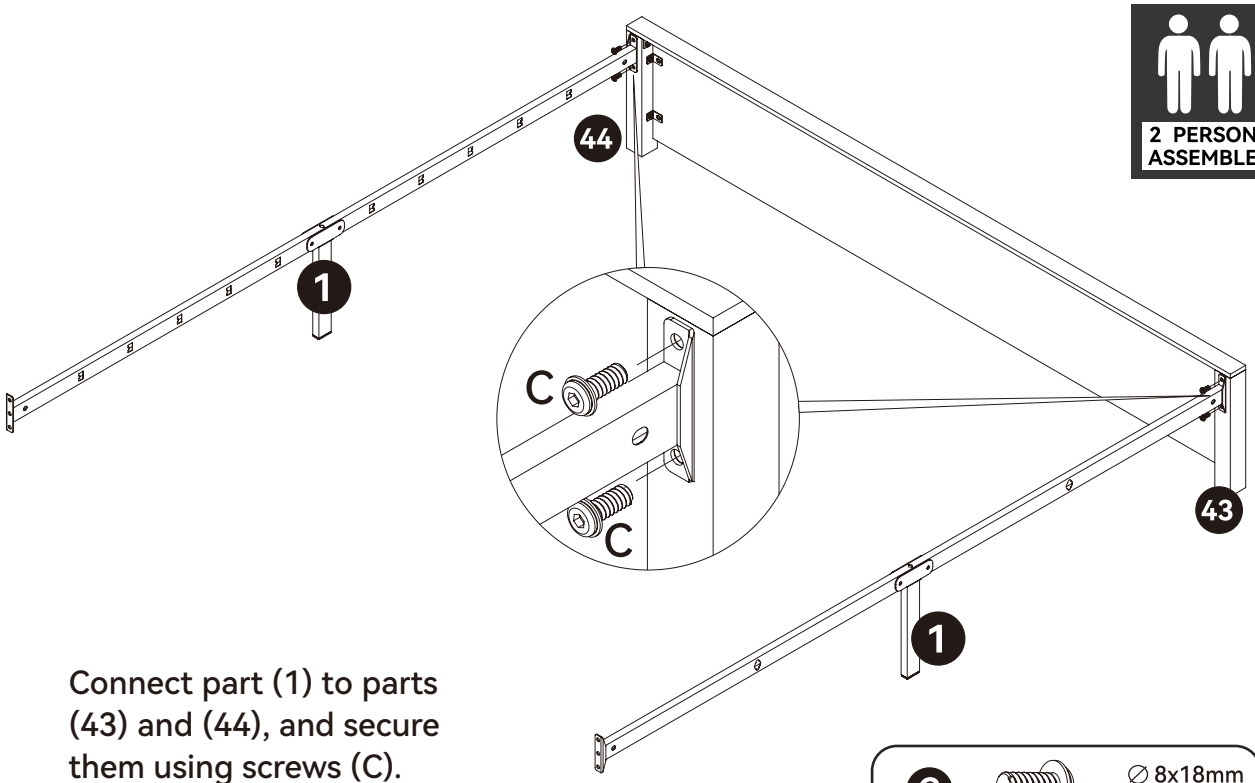

Connect part (1) to parts (43) and (44), and secure them using screws (C).

C ∅ 8x18mm x4

Step 37 Frame Parts Section

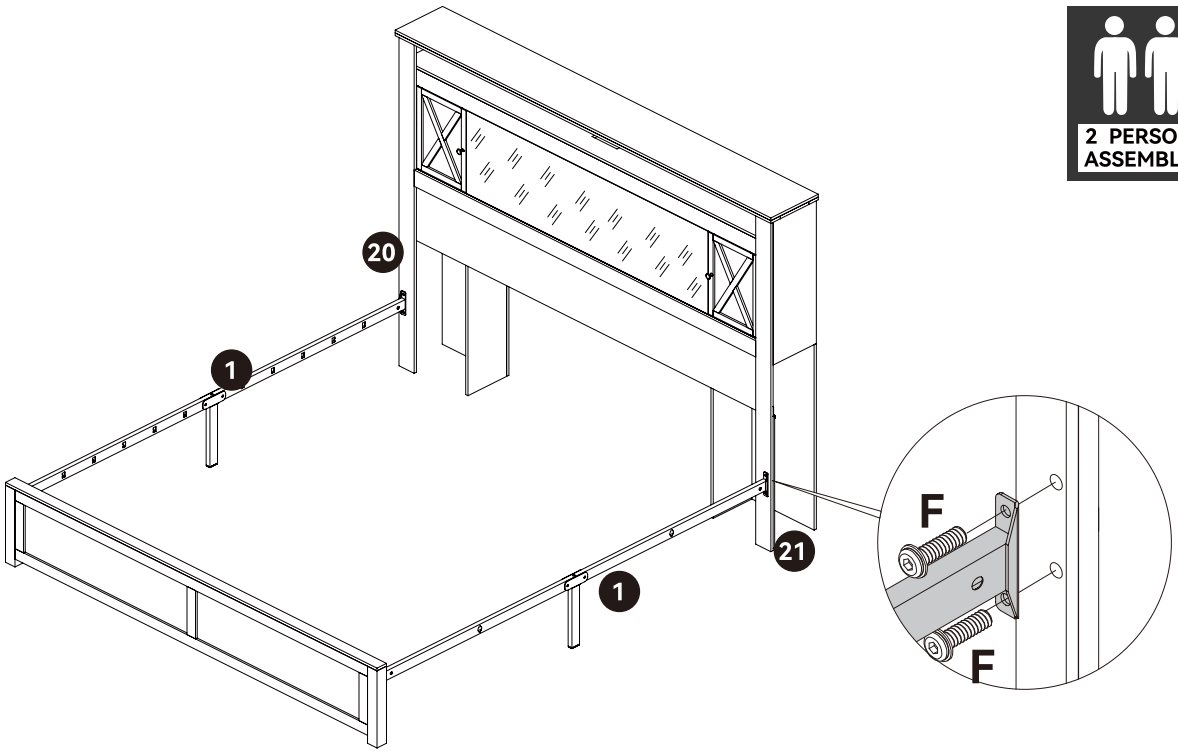

Connect part (1) to panels (20) and (21), and secure them using screws (F).

F (Colored Zinc) ∅ 8x35mm x4

Step 38 Frame Parts Section

As shown, connect the two tubes (2) to tube (1), and secure them using screws (F).

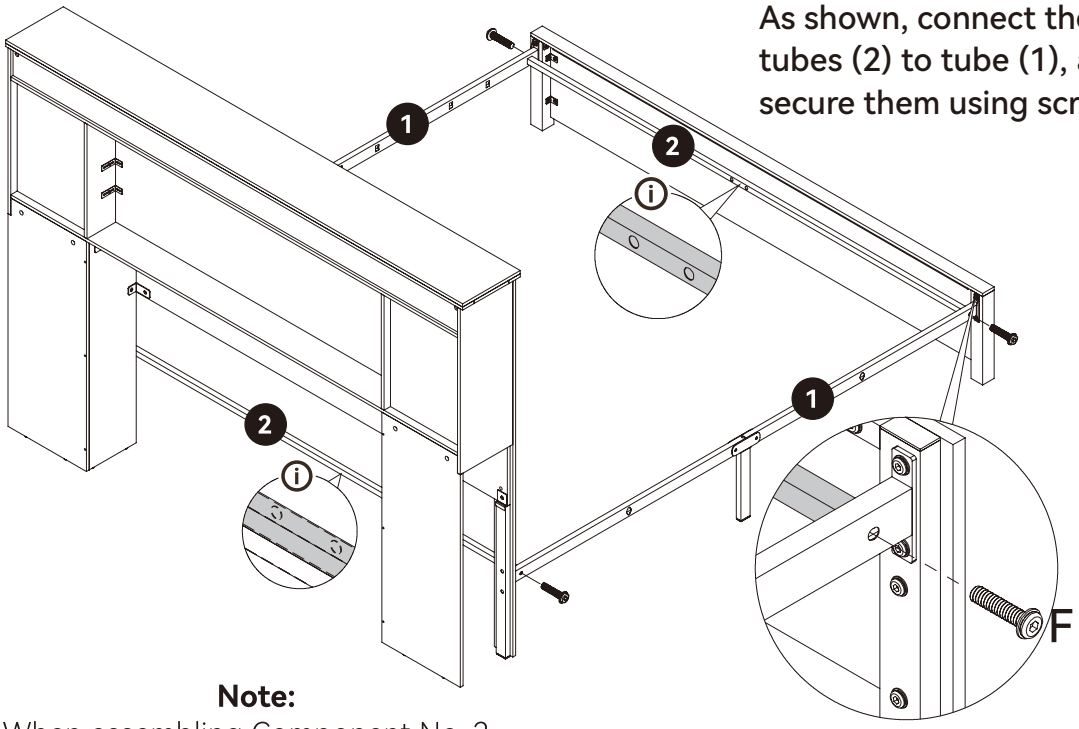

Note:
When assembling Component No. 2, the head of the nut needs to be installed inward.

F (Colored Zinc) ∅8x35mm x4

Step 39 Frame Parts Section

As shown, connect part (7) to parts (9) and (8), and secure them using screws (F) and (G).

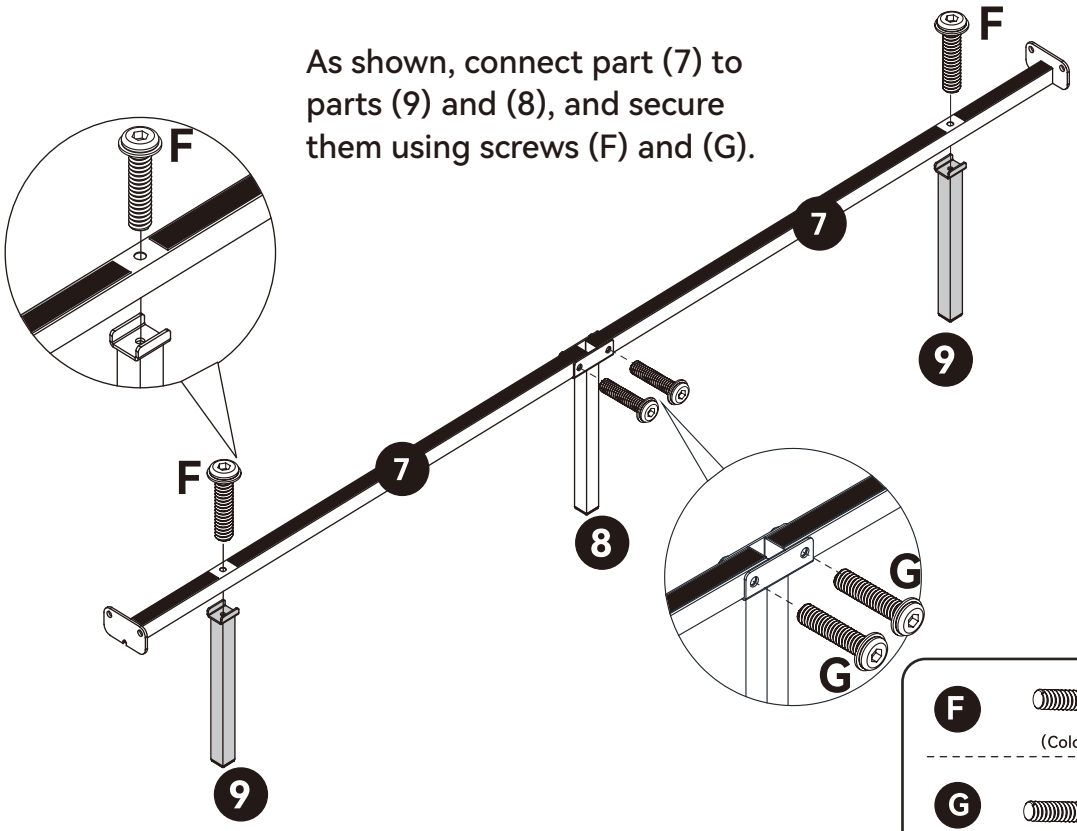

F (Colored Zinc) ∅8x35mm x2

G ∅8x40mm x2

Step 40 Frame Parts Section

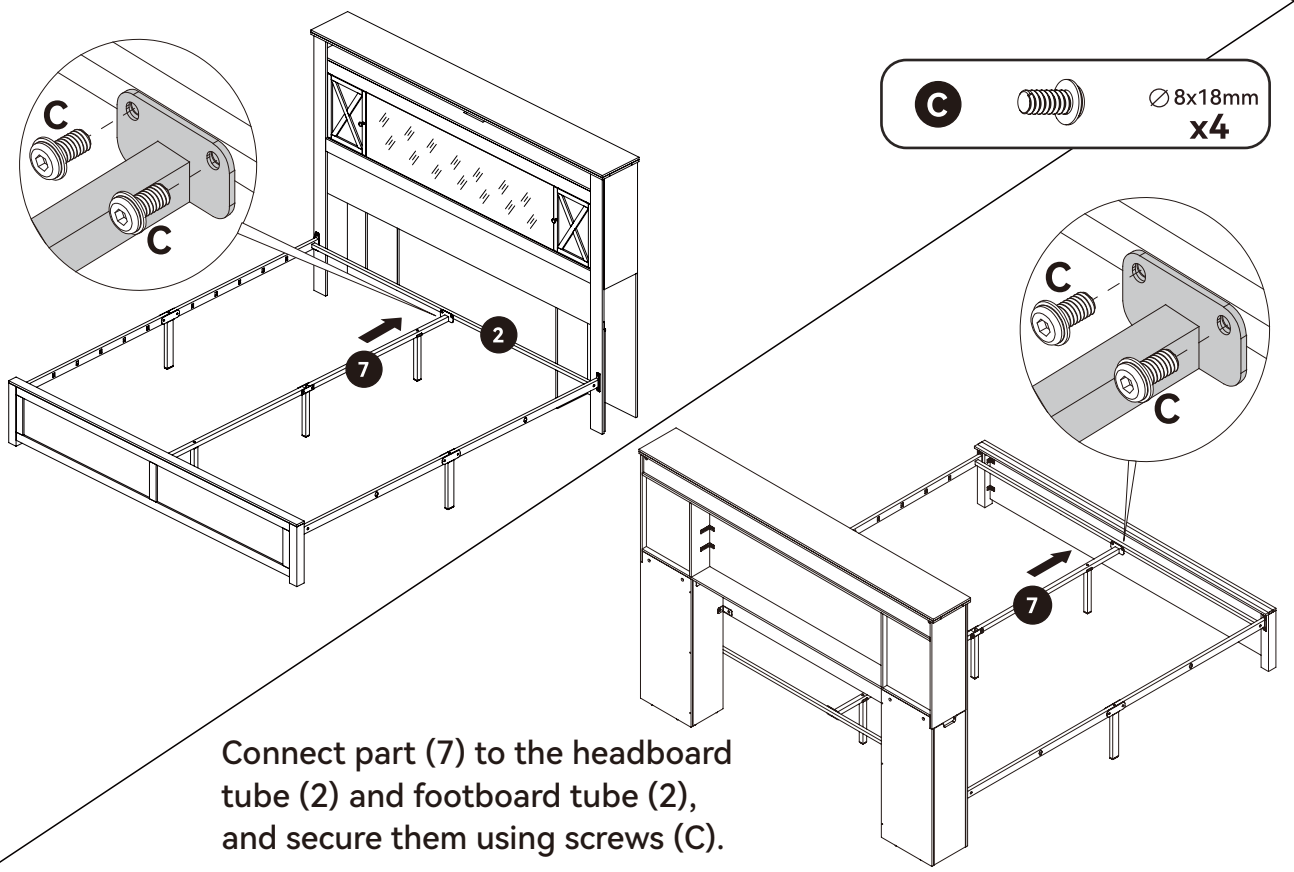

Connect part (7) to the headboard tube (2) and footboard tube (2), and secure them using screws (C).

Step 41 Frame Parts Section

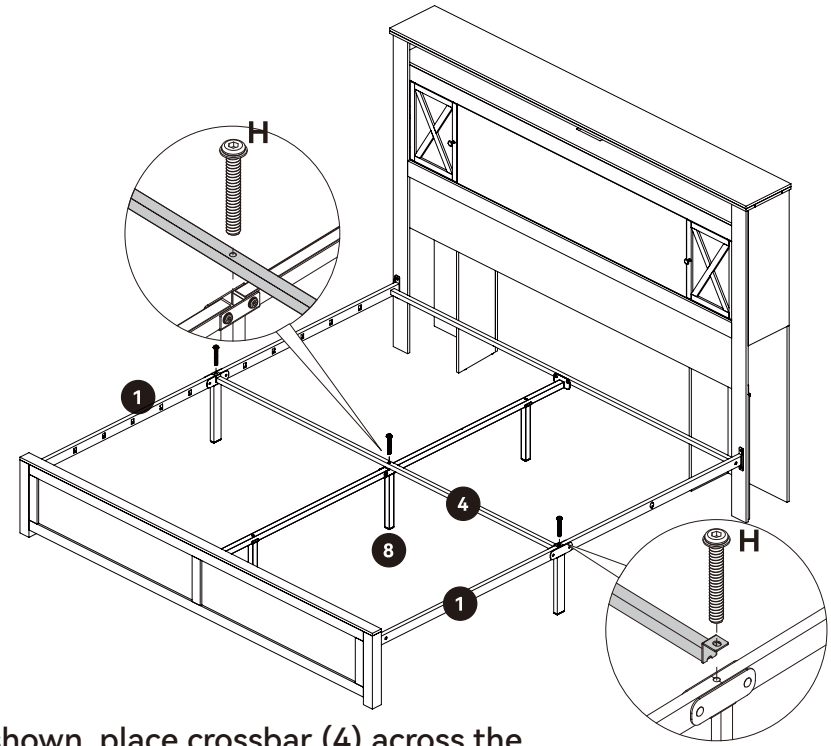

As shown, place crossbar (4) across the bed frame, connect it to parts (8) and (1), and secure it using screws (H).

H ∅8x55mm x3

Step 42 Frame Parts Section

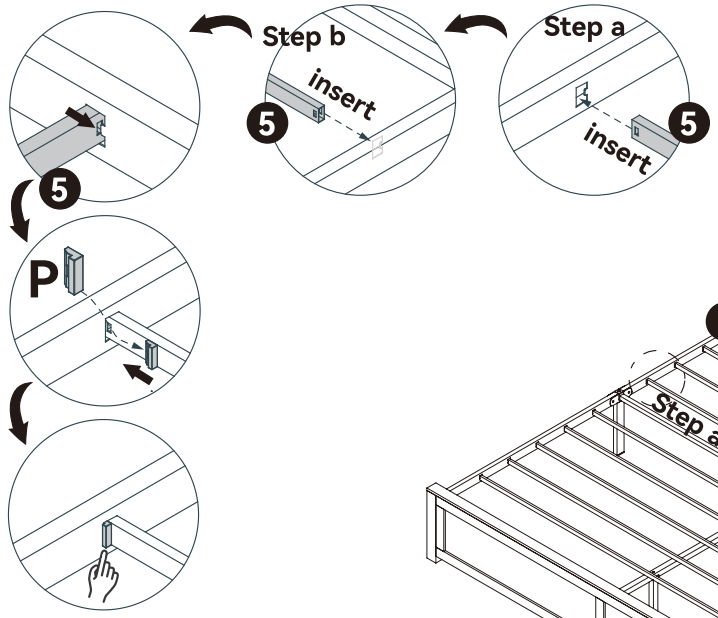

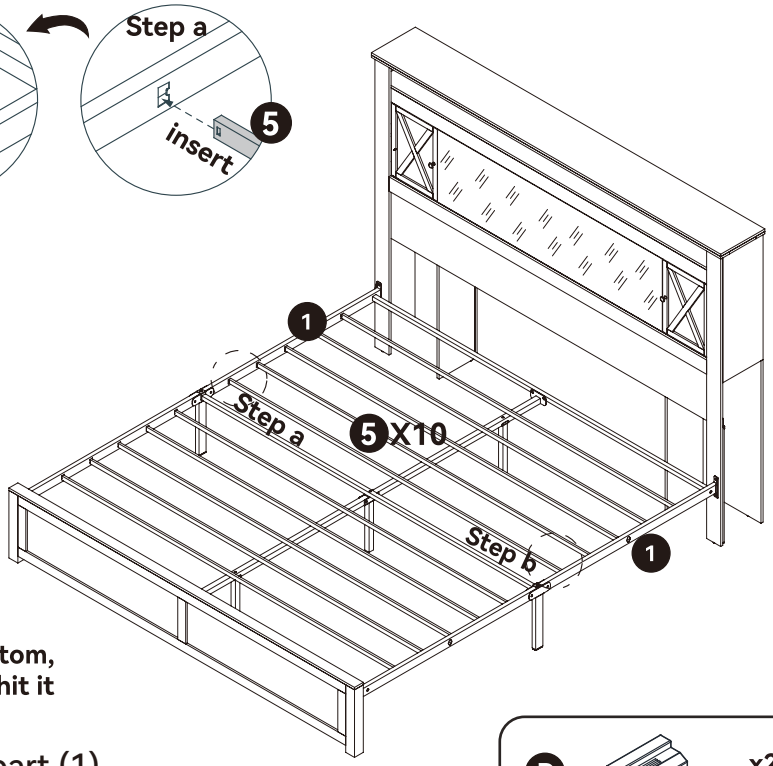

⚠ **Make sure to push to the bottom, you can use a hard object to hit it smoothly.**

As shown, attach slat (5) to part (1), and secure it with clips (P).

P  x20

Bedside Parts Section Installation

EN

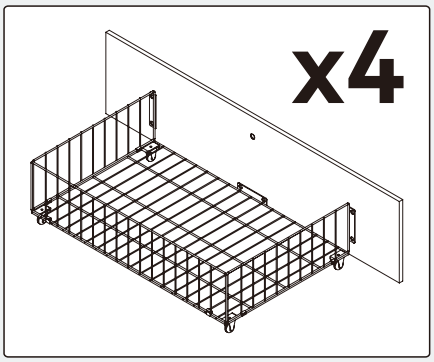

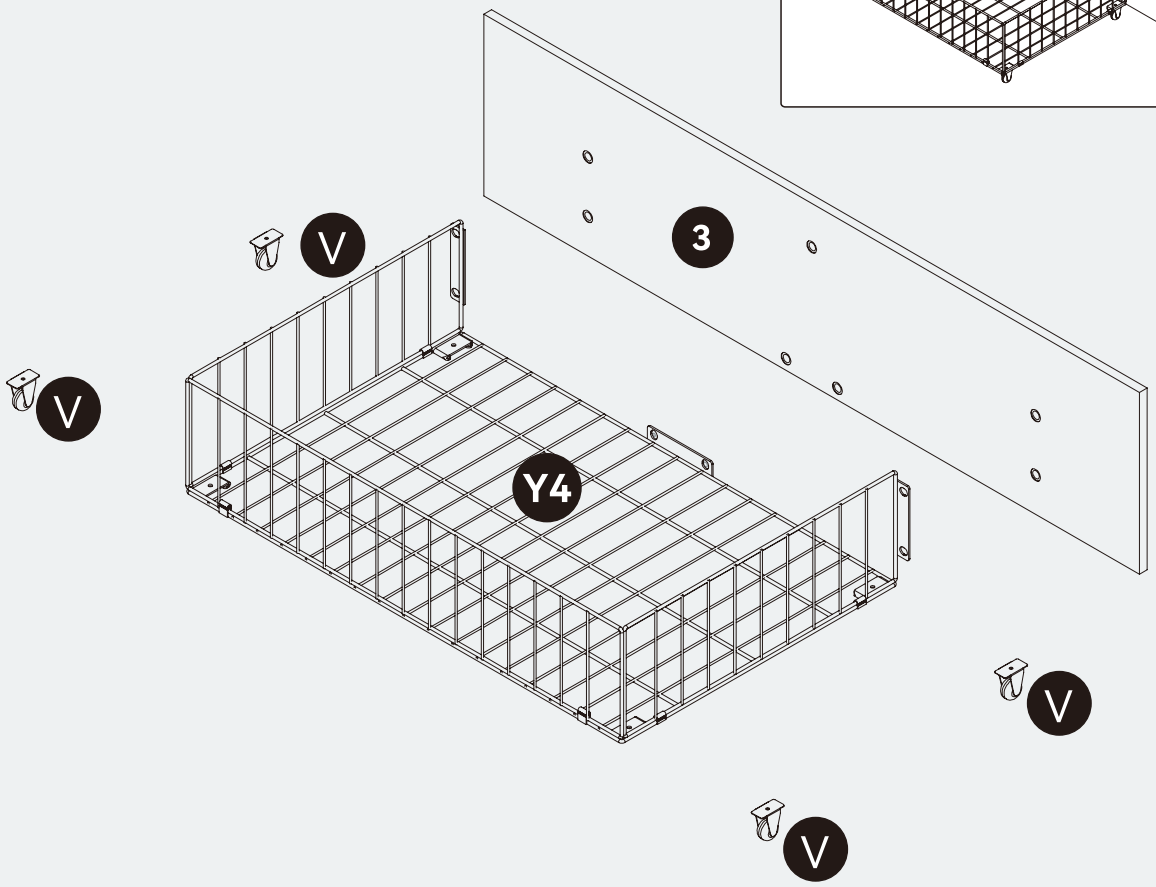

The bedside parts section assembly requires a total of labeled panels shown in the diagram. Please locate all of them and prepare them for use.

Hardware Accessory List

A		Ø8x12mm x24
B		Ø8x14mm Colored Zinc x4
M		Ø4x10mm x16
W		x8

Note:

Ensure all hardware components are accounted for before beginning assembly. Missing or damaged hardware should be reported to customer service for replacement.

Step 43 Bedside Parts Section

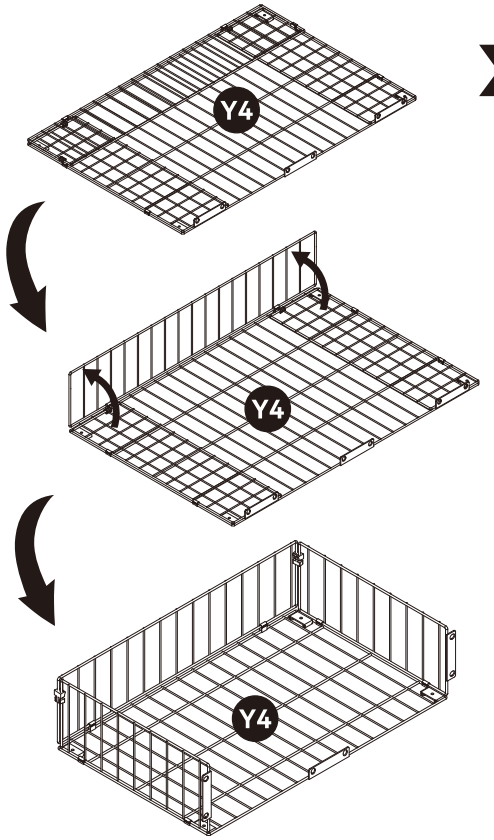

x4

Spread out part (Y4) and secure it using plastic fasteners (W).

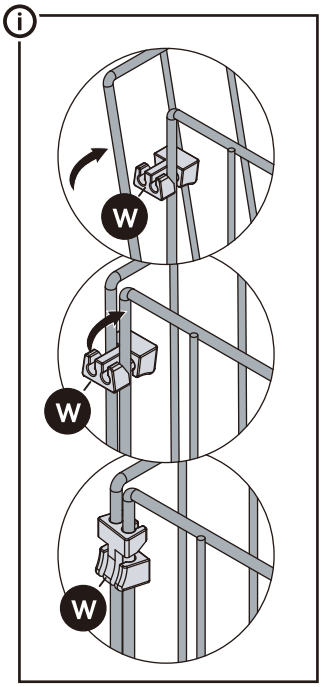

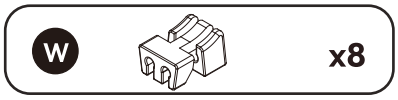

Step 44 Bedside Parts Section

As shown, connect part (Y4) to wheel (V), and secure it using screws (M).

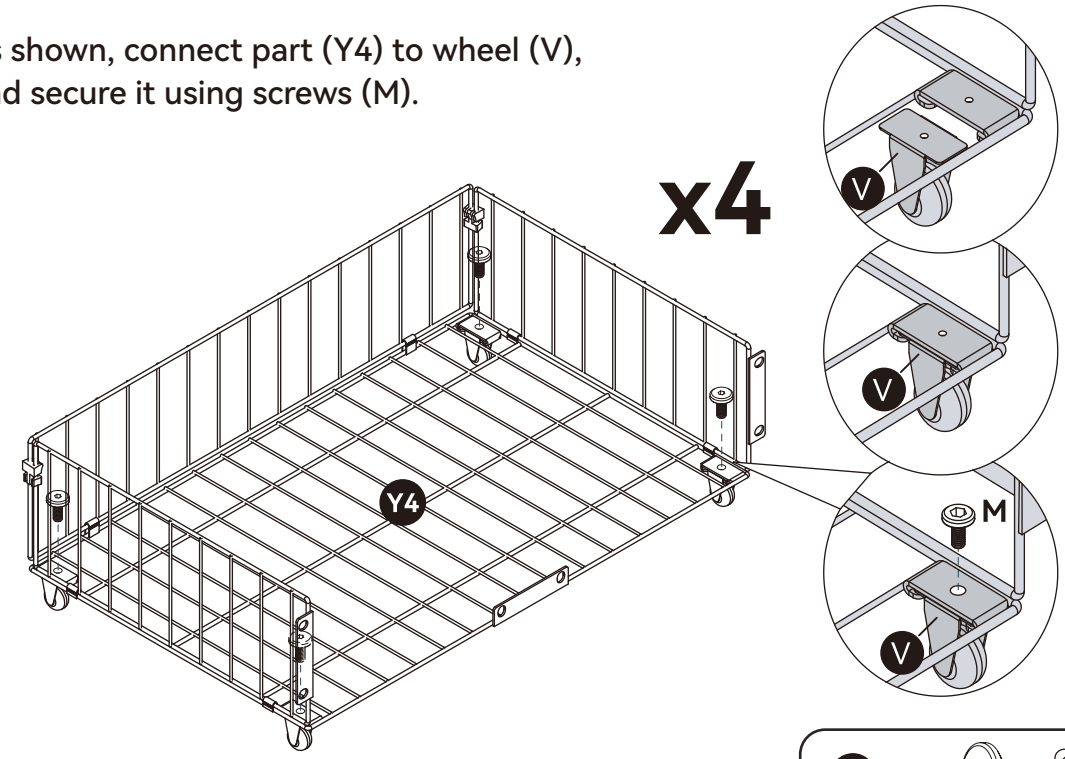

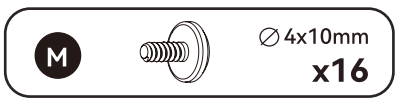

Step 45 Bedside Parts Section

x4

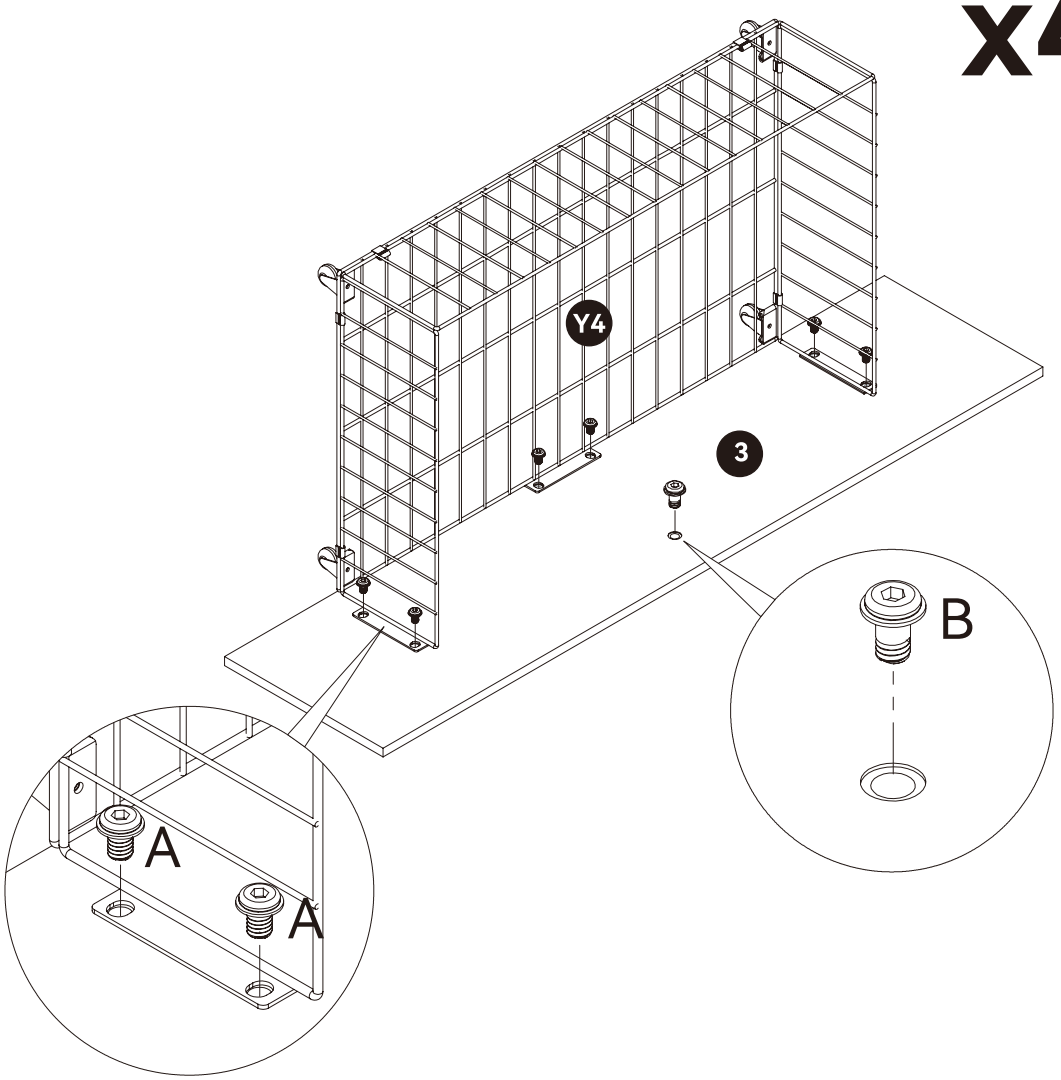

Attach the assembled metal drawer (Y4) to wooden panel (3) using screws (A). Install screws (B) onto the drawer panel so it can hook onto the bed frame later.

A		∅8x12mm	x24
B	 Colored Zinc	∅8x14mm	x4

DRAWER ADJUSTMENT STEPS

NOTE:
Gently lift the drawer, align the screw with the gourd-shaped hole, and then snap it in.

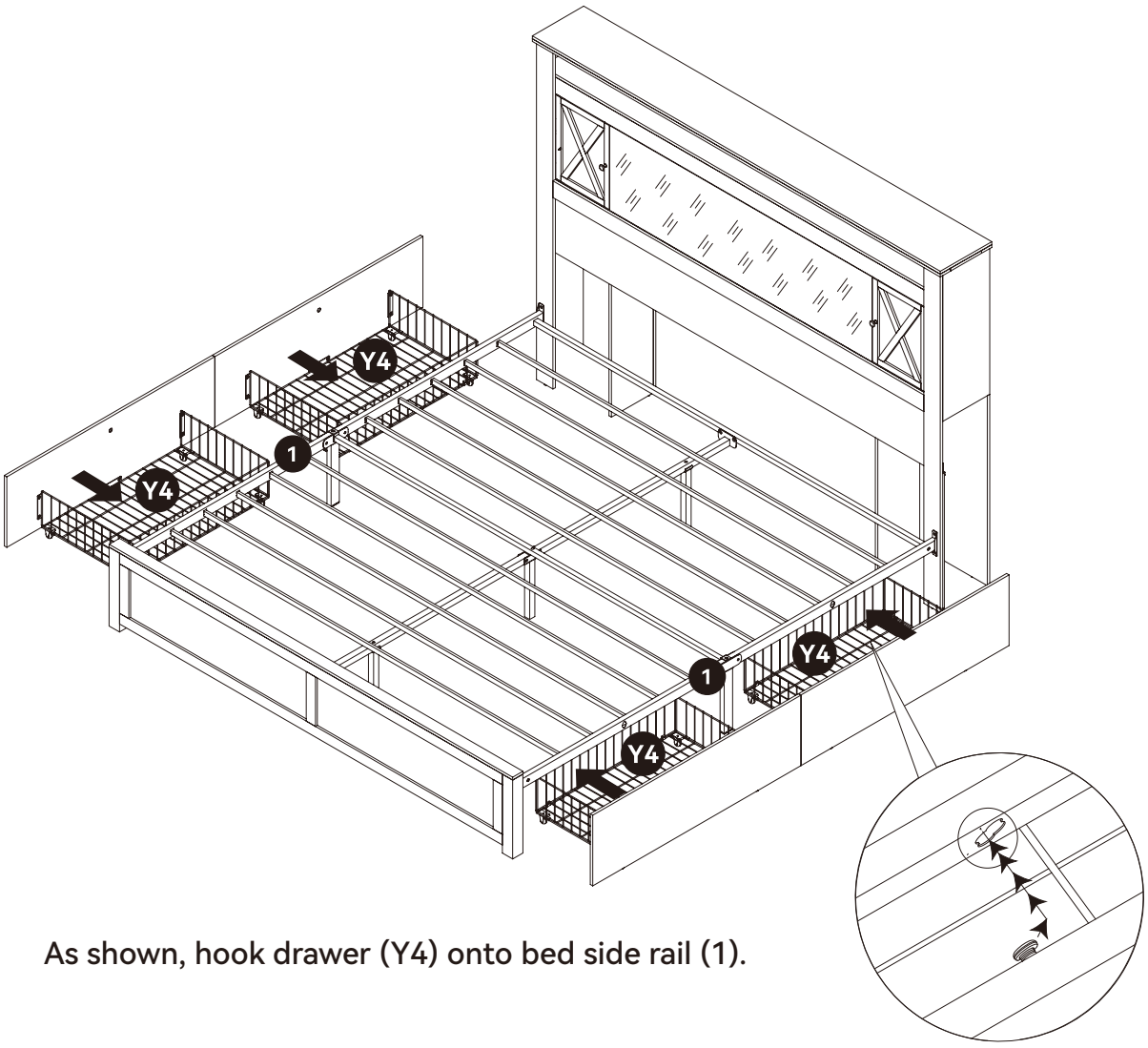

As shown, hook drawer (Y4) onto bed side rail (1).

Installing the Bed Drawer:

Carefully lift the drawer from the bottom with your hand to provide proper support. Align the hooks on the drawer with the notches on the bed frame. Once aligned, gently push the hooks into the notches on the bed side until they are securely locked in place. Ensure the drawer is stable and properly connected before releasing it.

Bedside Parts Section Installation

EN

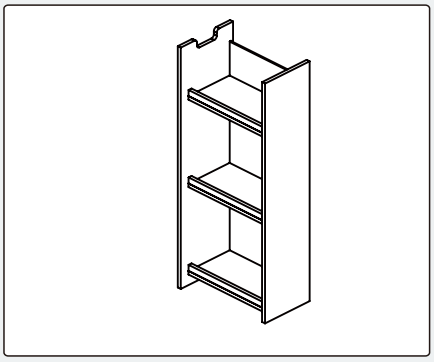

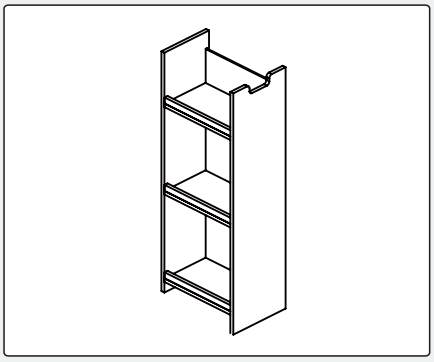

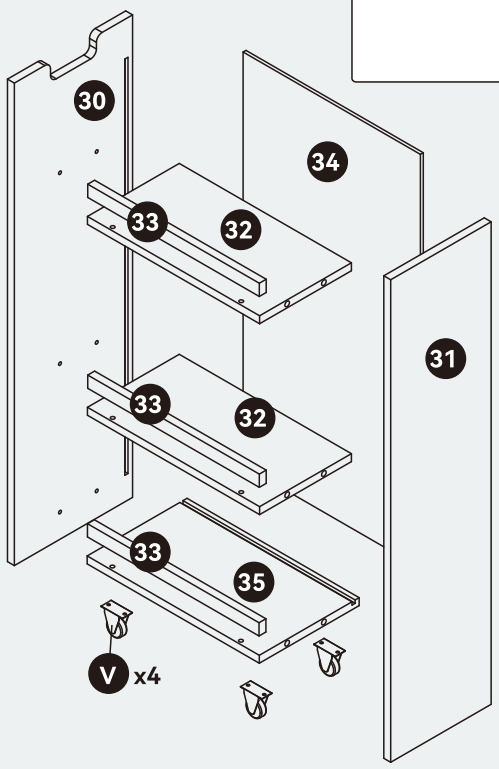

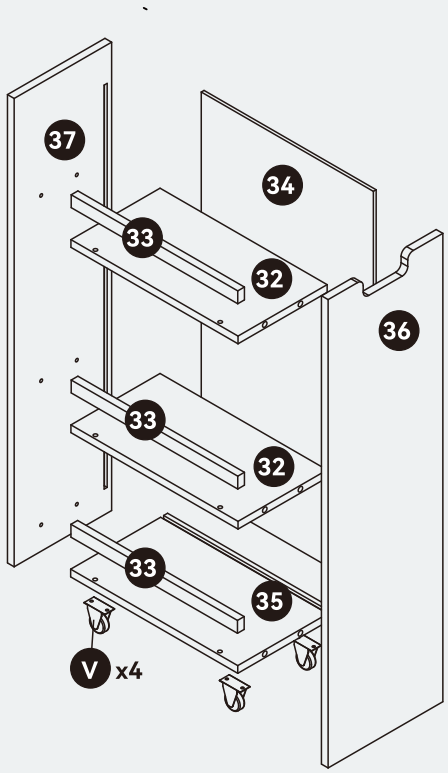

Hardware Accessory List

J		Ø5x25mm x12
O		Ø4.2x12mm x16
R		Ø3.5x12mm x10
S		Ø7x40mm x24
T		Ø15x9.5mm x24
Z		x10

The bedside parts section assembly requires a total of labeled panels shown in the diagram. Please locate all of them and prepare them for use.

Note:

Ensure all hardware components are accounted for before beginning assembly. Missing or damaged hardware should be reported to customer service for replacement.

Step 47 Bedside Parts Section

x4

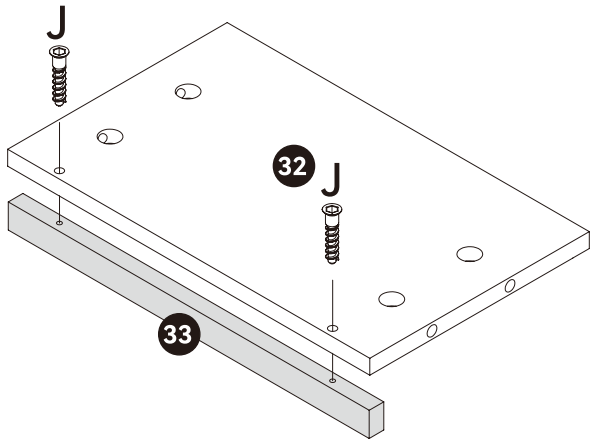

As shown, connect panel (33) to panel (32), and connect panel (33) to panel (35). Secure them using fasteners (J).

x2

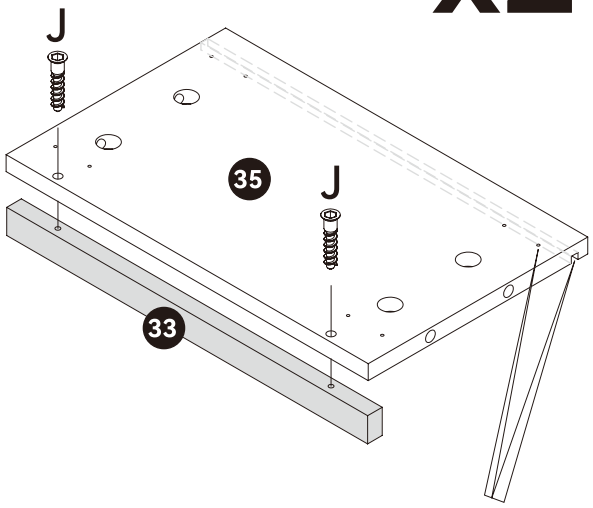

Component No. 35 has slots and small holes. Please pay attention to the distinction.

J		∅5x25mm X12

Step 48 Bedside Parts Section

x2

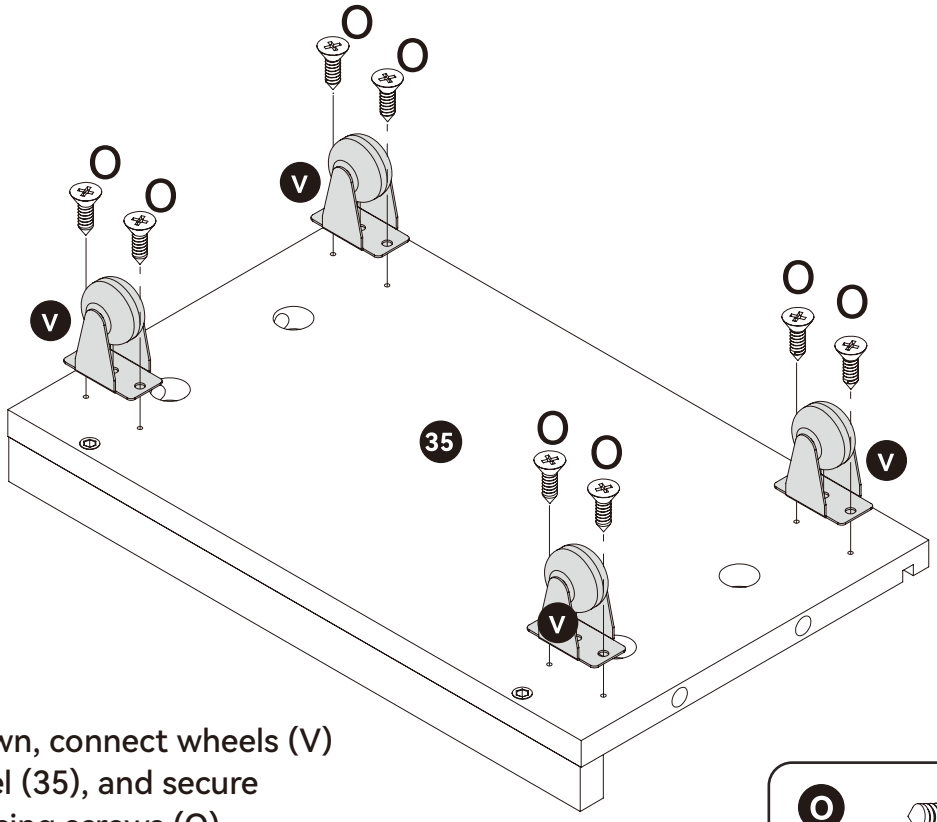

As shown, connect wheels (V) to panel (35), and secure them using screws (O).

O		∅4.2x12mm x16

Step 49 Bedside Parts Section

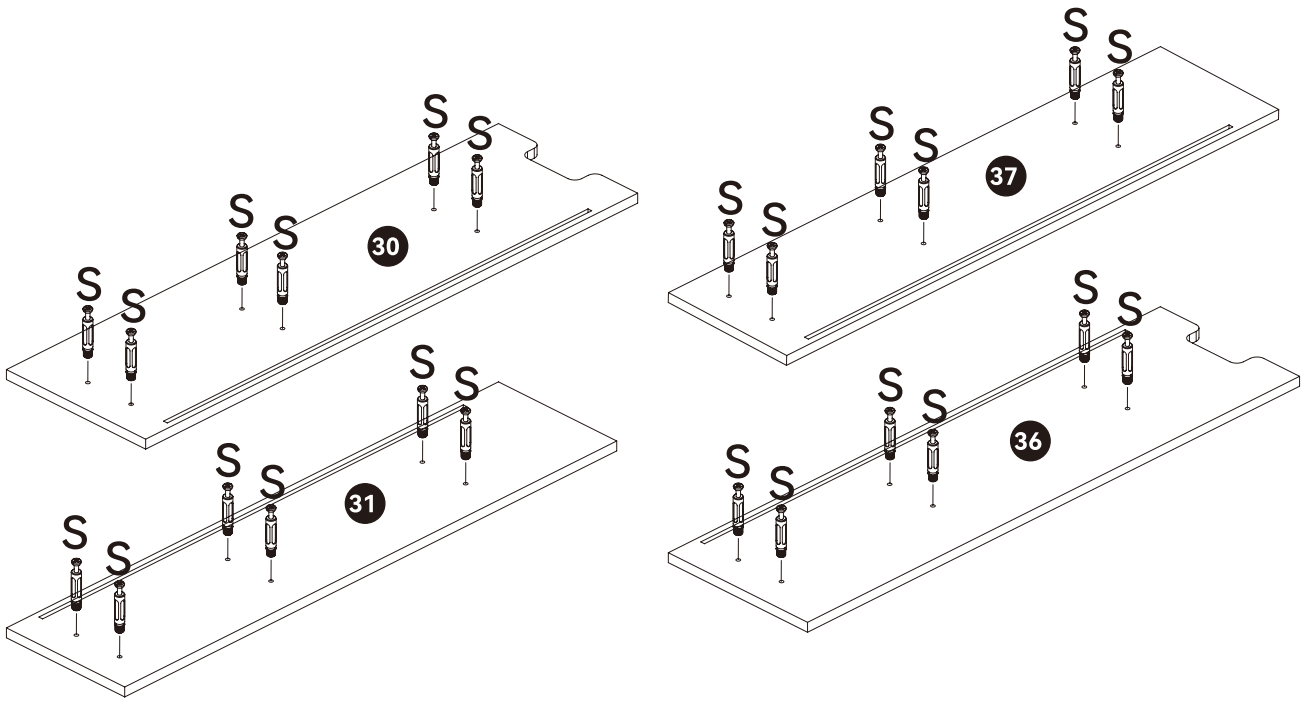

Install screw bolts (S) onto panels (30), (31), (37), and (36).

S ⌀7x40mm x24

Step 50 Bedside Parts Section

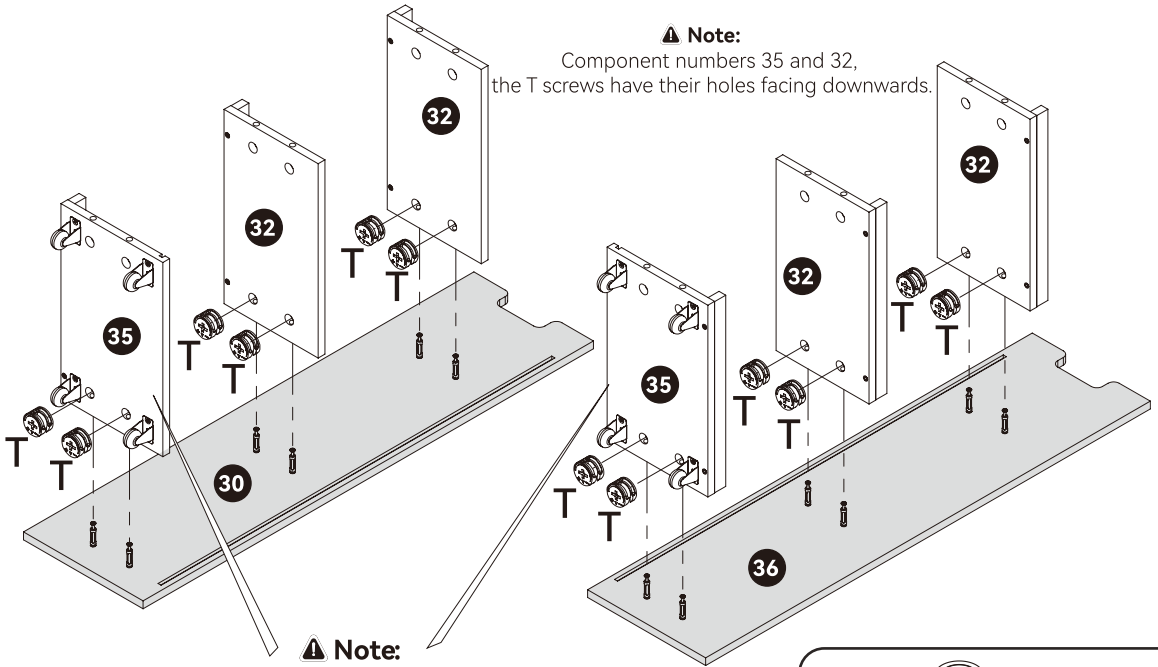

T ⌀15x9.5mm x12

Connect panels (35) and (32) to panel (30), and secure them using cam locks (T).
Connect panels (35) and (32) to panel (36), and secure them using cam locks (T).

Step 51 Bedside Parts Section

As shown, insert panel (34) into the grooves of panels (30) and (36).

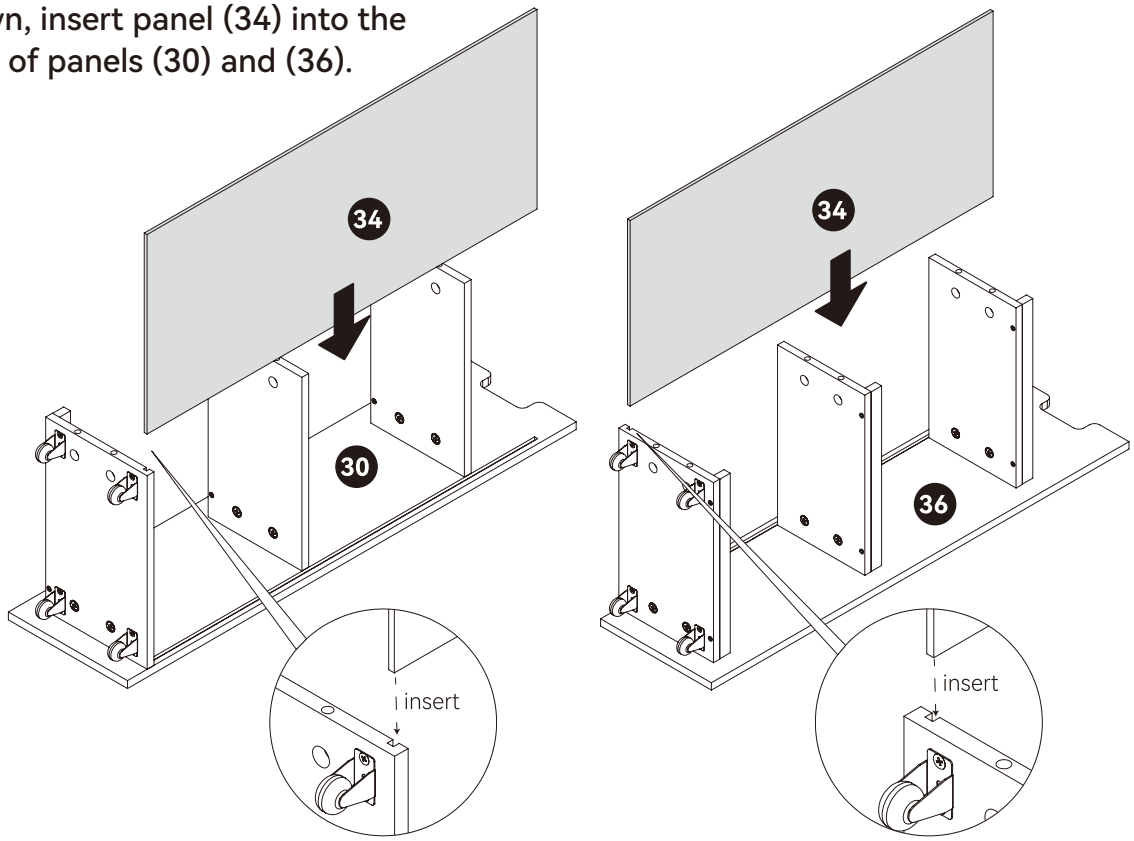

Step 52 Bedside Parts Section

⚠ **Note:**
Components numbered 31 and 37 have their slots facing downwards, and the slots of these components are on the same side as component numbered 34.

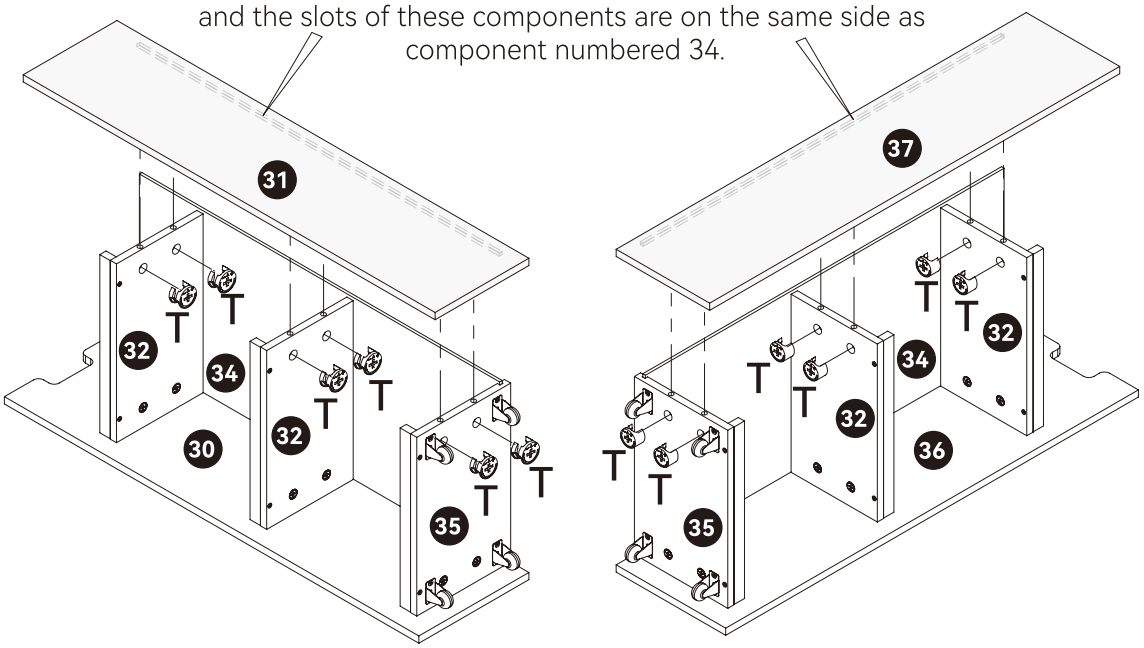

As shown, connect panel (31) to panels (35) and (32), and secure them using cam locks (T). Connect panel (37) to panels (35) and (32), and secure them using cam locks (T).

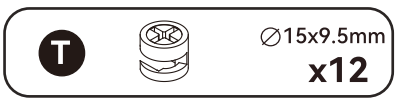

Step 53 Bedside Parts Section

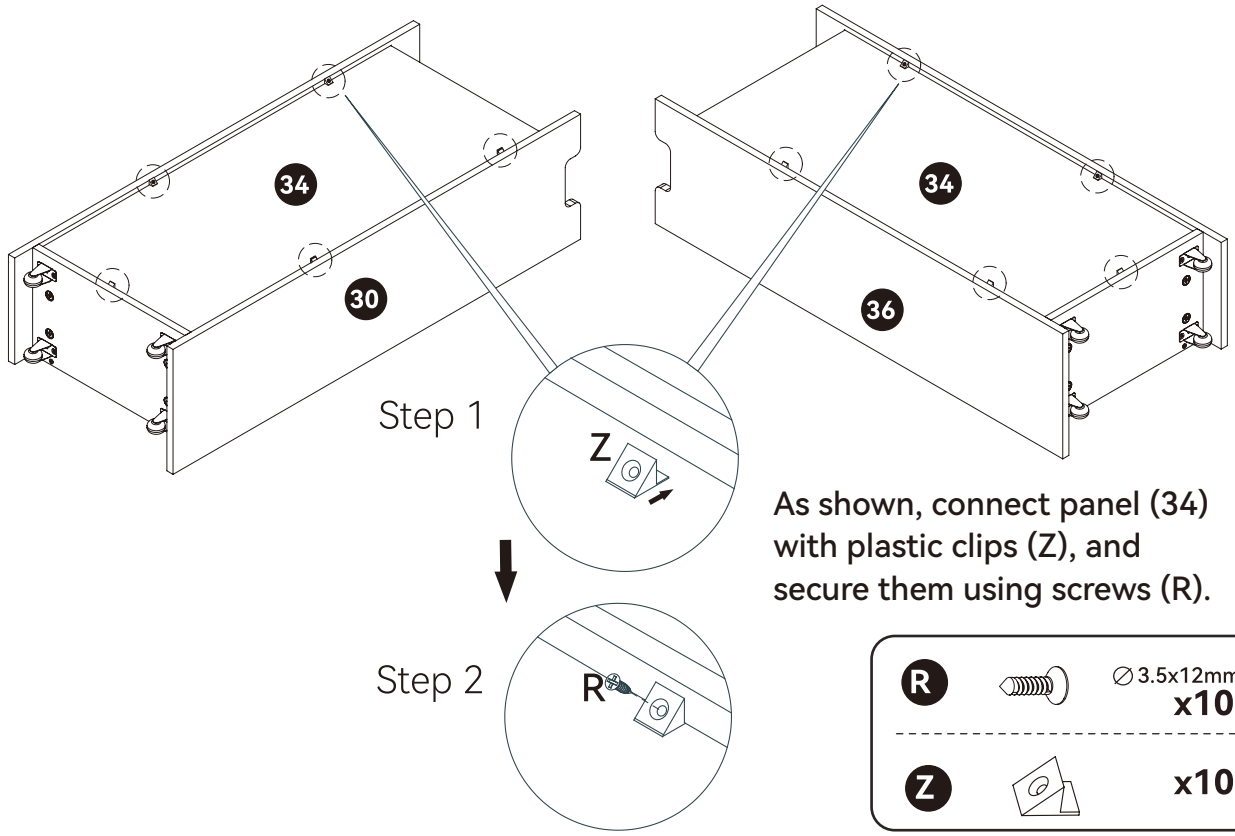

As shown, connect panel (34) with plastic clips (Z), and secure them using screws (R).

R		∅3.5x12mm x10
Z		x10

Step 54 Bedside Parts Section

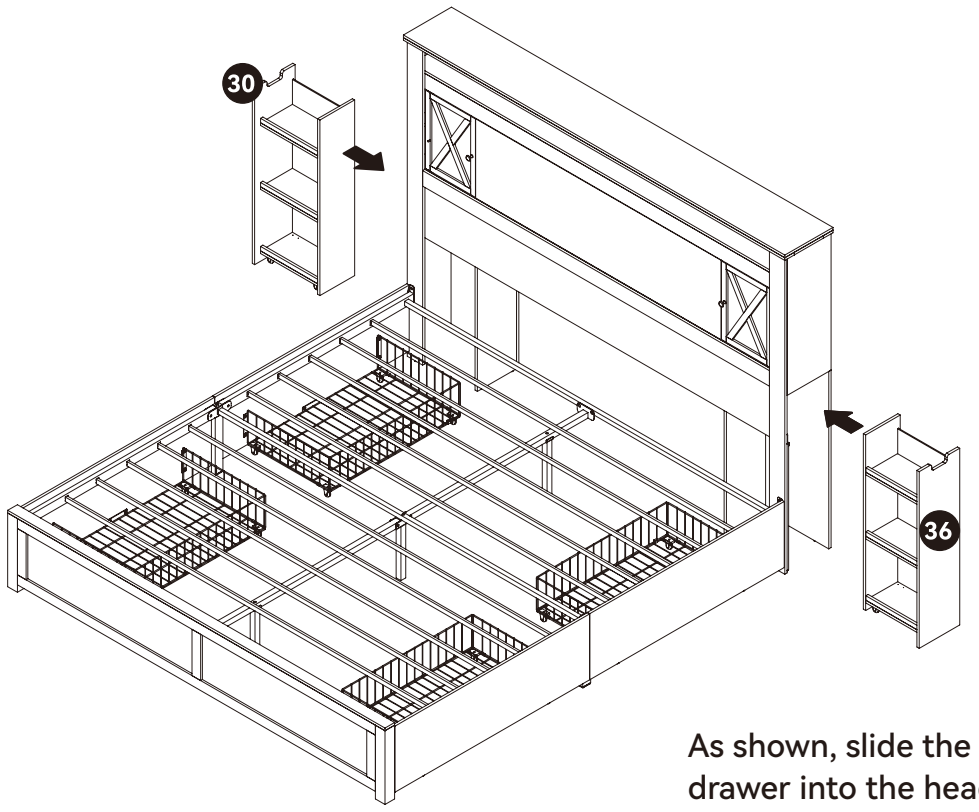

As shown, slide the side drawer into the headboard.

WIRING STEPS

NOTE:
Please ensure that both the circular connector and the USB connector are connected.

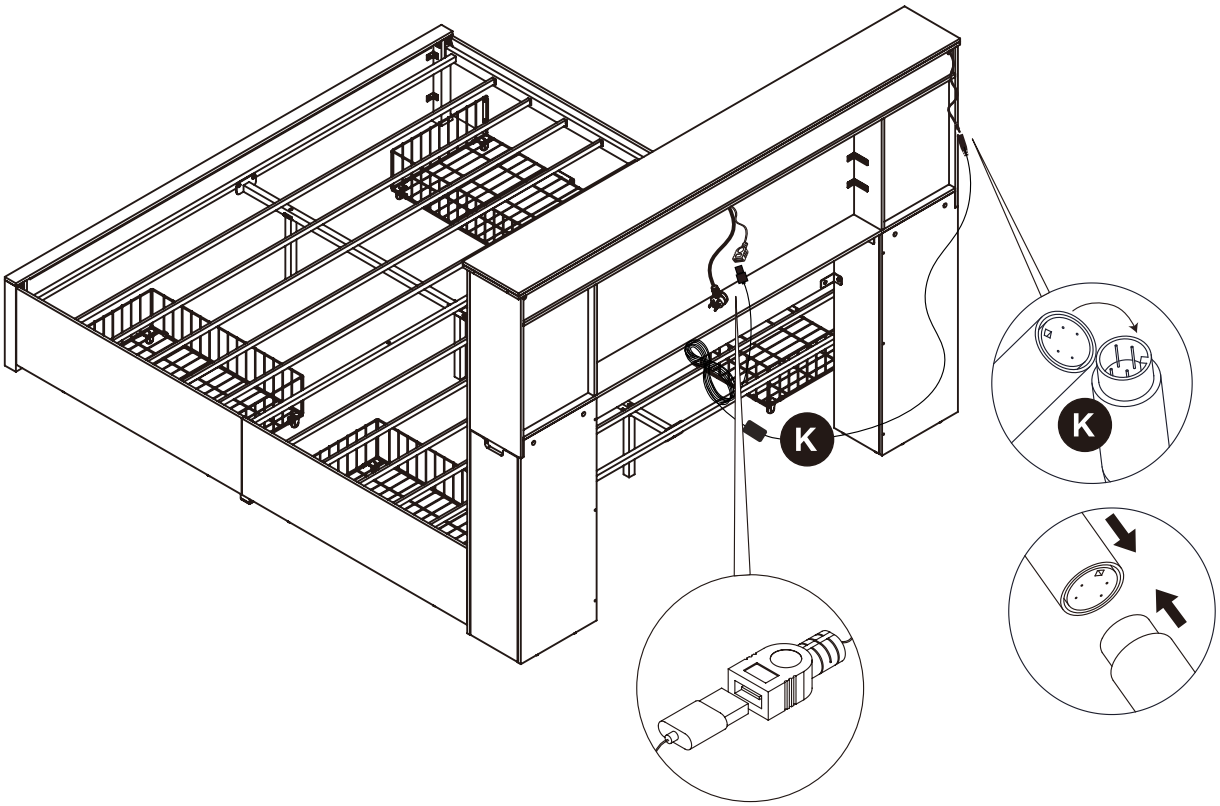



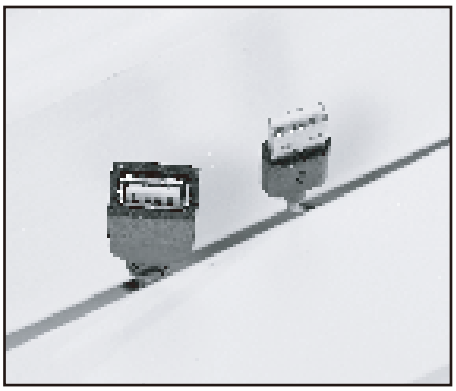

The LED strip wire connector:

As shown in the diagram, ensure that the connector pins and the pinholes are properly aligned before connecting