Assembly Instructions

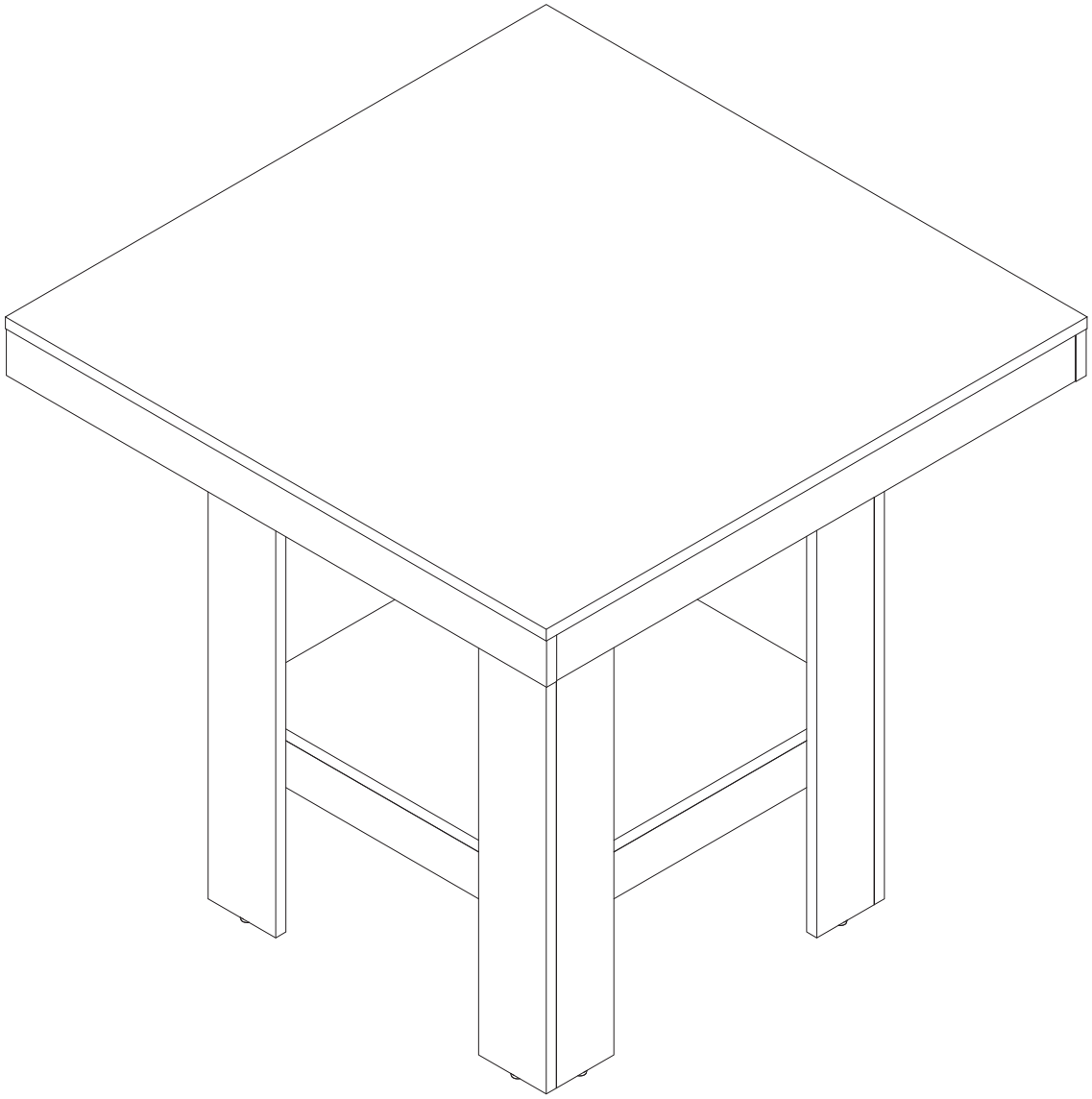

Dining Table

Model No.
HOGA-RY0300

Contact Us

We're here to help you.

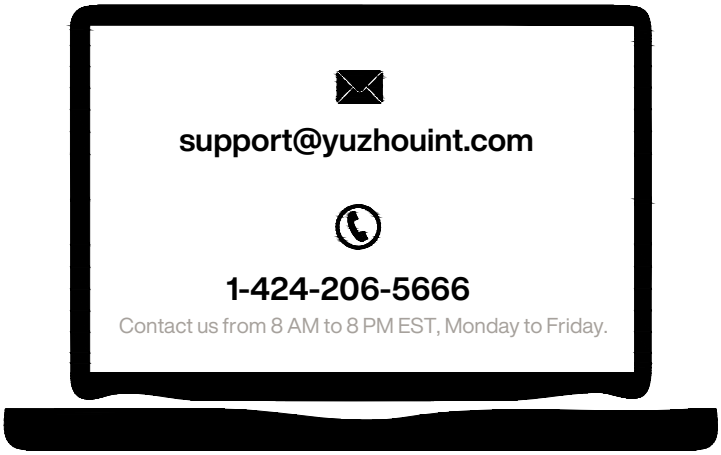

Your satisfaction is our top priority. If you encounter any issues with this product, such as missing or damaged parts, we're here to help. Please retain the original packaging and take photos of the packaging and the product, then contact us as soon as possible.

Warm Tips

1. Carefully read these instructions and keep them for future reference.
2. Check the parts list and confirm everything's there before starting assembly.
3. When assembling, put all parts on a soft, smooth surface like a carpet to avoid scratches.
4. Don't fully tighten screws until all parts are confirmed in place to avoid misalignment.

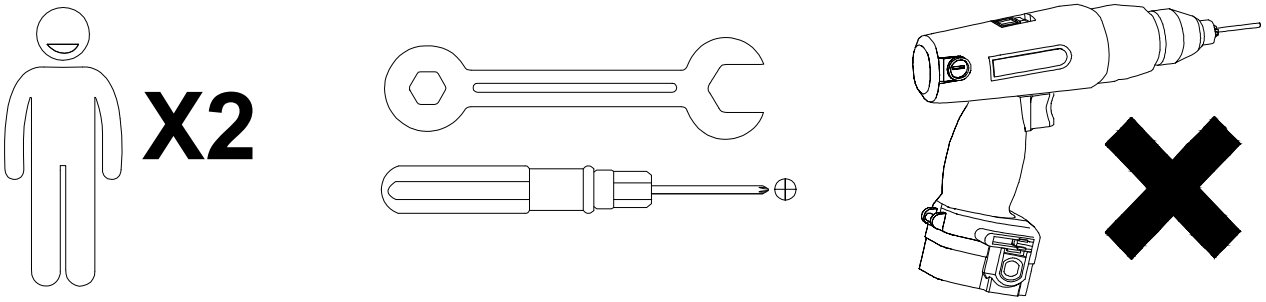

We recommend using hand tools for assembly.

If an electric screwdriver is used, reduce power and torque to avoid damage to the product.

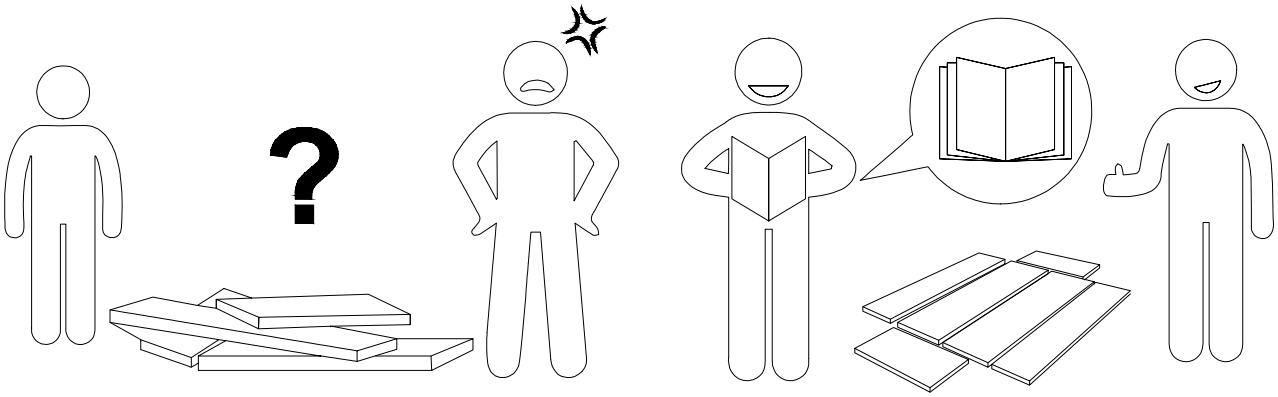

AVOID SCRATCHES

In order to avoid scratching, this furniture should be assembled on a soft surface, such as a rug.

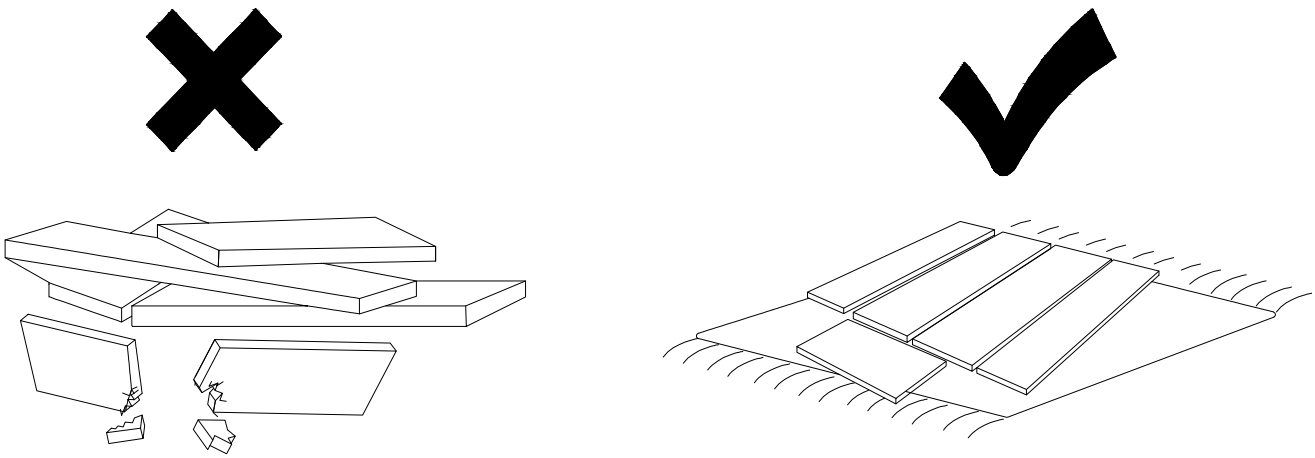

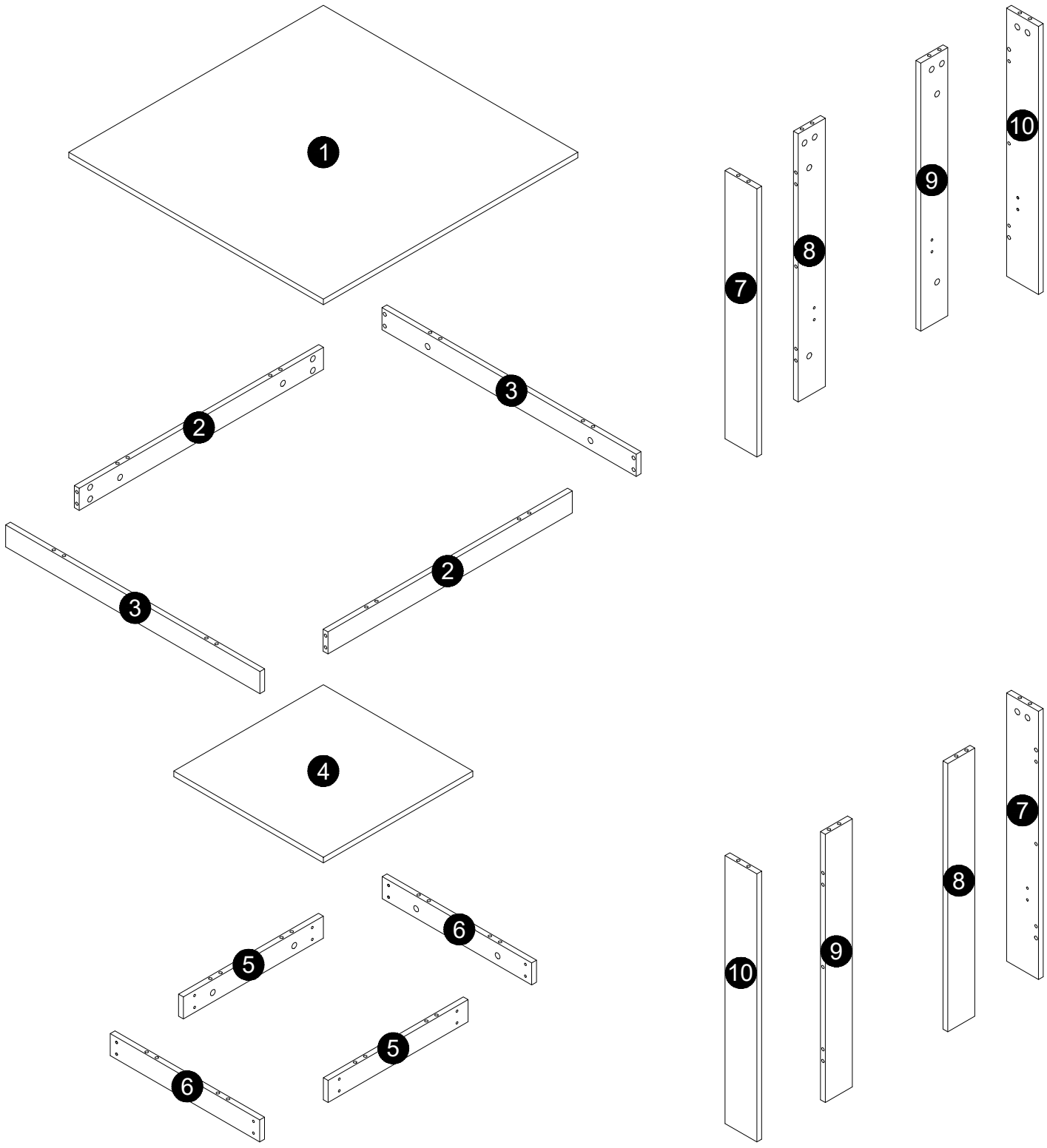

⚠ Caution

Make sure all parts are included. Most board parts are labeled or stamped on the raw edge.
Contact us for a free replacement if you encounter any damaged or missing parts.

Parts List

❶ 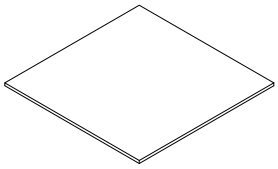 1 pc	❷ 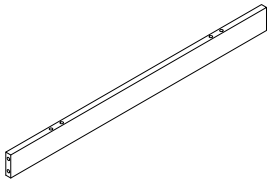 2 pcs	❸ 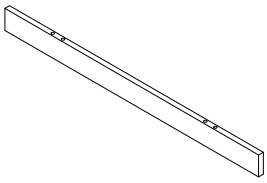 2 pcs	❹ 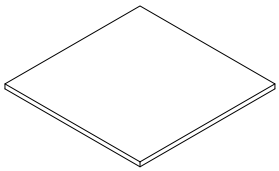 1 pc	❺ 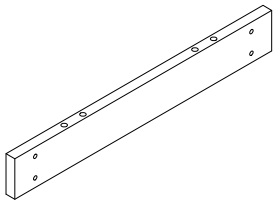 2 pcs
❻ 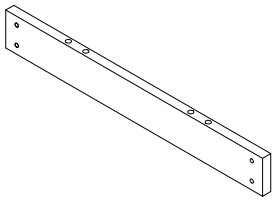 2 pcs	❼  2 pcs	❽ 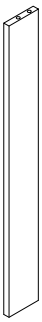 2 pcs	❾  2 pcs	❿  2 pcs

Hardware List

A	B	C	D	E	F
 Ø6x45mm	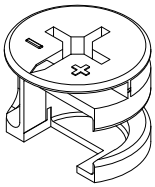 Ø15x12mm	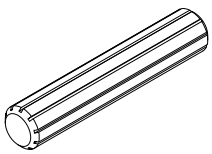 Ø8x40mm	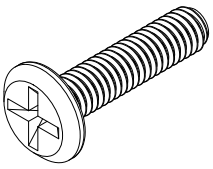 M6x25mm	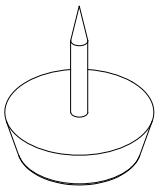 Ø12x5mm	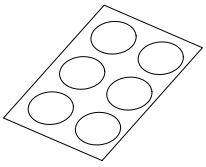 Ø21MM
48 pcs	48 pcs	28 pcs	16 pcs	8 pcs	8 pcs

G					
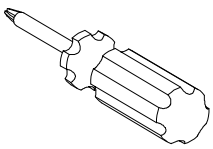 80mm					
1 pc					

Installation of Cams and Pins

Step 1-2: Align the plastic part with the mounting hole and press it in. If you can't press it in, loosen the screw counter clockwise or completely remove the screw from the plastic part and try again.
Step 3-4: After pressing the plastic part into place, use a screwdriver to tighten the screw clockwise.

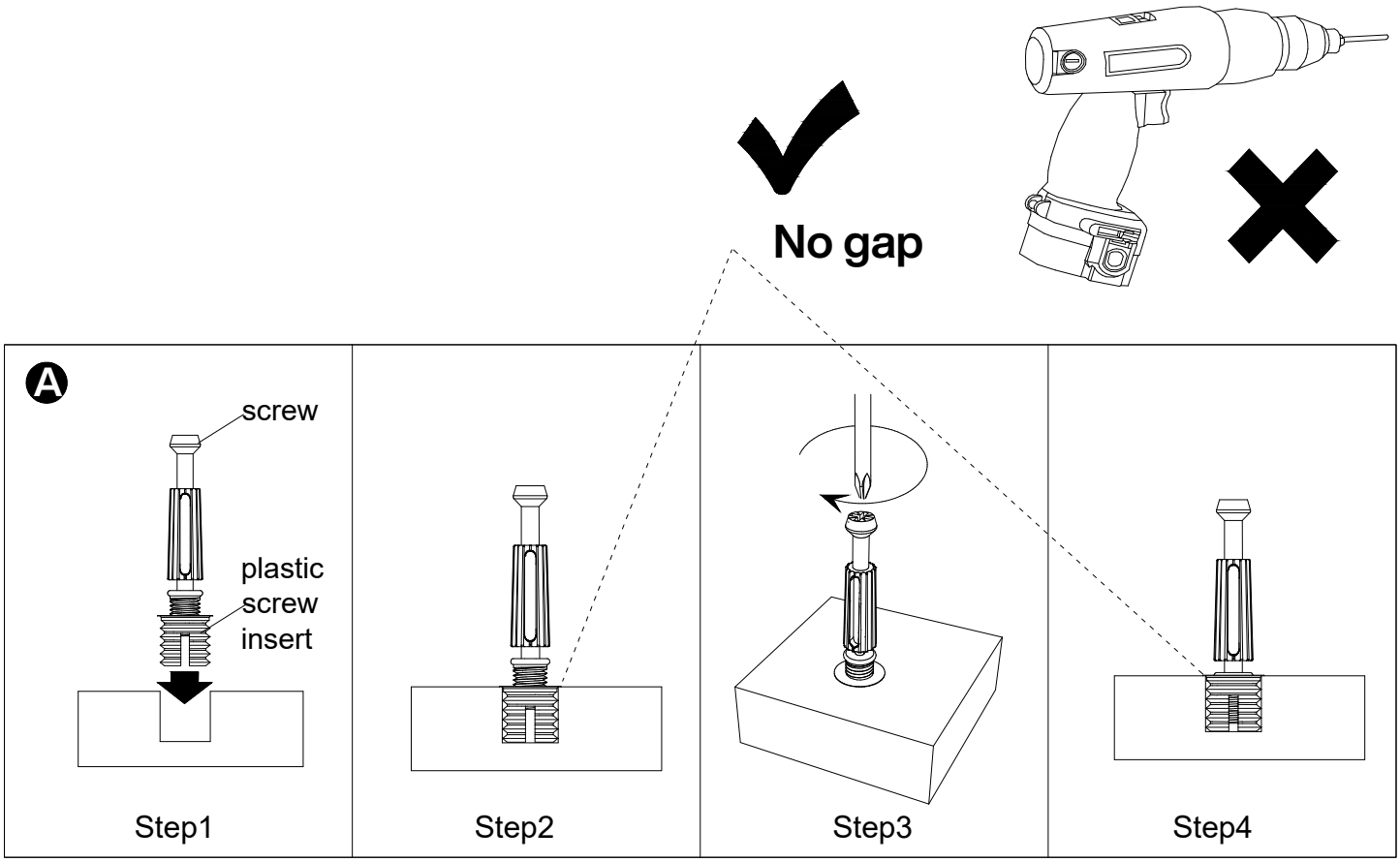

Screw the pin into the hole. Set the cams correctly by aligning the head of the cams with the lock pins. Lock the cam by turning the cam head with a screwdriver until it is tightened. Please do not use an electric screwdriver to assemble the unit.

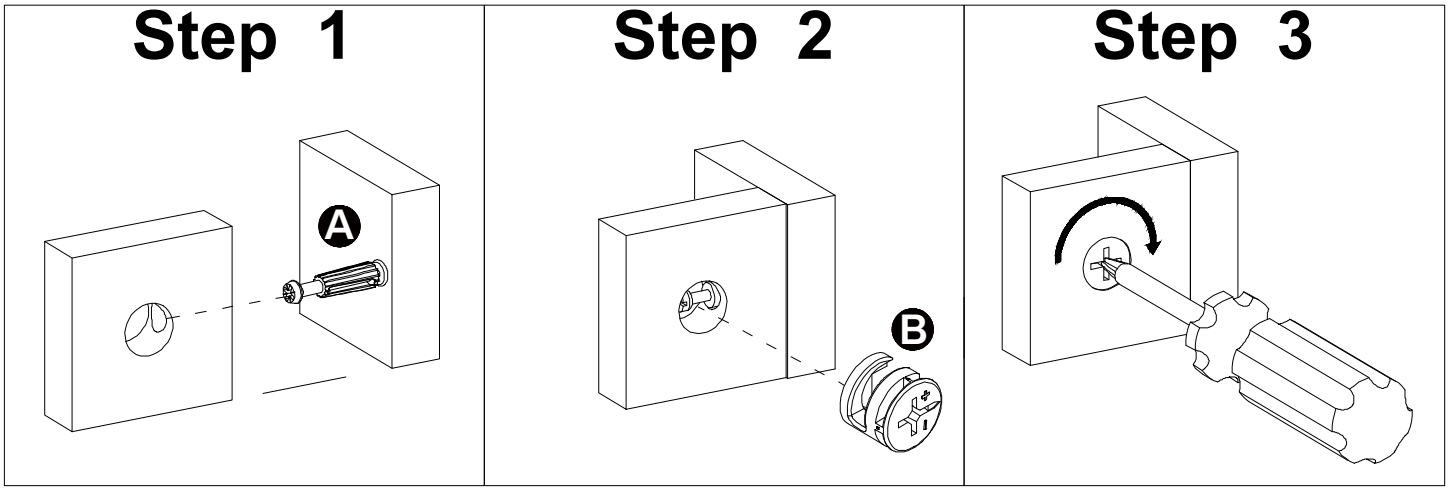

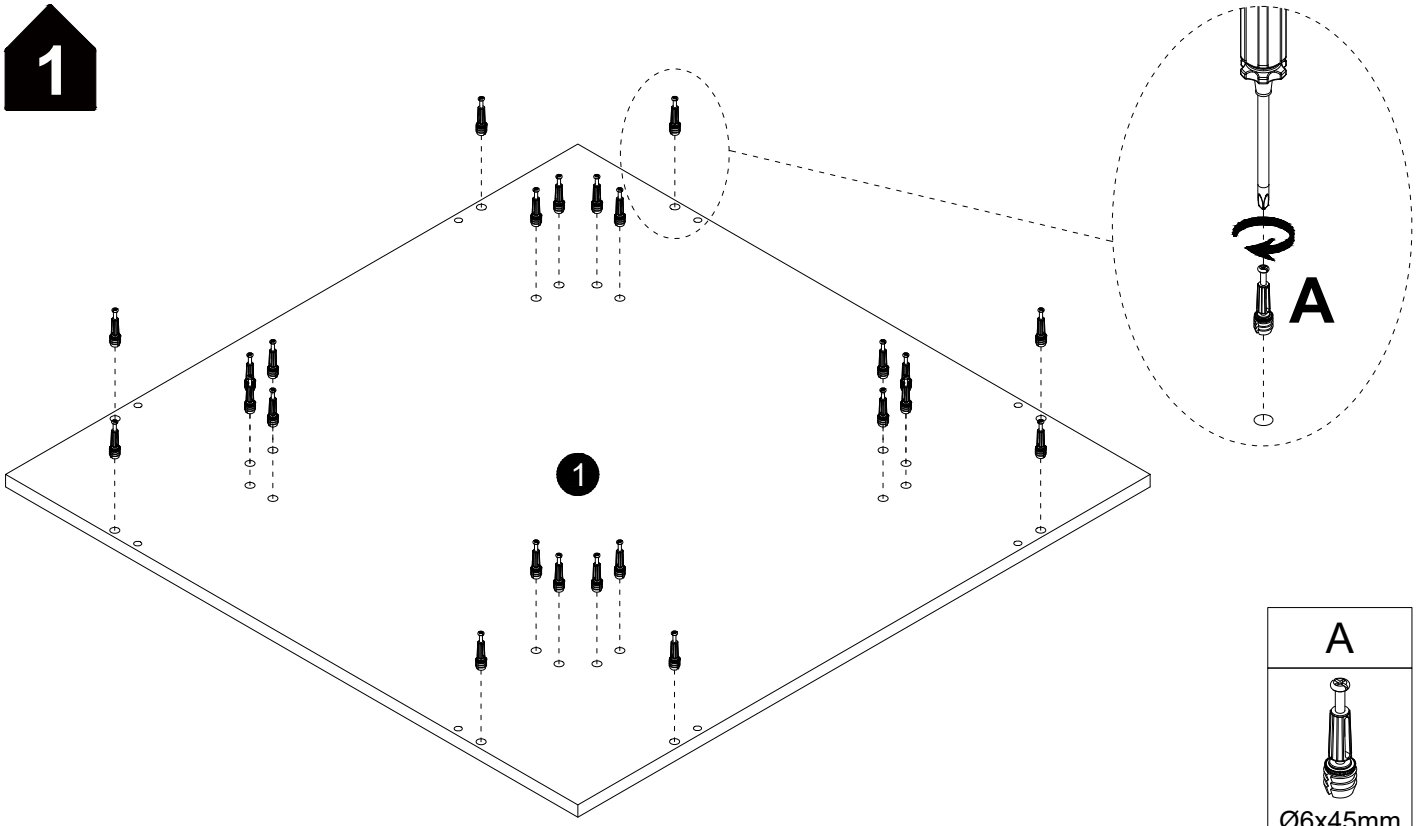
1
1
A
A
Ø6x45mm
24 pcs

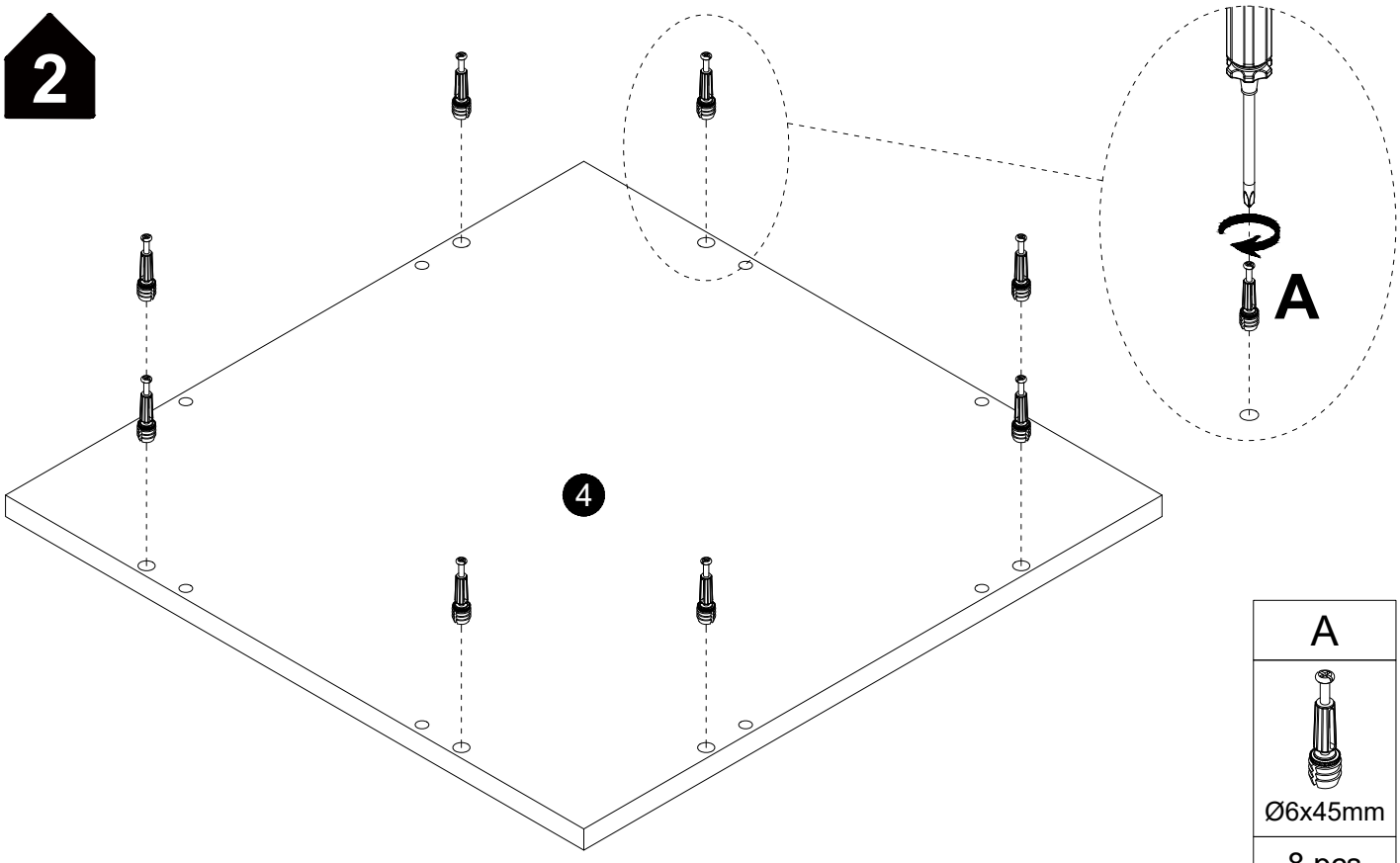
2
4
A
A
Ø6x45mm
8 pcs

3

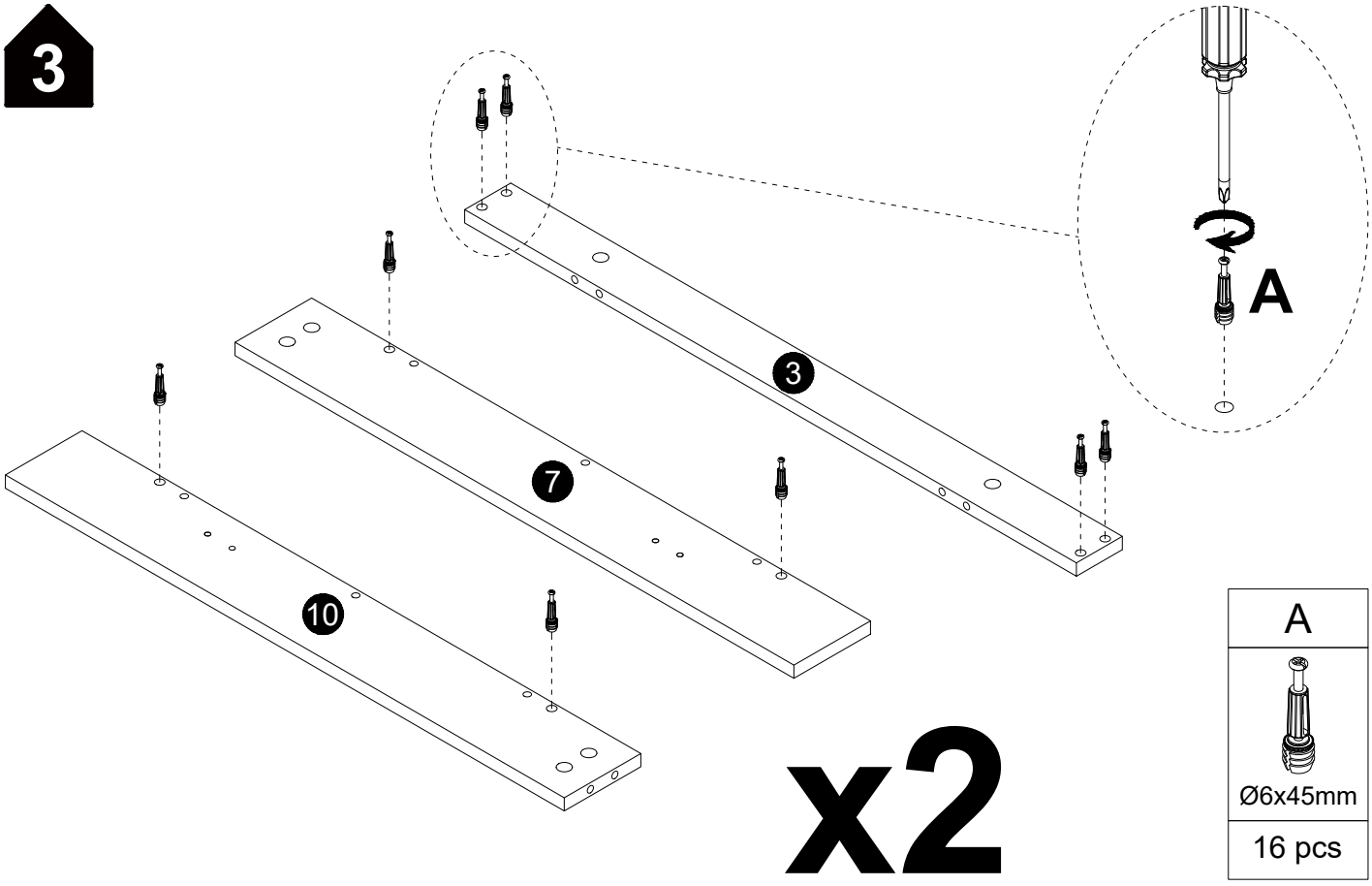

A
Ø6x45mm
16 pcs

4

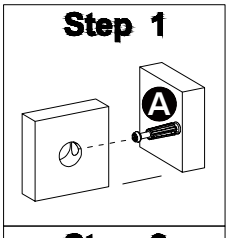

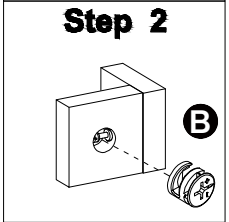

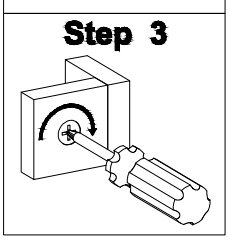

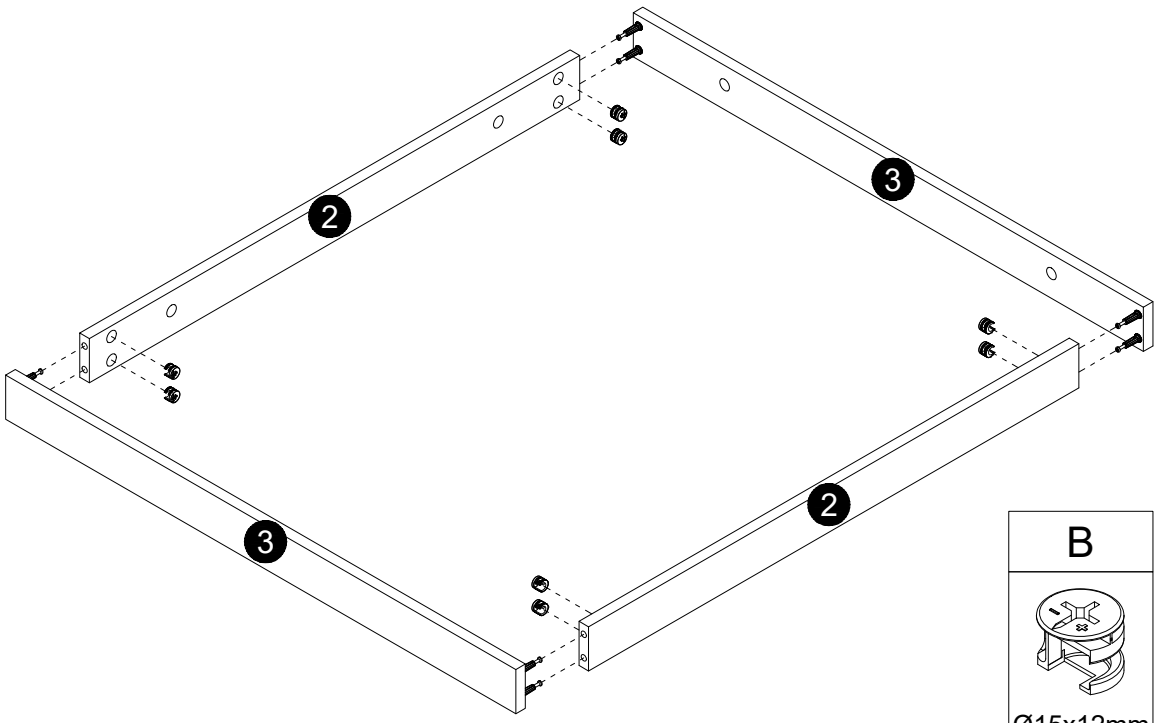

B
Ø15x12mm
8 pcs

5

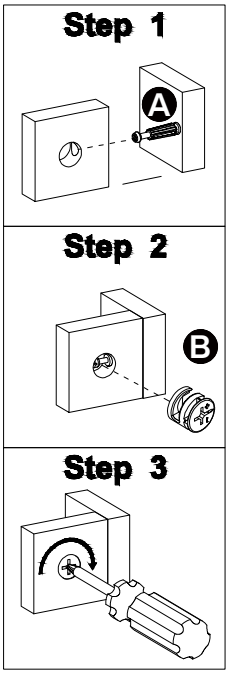

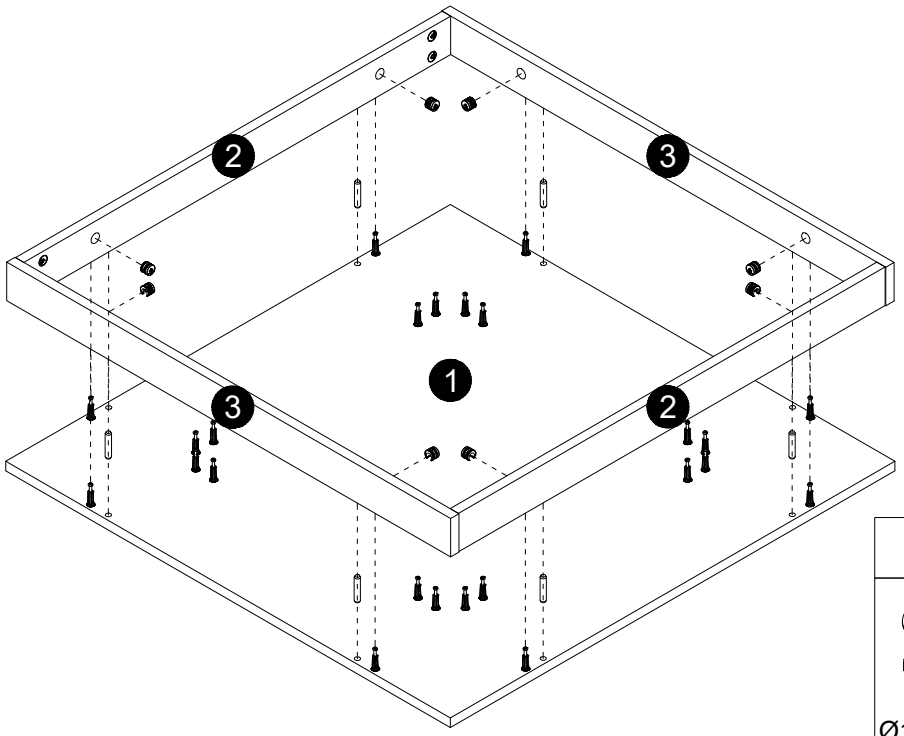

B	C
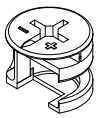	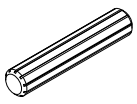
Ø15x12mm	Ø8x40mm
8 pcs	8 pcs

6

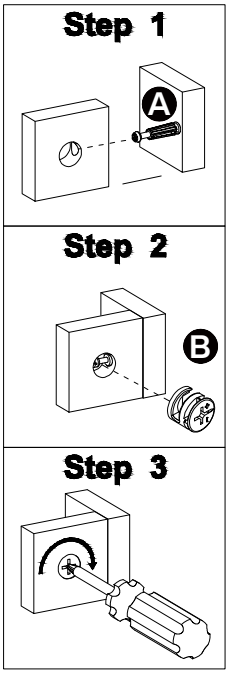

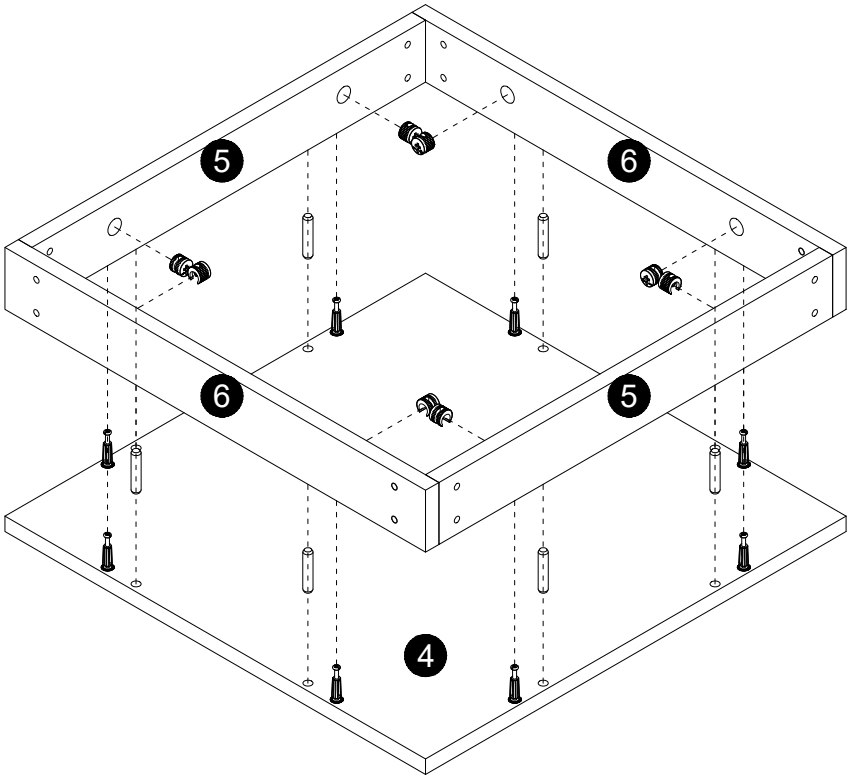

B	C
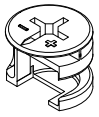	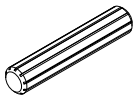
Ø15x12mm	Ø8x40mm
8 pcs	8 pcs

7

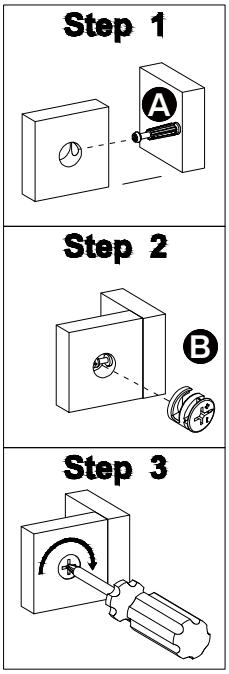

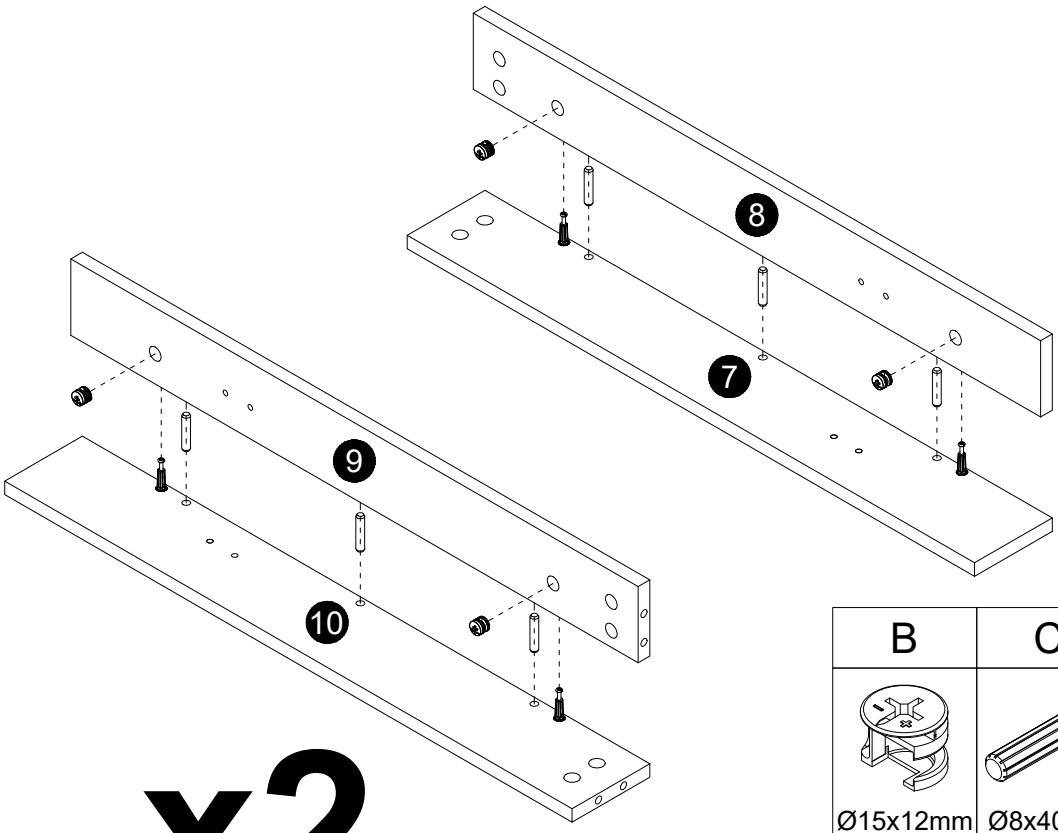

x2

B	C
Ø15x12mm	Ø8x40mm
8 pcs	12 pcs

8

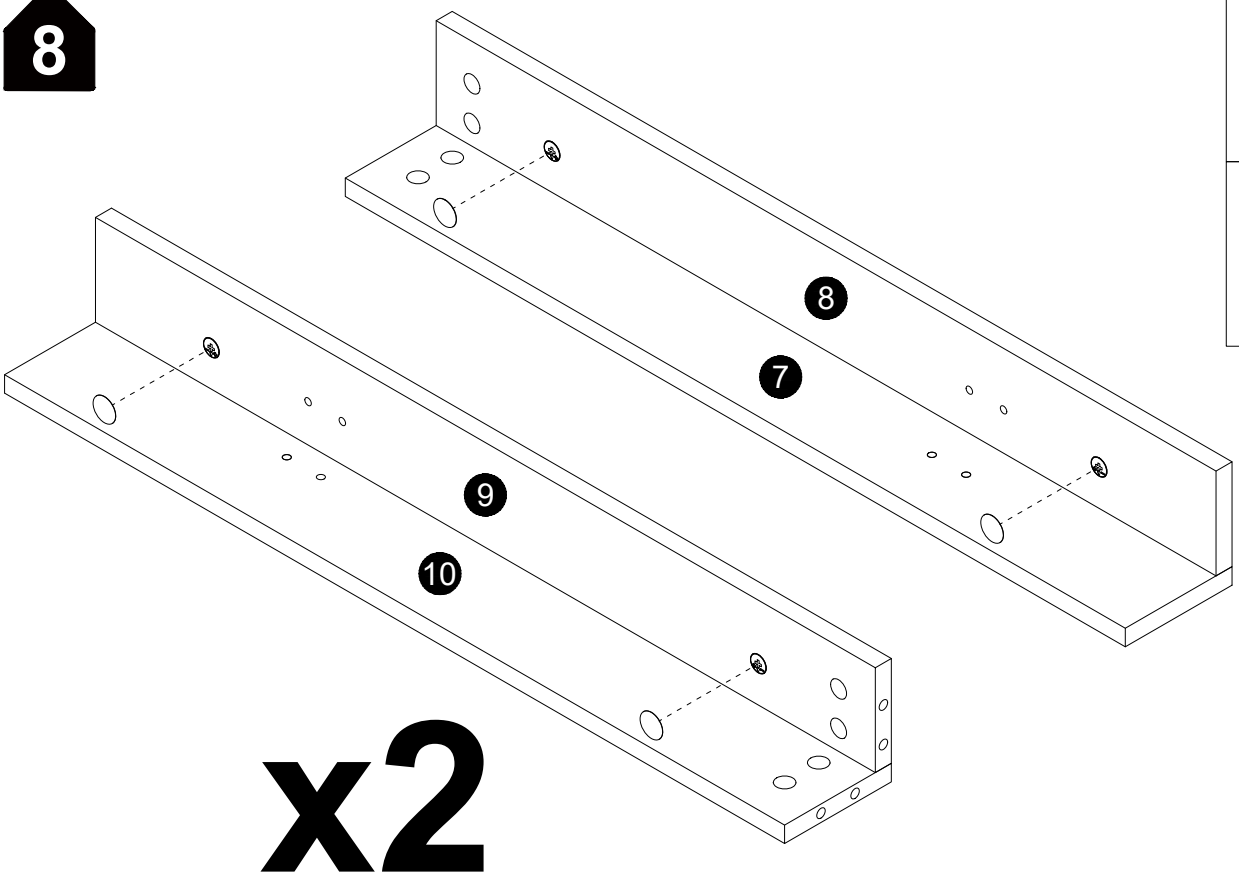

x2

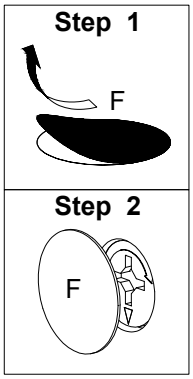

F
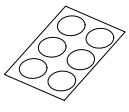
Ø21MM
8 pcs

9

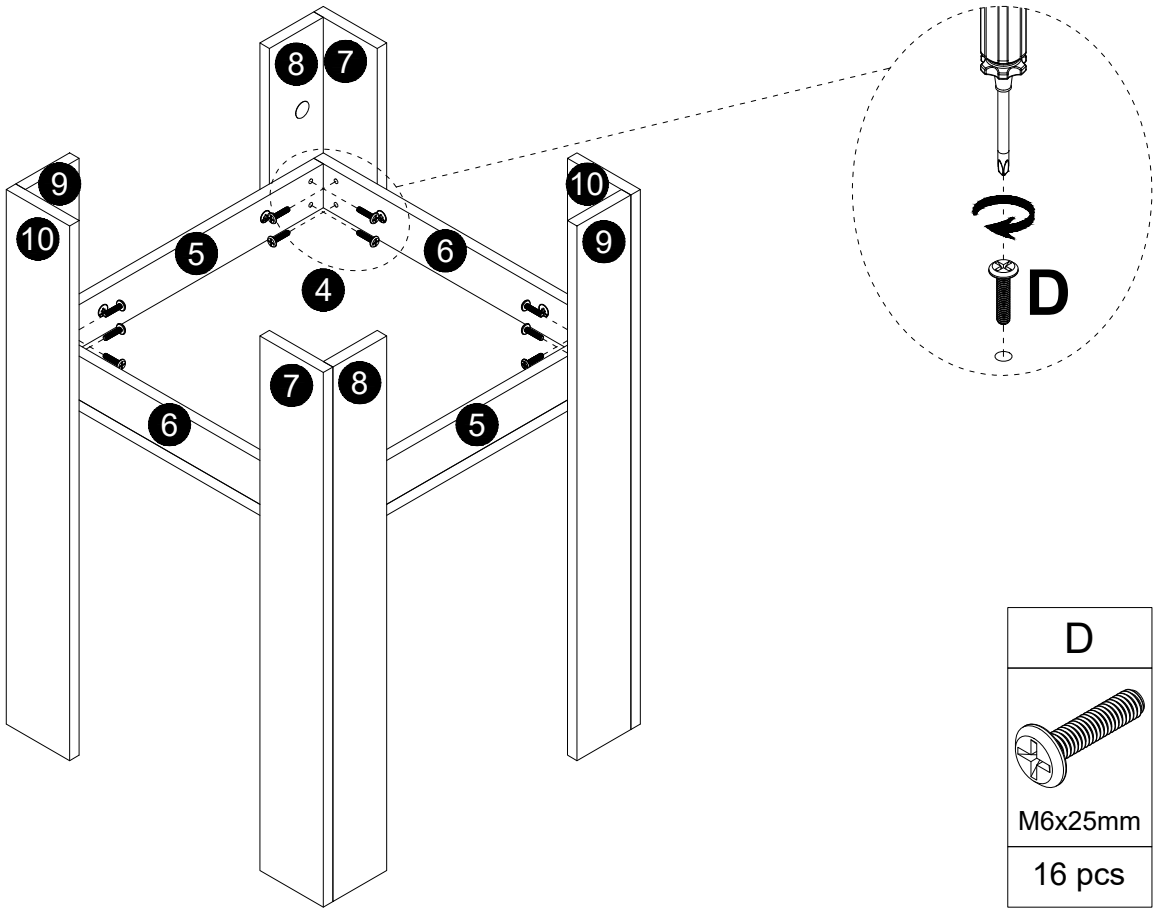

D
M6x25mm
16 pcs

10

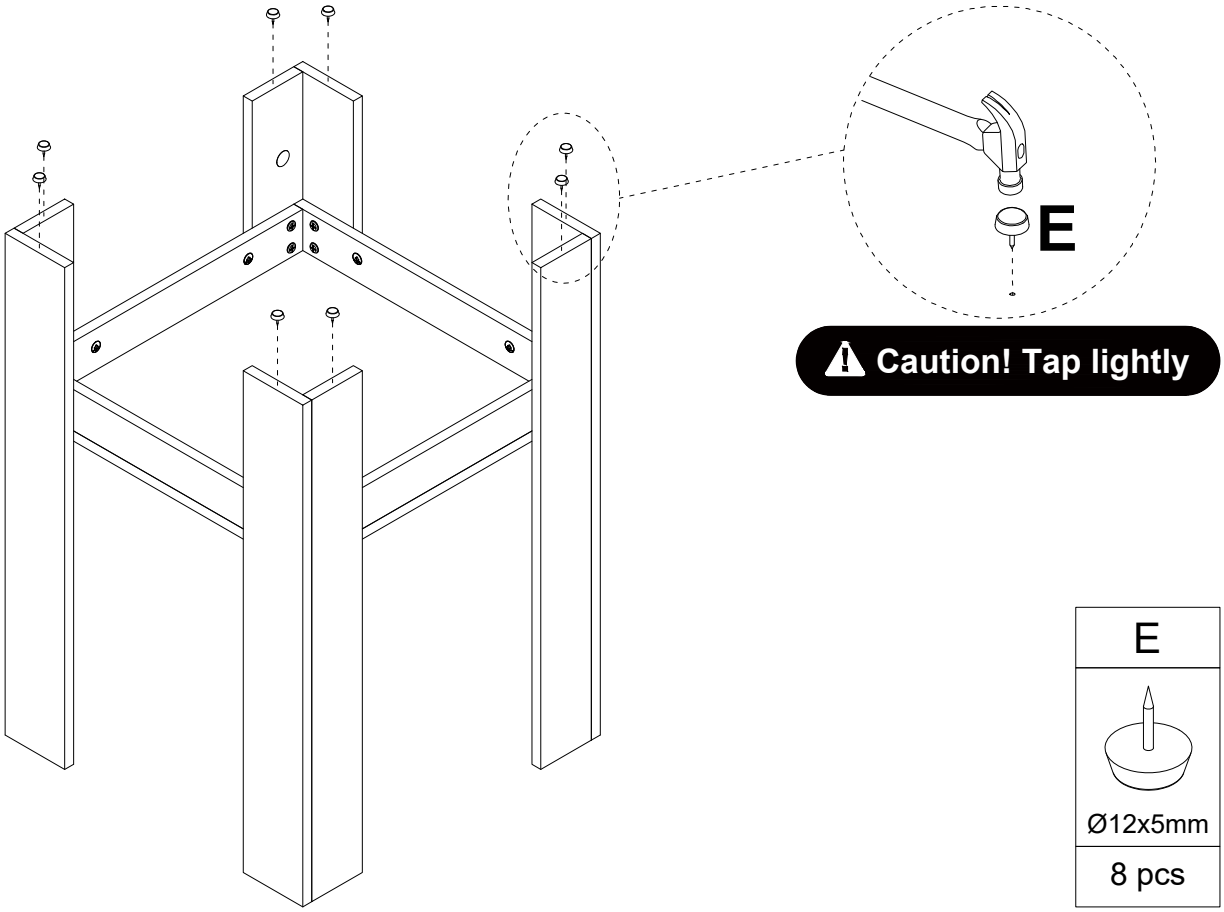

E
Ø12x5mm
8 pcs

11

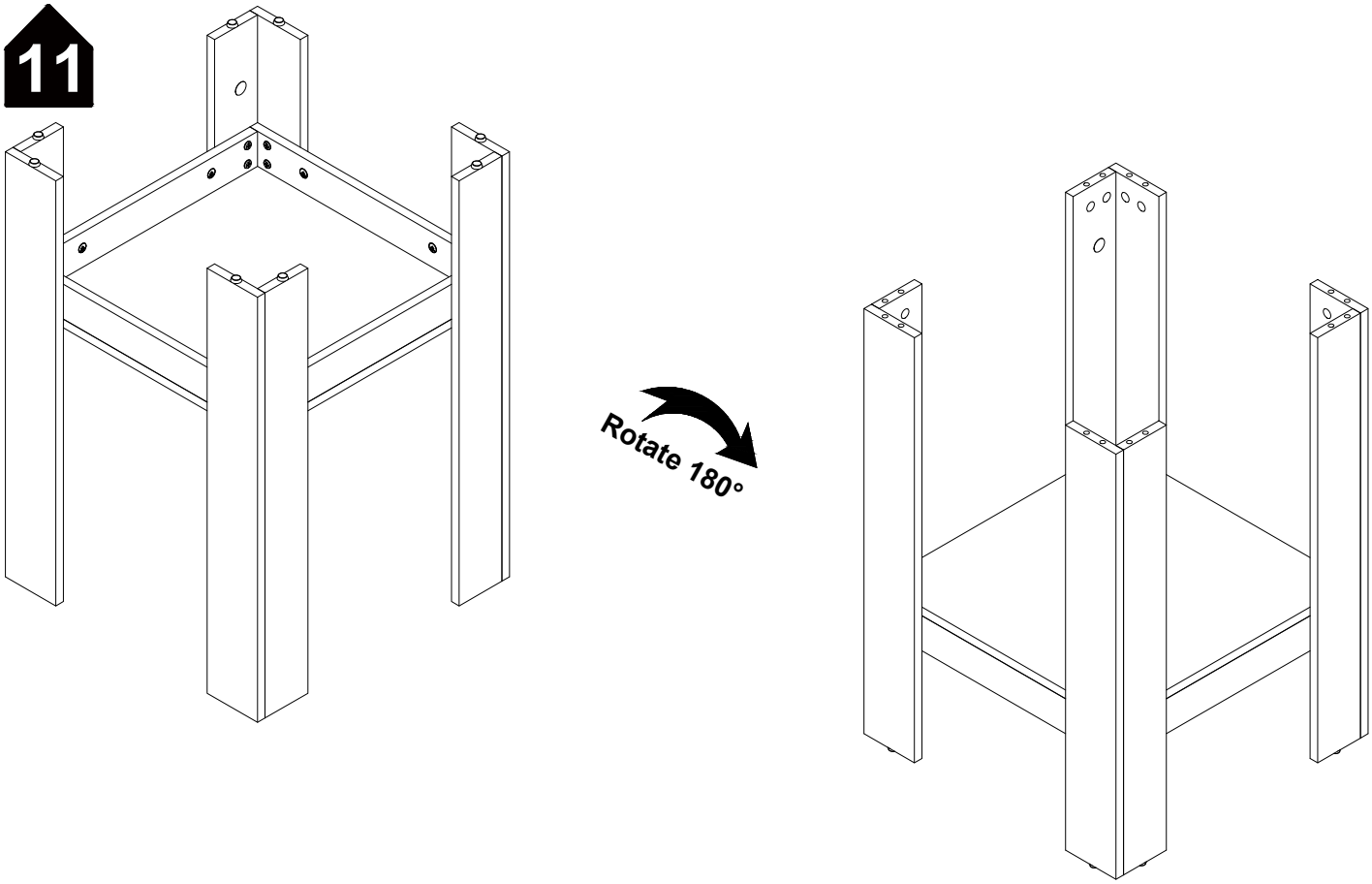

12

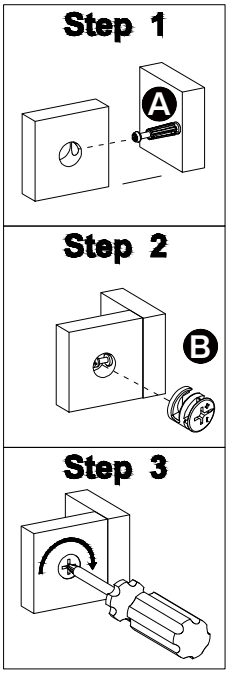

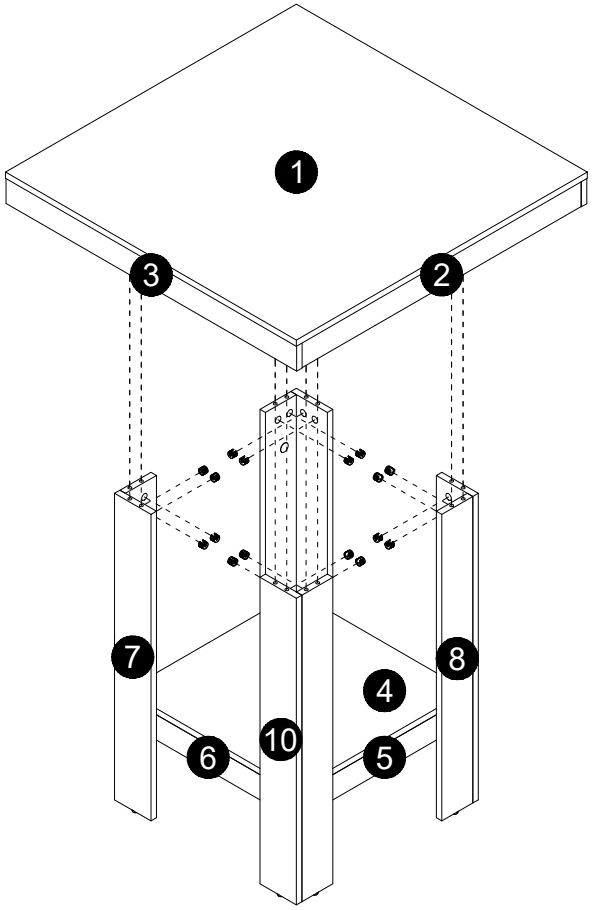

B
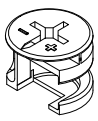
Ø15x12mm
16 pcs

Thank you for your support!

