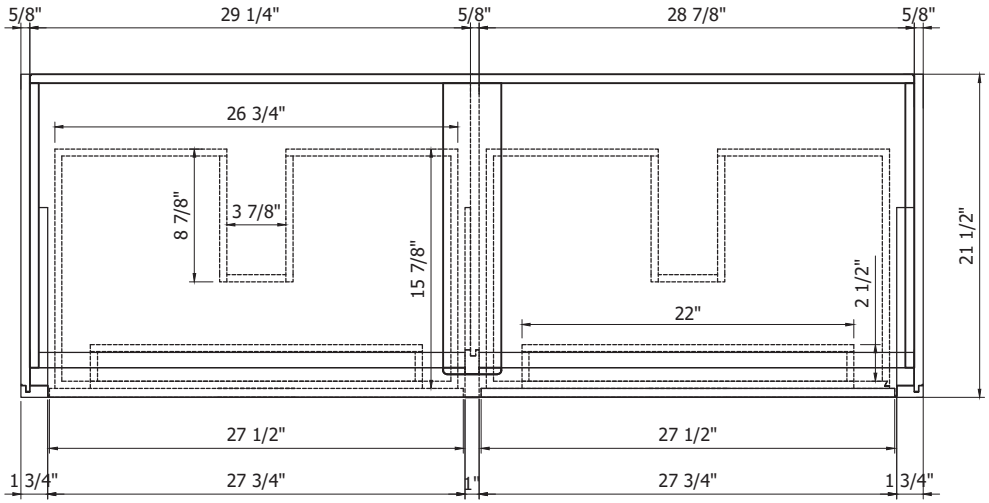
5/8"
29 1/4"
5/8"
28 7/8"
5/8"
26 3/4"
8 7/8"
3 7/8"
15 7/8"
2 1/2"
22"
21 1/2"
27 1/2"
27 1/2"
1 3/4"
27 3/4"
1"
27 3/4"
1 3/4"

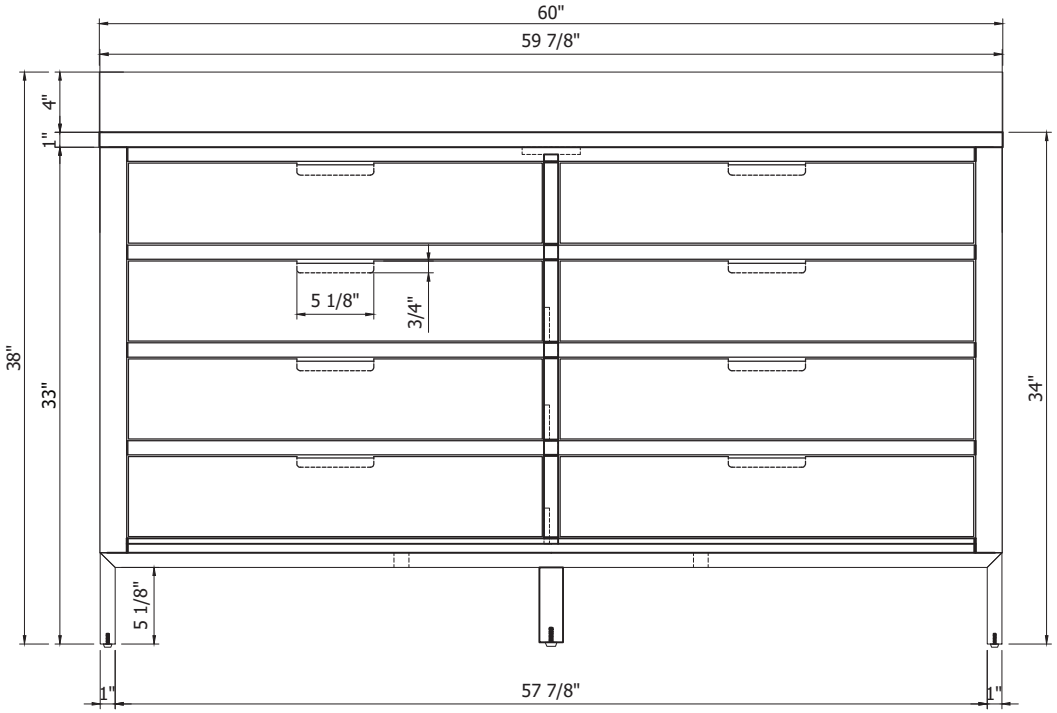
60"
59 7/8"
4"
1"
38"
33"
5 1/8"
3/4"
34"
5 1/8"
1"
57 7/8"
1"

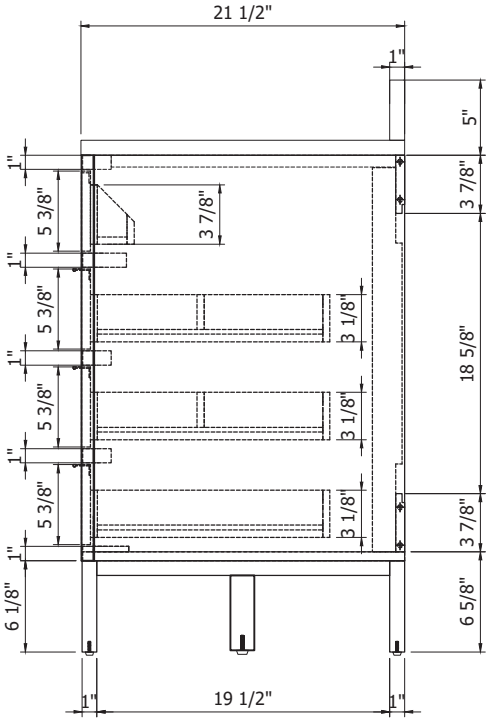
21 1/2"
1"
5"
1"
5 3/8"
3 7/8"
3 7/8"
1"
5 3/8"
3 1/8"
18 5/8"
1"
5 3/8"
3 1/8"
1"
5 3/8"
3 1/8"
3 7/8"
1"
6 1/8"
6 5/8"
1"
19 1/2"
1"

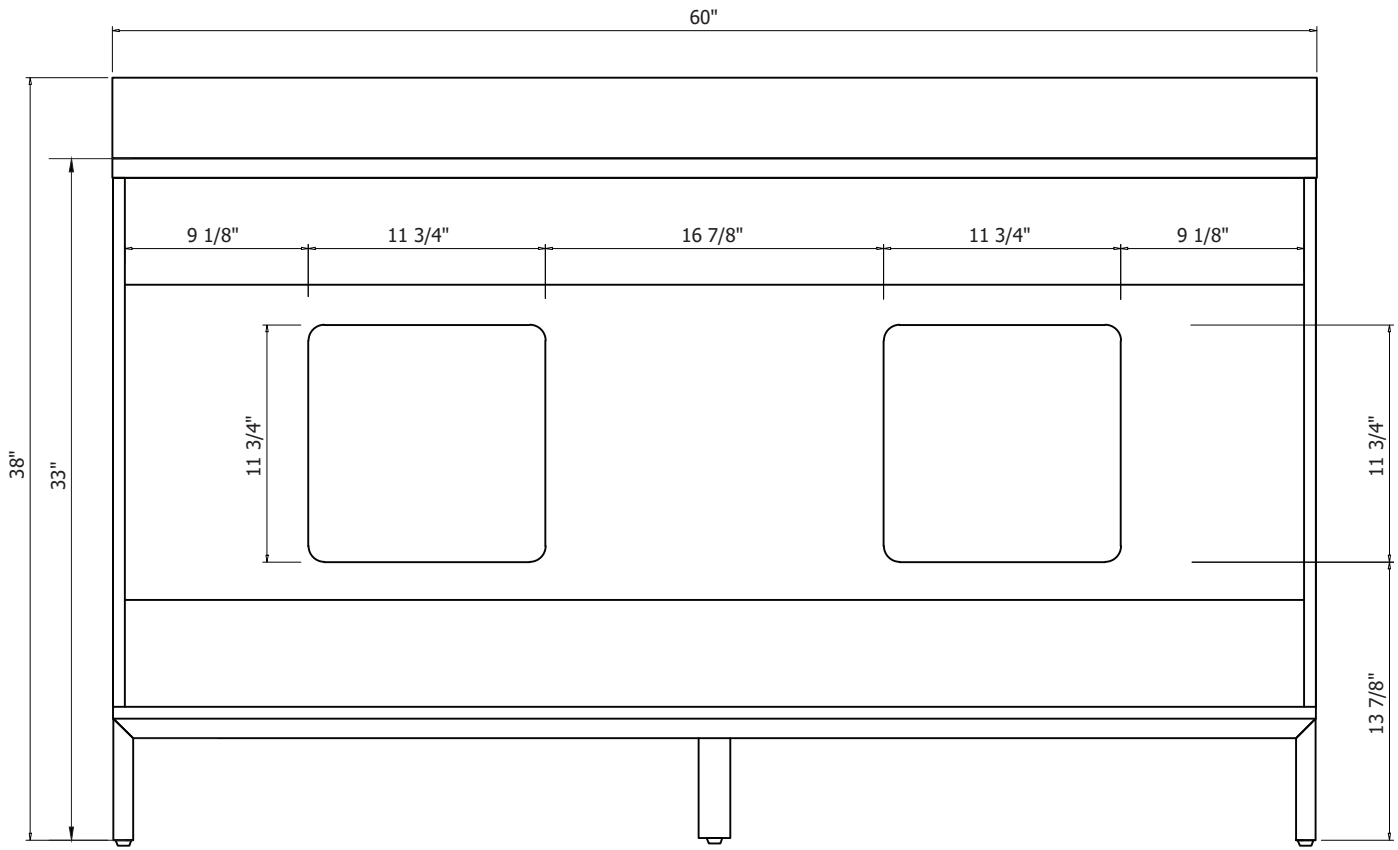
60"
9 1/8"
11 3/4"
16 7/8"
11 3/4"
9 1/8"
38"
33"
11 3/4"
11 3/4"
13 7/8"

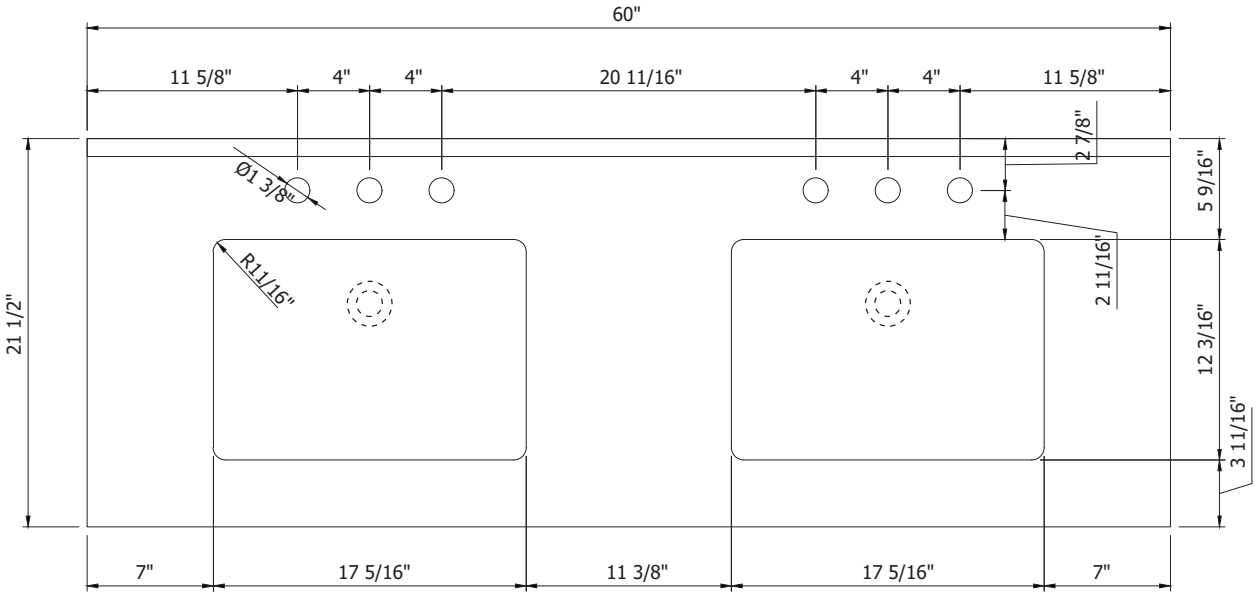
60"
11 5/8"
4"
4"
20 11/16"
4"
4"
11 5/8"
2 7/8"
Ø1 3/8"
5 9/16"
R1 1/16"
2 11/16"
21 1/2"
12 3/16"
3 11/16"
7"
17 5/16"
11 3/8"
17 5/16"
7"

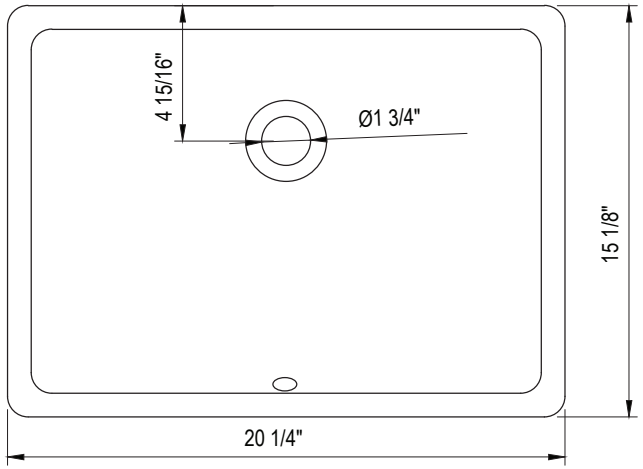
4 15/16"
Ø1 3/4"
15 1/8"
20 1/4"

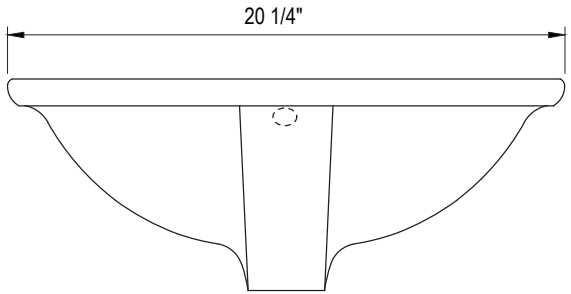
20 1/4"

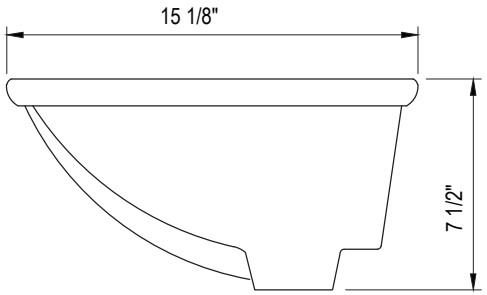
15 1/8"
7 1/2"

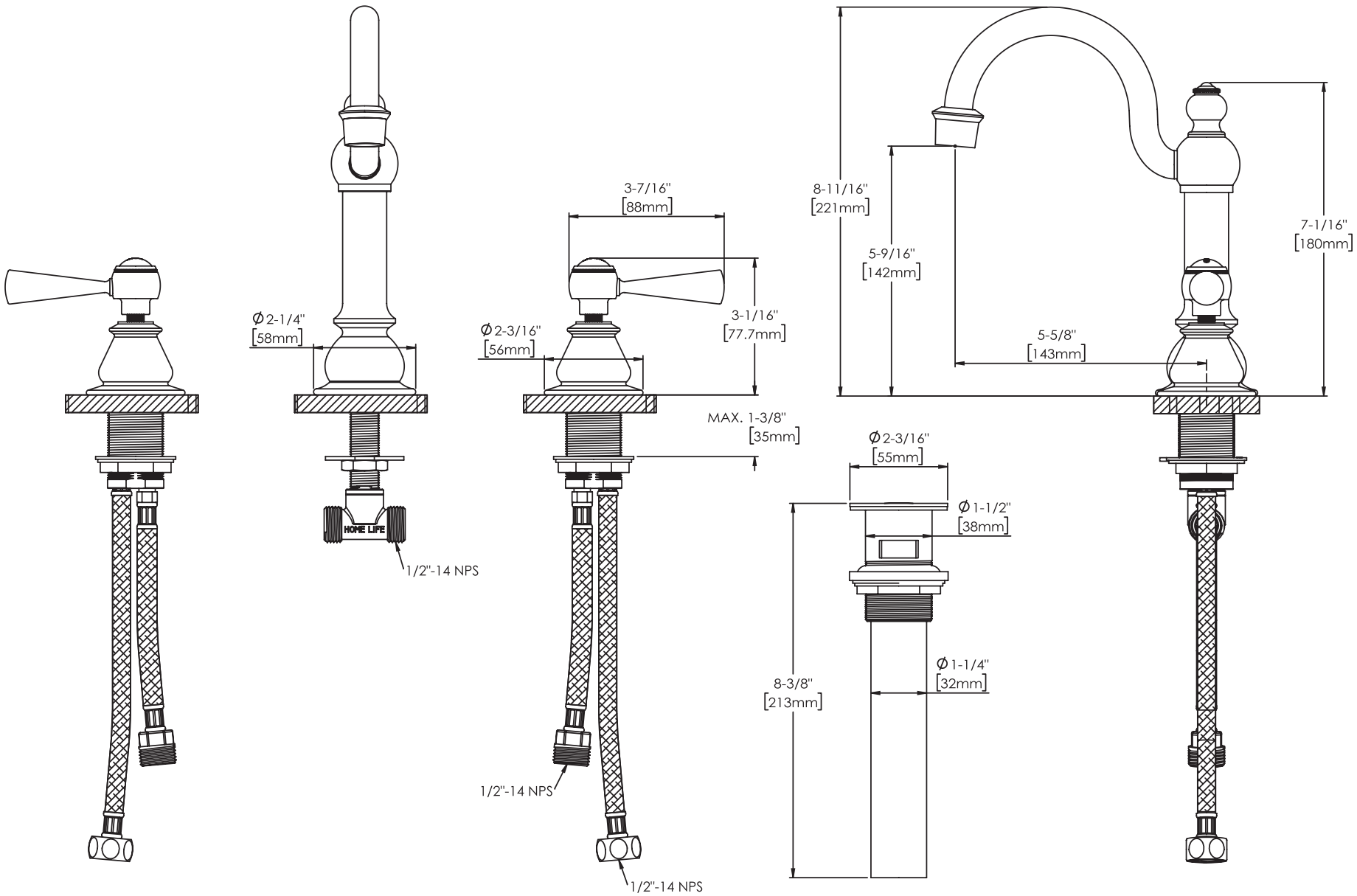
Ø2-1/4"
[58mm]
HOME LIFE
1/2"-14 NPS
3-7/16"
[88mm]
Ø2-3/16"
[56mm]
3-1/16"
[77.7mm]
MAX. 1-3/8"
[35mm]
1/2"-14 NPS
1/2"-14 NPS
8-11/16"
[221mm]
5-9/16"
[142mm]
5-5/8"
[143mm]
7-1/16"
[180mm]
Ø2-3/16"
[55mm]
Ø1-1/2"
[38mm]
Ø1-1/4"
[32mm]
8-3/8"
[213mm]

2024-12-19