INSTALLATION

Product Manual

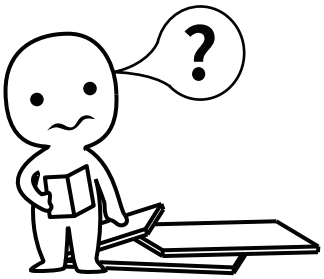

IMPORTANT INFORMATION!

Please read the entire manual before starting to assemble and/or using this product. Follow the manual thoroughly and keep it for further reference.

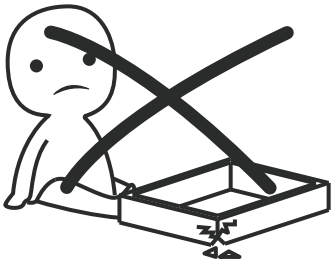

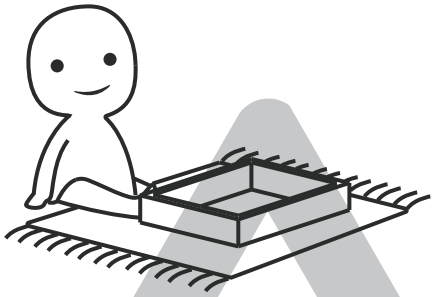

AVOID SCRATCHES!

In order to avoid scratching this furnuture should be assembled on a soft layer-could be a rug.

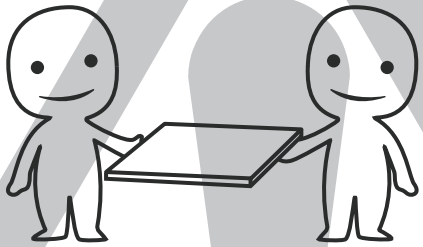

IMPROVE EFFICIENCY !

Try to find a partner to install with you, which can speed up the installation efficiency and shorten the time.

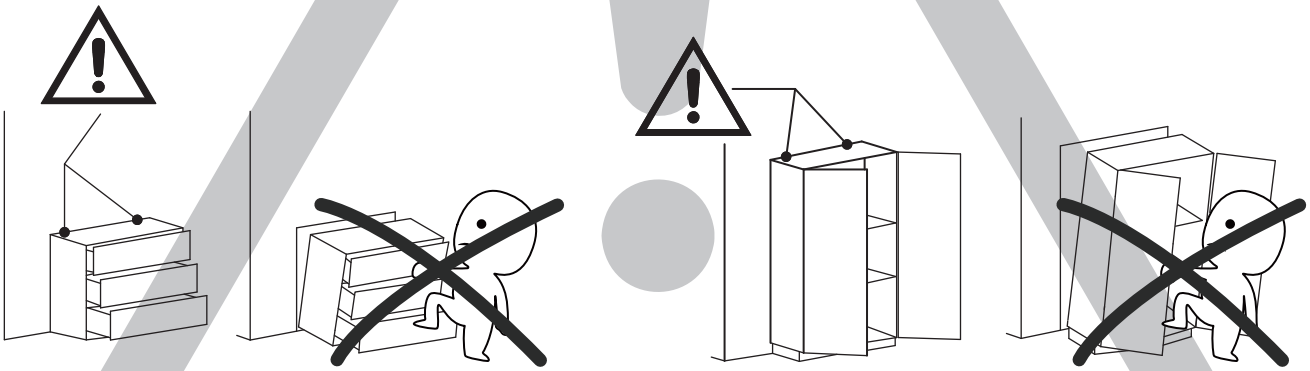

ANTI-TOPPLE WARNING !

Overturned furniture can cause serious or fatal crush injuries. To prevent tipping over, be sure to use the wall attachment, if not included with this product. Please purchase the wall attachment that fit your wall. If unsure, seek professional advice. Please read and follow each step of the instructions carefully.

IMPORTANT !

It is important that any product which is assembled using any kind of screw is re-tightened 2 weeks after assembly,and once every 3 months - in order to assure stability through-out the lifespan of the product.

For regular maintenance and cleaning of the product, for the frame, please use a rag dipped in neutral detergent to fully wipe it, and then dry it with a clean rag.For glass materials, wipe with a rag dampened with water glass cleaner, and then dry with a dry rag.

Do not use an electric screwdriver, and do not use too much force when installing, because the board is easy to break.

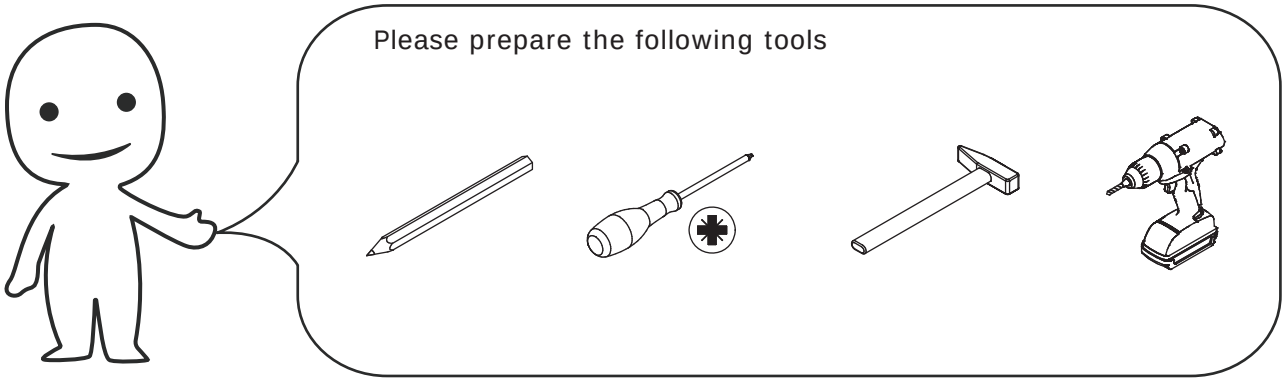

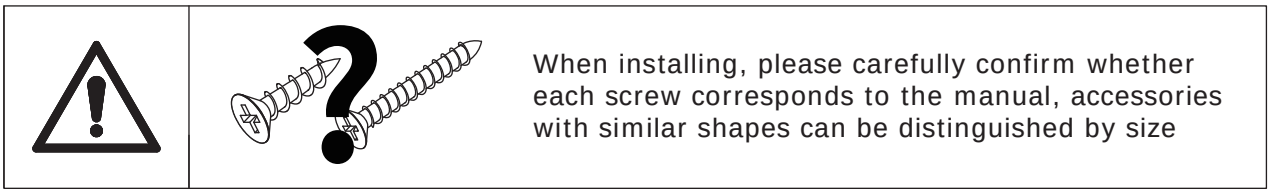

A x 47	B x 47	C x 47	D x 36	E x 3
∅15 x 10 mm	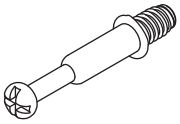 ∅6 x 35 mm		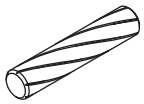 ∅6 x 30 mm	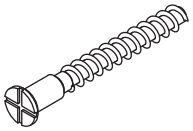 ∅5 x 40 mm

F x 8	G x 78	H x 4	J x 8	K x 3
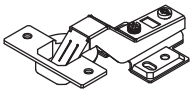	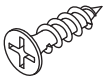 ∅3.5 x 14 mm	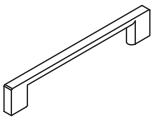	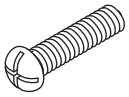 ∅4 x 18 mm	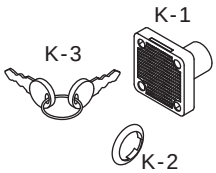

L x 12	M x 4	N x 2	P x 14	Q x 20
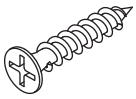 ∅3.5 x 20 mm	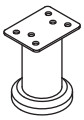	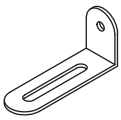	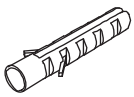 ∅8 x 38 mm	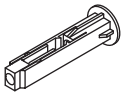

R x 16	S x 24	T x 4	U x 1	V x 1
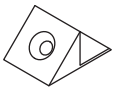	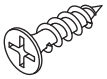 ∅3 x 14 mm	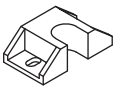	Left 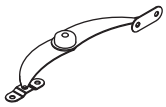	Right 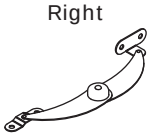

W x 1	X x 8	Y x 6	Z x 6
W-1(Left) W-2(Right) W-3 W-4 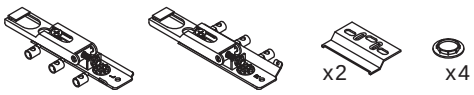 x2 x4	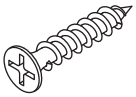 ∅3.5 x 25 mm	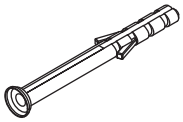 ∅8 x 80 mm	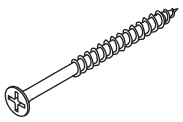 ∅5 x 80 mm

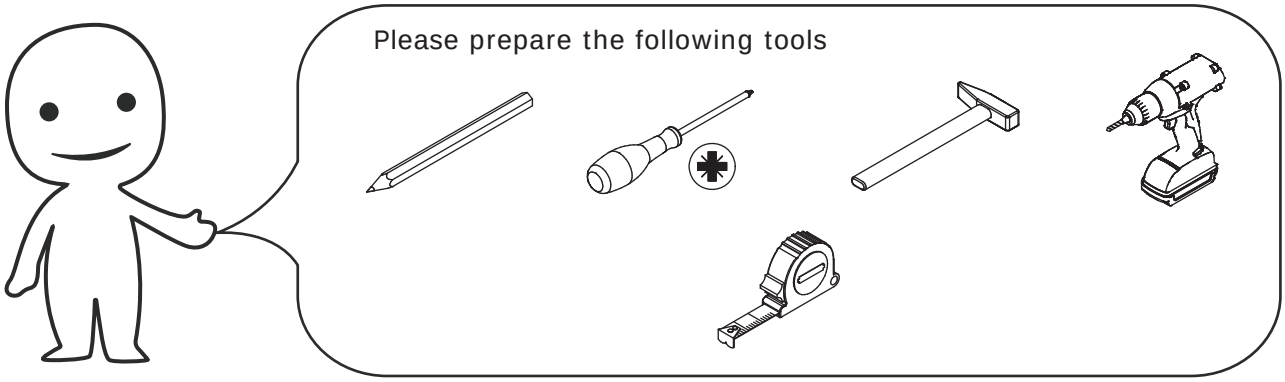

When installing, please carefully confirm whether each screw corresponds to the manual, accessories with similar shapes can be distinguished by size

AA x 4	BB x 4	CC x 1	DD x 1	EE x 20
∅6 x 12 mm		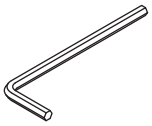	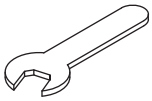	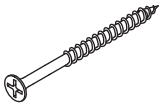 ∅4 x 68 mm

FF x 1	GG x 2
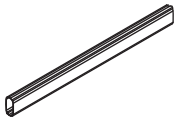	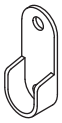

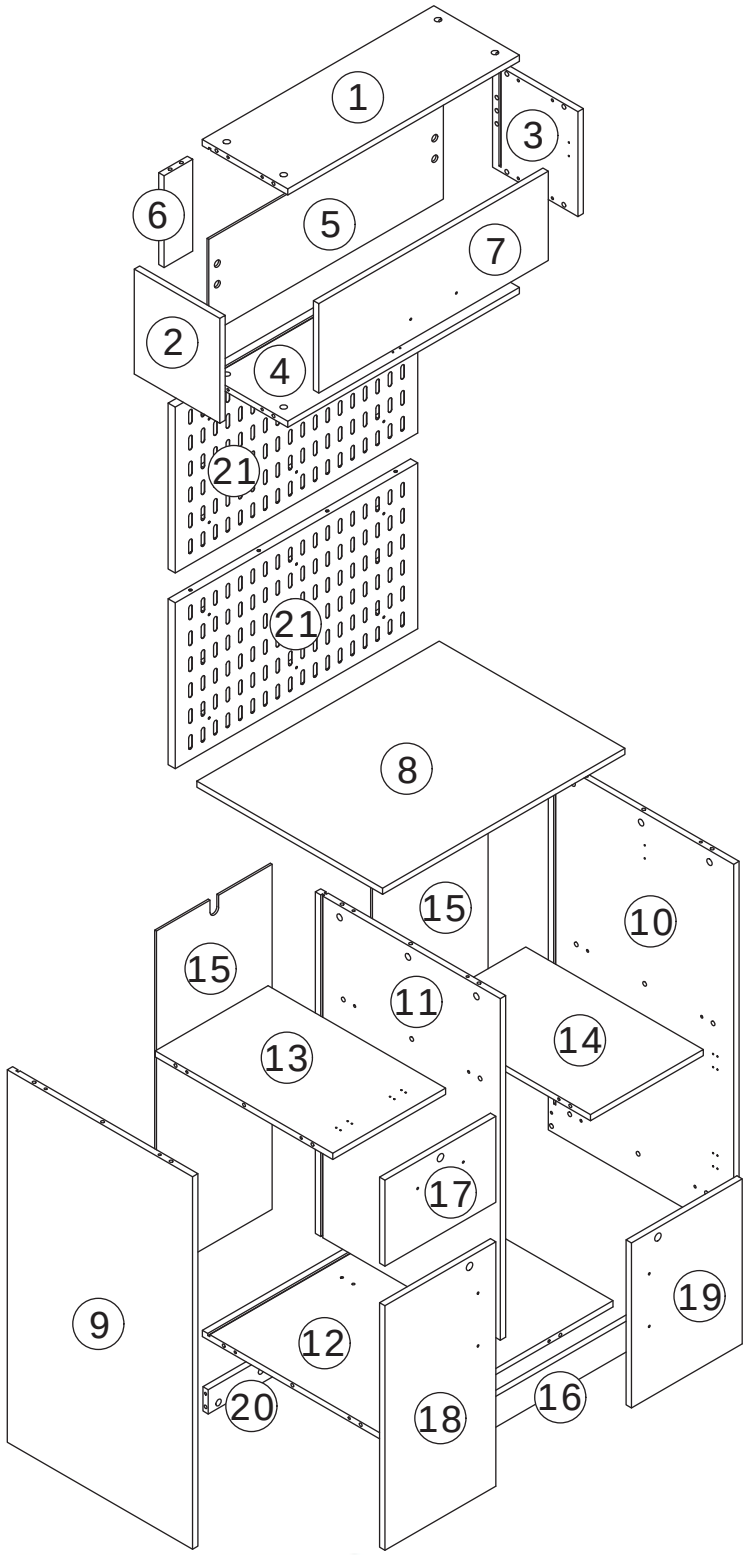

⚠WARNING

Children have died from furniture tipover.To reduce the risk of furniture tipover:

- ALWAYS install Anti-tip device provided.
- NEVER put a TV on this product.
- NEVER allow children to stand,climb or hang on drawers,doors,or shelves.
- NEVER open more than one drawer at a time.
- Place heaviest items in the lowest drawers.

This is a permanent label.
Do not remove!

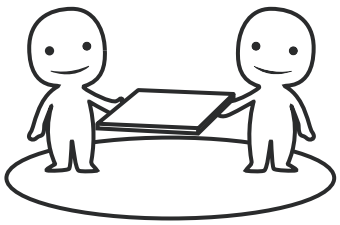

ASSEMBLED BY 2 ADULTS

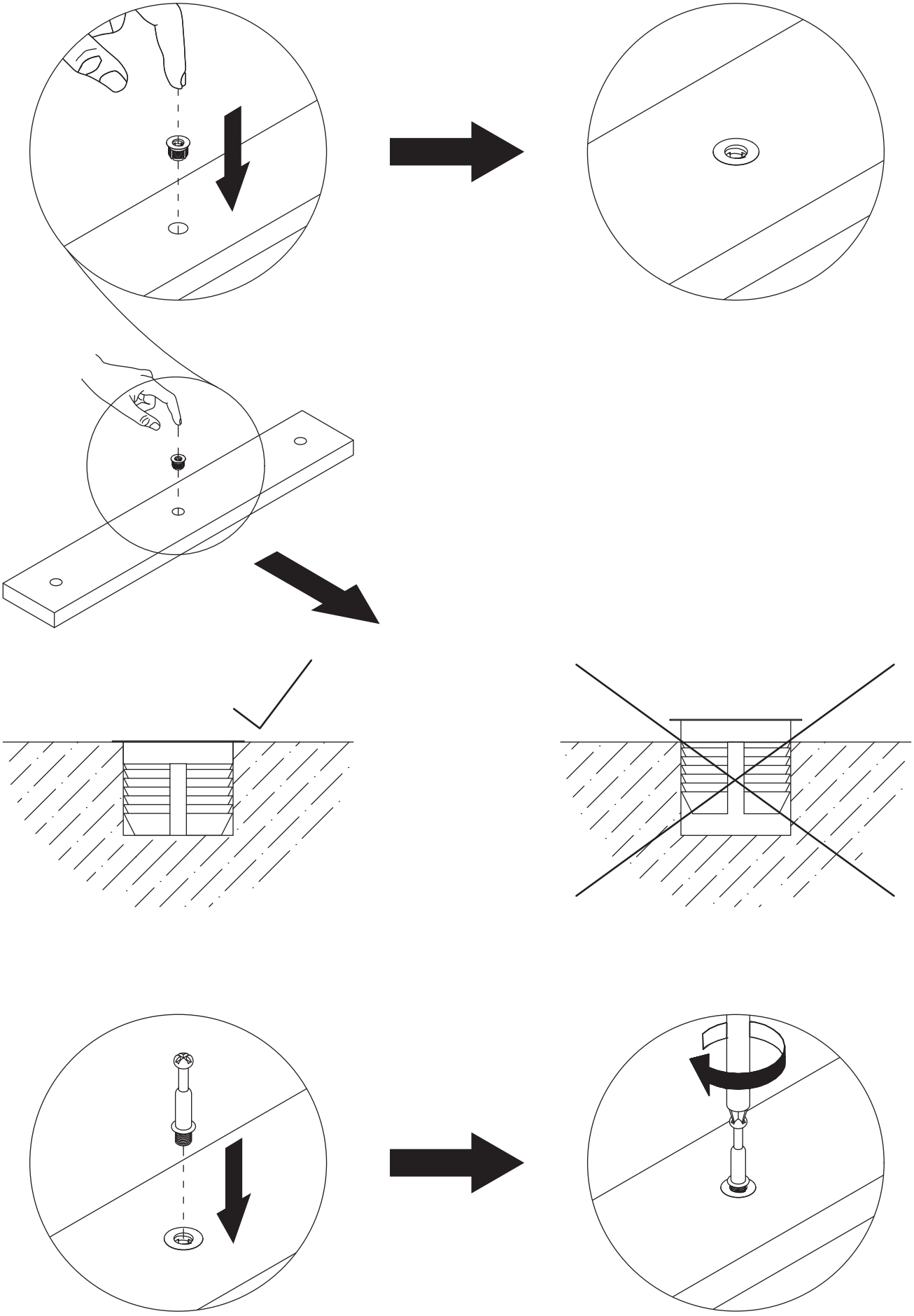

1

B x 3	C x 6	G x 2	GG x 1	
∅6 x 35 mm		∅3.5 x 14 mm		

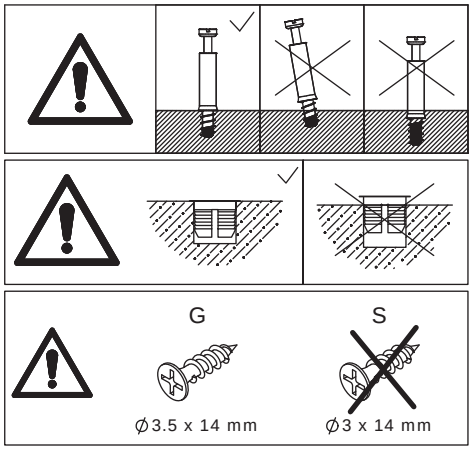

Install plug (C) onto **both sides of** panel 11, then screw self-tapping rod (B) into panel 11.

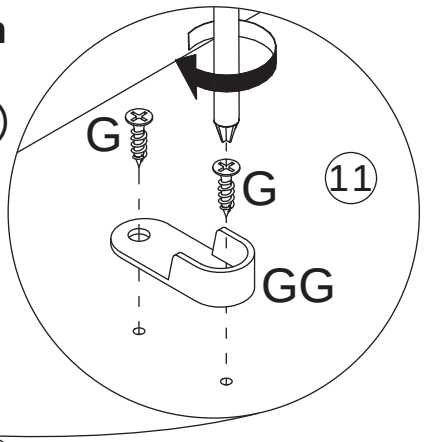

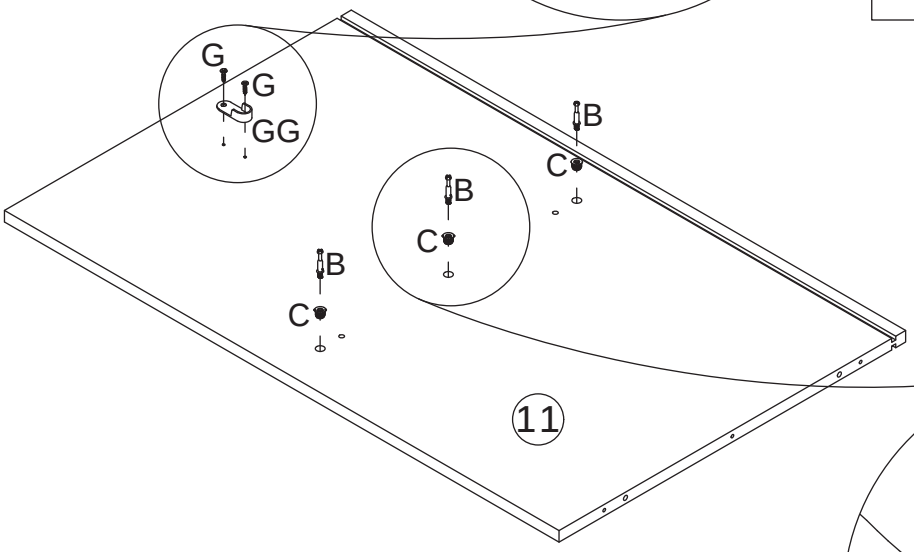

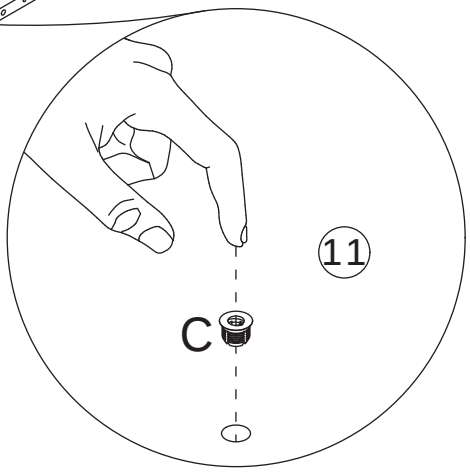

Flip to the other side

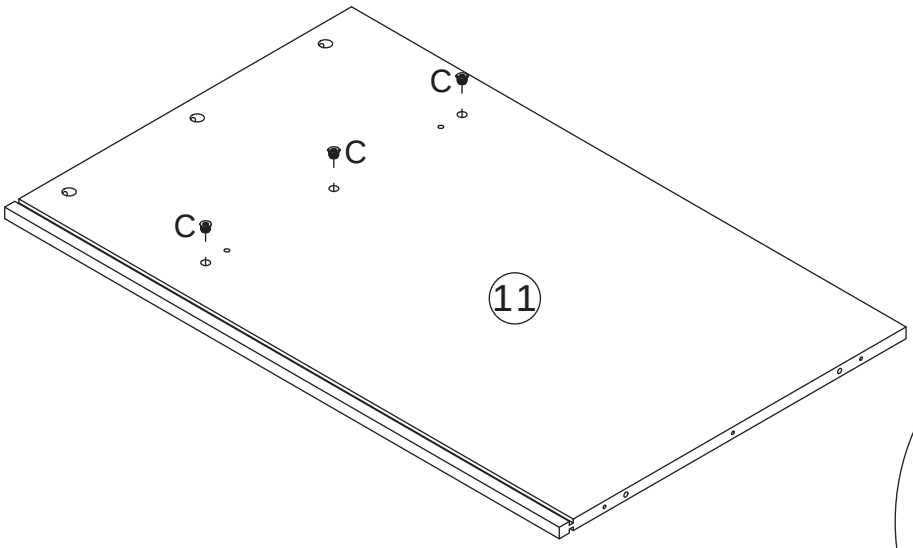

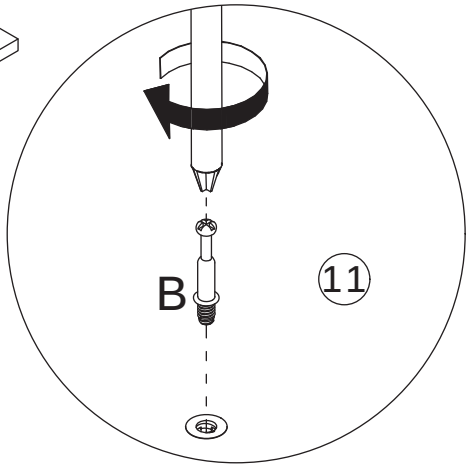

Secure part (GG) to panel 11 using screw (G).

2

S x 4	T x 2	
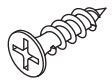 ∅3 x 14 mm	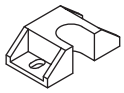	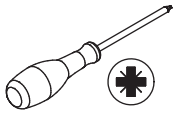

	G	S
	∅3.5 x 14 mm	∅3 x 14 mm

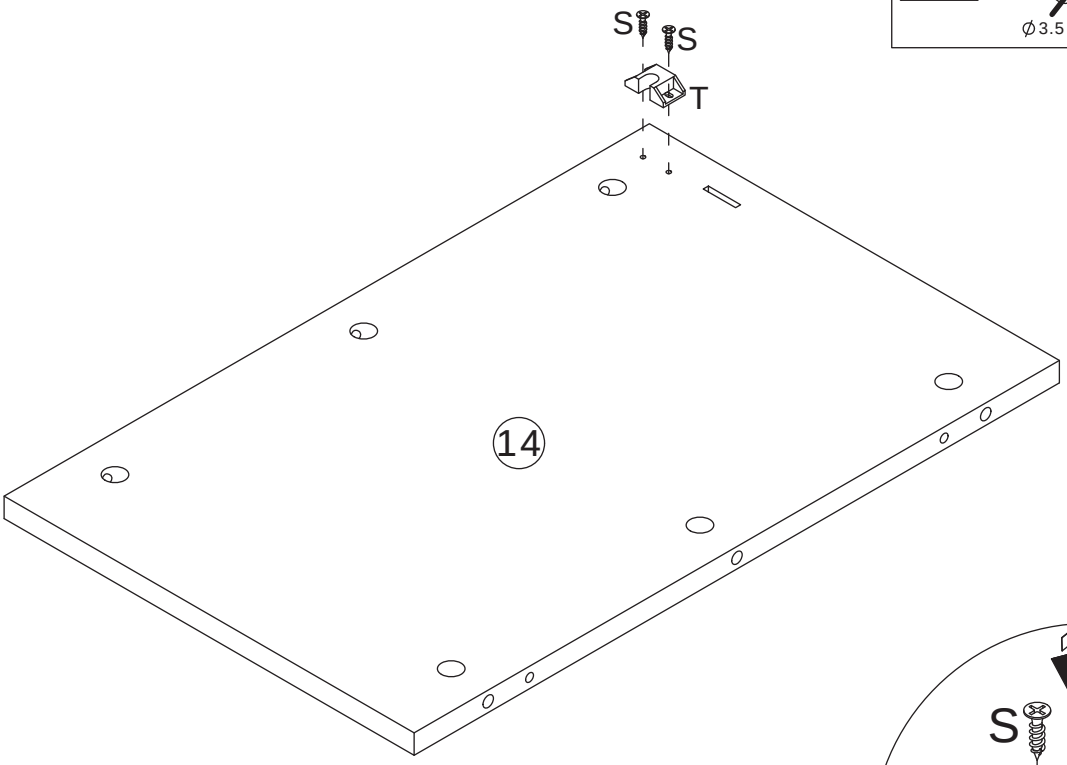

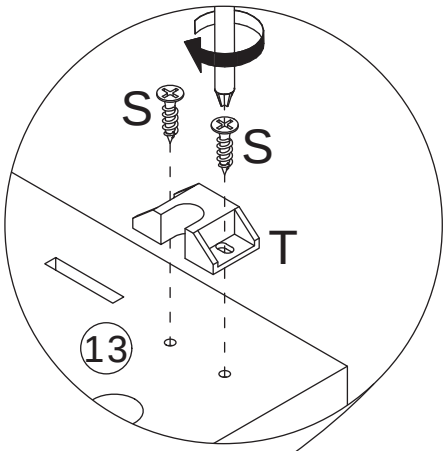

Secure part (T) to panels 14 and 13 using screw (S).

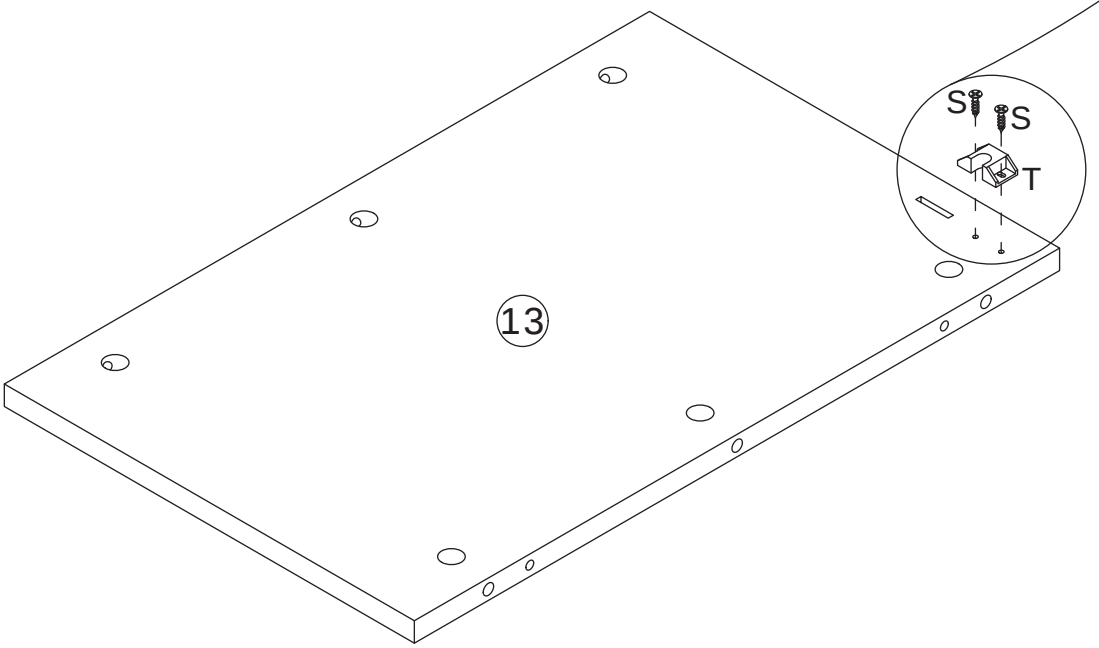

3

A x 3	D x 2	
	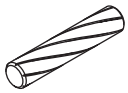	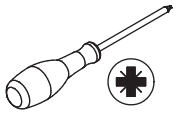
∅15 x 10 mm	∅6 x 30 mm	

Connect panel 14 to panel 11 using wooden dowel (D), then tighten by turning cam lock (A) clockwise.

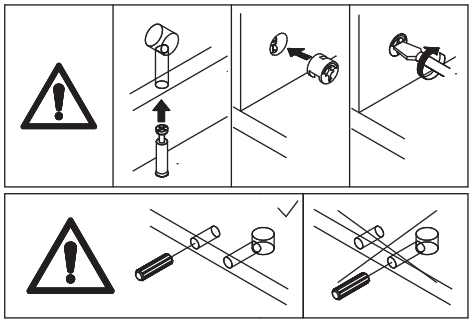

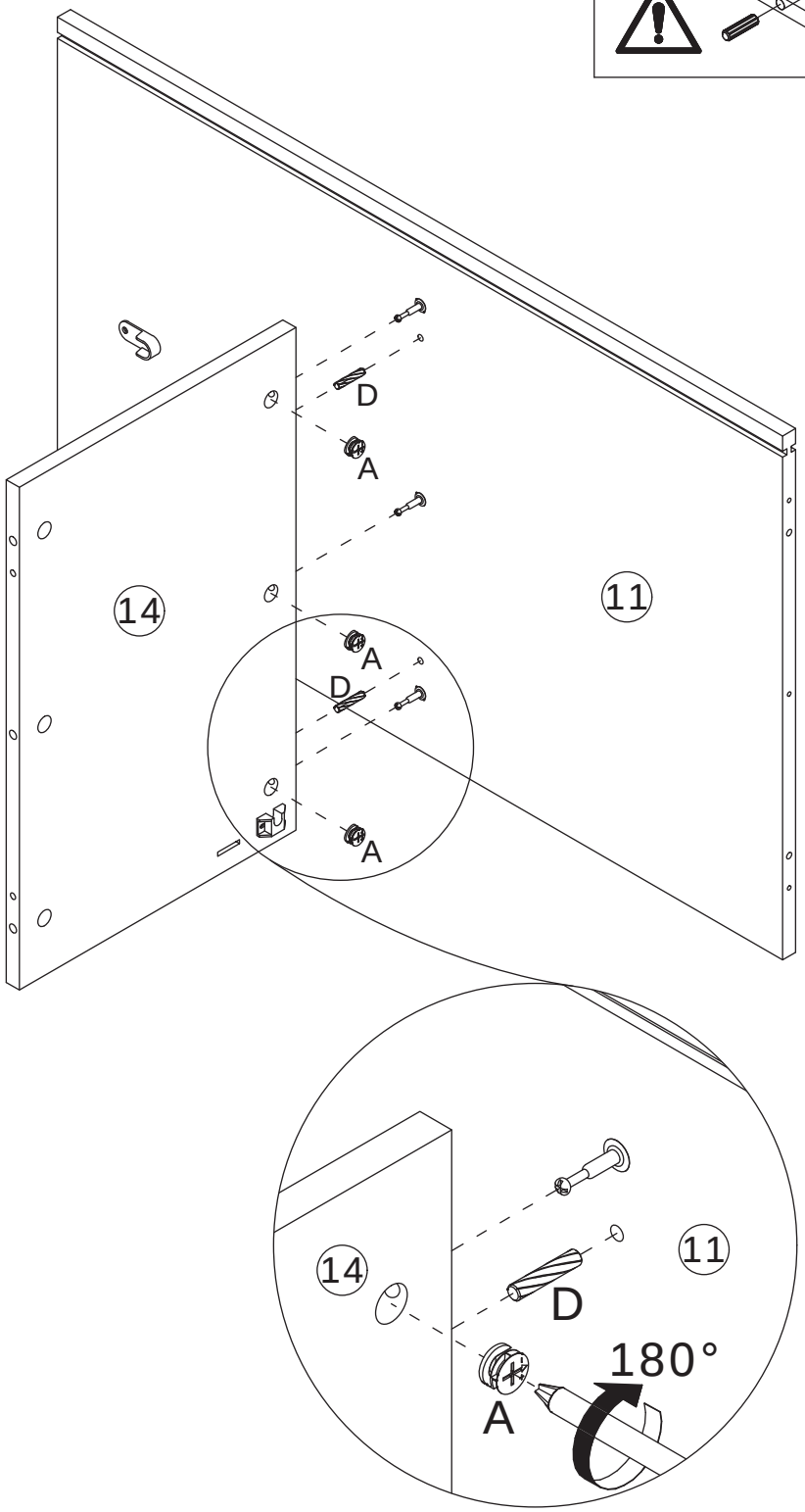

4

B x 4	C x 4	
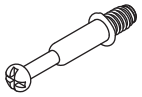 ∅6 x 35 mm		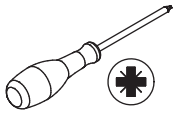

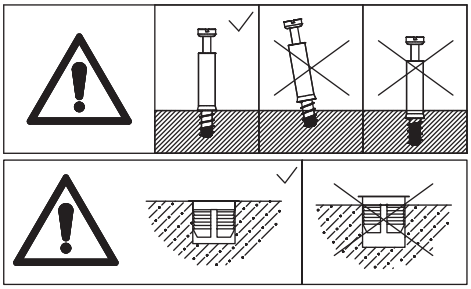

Install plug (C) onto panels 12 and 16, then screw self-tapping rod (B) into panels 12 and 16.

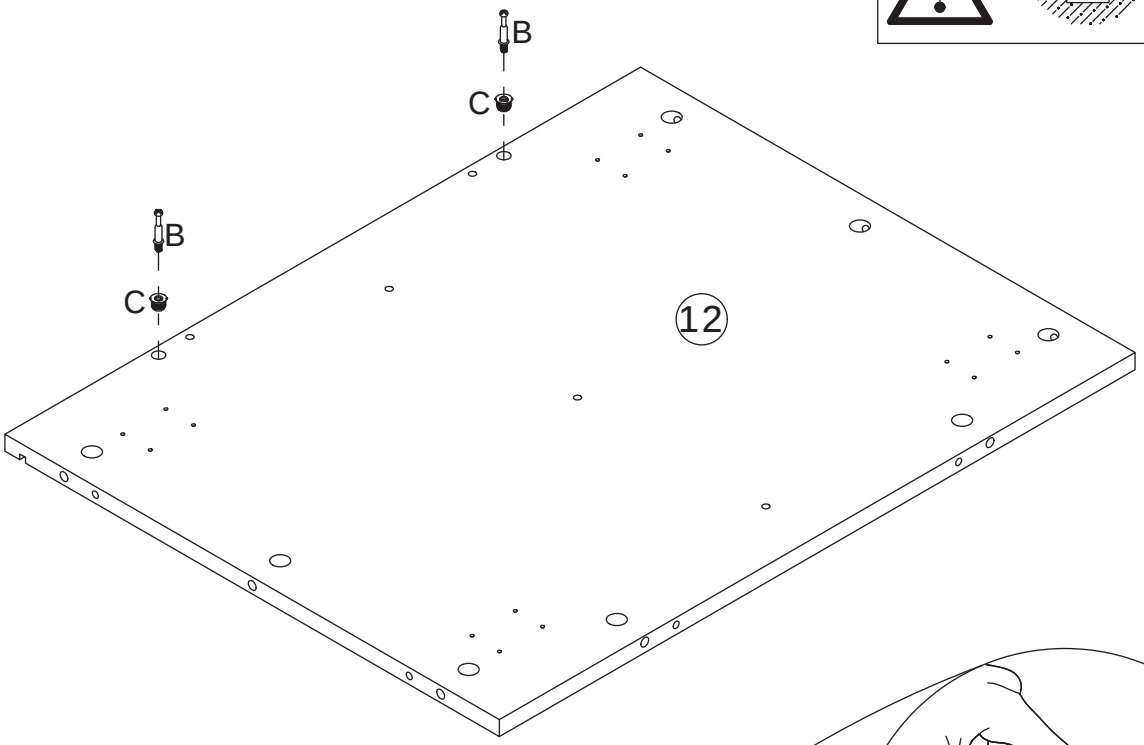

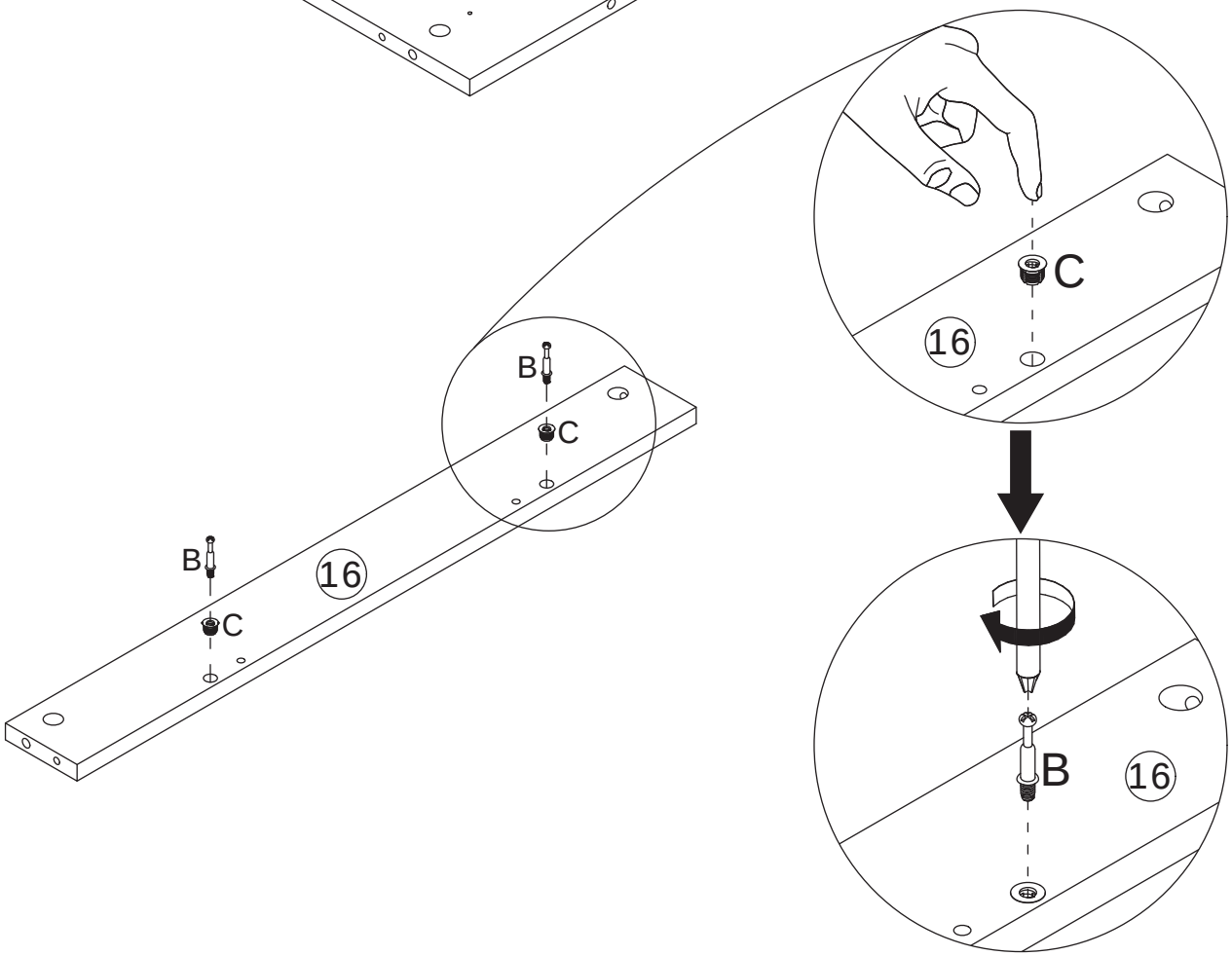

5

A x 2	D x 2	
	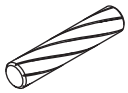	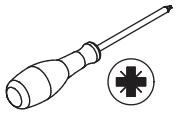
∅15 x 10 mm	∅6 x 30 mm	

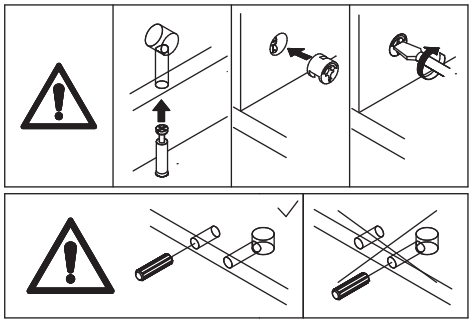

Connect panel 20 to panel 12 using wooden dowel (D), then tighten by turning cam lock (A) clockwise.

6

A x 2	D x 2	
	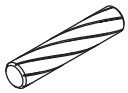	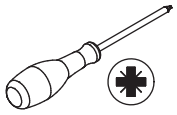
∅15 x 10 mm	∅6 x 30 mm	

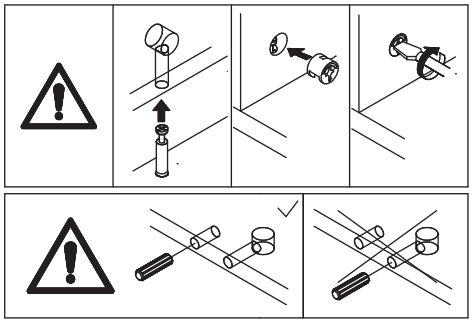

Connect panel 16 to panel 12 using wooden dowel (D), then tighten by turning cam lock (A) clockwise.

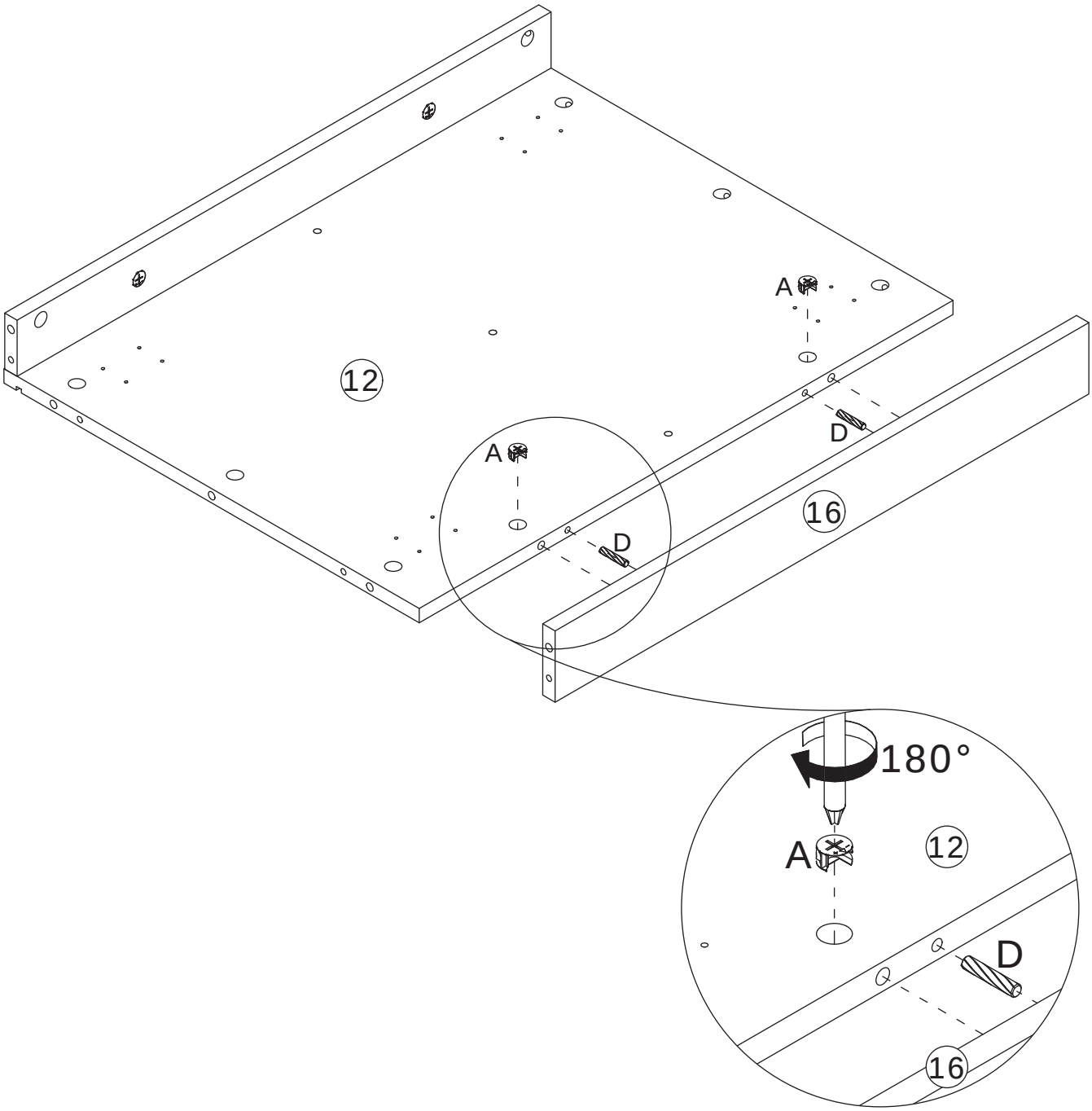

7

D x 2	E x 3	
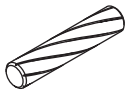	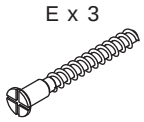	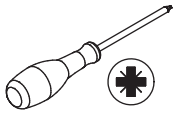
∅6 x 30 mm	∅5 x 40 mm	

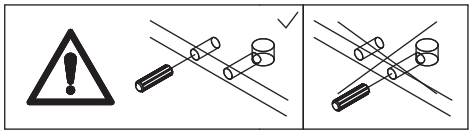

Connect panel 12 to panel 11 using wooden dowel (D) and secure them with screw (E).

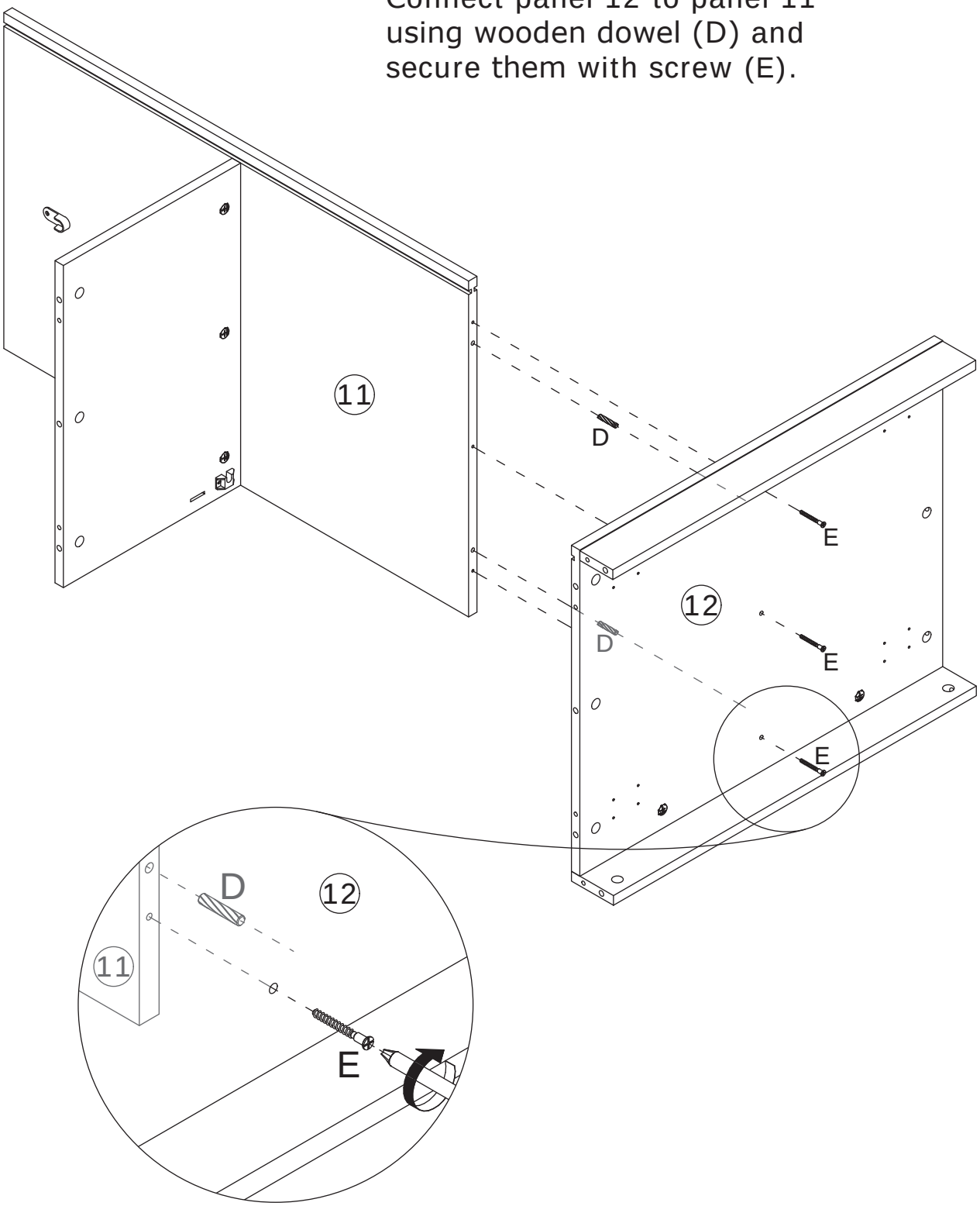

8

B x 3

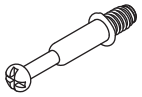

∅6 x 35 mm

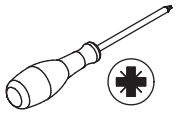

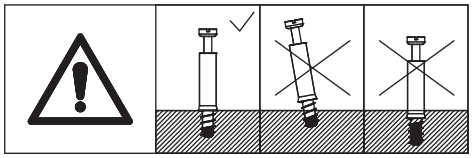

Screw self-tapping rod (B) into panel 11.

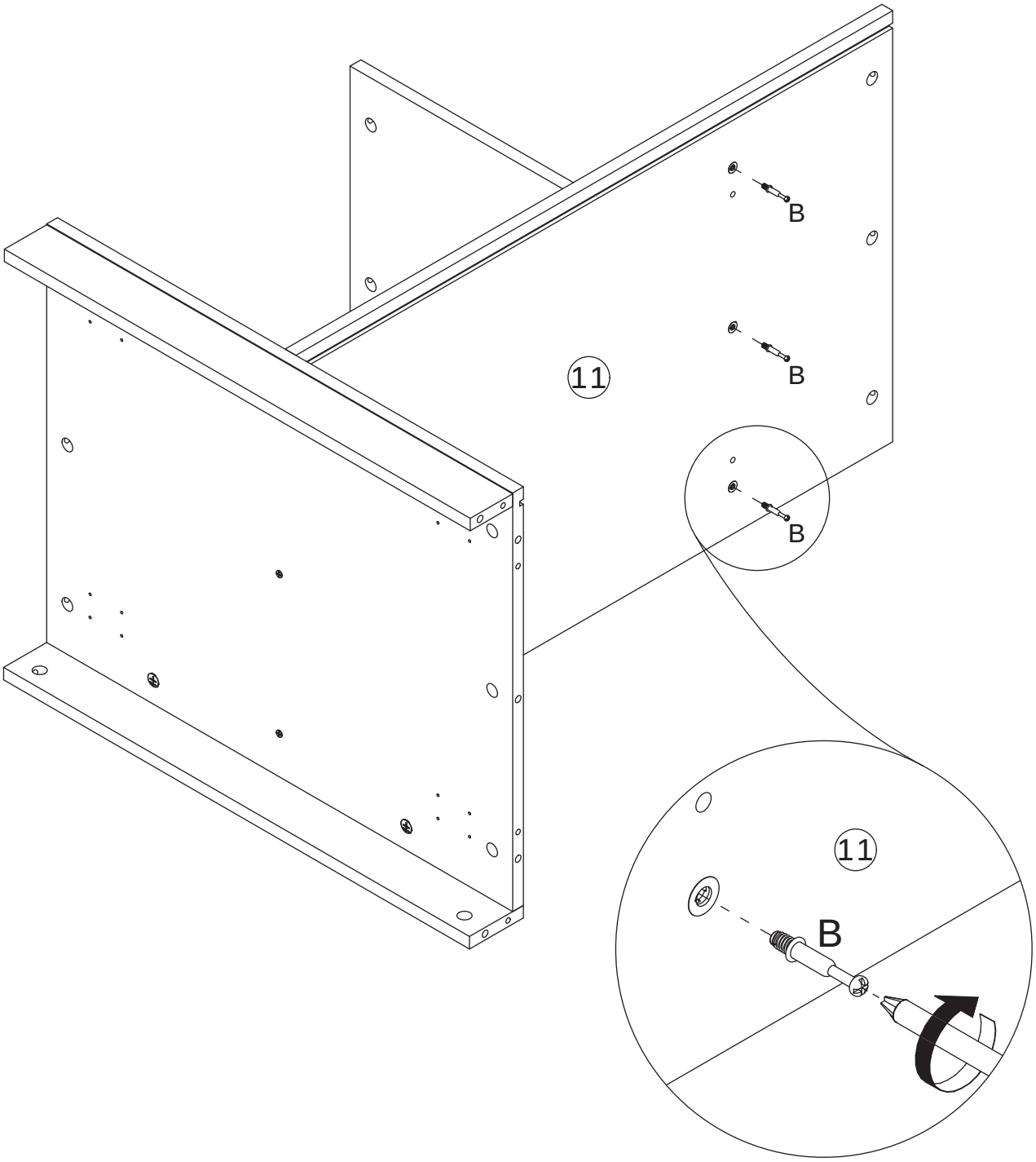

9

A x 3	D x 2	
	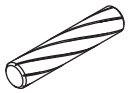	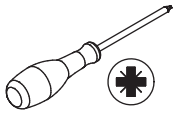
∅15 x 10 mm	∅6 x 30 mm	

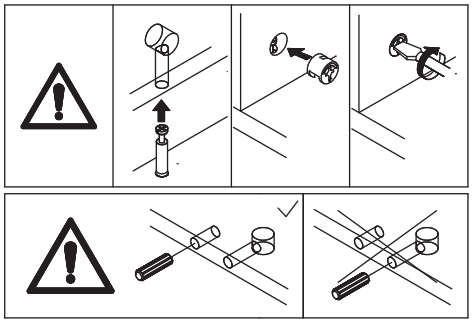

Connect panel 13 to panel 11 using wooden dowel (D), then tighten by turning cam lock (A) clockwise.

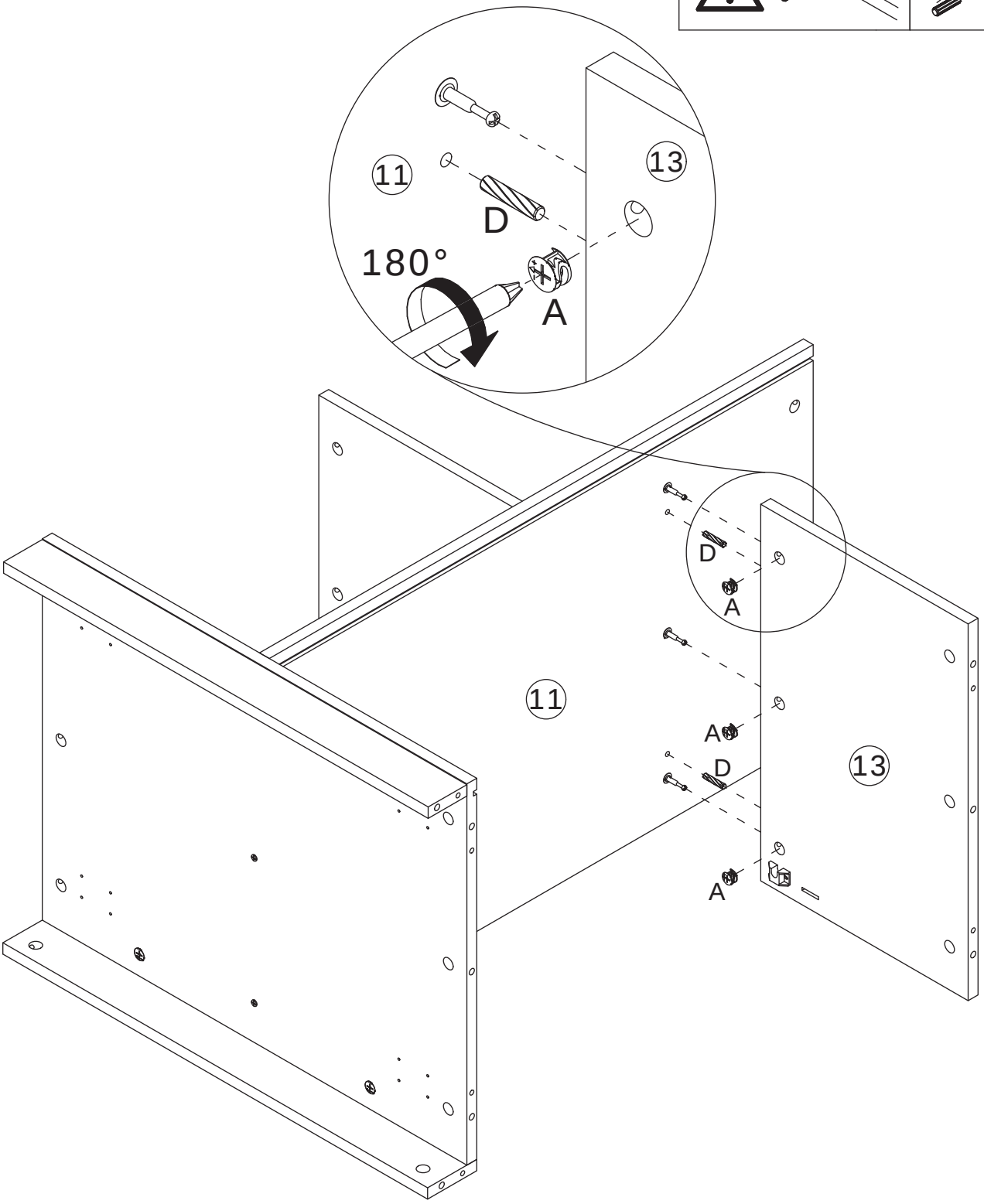

10

B x 16	C x 16	G x 2	GG x 1	
∅6 x 35 mm		∅3.5 x 14 mm		

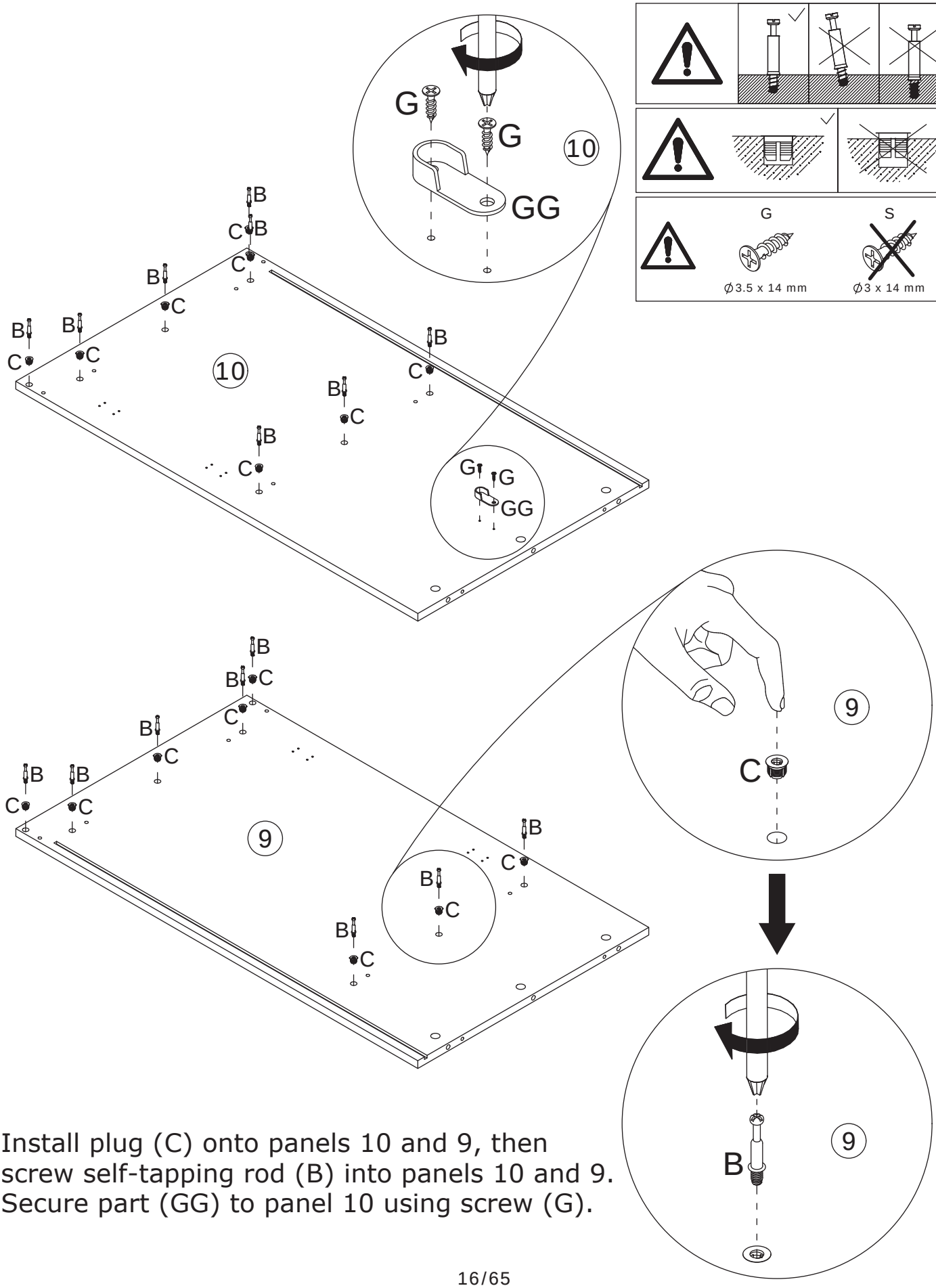

Install plug (C) onto panels 10 and 9, then screw self-tapping rod (B) into panels 10 and 9. Secure part (GG) to panel 10 using screw (G).

11

A x 8	D x 6	
	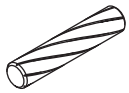	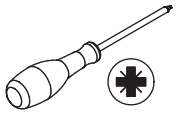
∅15 x 10 mm	∅6 x 30 mm	

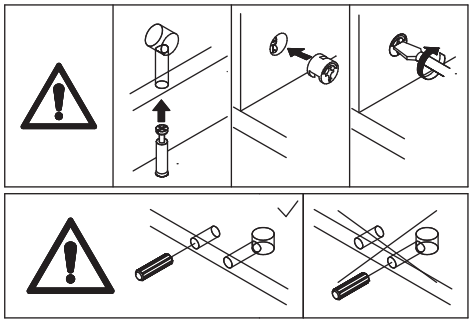

Connect panel 9 to panel 12, 16, 20, and panel 13 using wooden dowel (D), then tighten by turning cam lock (A) clockwise.

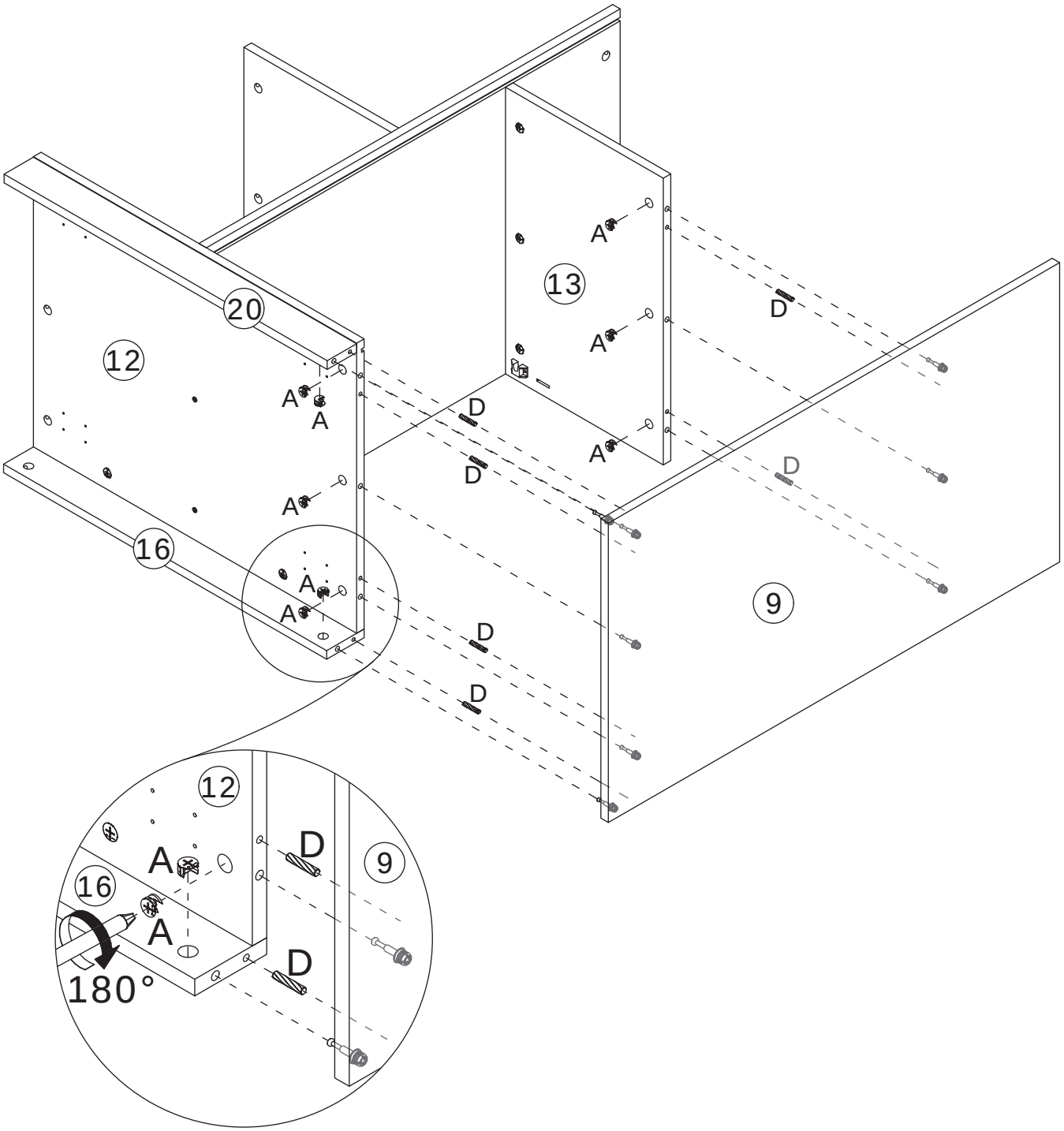

12

A x 8	D x 6	
	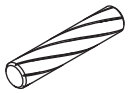	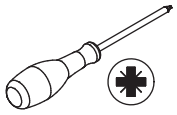
∅15 x 10 mm	∅6 x 30 mm	

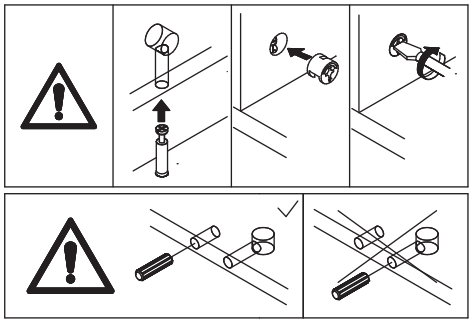

Connect panel 10 to panel 12, 20, 16, and panel 14 using wooden dowel (D), then tighten by turning cam lock (A) clockwise.

13

Flip the cabinet and insert panel 15 into the available slots.
Pay attention to the installation direction of panel 15.

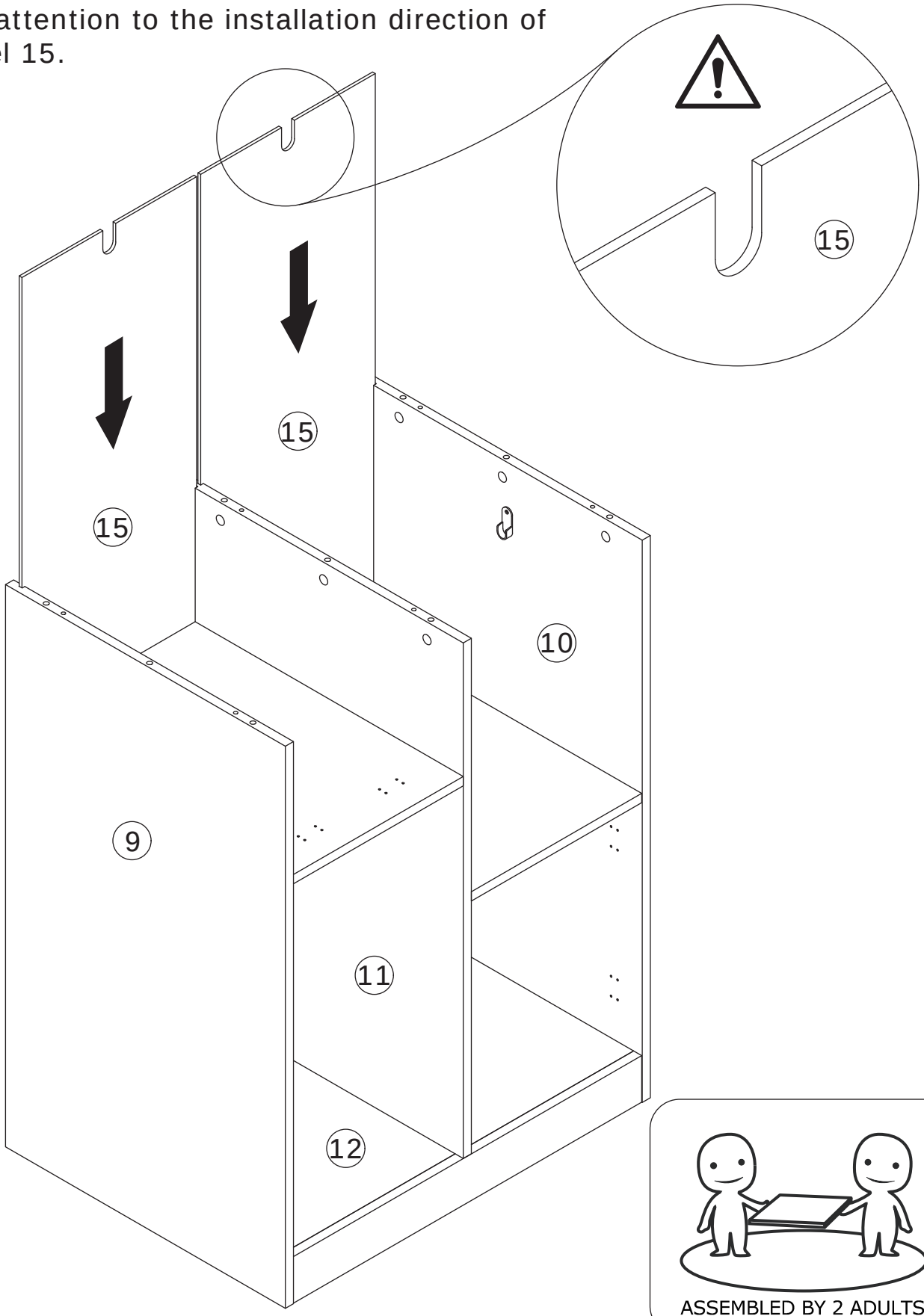

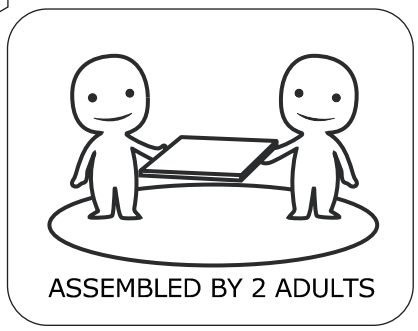

14

D x 6

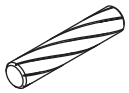

∅6 x 30 mm

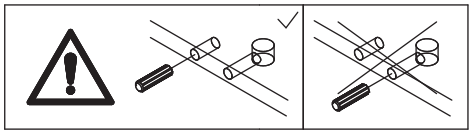

Insert wooden dowel (D) to panel 9, 10, and 11.

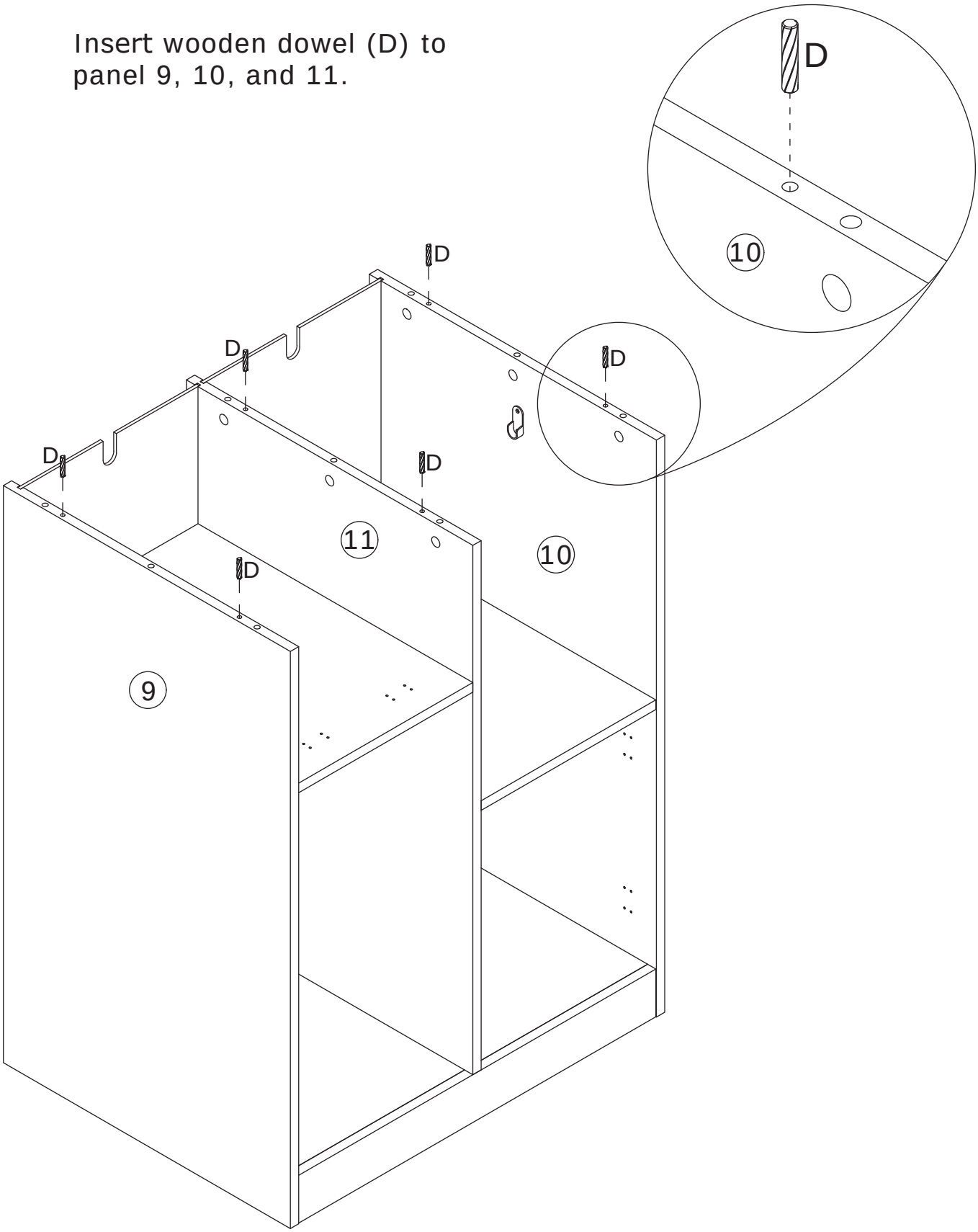

15

B x 9	C x 9	
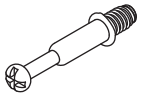 ∅6 x 35 mm		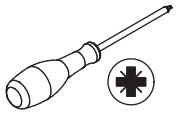

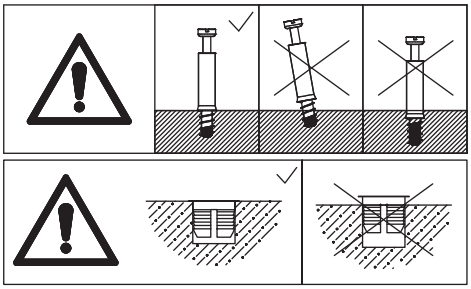

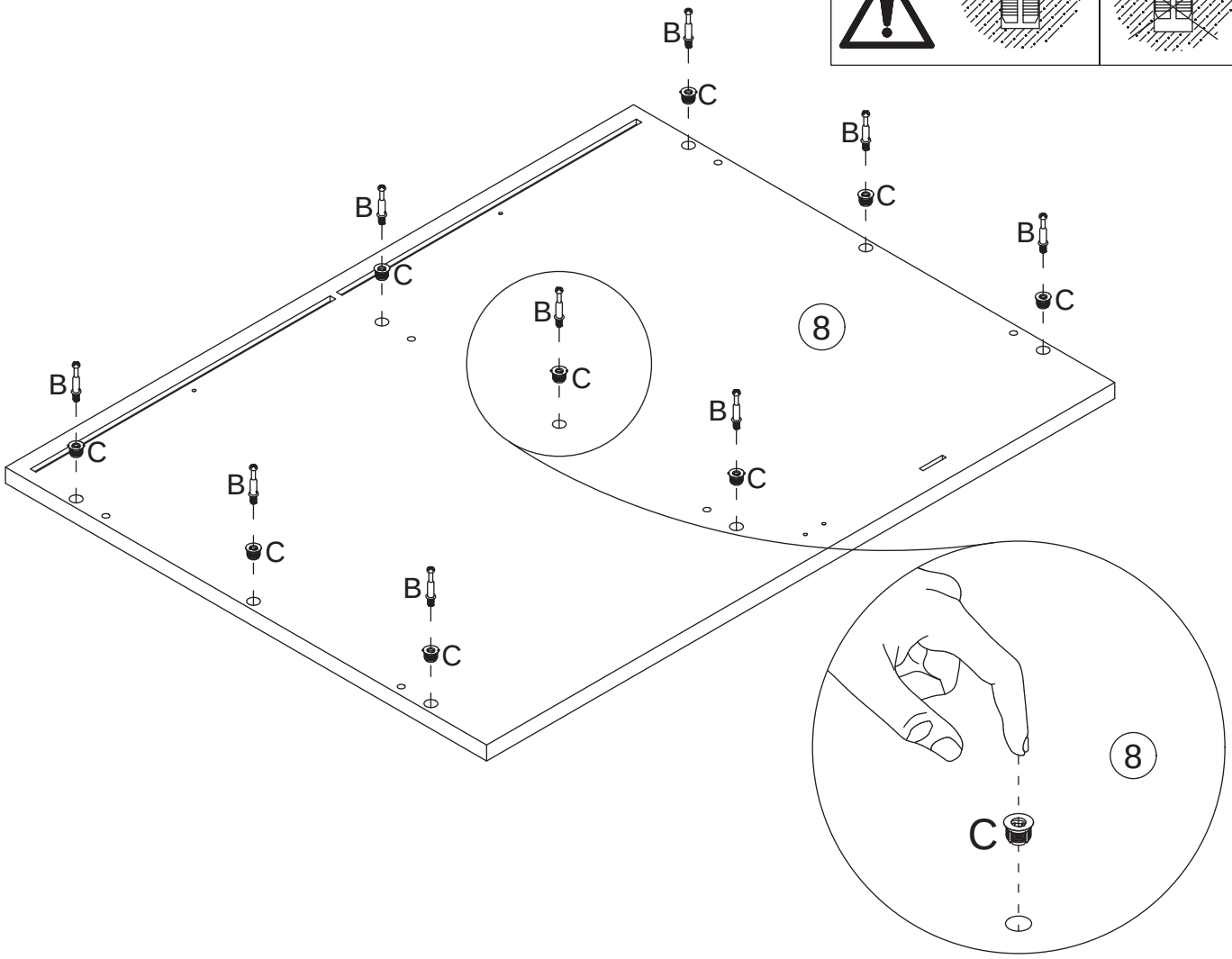

Install plug (C) onto panel 8, then screw self-tapping rod (B) into panel 8.

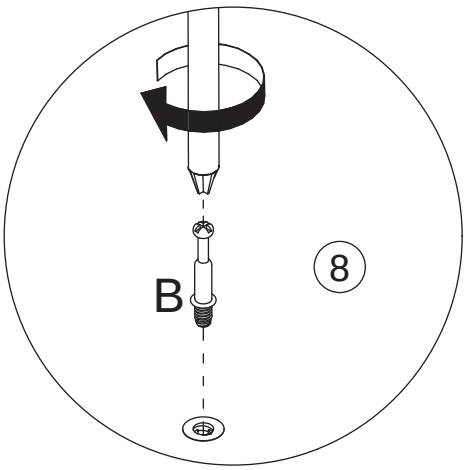

16

G x 2	N x 2	S x 2	T x 1	
∅3.5 x 14 mm		∅3 x 14 mm		

	G	S
	∅3.5 x 14 mm	∅3 x 14 mm

Secure part (T) to panel 8 using screw (S).
Secure bracket (N) to panel 8 using screw (G).

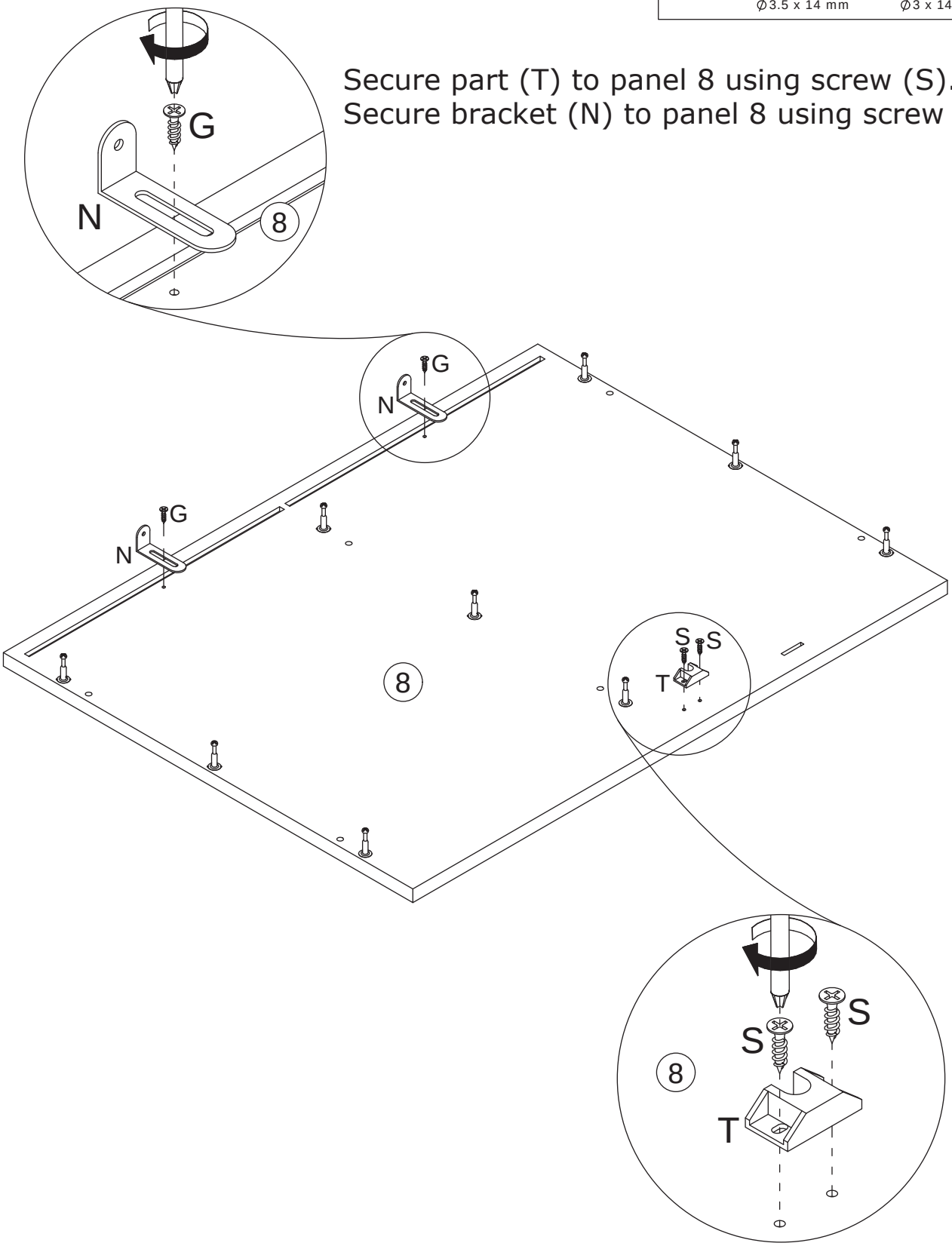

17

A x 9

∅15 x 10 mm

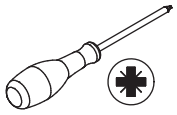

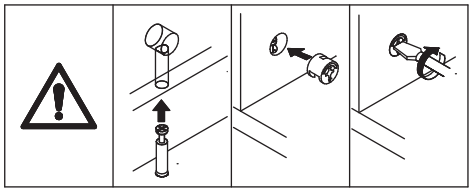

Connect panel 8 to panel 9, 10, and 11, then tighten by turning cam lock (A) clockwise.

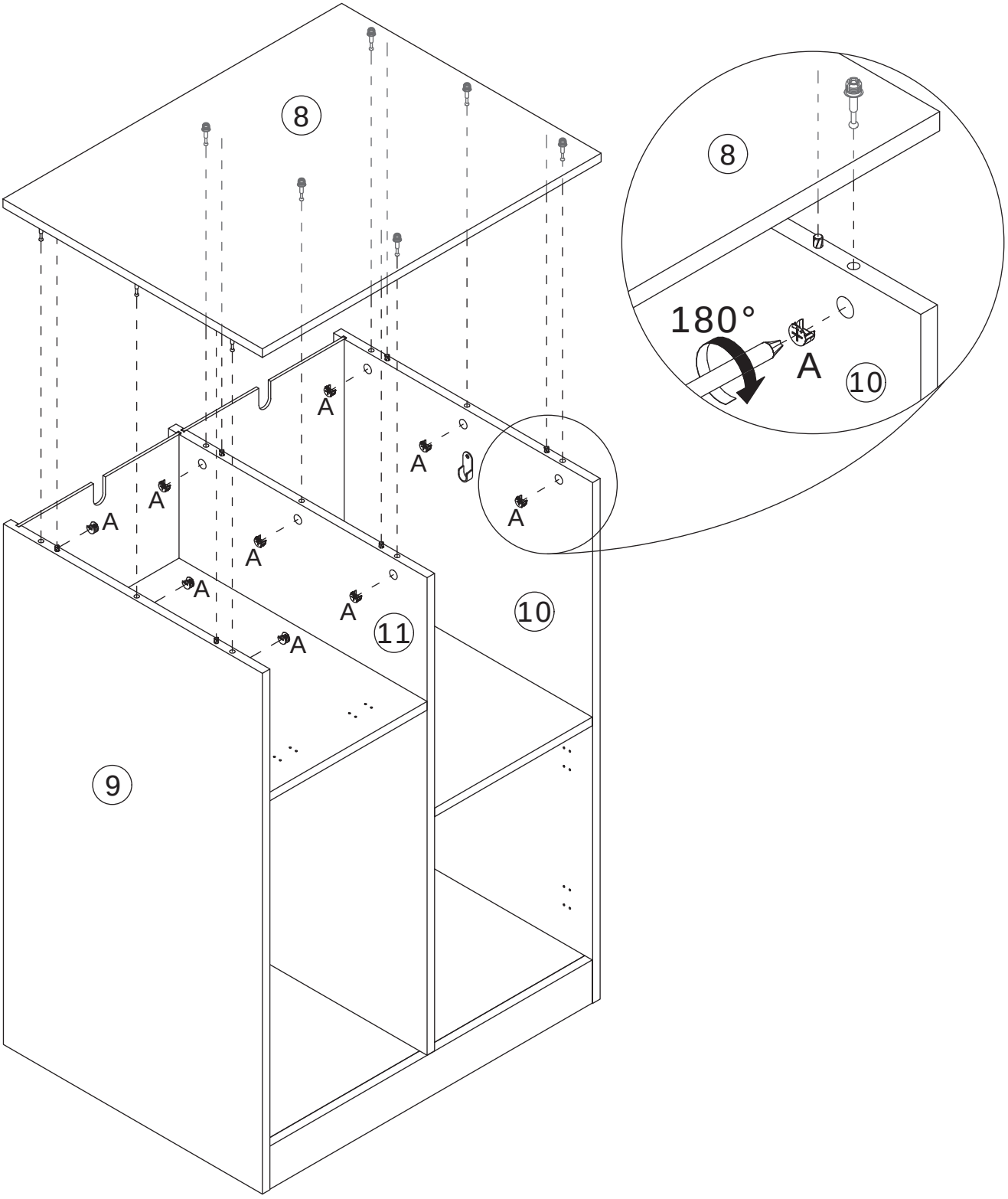

18

F x 4	G x 8	
	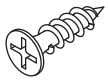 ∅3.5 x 14 mm	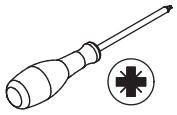

G	S
∅3.5 x 14 mm	∅3 x 14 mm

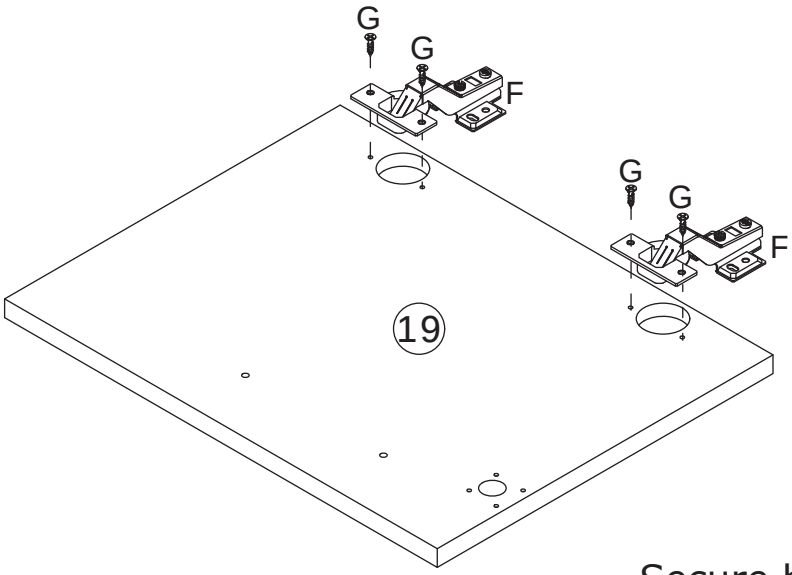

Secure hinge (F) to panels 19 and 18 using screw (G).

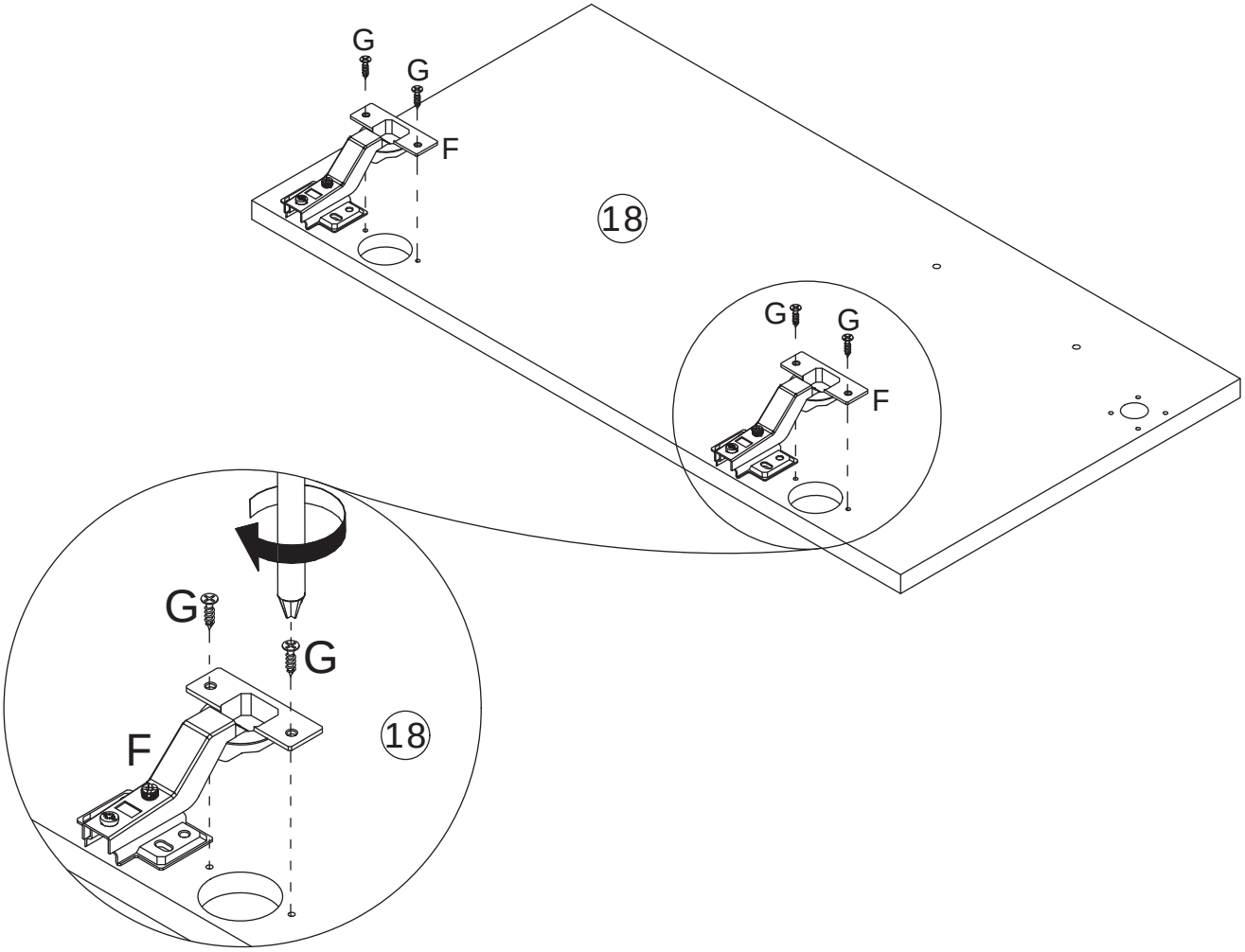

19

G x 16

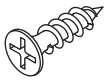

∅3.5 x 14 mm

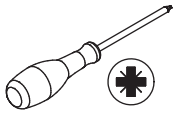

G

∅3.5 x 14 mm

S

∅3 x 14 mm

Attach panels 18 and 19 to panels 9 and 10 via hinges using screw (G).

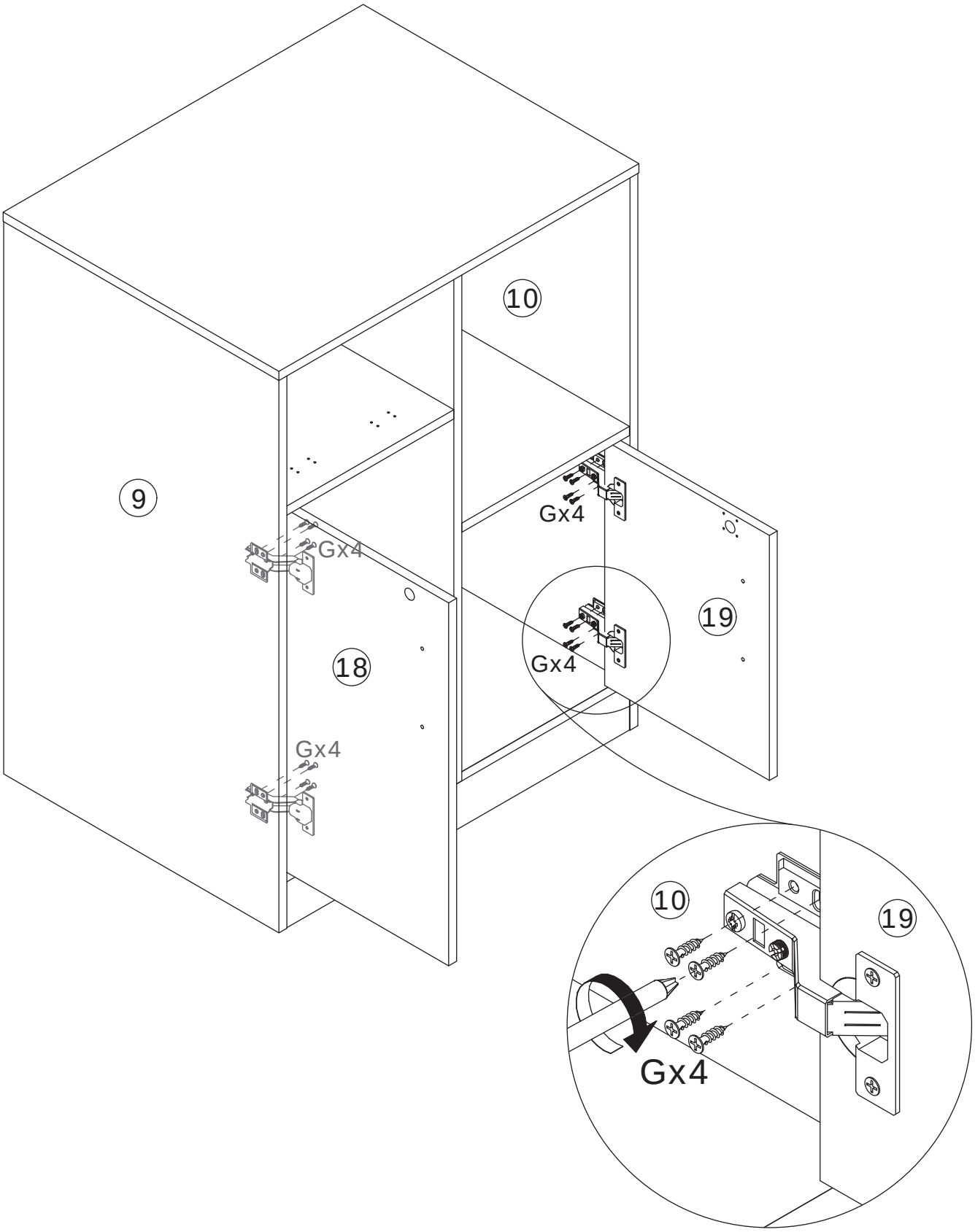

20

H x 2	J x 4	
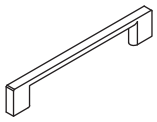	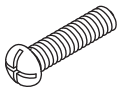 ∅4 x 18 mm	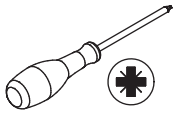

Secure handle (H) to panels 18 and 19 using screw (J).

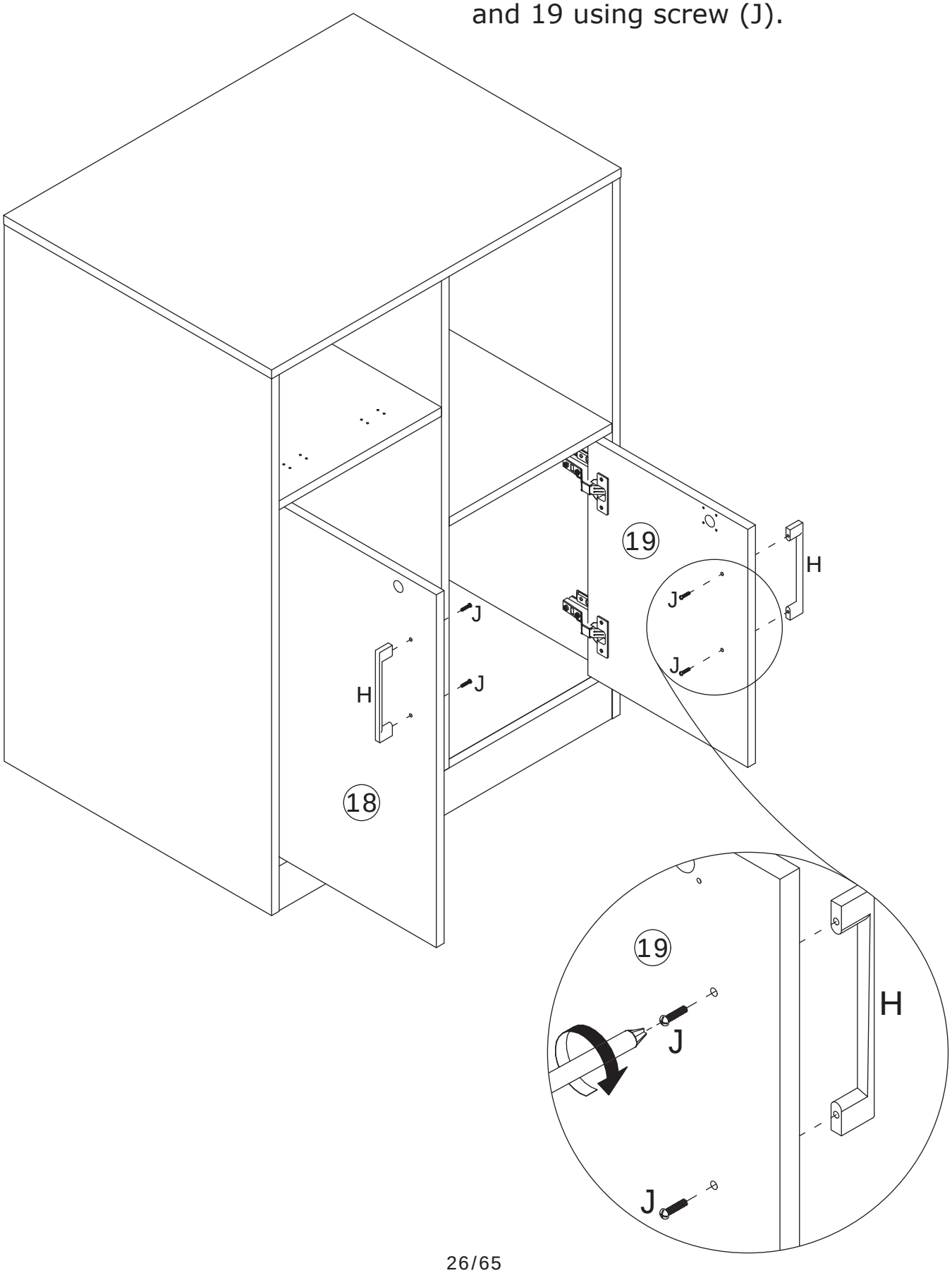

21

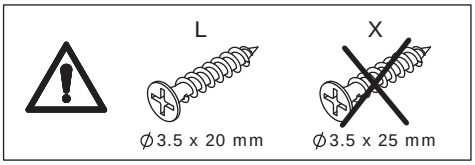

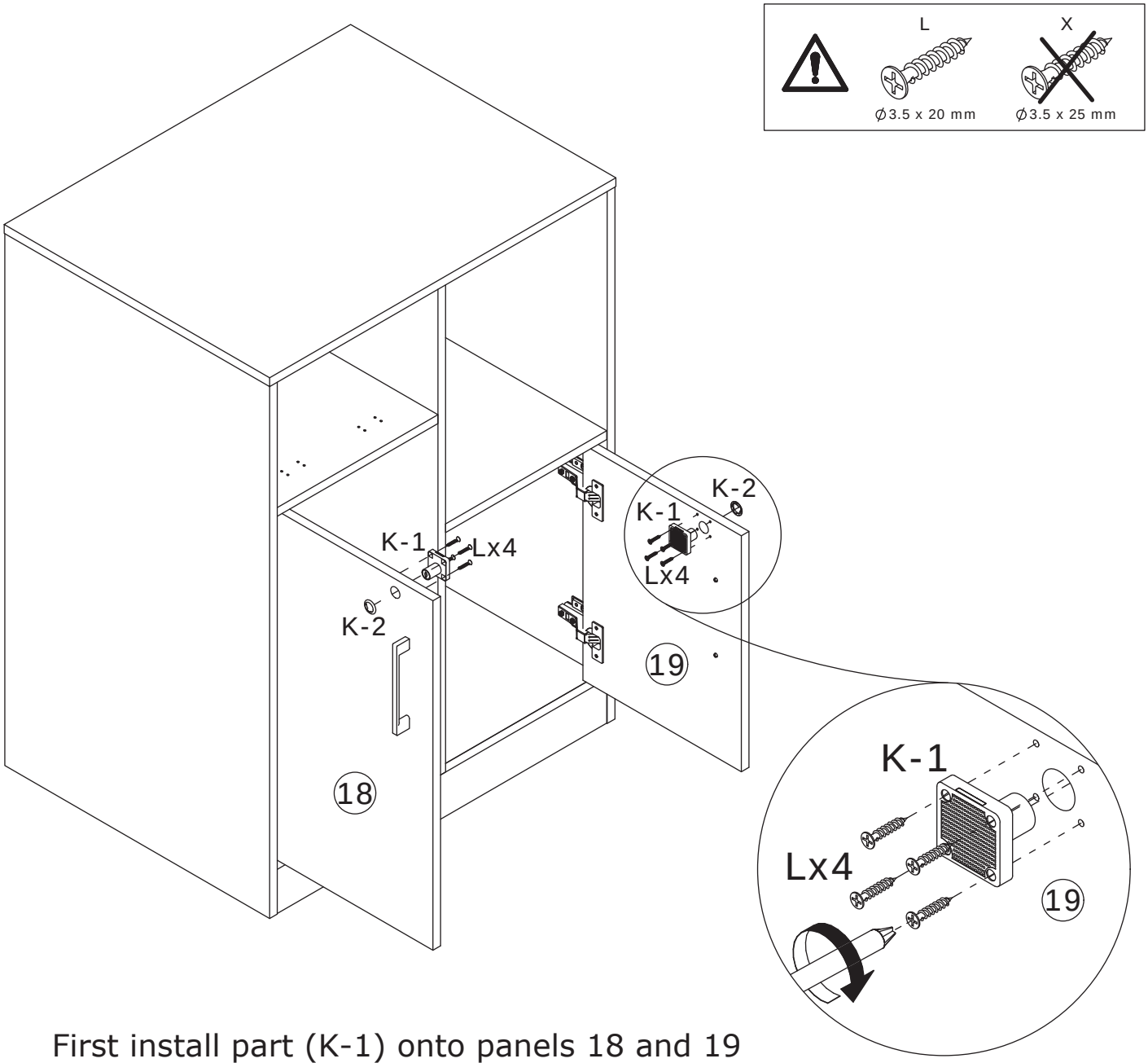

First install part (K-1) onto panels 18 and 19 using screw (L).
Then install part (K-2) onto part (K-1).

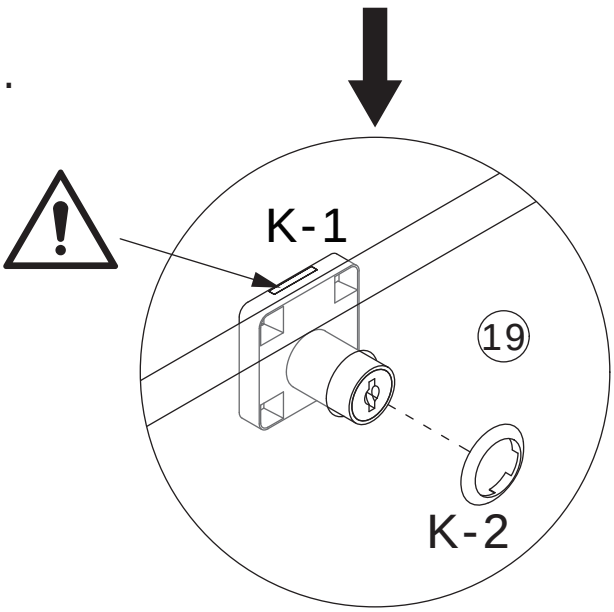

22

K x 1
K-3

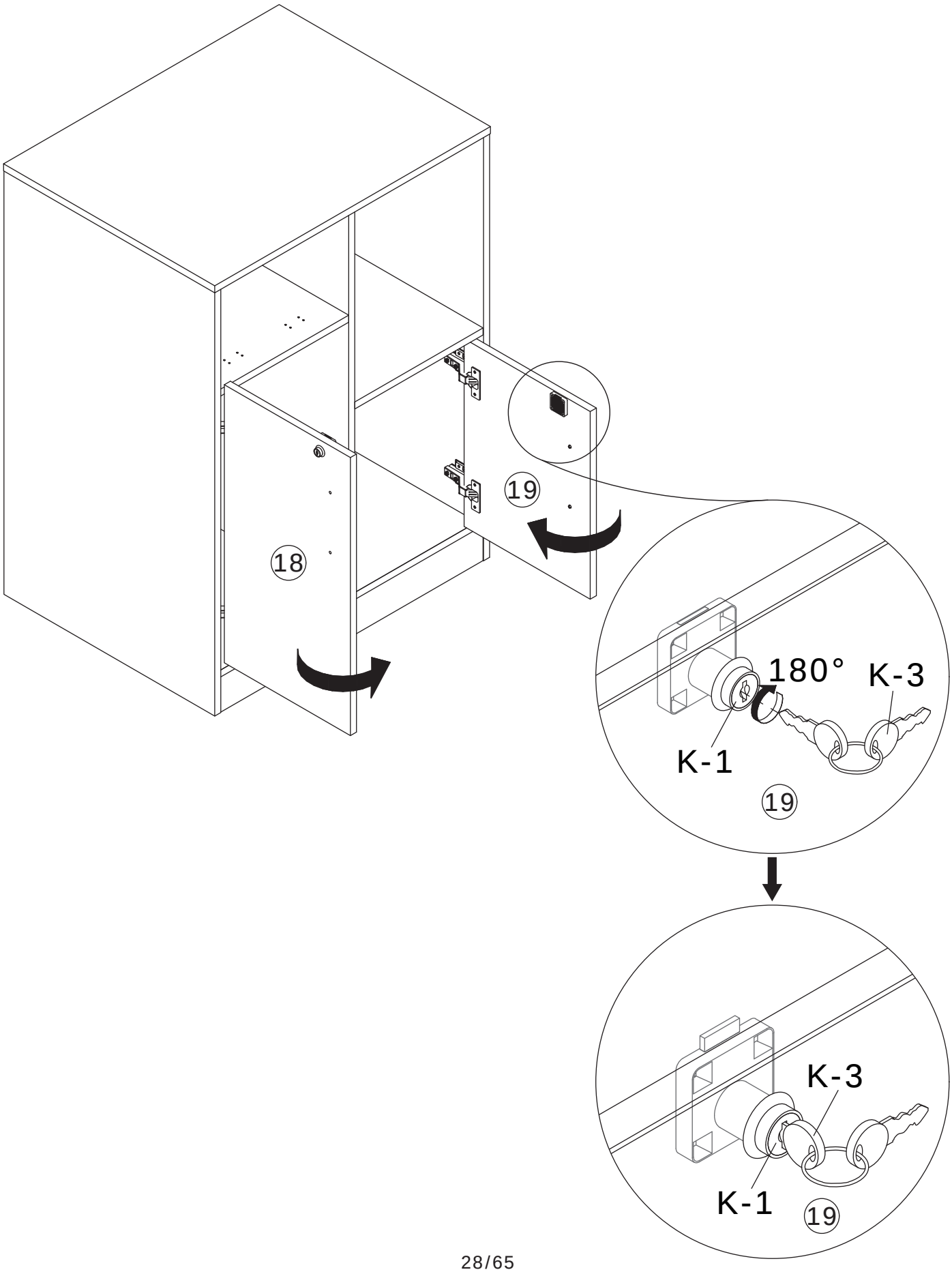

23

F x 2	G x 4	
	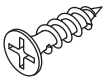 ∅3.5 x 14 mm	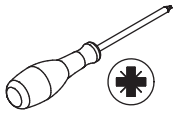

	G	S
	∅3.5 x 14 mm	∅3 x 14 mm

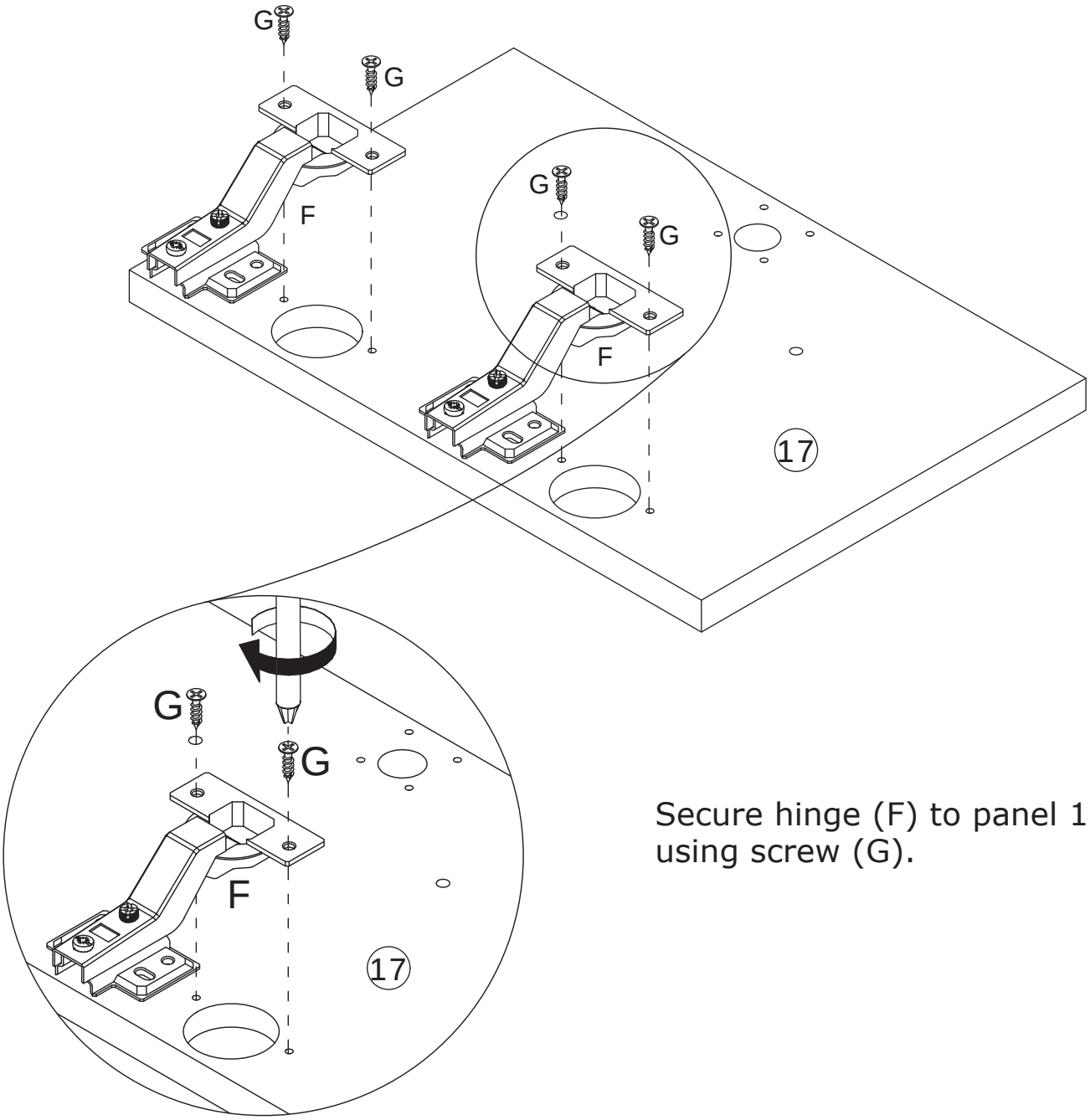

Secure hinge (F) to panel 17 using screw (G).

24

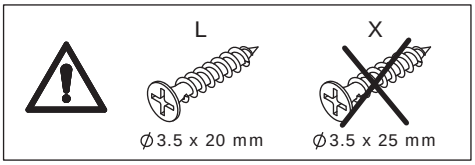

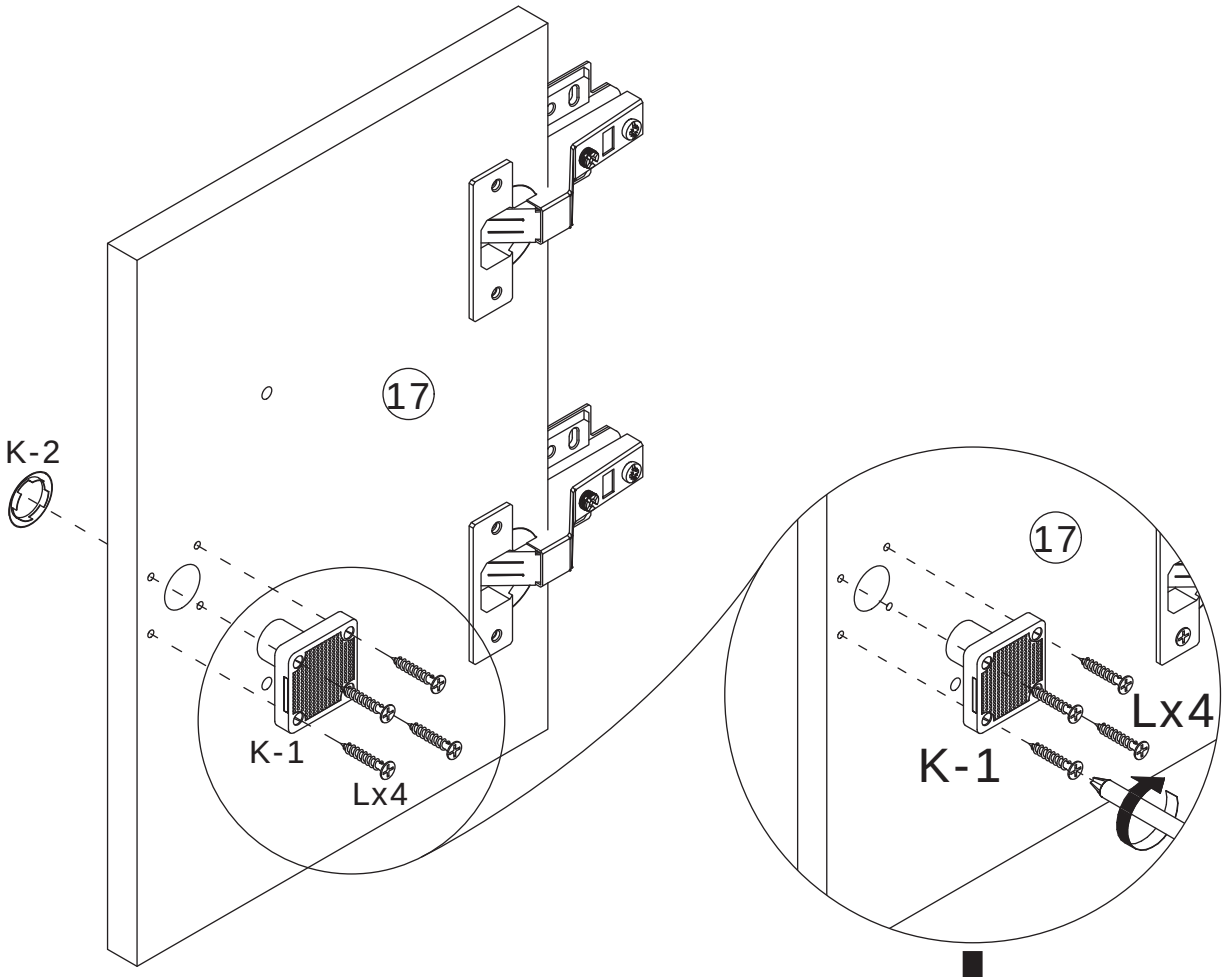

First install part (K-1) onto panel 17
using screw (L).
Then install part (K-2) onto part (K-1).

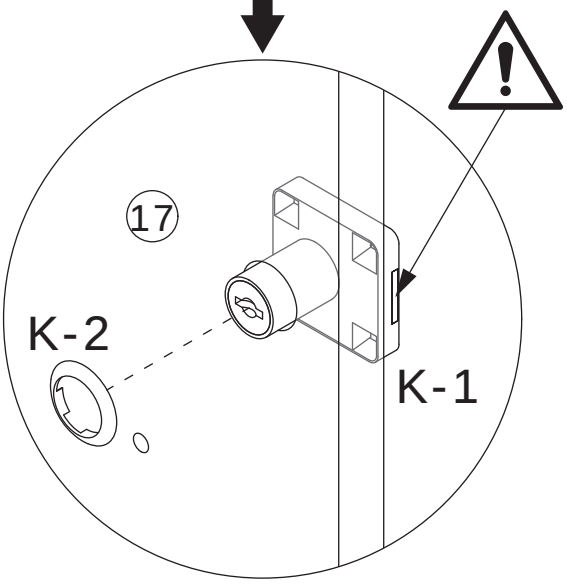

25

H x 1	J x 2	
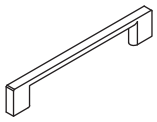	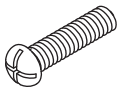 ∅4 x 18 mm	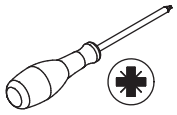

Secure handle (H) to panel 17 using screw (J).

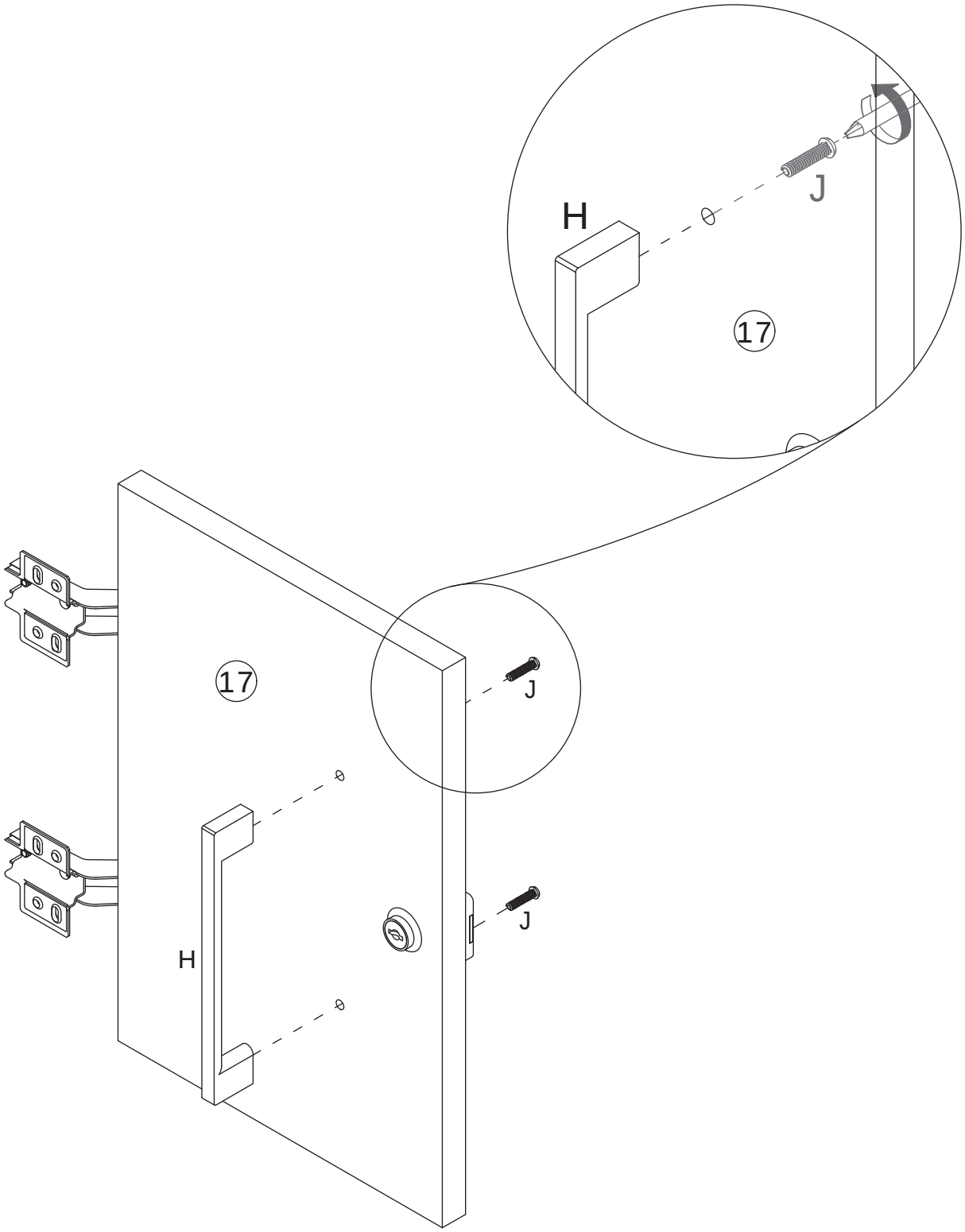

26

G x 8

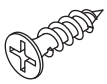

∅3.5 x 14 mm

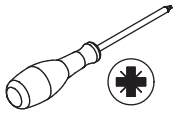

G

∅3.5 x 14 mm

S

∅3 x 14 mm

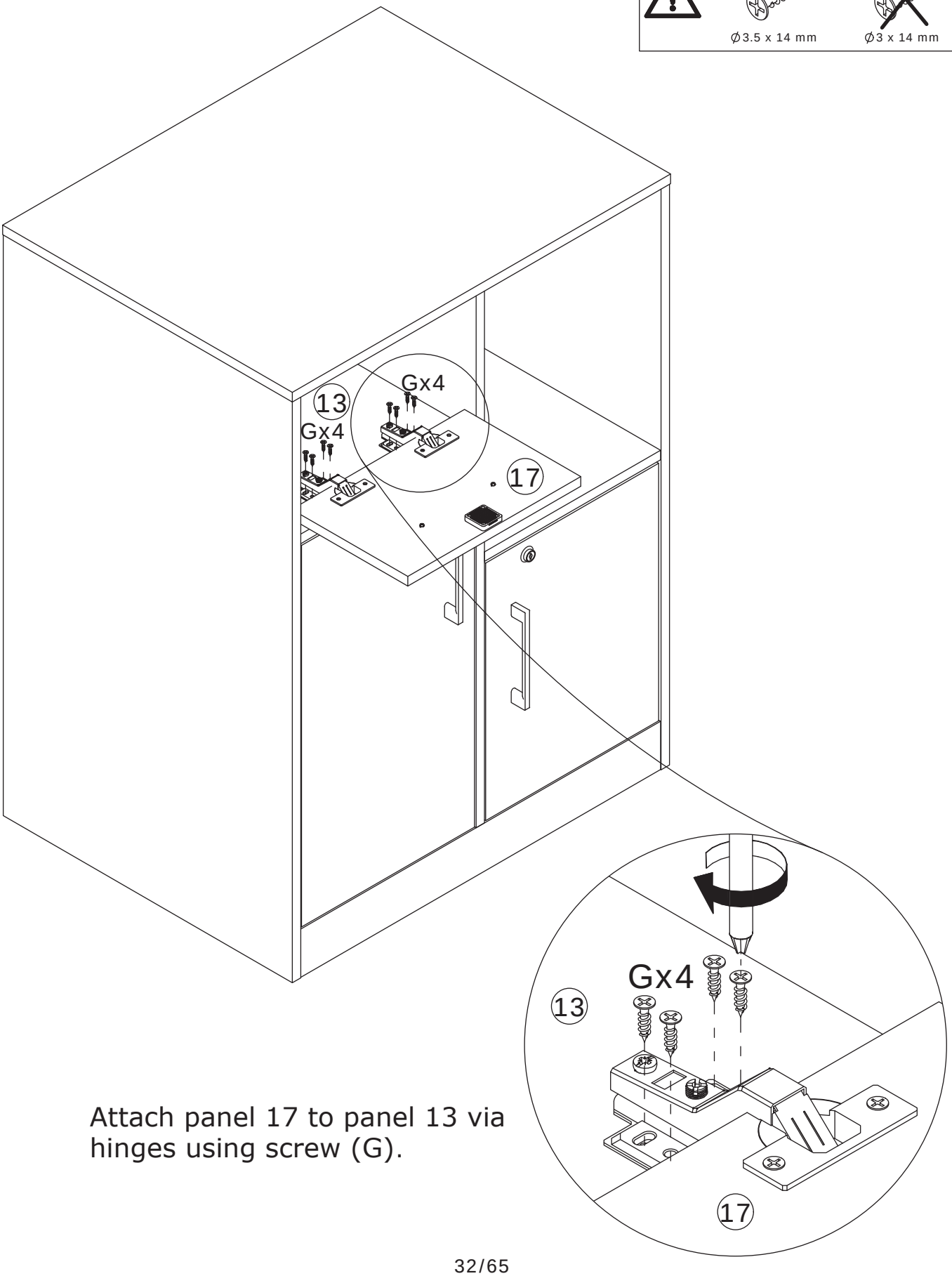

Attach panel 17 to panel 13 via hinges using screw (G).

27

K x 1
K-3

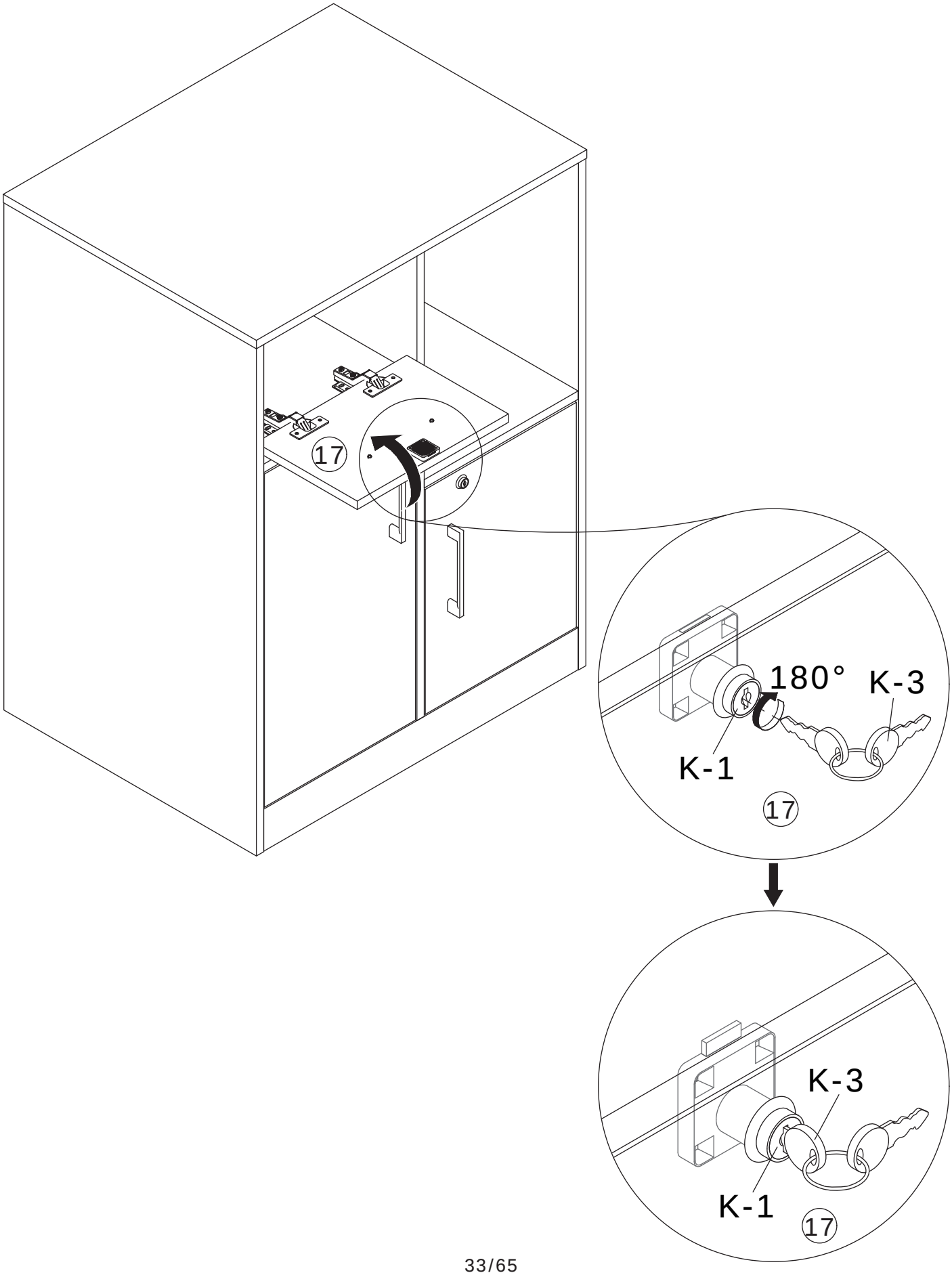

28

R x 10	S x 10	
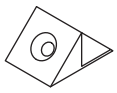	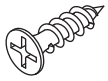 ∅3 x 14 mm	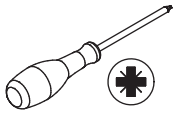

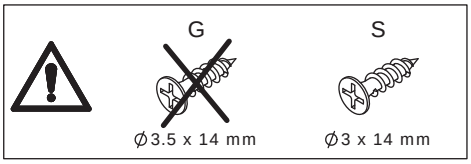

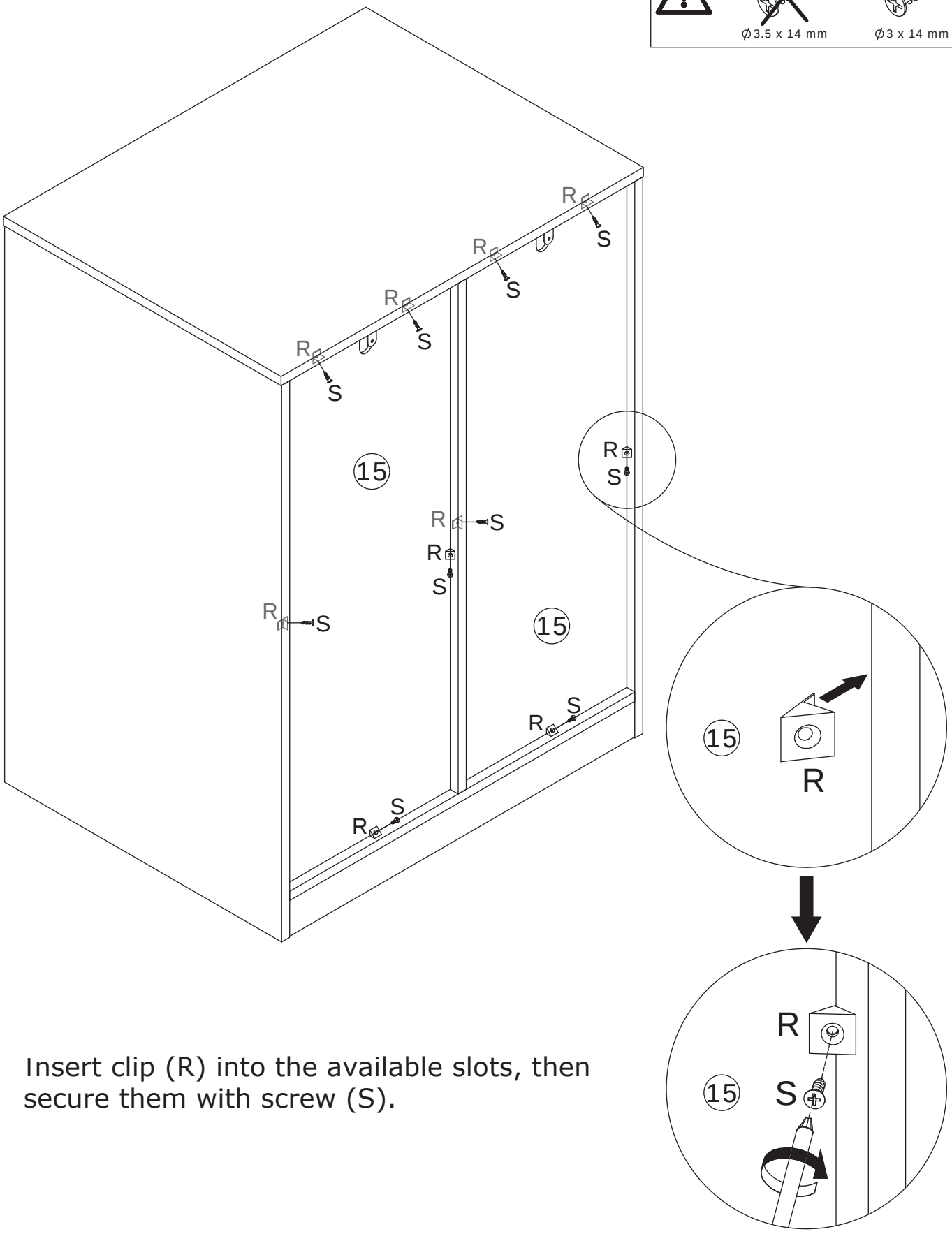

Insert clip (R) into the available slots, then secure them with screw (S).

29

G x 16	M x 4	
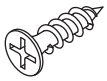 ∅3.5 x 14 mm	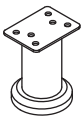	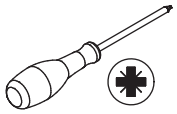

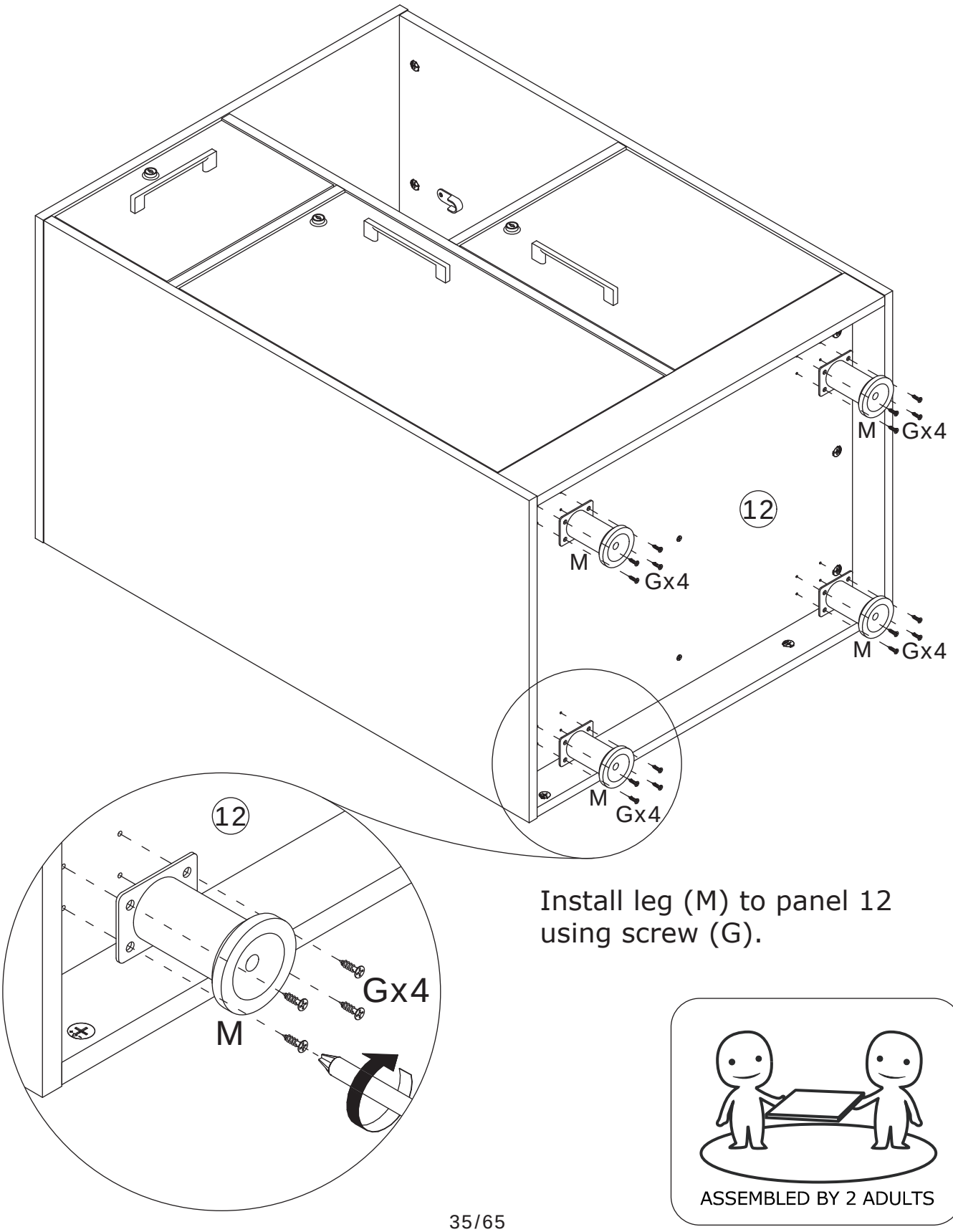

Install leg (M) to panel 12 using screw (G).

ASSEMBLED BY 2 ADULTS

30

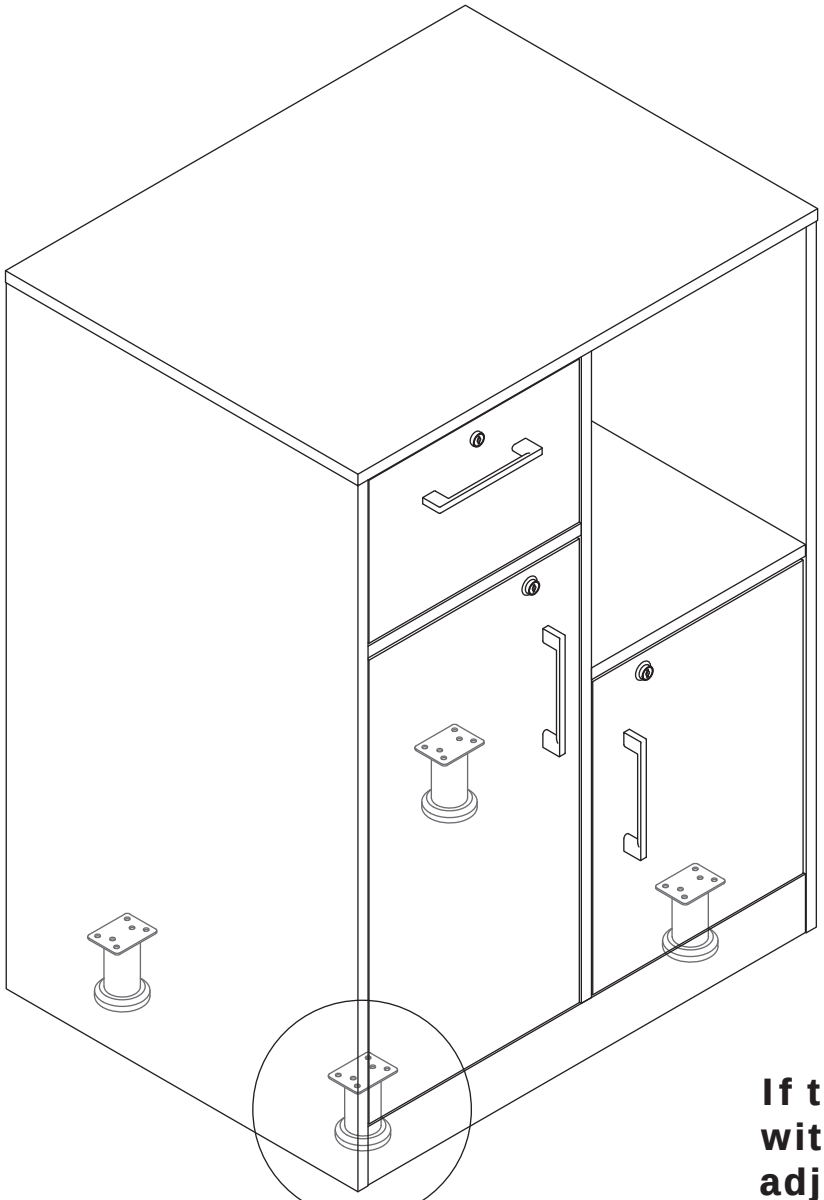

If the cabinet is not level with the ground, adjust the adjustable leg (M).

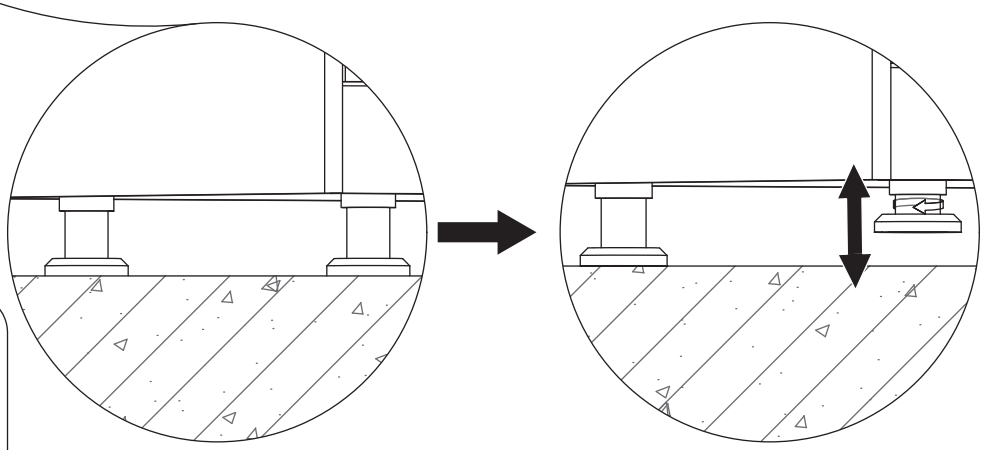

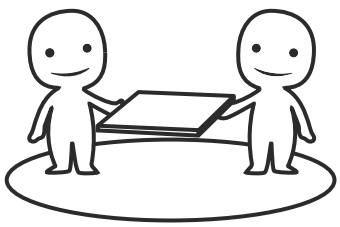

ASSEMBLED BY 2 ADULTS

Choose the appropriate installation method based on the material of your wall.

- **If it is a solid wall, please select Option A.**
- **If it is not a solid wall, please select Option B.**

Option A

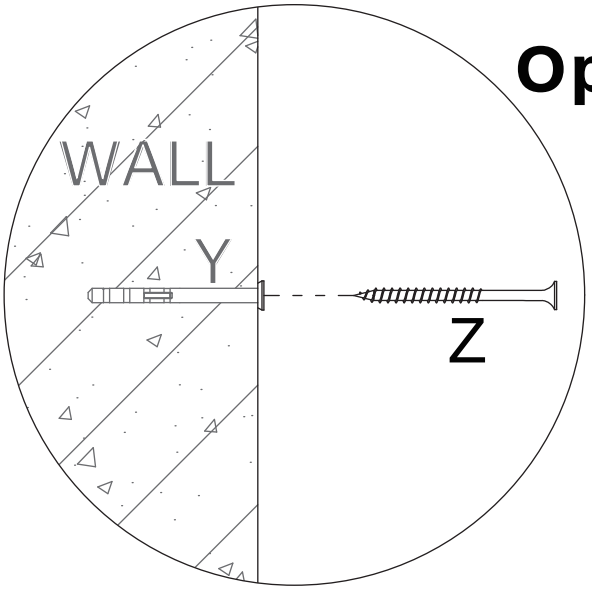

OR

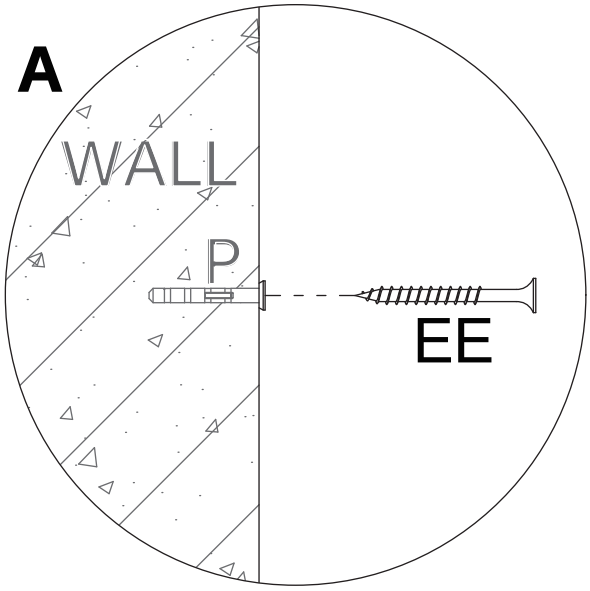

Option B

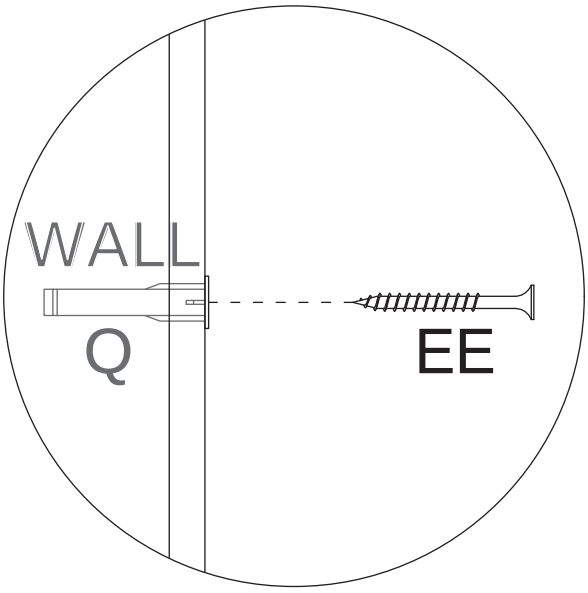

31

P x 2	EE x 2	
∅8 x 38 mm	∅4 x 68 mm	

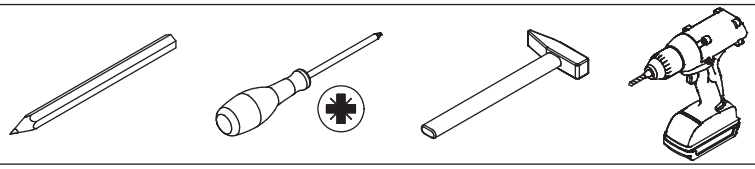

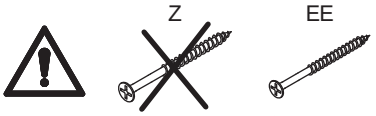

Option A

Install anti-tipping device.

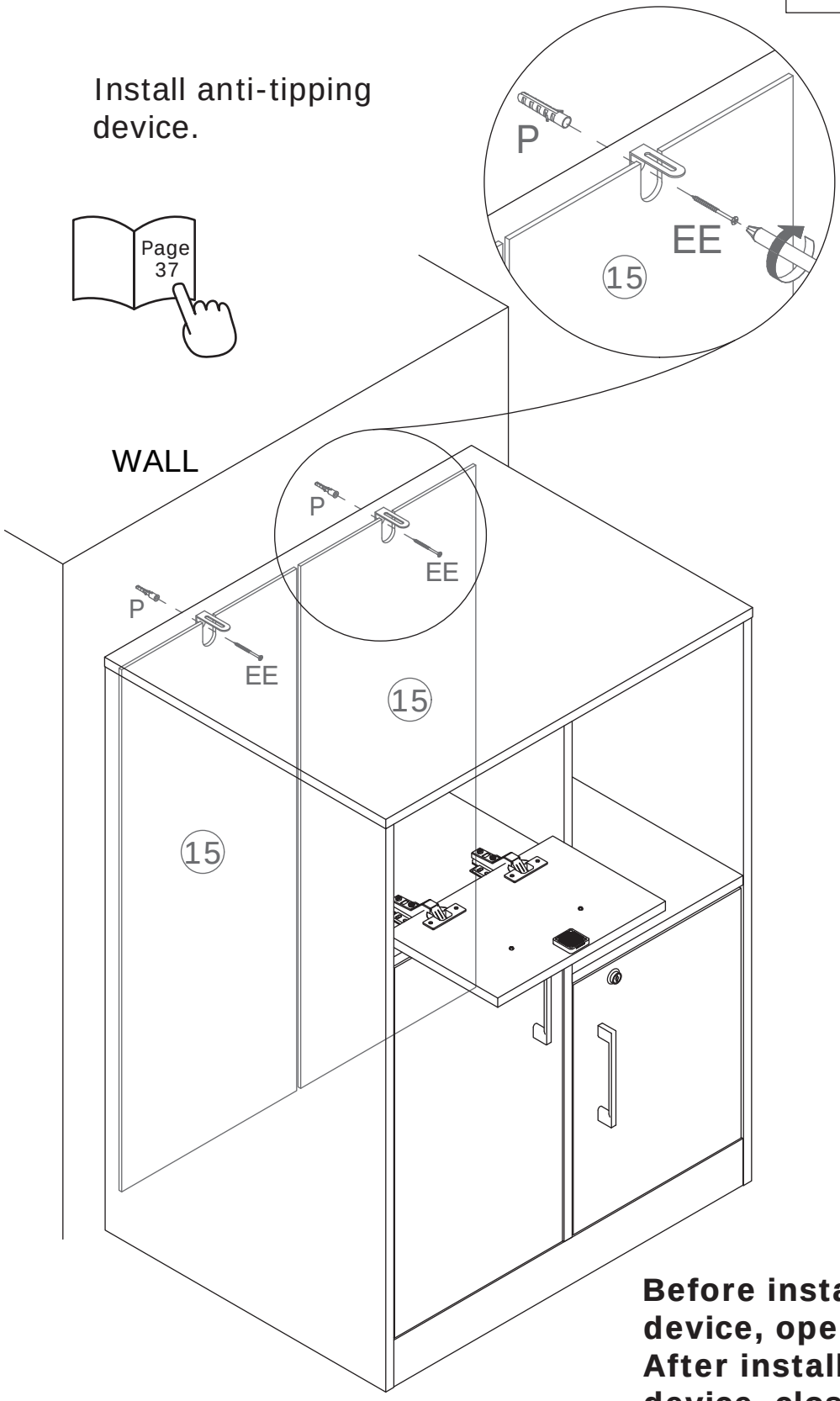

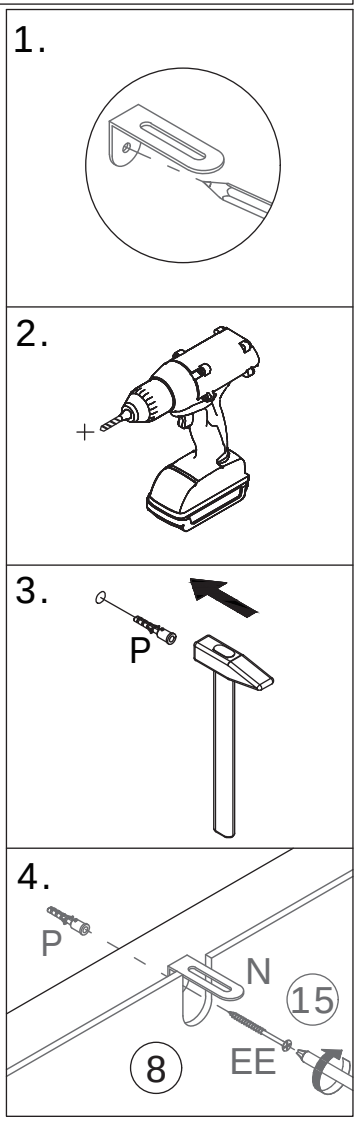

Before installing the anti-tip device, open door panel 17; After installing the anti-tip device, close and lock door panel 17.

32

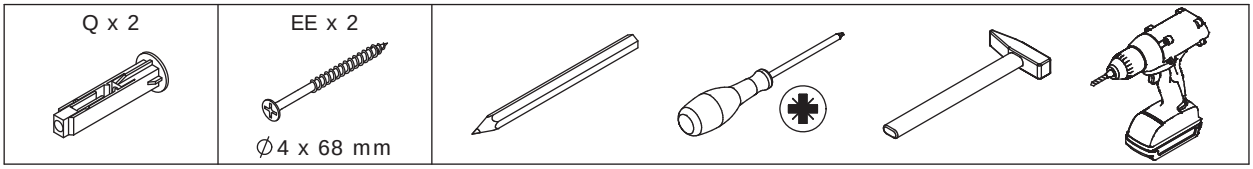

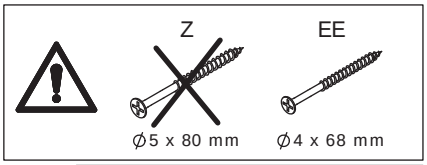

Option B

Install anti-tipping device.

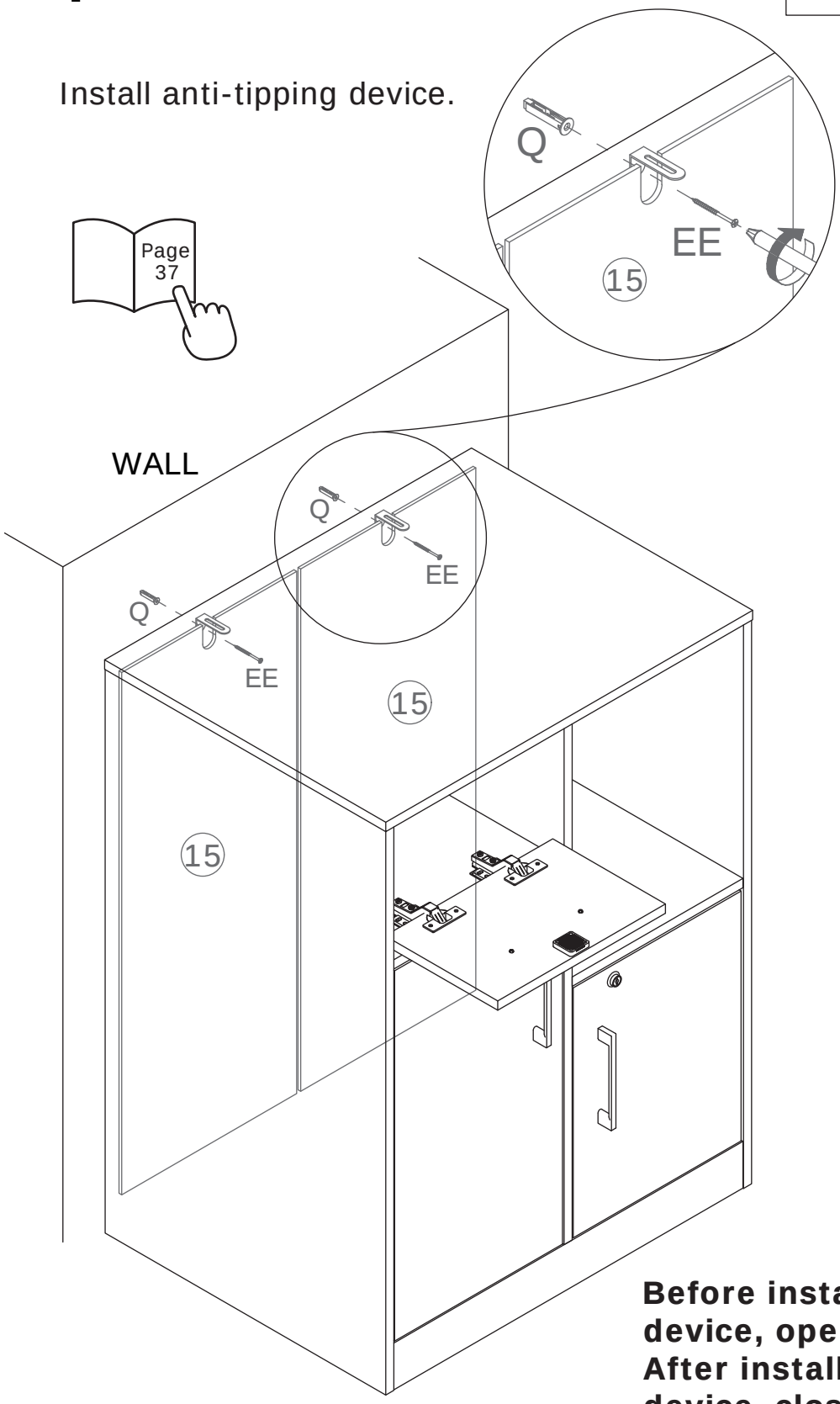

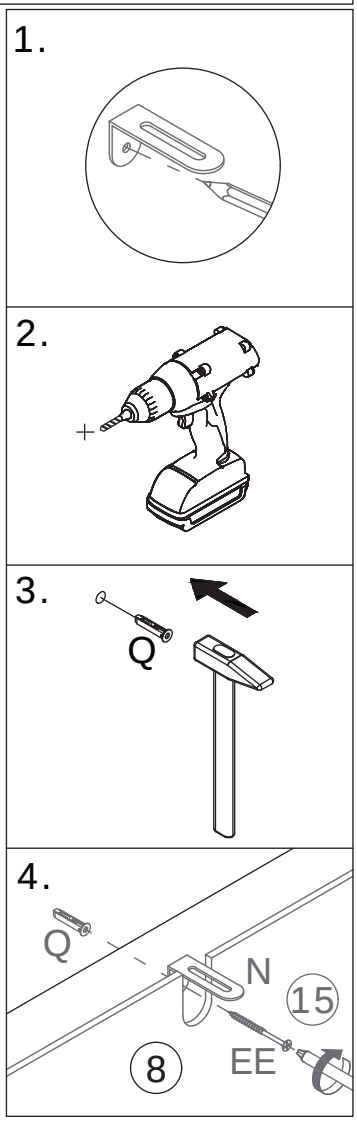

Before installing the anti-tip device, open door panel 17; After installing the anti-tip device, close and lock door panel 17.

33

B x 4	C x 4	S x 2	T x 1	
∅6 x 35 mm		∅3 x 14 mm		

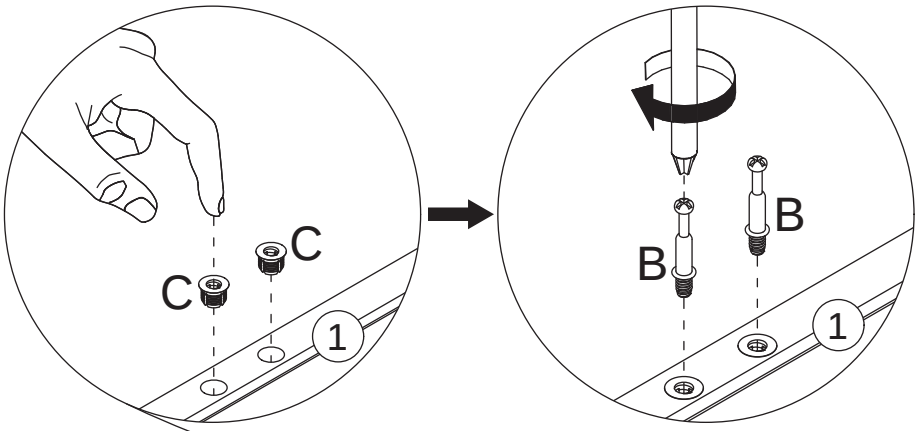

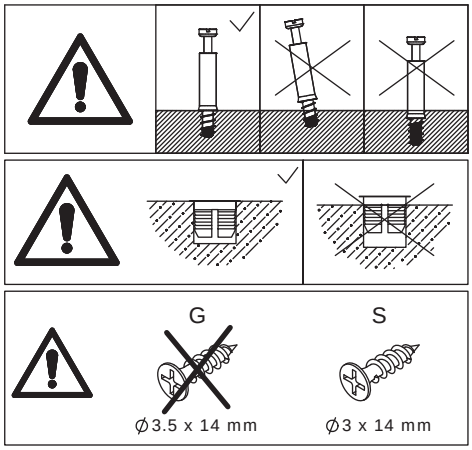

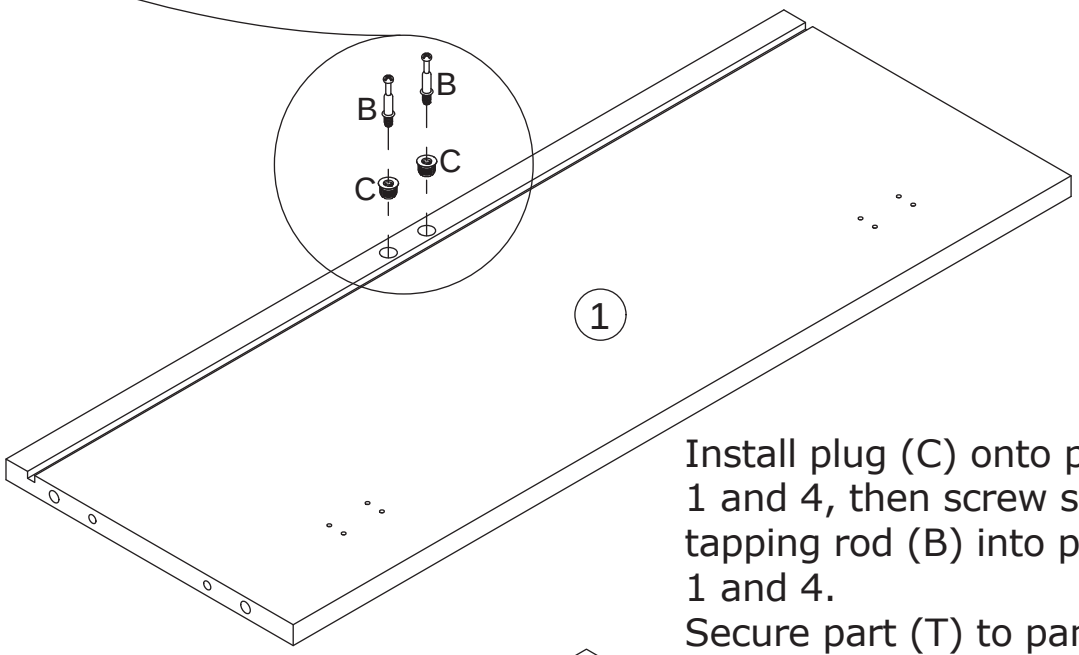

Install plug (C) onto panels 1 and 4, then screw self-tapping rod (B) into panels 1 and 4.
Secure part (T) to panel 4 using screw (S).

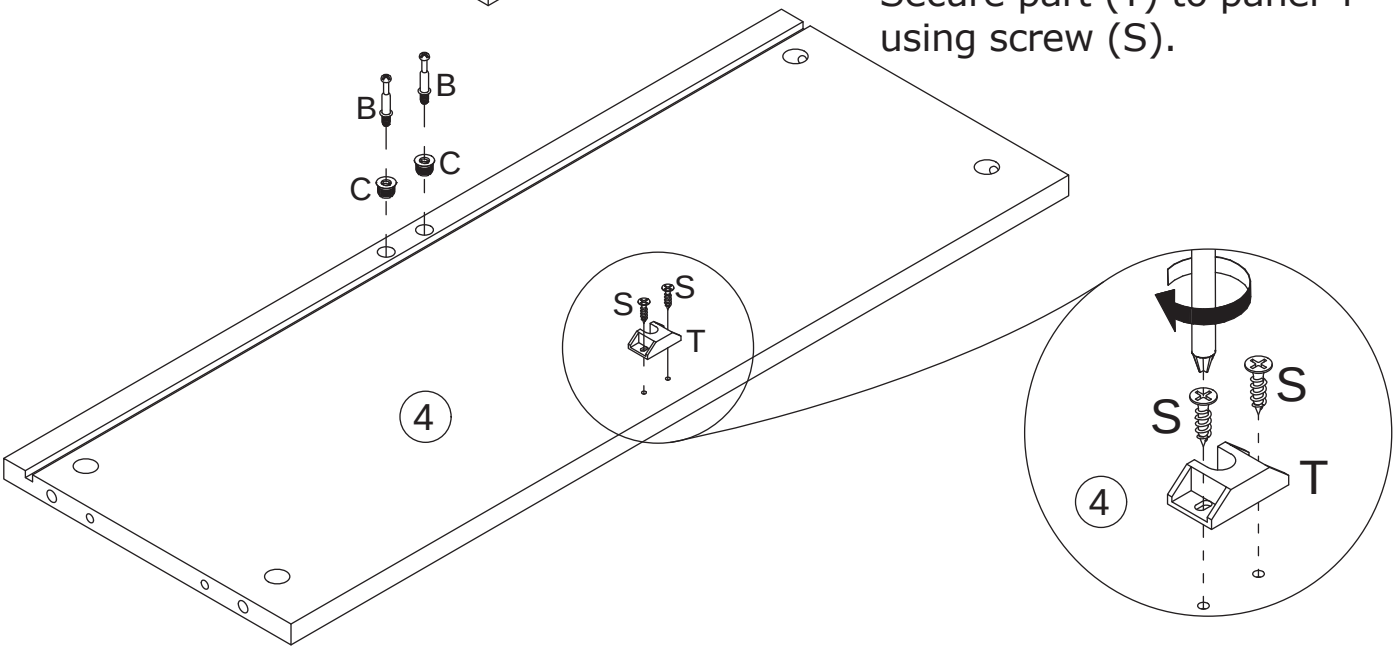

34

A x 4

∅15 x 10 mm

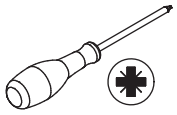

Connect panels 1 and 4 to panel 6, then tighten by turning cam lock (A) clockwise.

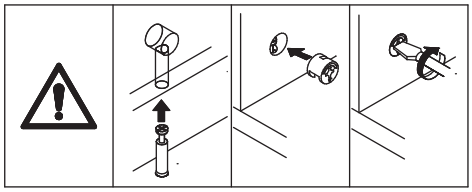

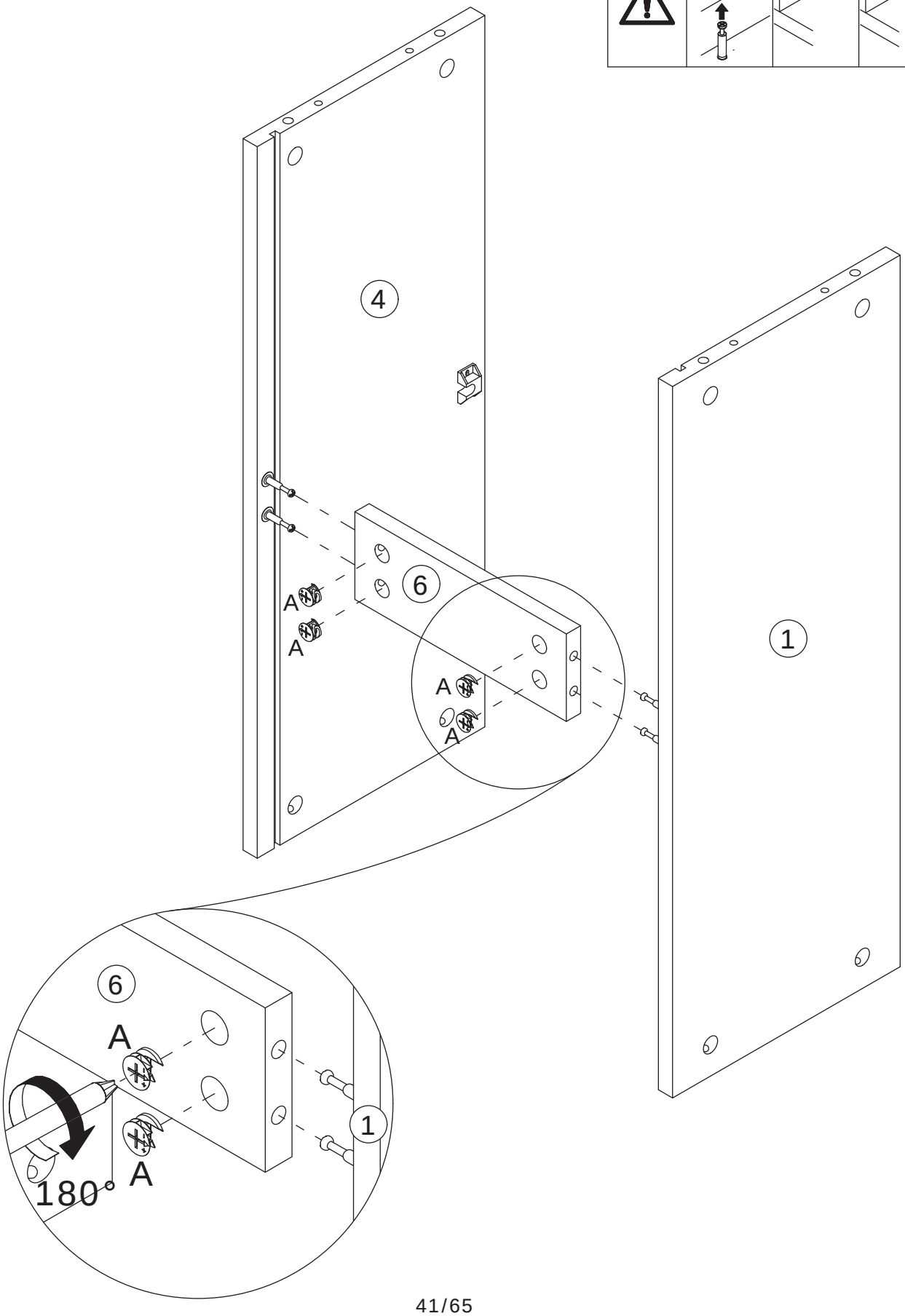

35

B x 8	C x 8	
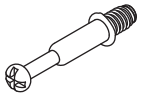 ∅6 x 35 mm		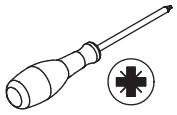

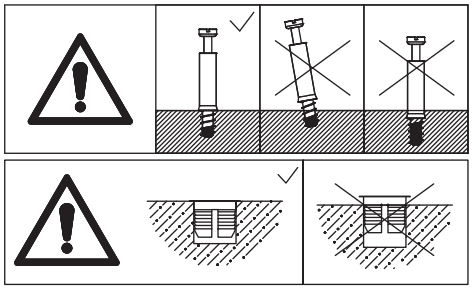

Install plug (C) onto panels 2 and 3, then screw self-tapping rod (B) into panels 2 and 3.

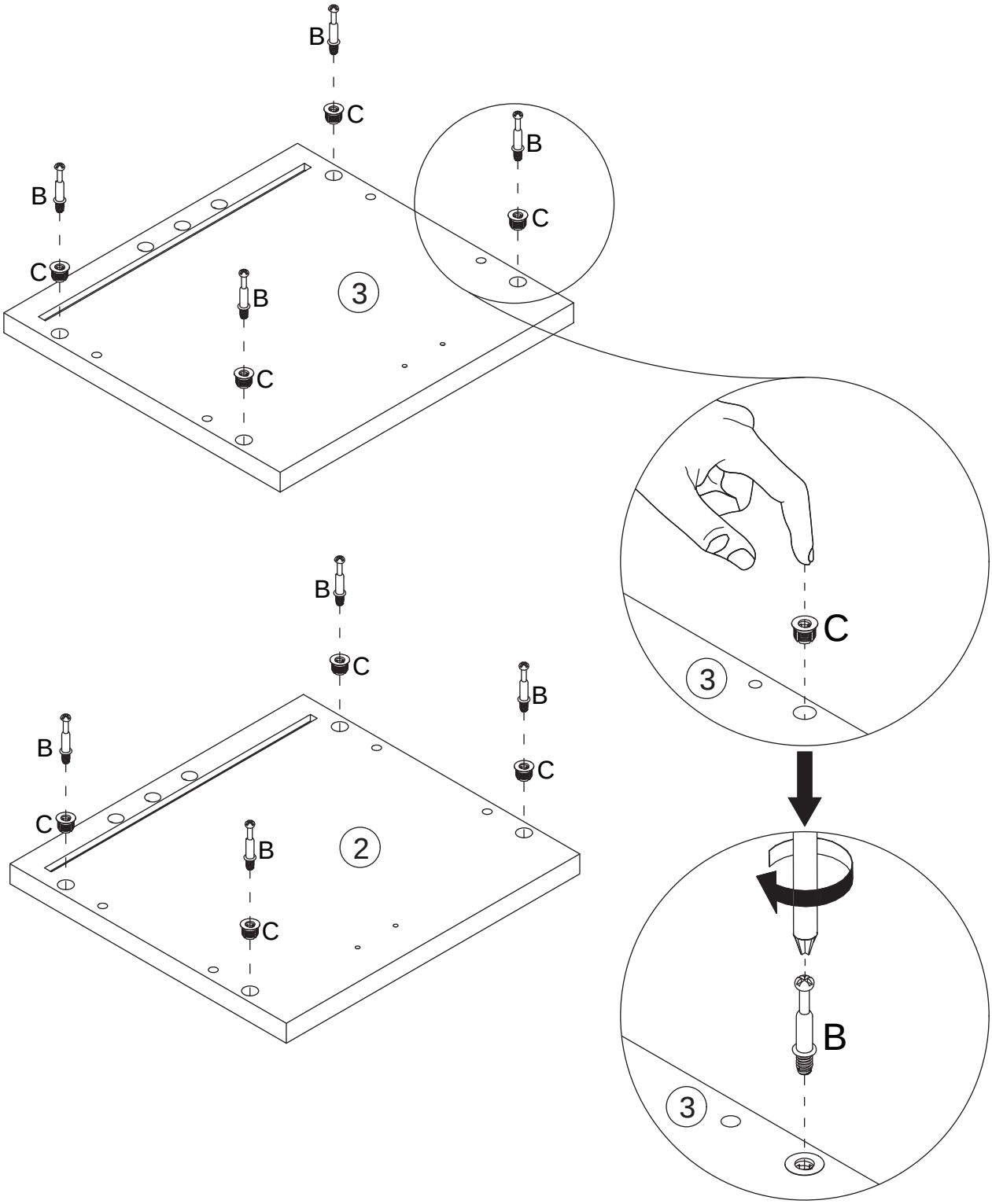

36

A x 4	D x 4	
	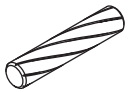	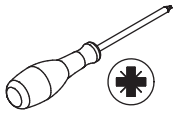
∅15 x 10 mm	∅6 x 30 mm	

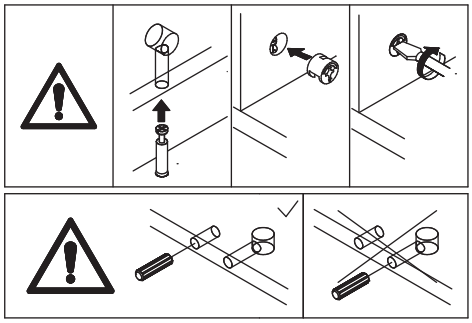

Connect panel 3 to panels 1 and 4 using wooden dowel (D), then tighten by turning cam lock (A) clockwise.

37

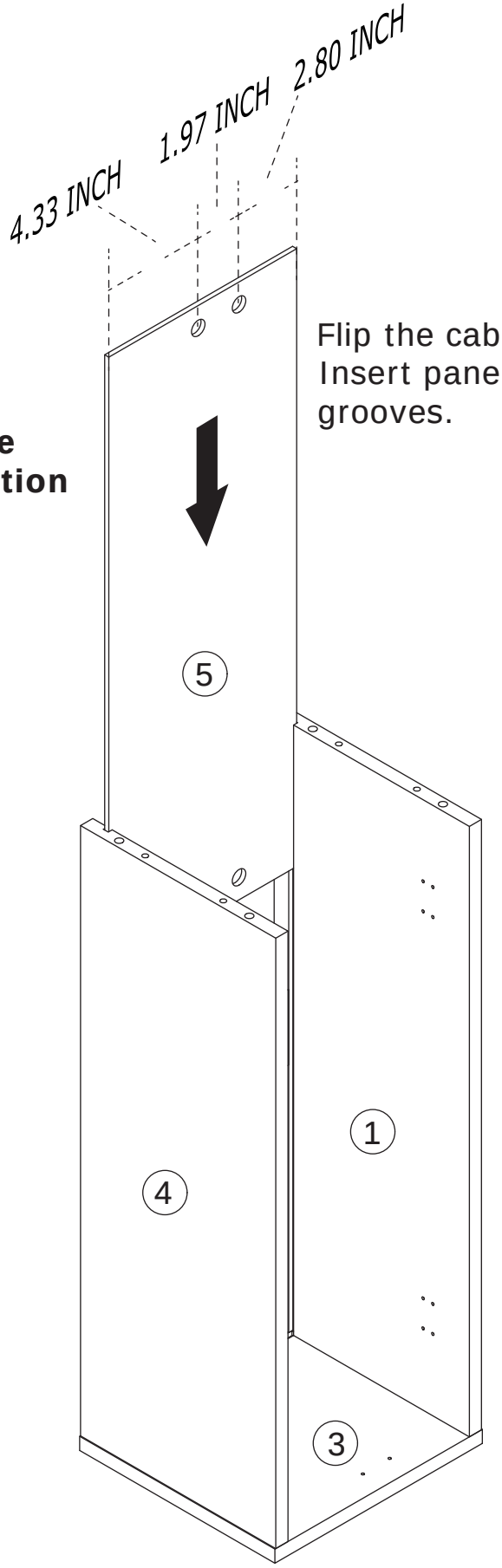

Flip the cabinet.
Insert panel 5 along the available grooves.

Pay attention to the installation orientation of panel 5.

38

A x 4	D x 4	
	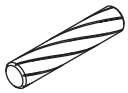	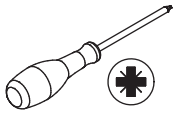
∅15 x 10 mm	∅6 x 30 mm	

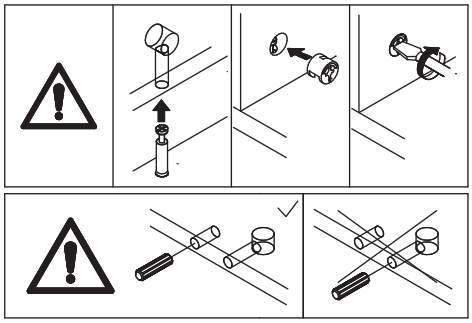

Connect panel 2 to panels 1 and 4 using wooden dowel (D), then tighten by turning cam lock (A) clockwise.

39

F x 2	G x 4	
	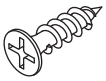 ∅3.5 x 14 mm	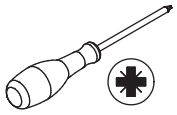

G	S
∅3.5 x 14 mm	∅3 x 14 mm

Secure hinge (F) to panel 7 using screw (G).

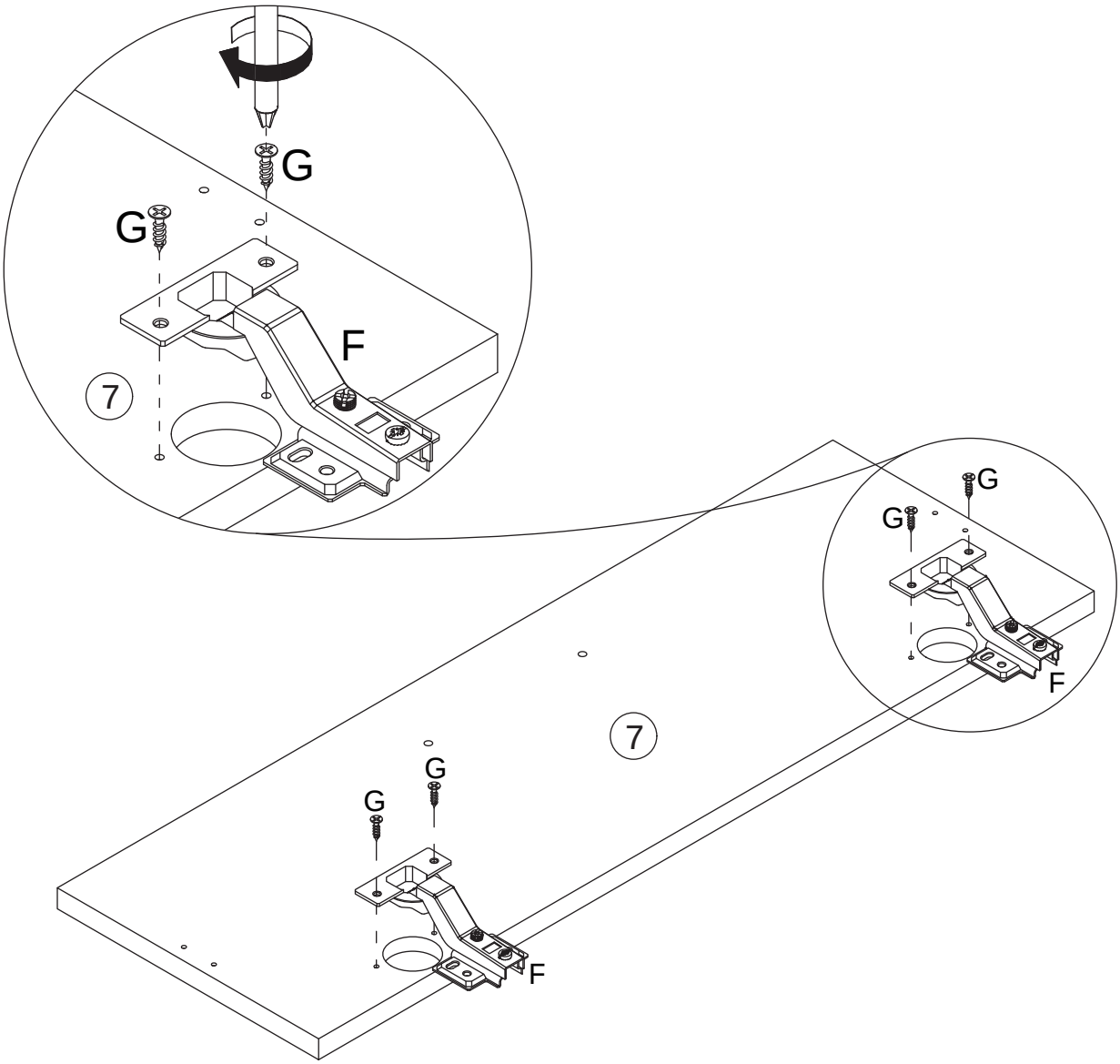

40

G x 8

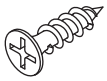

∅3.5 x 14 mm

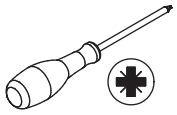

G

∅3.5 x 14 mm

S

∅3 x 14 mm

Attach panel 7 to panel 1 via hinges using screw (G).

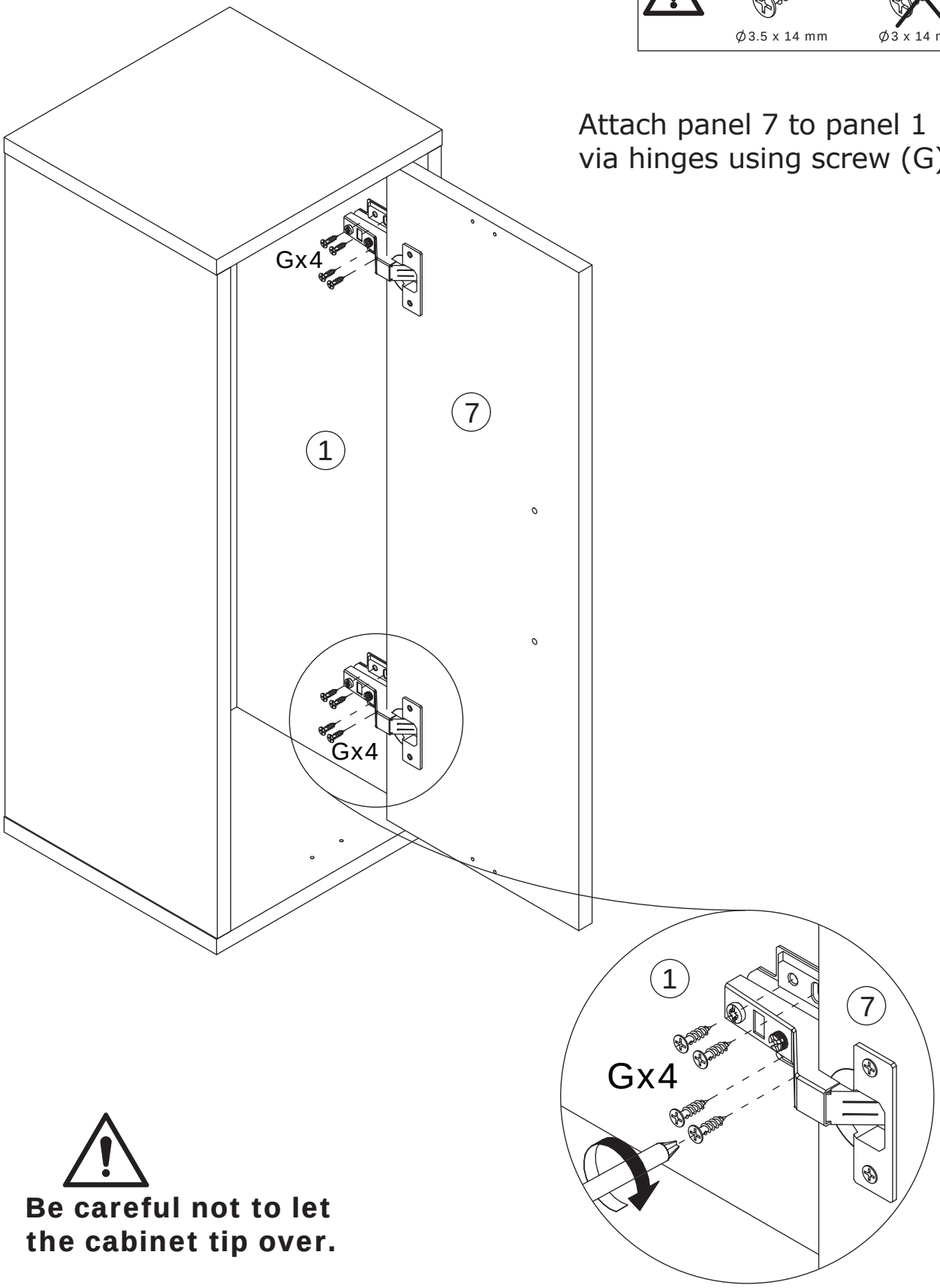

Be careful not to let the cabinet tip over.

Left

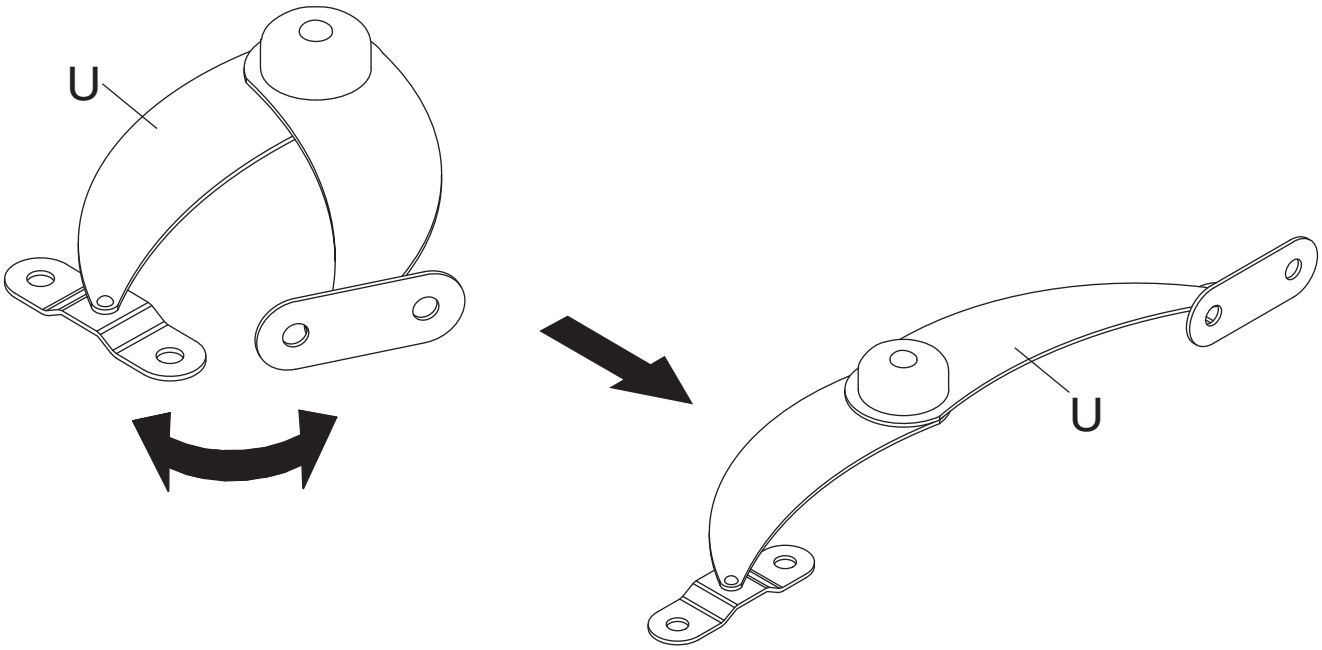

Right

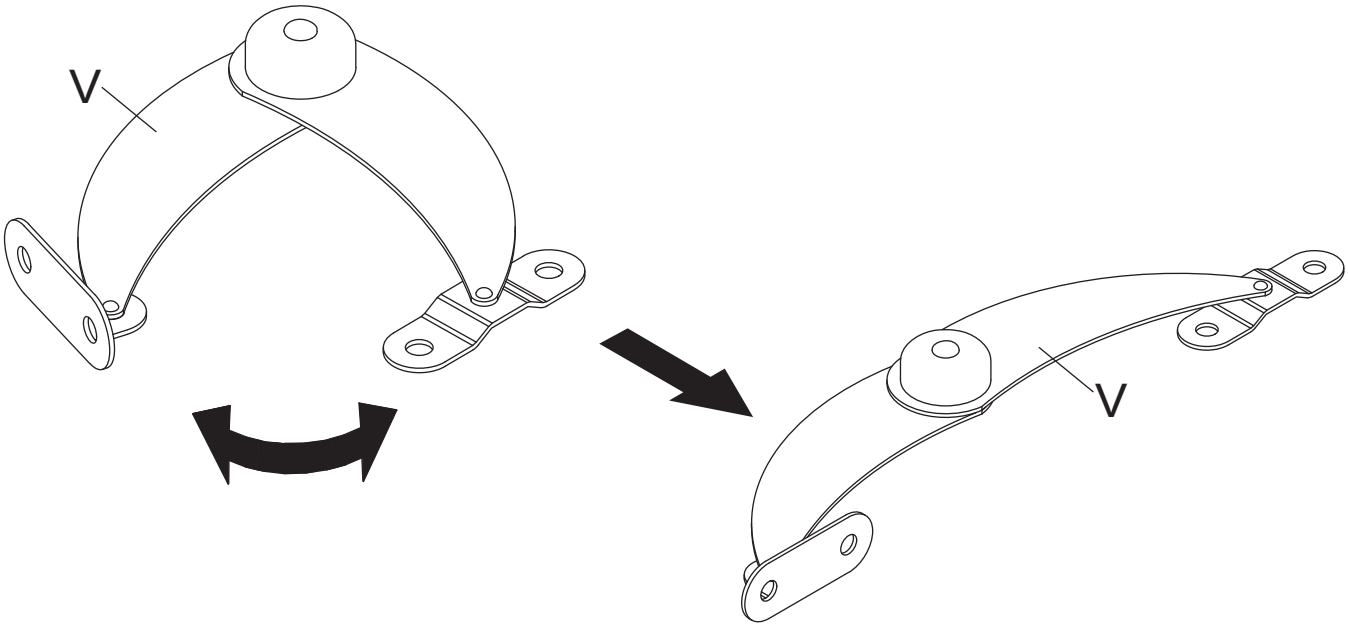

41

G x 8	U x 1	V x 1	
∅3.5 x 14 mm	Left	Right	

	G	S
	∅3.5 x 14 mm	∅3 x 14 mm

Be careful not to let the cabinet tip over.

Secure hinge (U) and (V) to panels 2, 7, and 3 using screw (G).

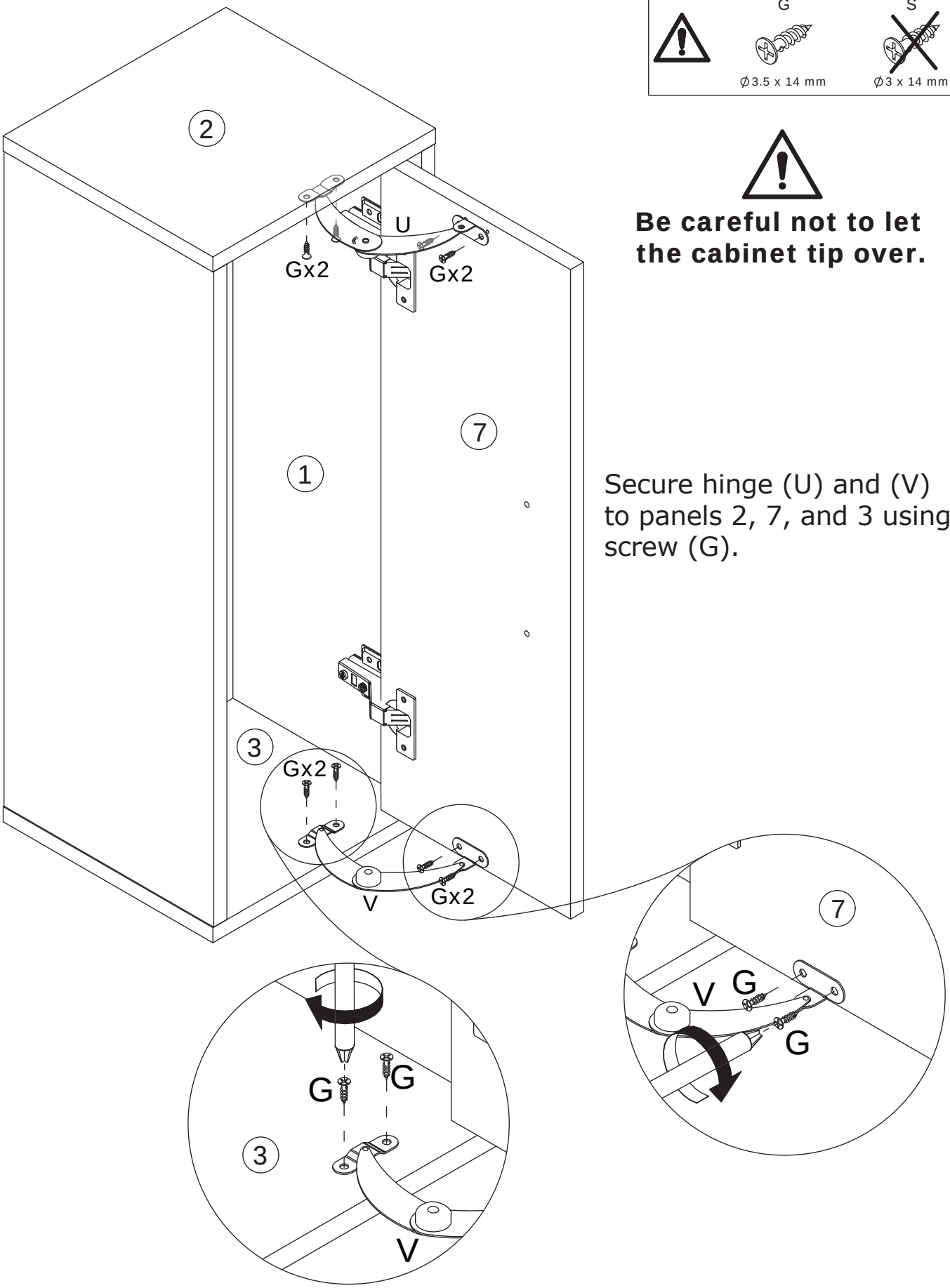

42

H x 1	J x 2	
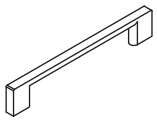	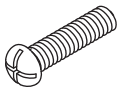 ∅4 x 18 mm	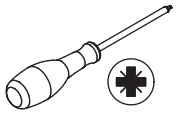

Secure handle (H) to panel 7 using screw (J).

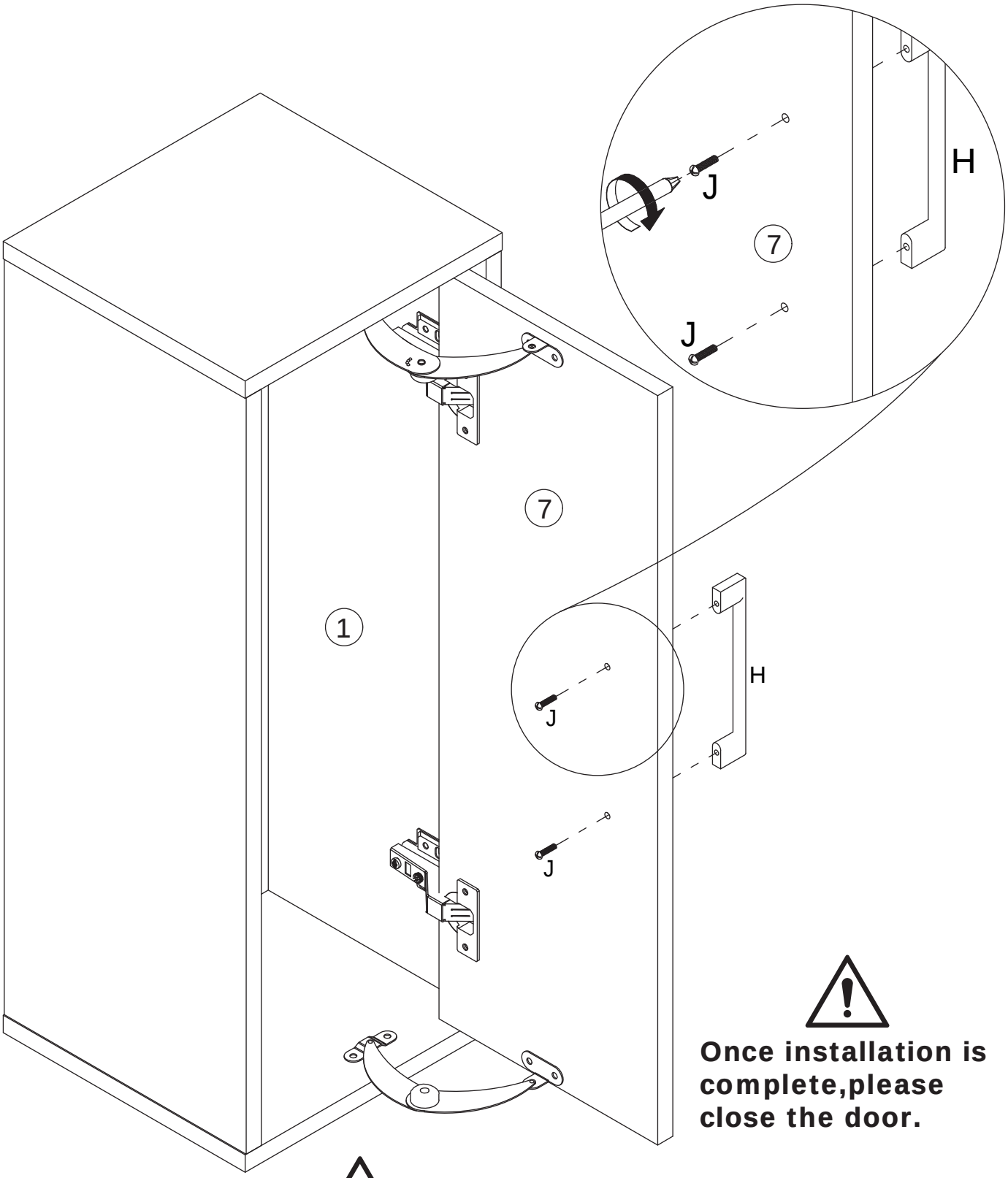

Once installation is complete,please close the door.

Be careful not to let the cabinet tip over

43

R x 6	S x 6	
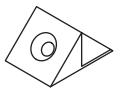	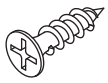 ∅3 x 14 mm	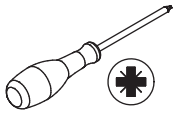

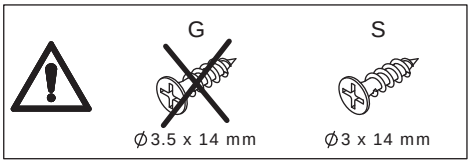

Flip the cabinet. Insert clip (R) into the available slots, then secure them with screw (S).

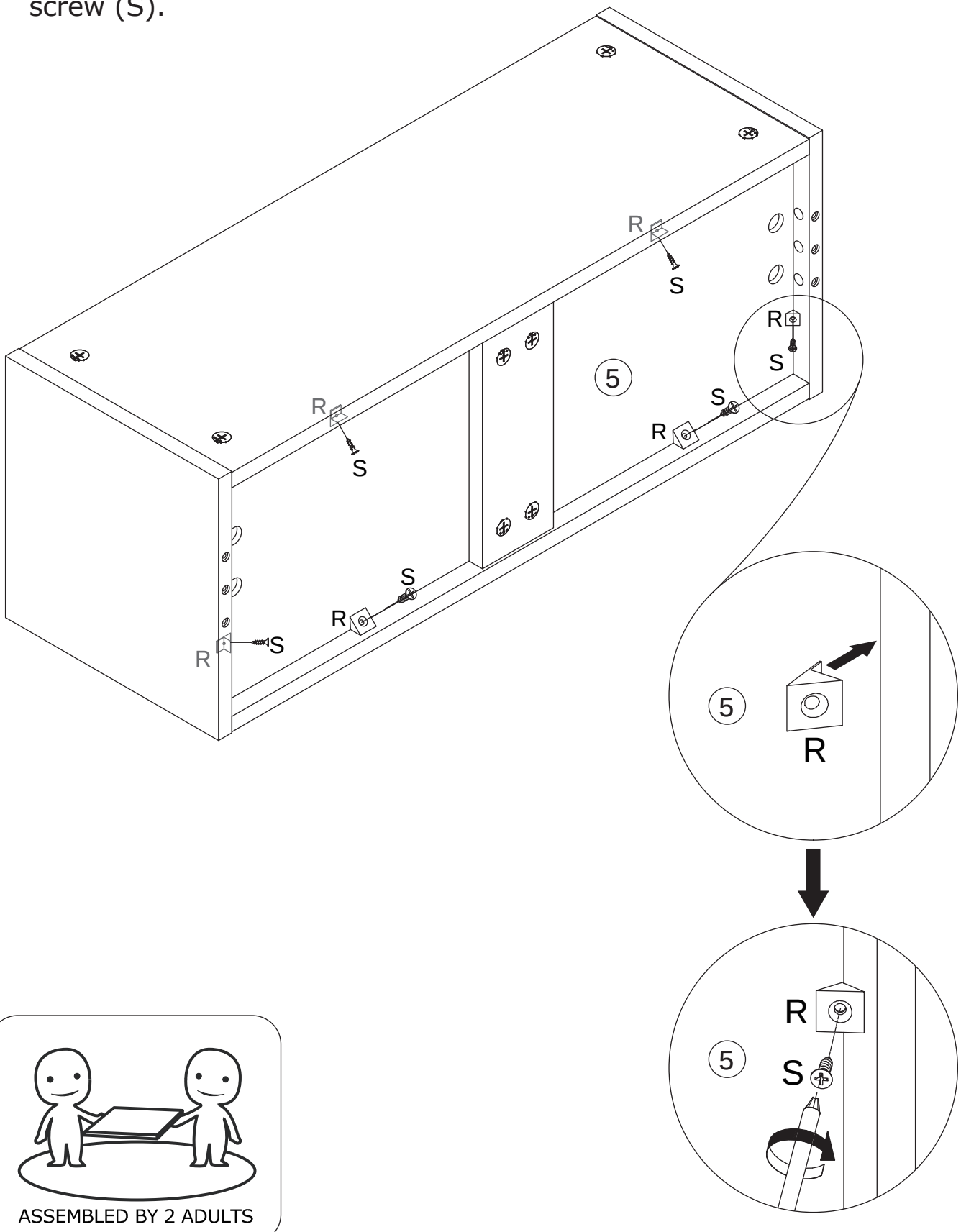

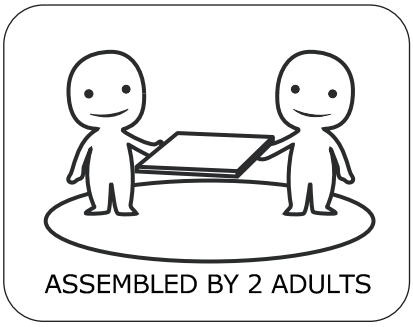

Function of this knob:
Adjust the front-rear distance of part (W-1).

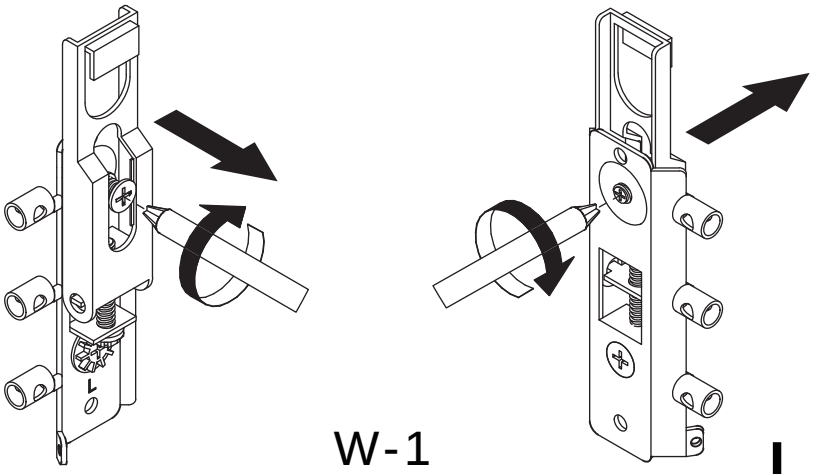

W-1

Left

Function of this knob:
Adjust the vertical distance of part (W-1).

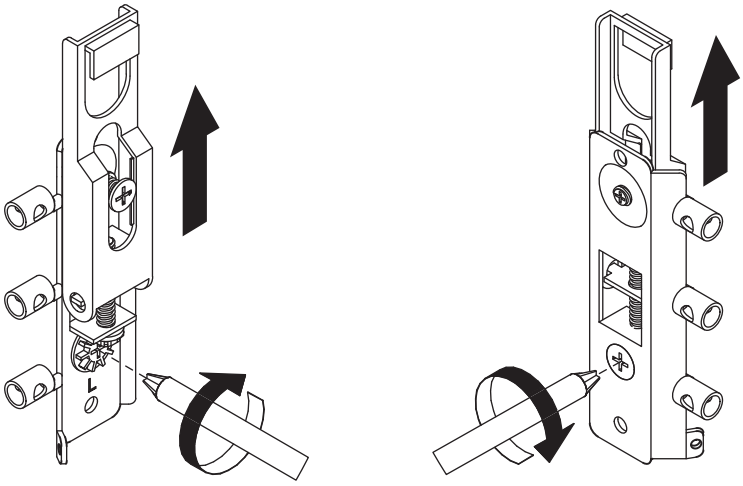

Turning the screwdriver in the opposite direction will adjust part (W-1) and part (W-2) in opposite directions.

Function of this knob:
Adjust the front-rear distance of part (W-2).

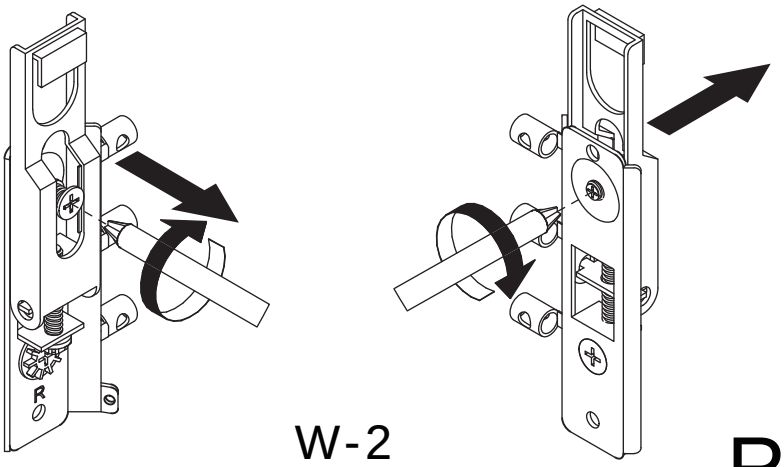

W-2

Right

Function of this knob:
Adjust the vertical distance of part (W-2).

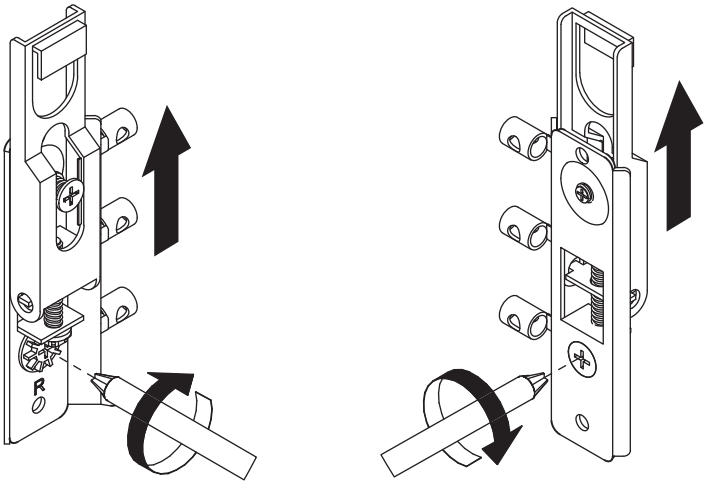

44

W x 1	W x 1	X x 8	
W-1(Left)	W-2(Right)	∅3.5 x 25 mm	

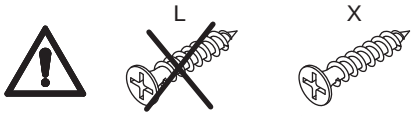

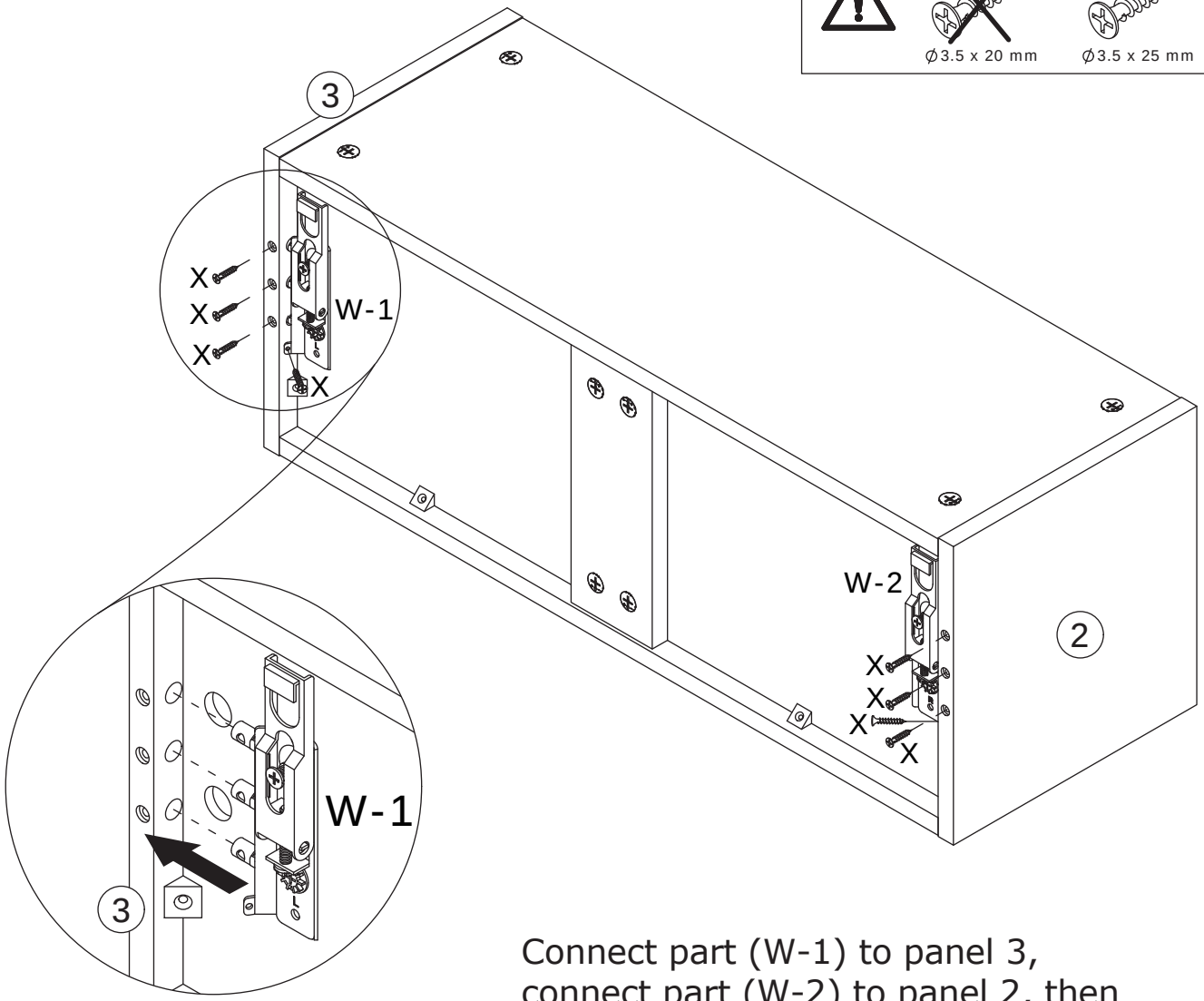

Connect part (W-1) to panel 3, connect part (W-2) to panel 2, then secure them using screw (X).

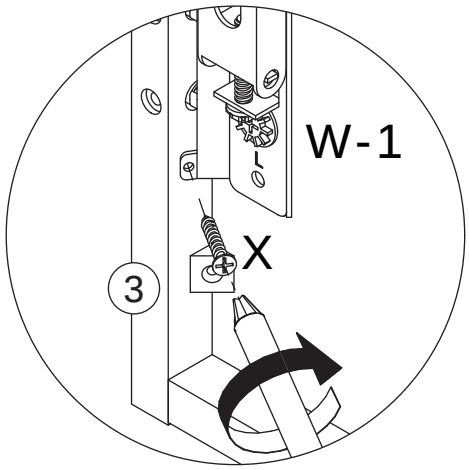

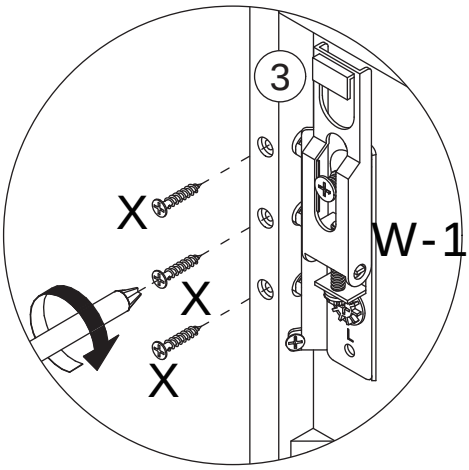

45

AA x 4	BB x 4	CC x 1	DD x 1	
∅6 x 12 mm		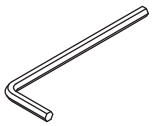	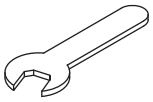	

Connect the two pieces of part (21) using screw (AA) and nut (BB).

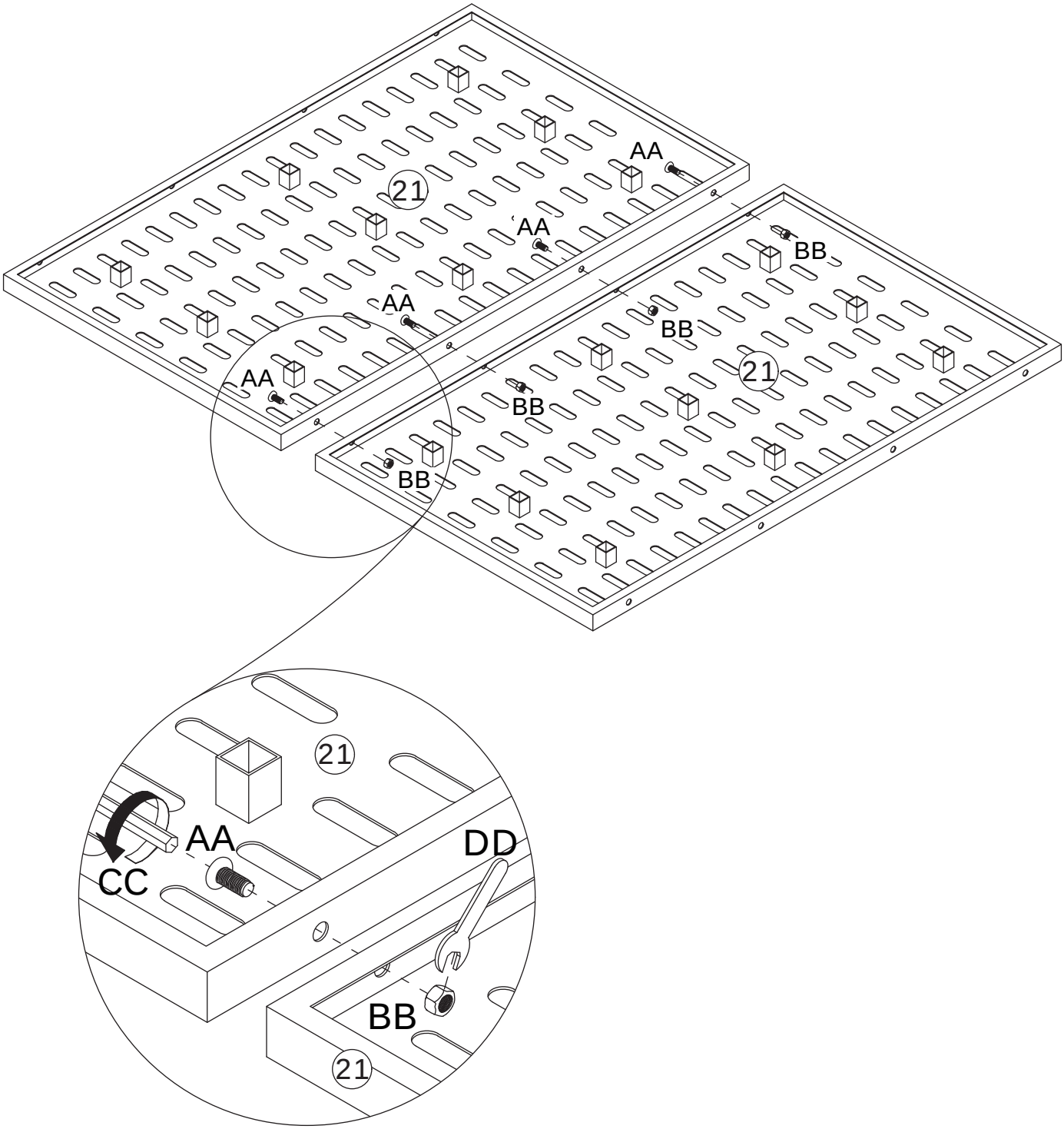

46

P x 12	EE x 12	
∅8 x 38 mm	∅4 x 68 mm	

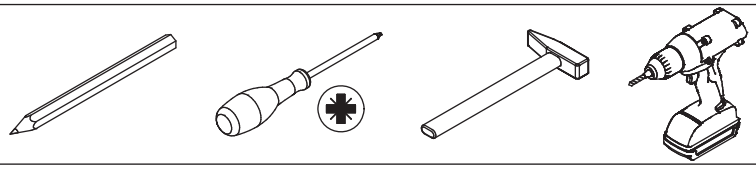

Drill holes to wall, and insert the expansion screw (P).
Secure the unit to the wall using screw (EE).
Note: Align part (21) with the edge and bottom of panel 8.

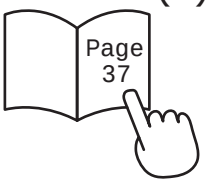

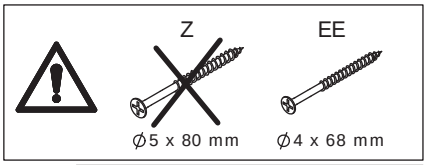

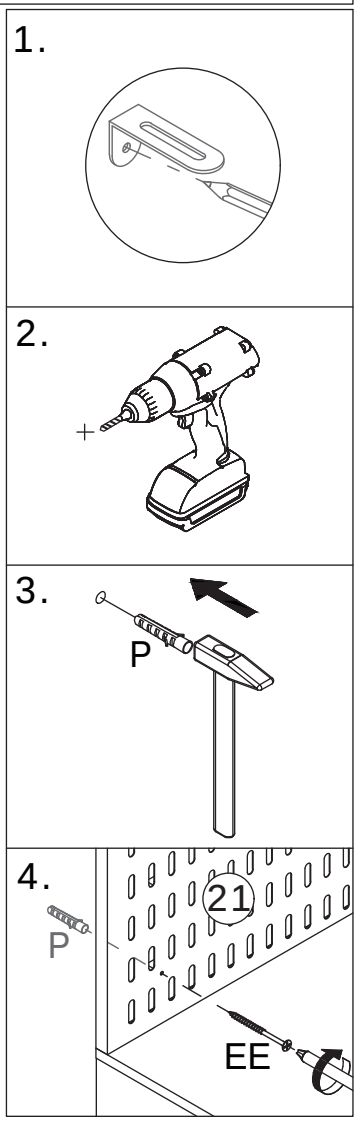

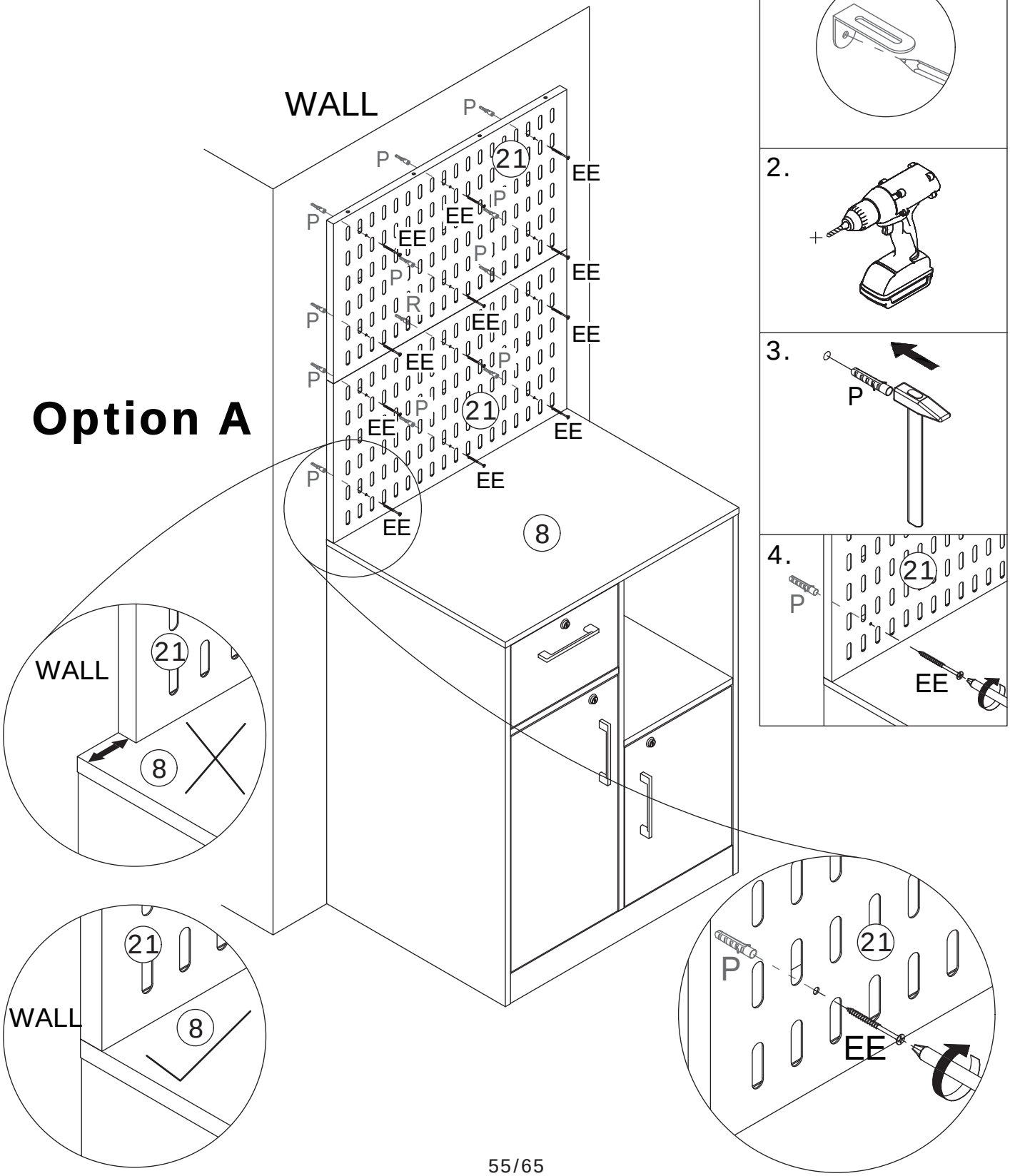

47

Q x 12	EE x 12	
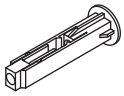	∅4 x 68 mm	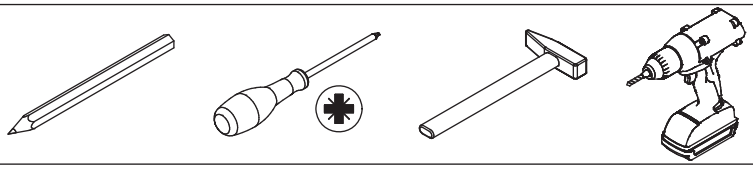

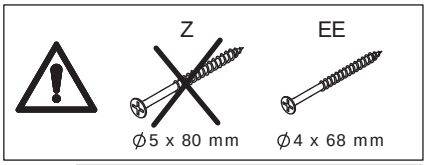

Drill holes to wall, and insert the expansion screw (Q).
Secure the unit to the wall using screw (EE).
Note: Align component (21) with the edge and bottom of panel 8.

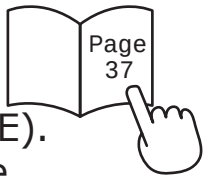

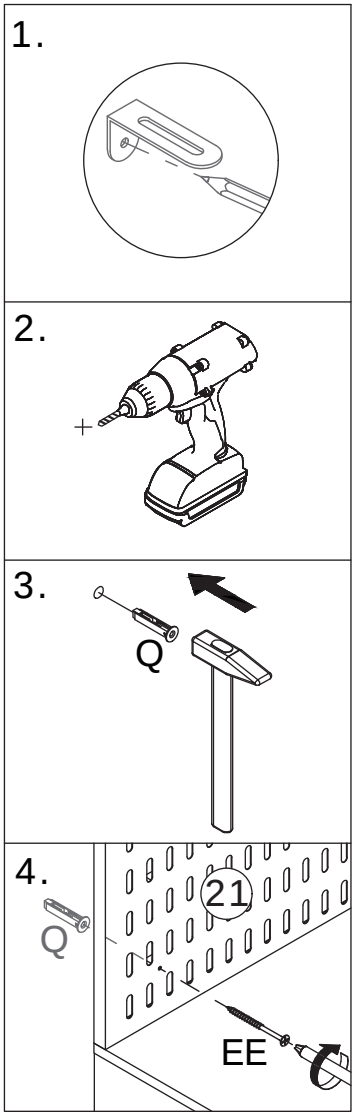

Option B

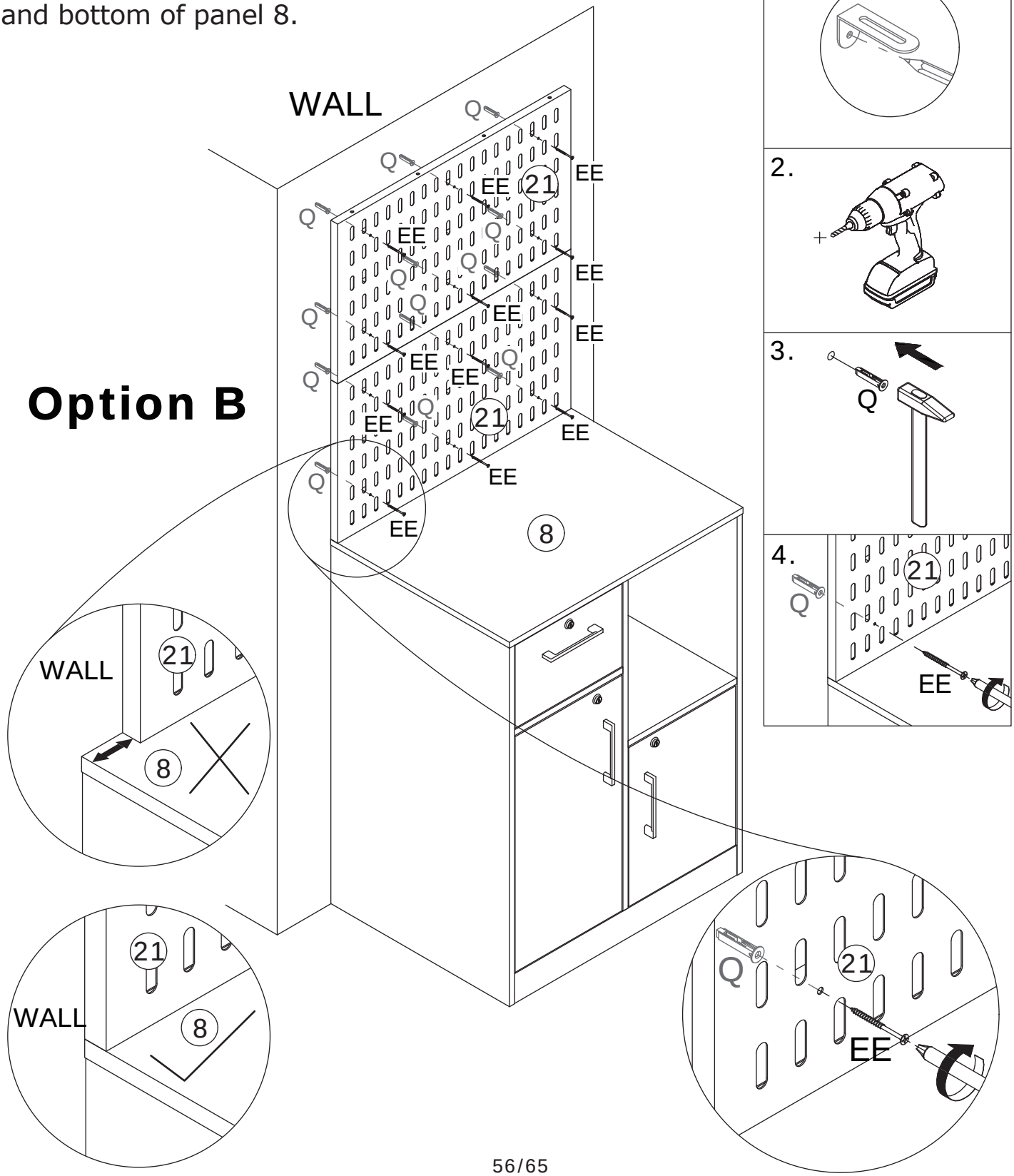

This step shows you how to position part (W-3).

Ensure the position of part (W-3) according to the mounting distance.

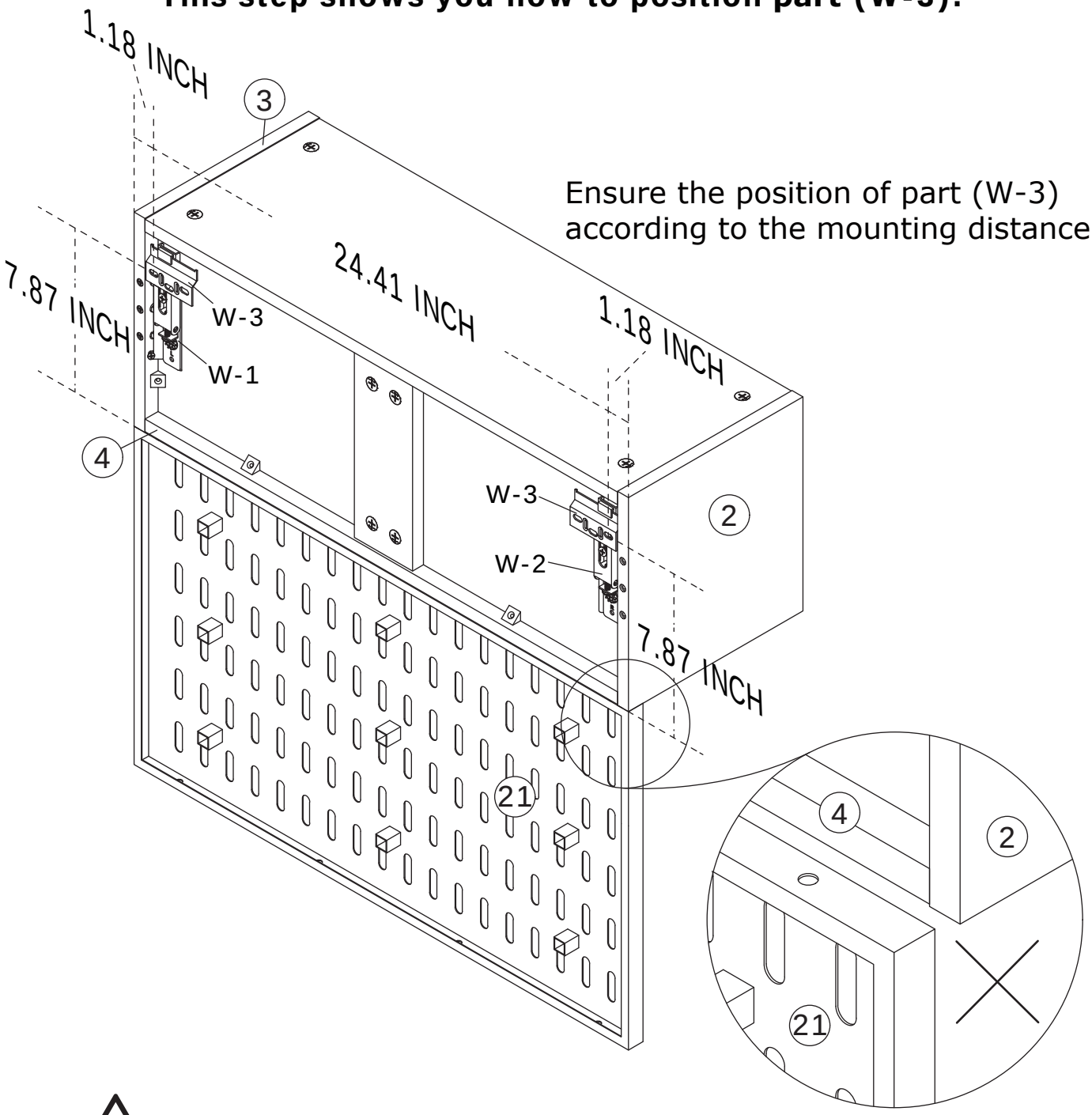

Before positioning, align the top cabinet with the edge and top of part (21).

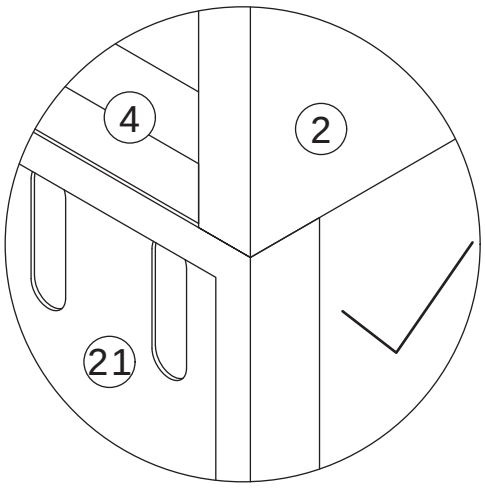

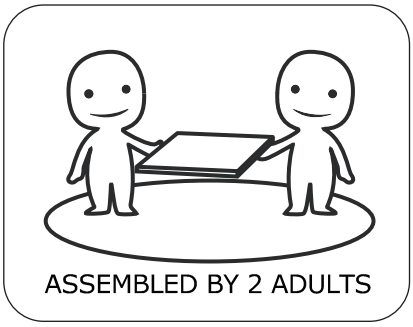

48

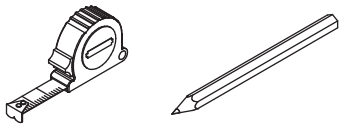

The arrow on part (W-3) indicates the alignment point.

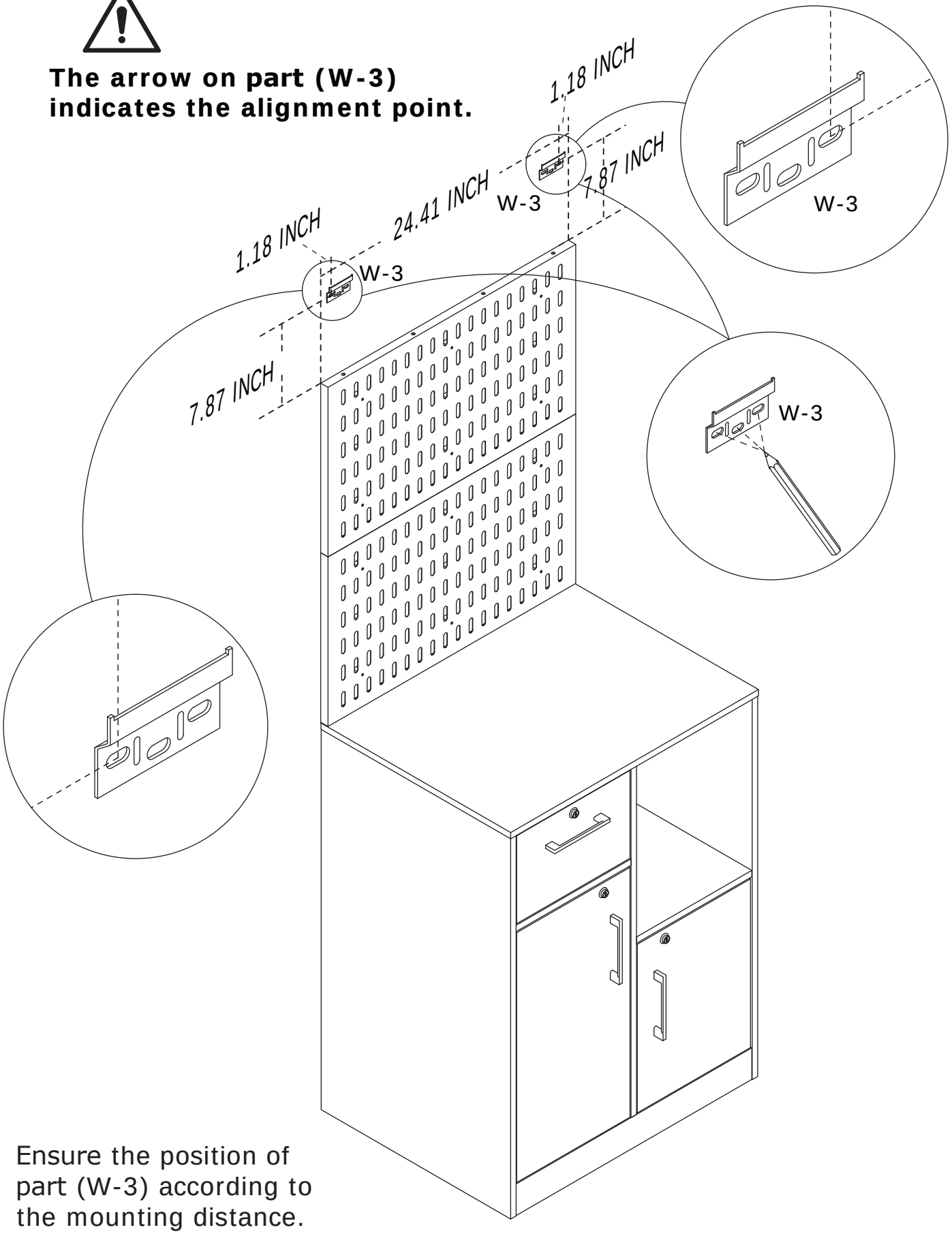

Ensure the position of part (W-3) according to the mounting distance.

49

W x 1	Y x 6	Z x 6	
W-3 x2	∅8 x 80 mm	∅5 x 80 mm	

	Z	EE
	∅5 x 80 mm	∅4 x 68 mm

Option A

Page 37

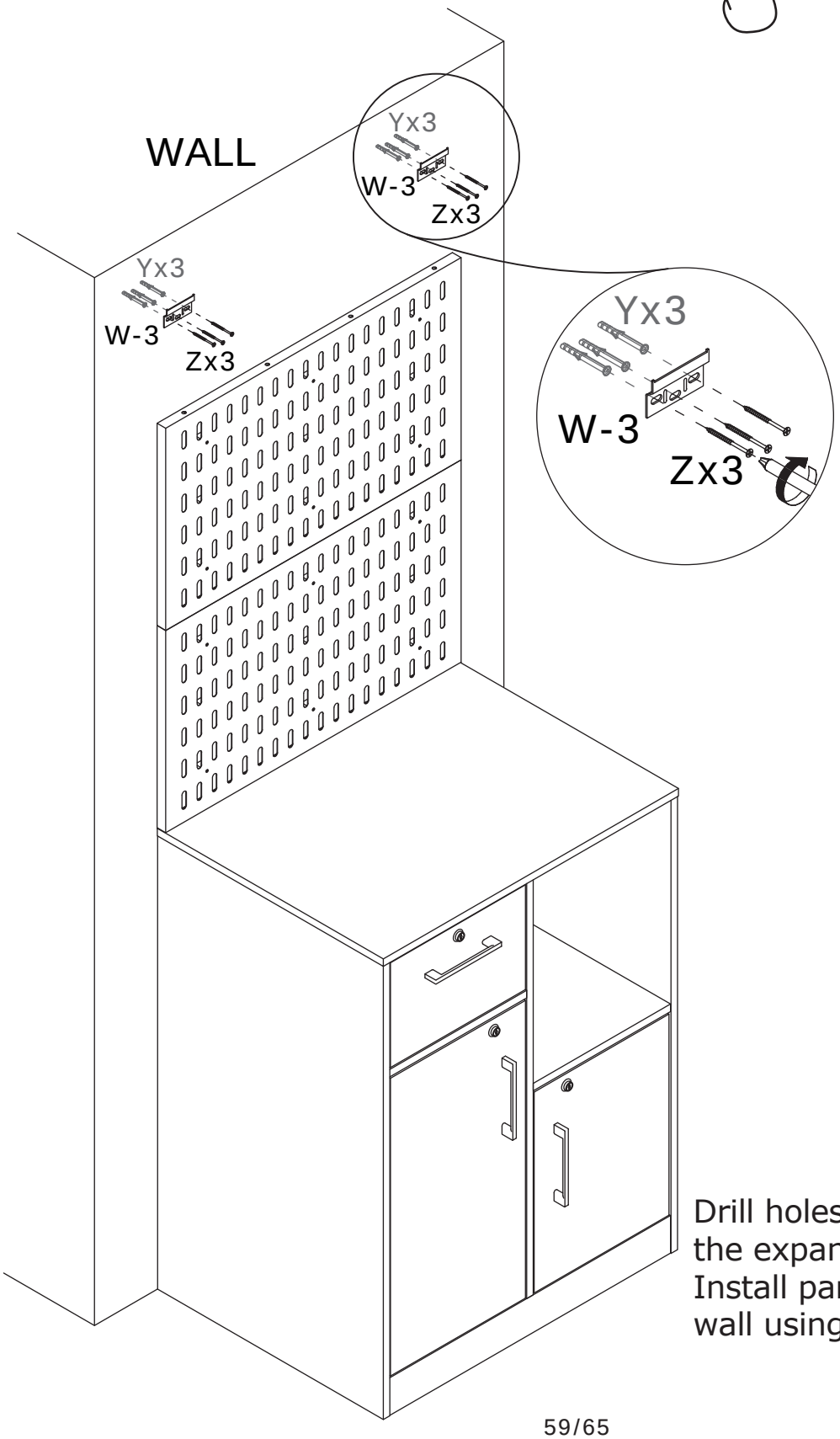

1.

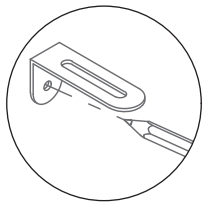

2.

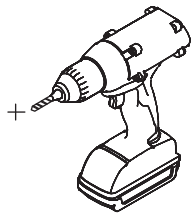

3.

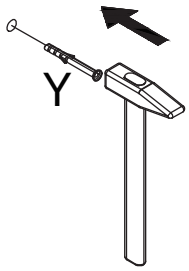

4.

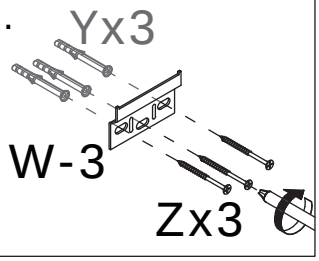

Drill holes to wall, and insert the expansion screw (Y). Install part (W-3) onto the wall using screw (Z).

50

W x 1	Q x 6	EE x 6	
	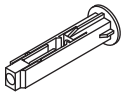	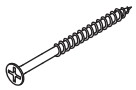	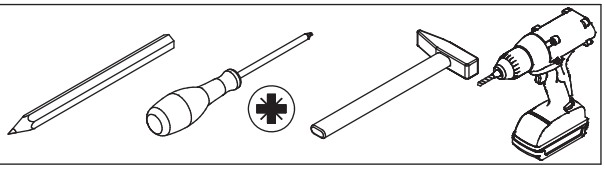

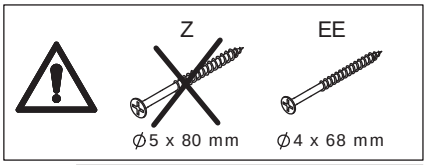

Option B

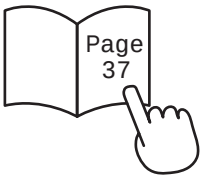

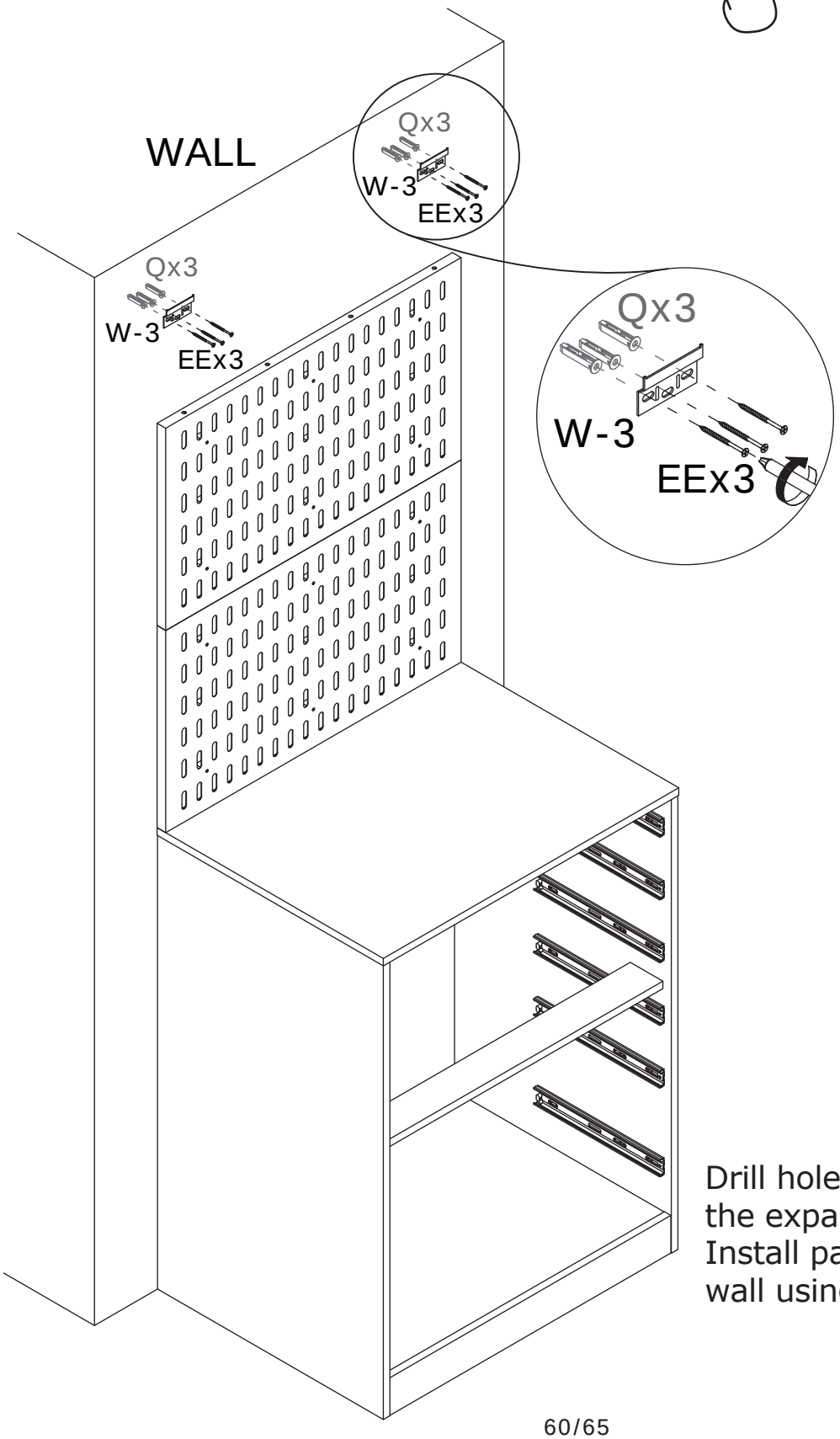

1.

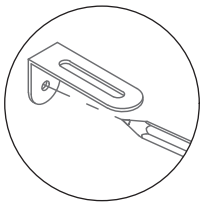

2.

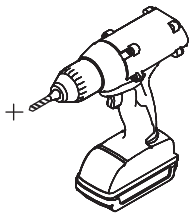

3.

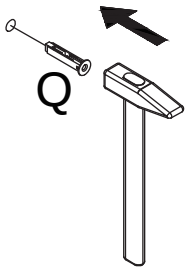

4.

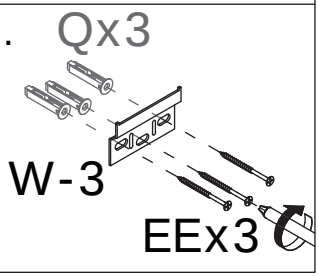

Drill holes to wall, and insert the expansion screw (Q). Install part (W-3) onto the wall using screw (EE)

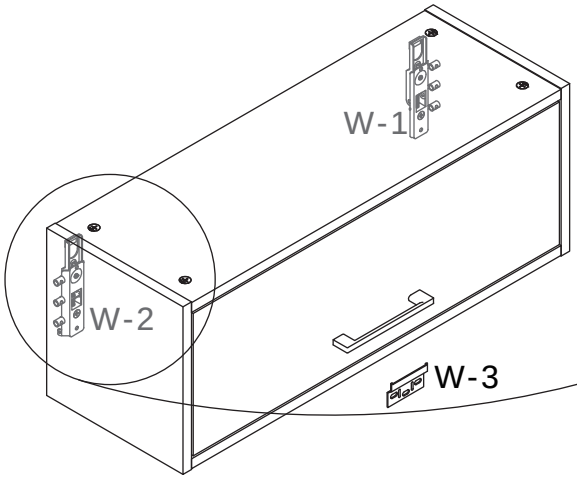

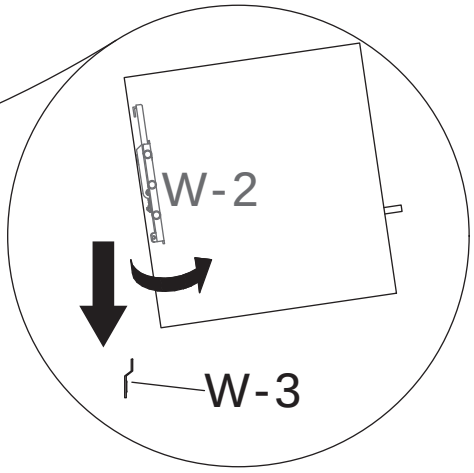

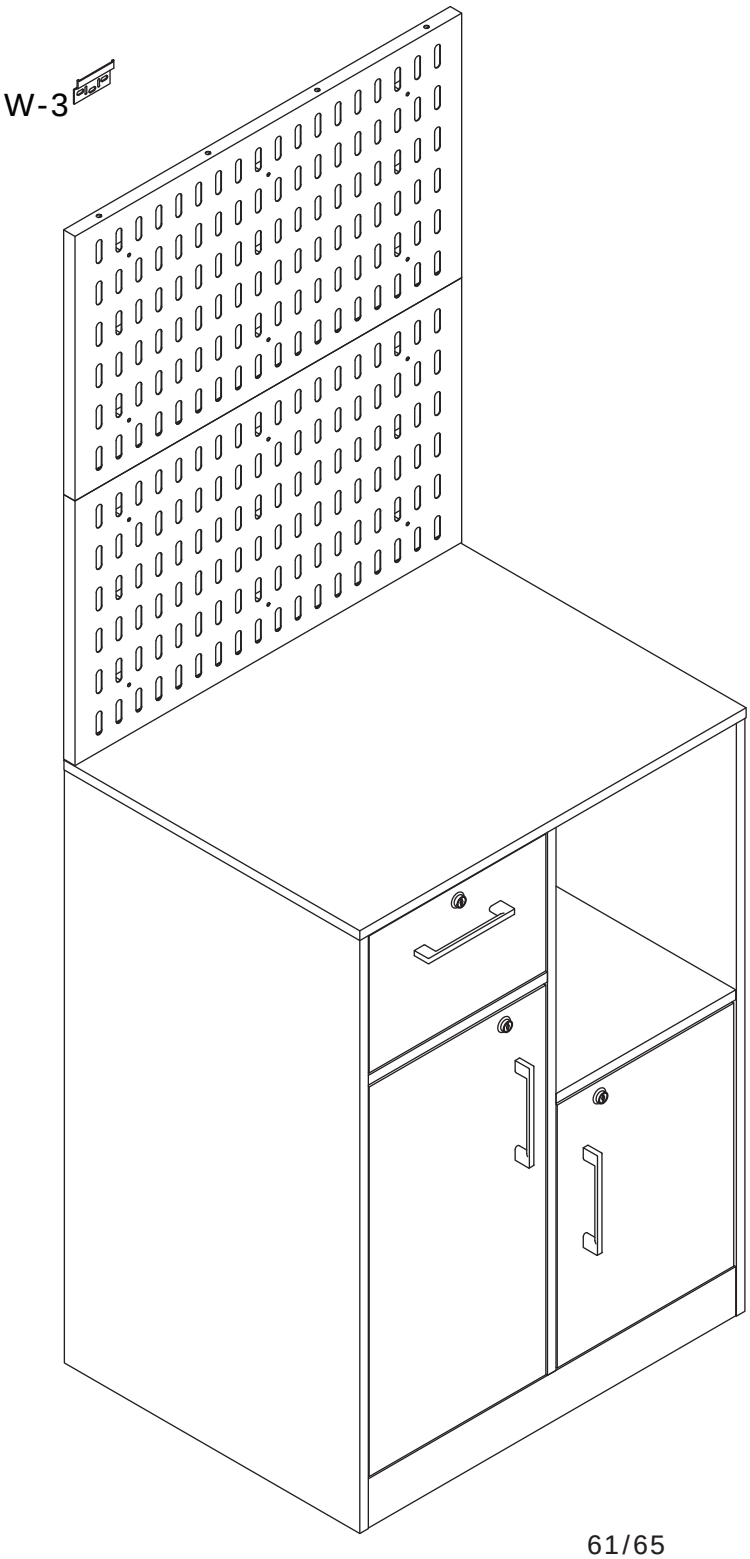

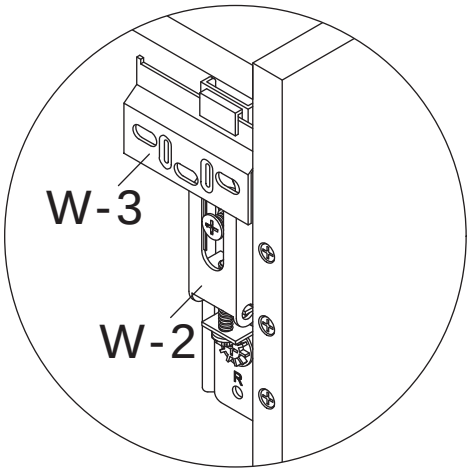

Install the upper cabinet onto part (W-3).

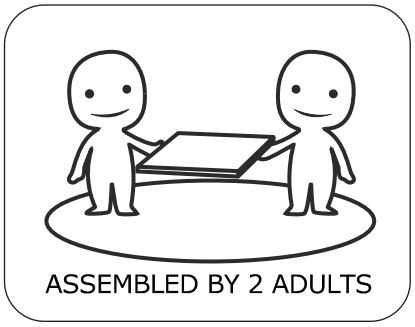

51

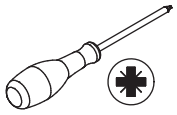

Once the wall cabinet is installed, if it is not aligned with the wall, you can adjust it using the front-to-back adjustment method described on page 39 for parts (W-1) and (W-2).

Issue

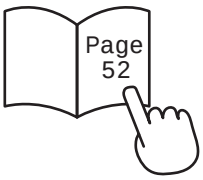

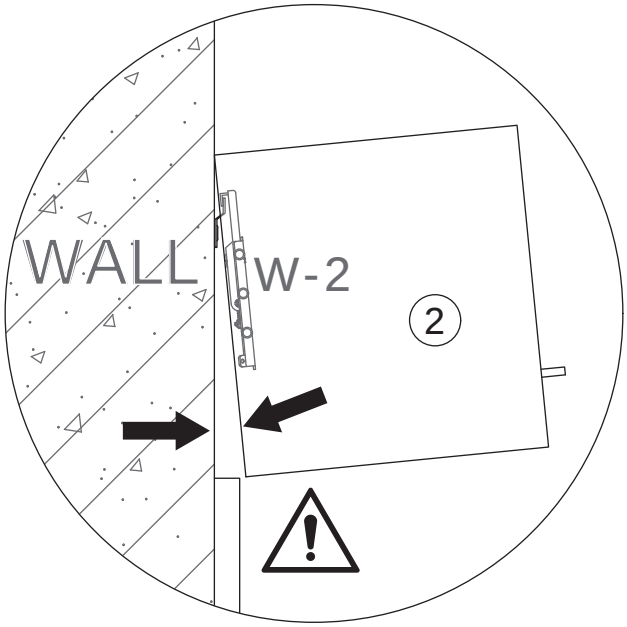

Resolve

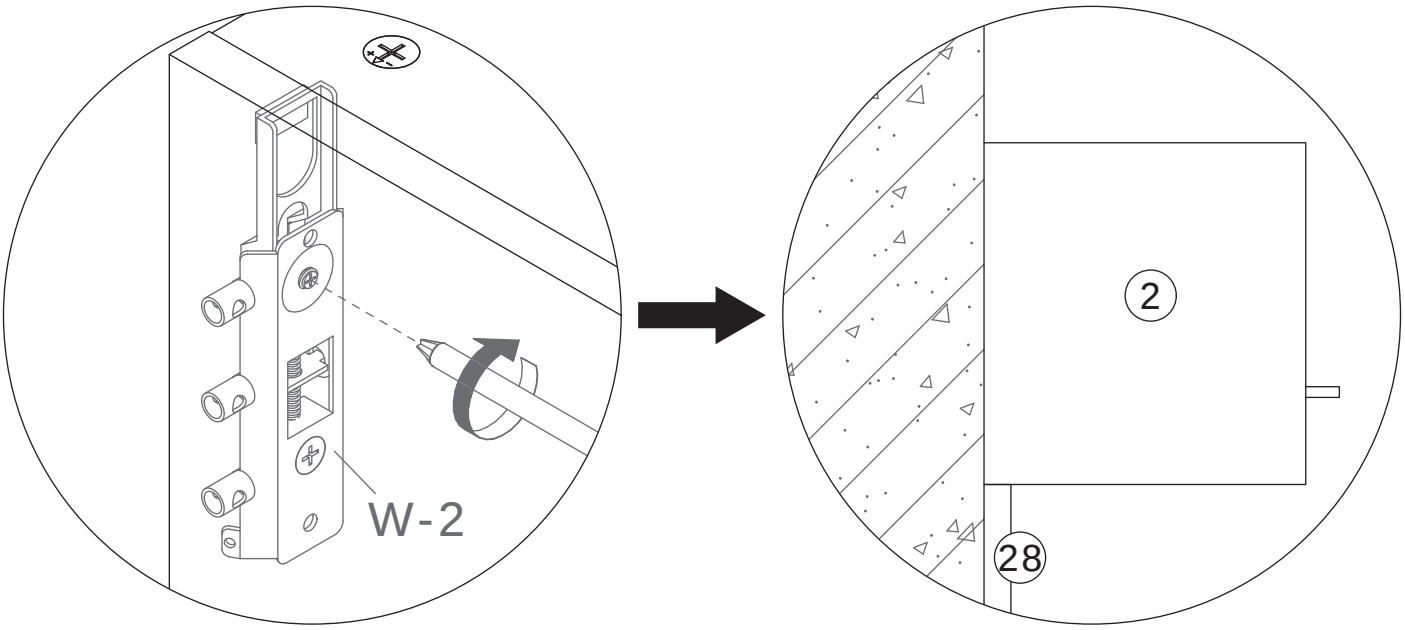

This step requires you to open the door panel.

52

W x 1

W-4

x4

Open panel 7 and install component (W-4) onto panel 5.

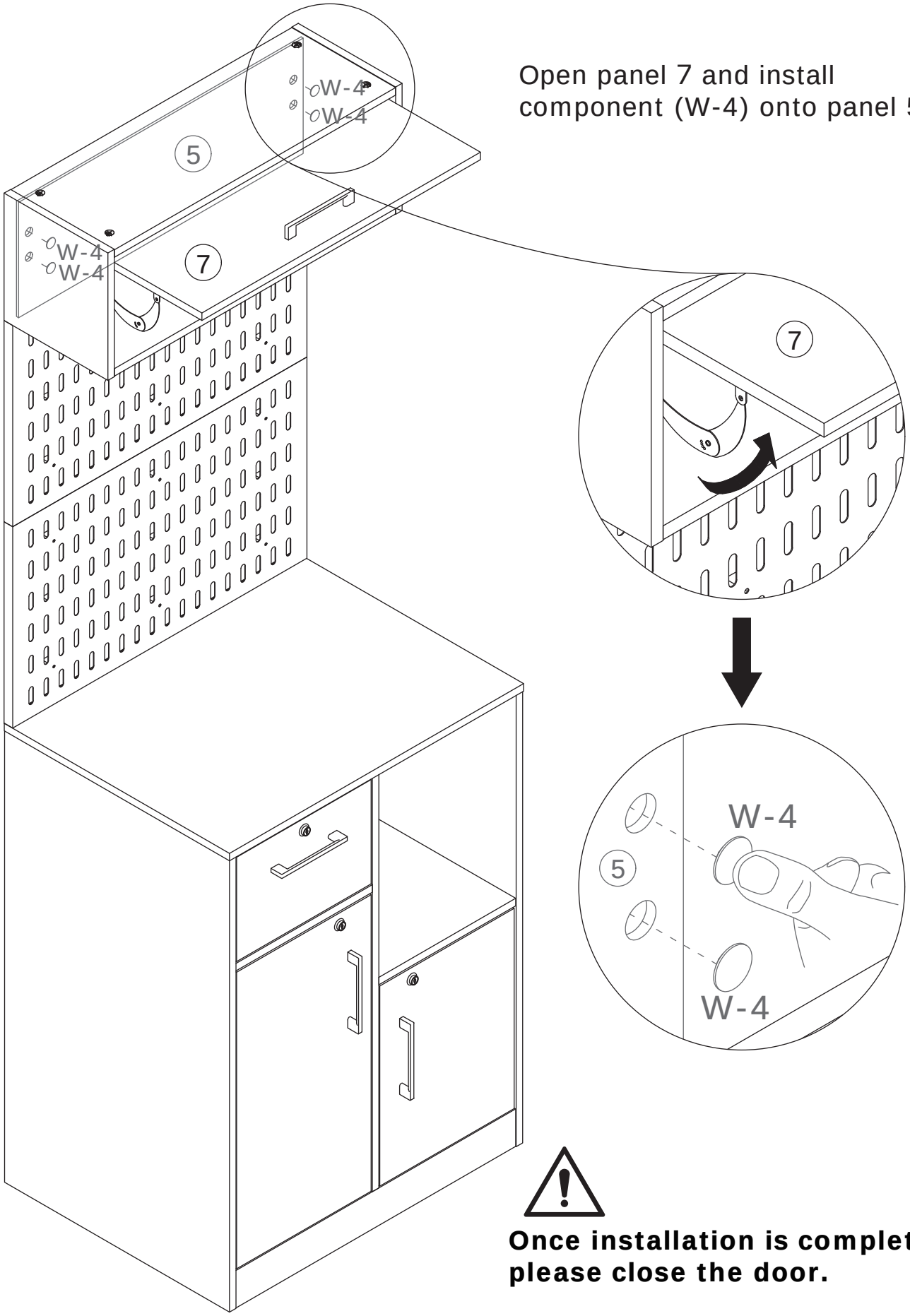

Once installation is complete, please close the door.

53

FF x 1

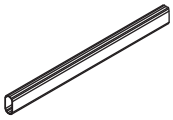

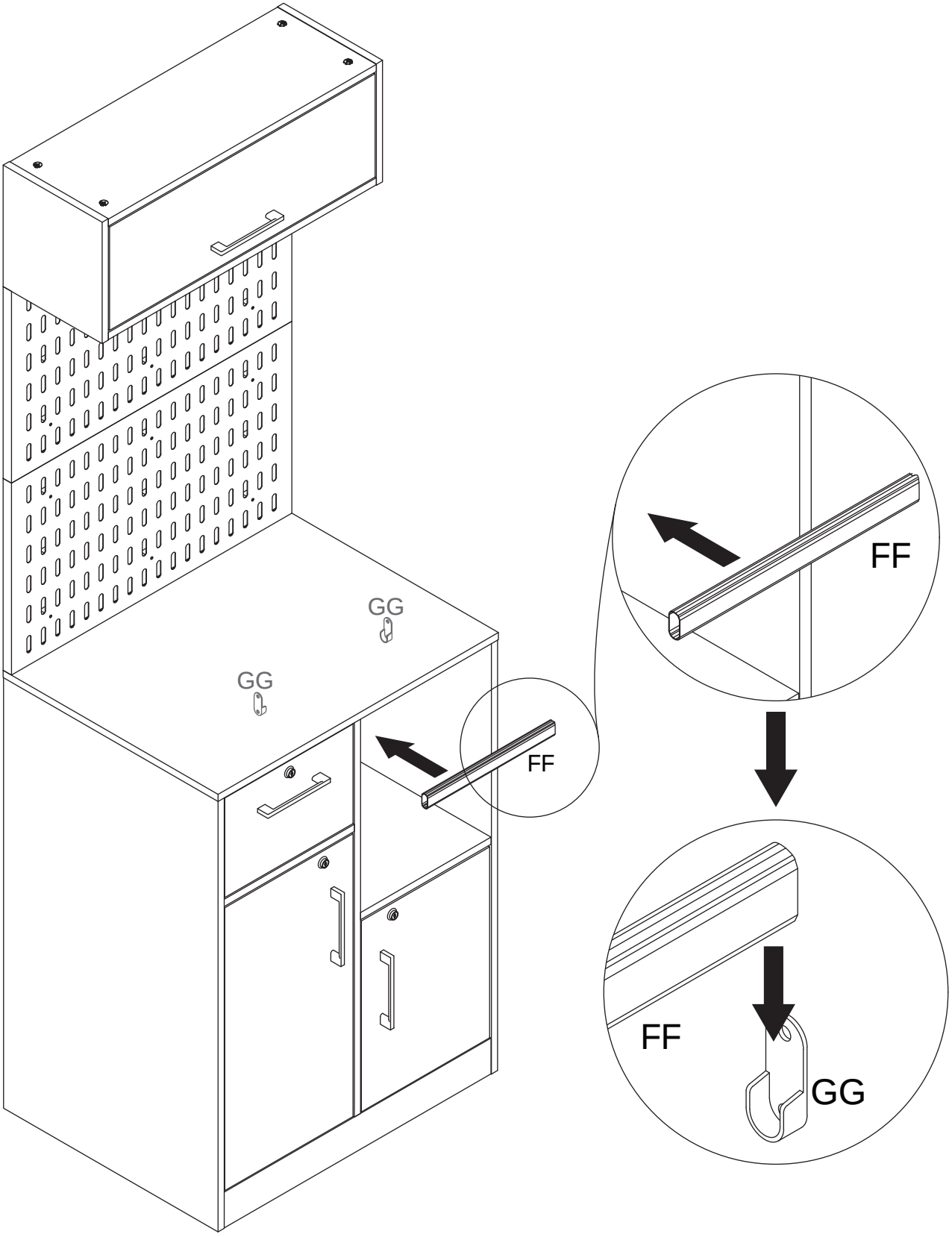

54

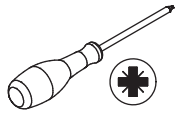

If the door panels are not aligned, please adjust the screws on the hinges according to the illustration.

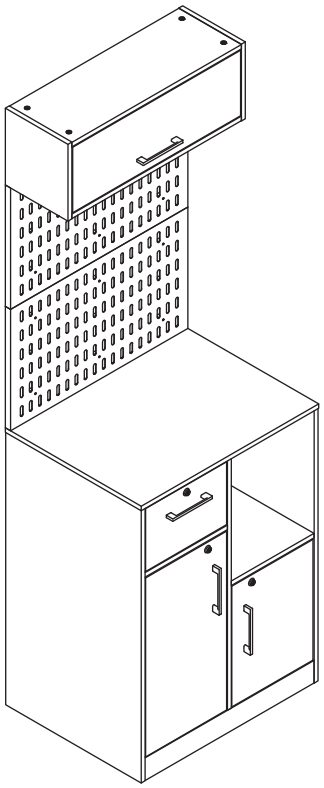

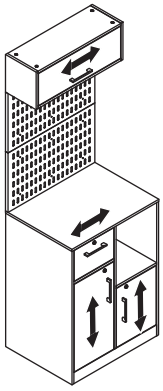

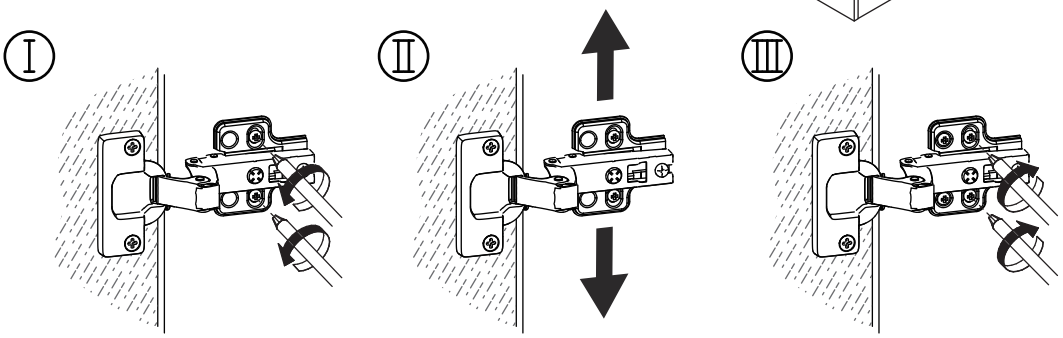

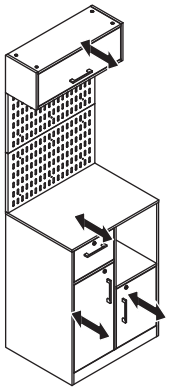

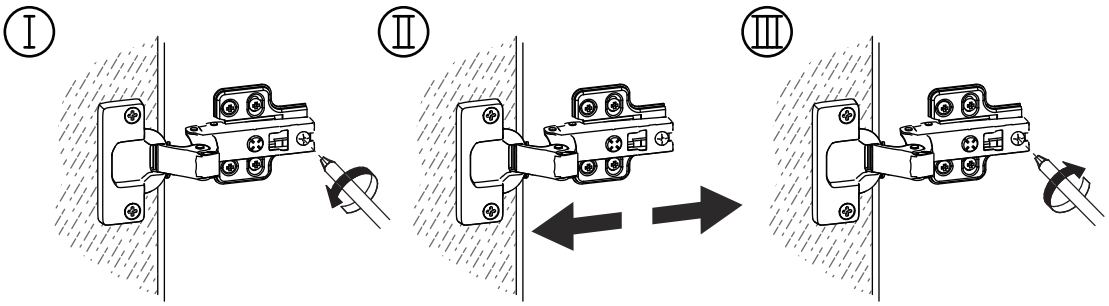

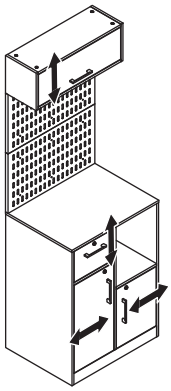

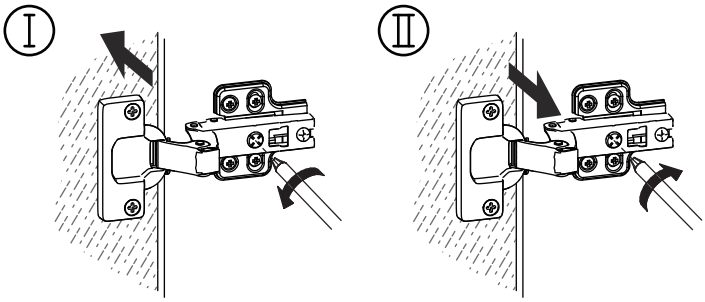

WARRANTY

WARRANTY CLAIMS

•There is a 30-day warranty for broken furniture or any other problems that do not work properly. The warranty will start from the date of purchase which must be verified by proof of purchase.

•Before making a claim, we may be able to answer your query, simply call us. Please leave your purchase order number, along with some details of the problem, if you want a replacement part. We will arrange within 48 hours. If there is out of stock, we will reply with a shipping date.

•The product must be used in accordance with the instructions provided. For health reasons.

•For other reasons, if the furniture needs to be returned, it must be cleaned and dried and operated within 30 days of receipt.

Type of Warranty Claim

•Failure to follow the furniture instructions will invalidate the warranty. Attention please.

•Does not include damage during installation, but includes damage during transportation.

Scope of responsibility

•Shall not bear any responsibility for misuse or user damage and / or loss of parts during the installation of furniture.

•After using, the damage and scratches of the furniture are not covered by the warranty.

The Warranty Relates to All Bought in The Us and Covers The Following Areas

•Sheet parts: 1 month from the date of purchase.

•Electrical parts: 1 month from the date of purchase.

RETURNS

CHANGED YOUR MIND AND NEED TO RETURN YOU ITEM?

PLEASE FOLLOW THE BELOW INSTRUCTIONS:

- If you have purchased and have simply changed your mind, follow the retailer's instructions for returns.

DEFECTIVE ITEMS

- If your item is defective in any way, i.e. it doesn't work but you can't identify why, in the first instance, please call us.

DAMAGED ITEMS

- If you receive an order with obvious shipping damage from the retailer, then we suggest the delivery is refused. If the delivery has been accepted and then shipping damage is found, please follow the specific instructions advised by the retailer.
  In all circumstances please save all packaging material and paperwork for the order. Please be aware that if you dispose of packaging material or attempt to return the merchandise without contacting the fulfiller, you jeopardise your chances of making a claim, and you may not receive a credit for the return.