Assembly Instructions

Caution : You must read this before you proceed.

BISTRO CHAIR

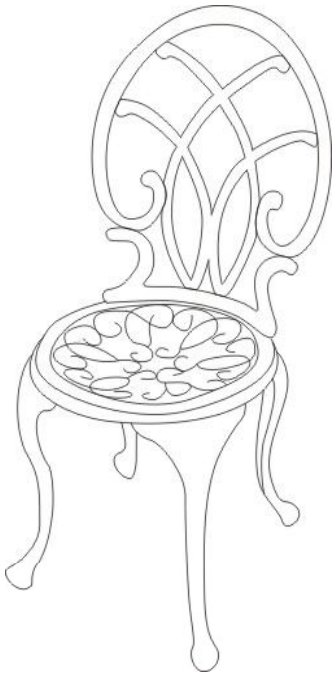

CAUTION : This chair is NOT a TOY.
Keep your child / children at bay in the process of assembly.

Part list

No.	Picture	Description	Qty
A		Backrest	1
B		Chair Seat	1
C		Chair Leg with pre-attached Leveller	4

Hardware

No.	Picture	Description	Qty
①		Flat Washers (8mm)	11
		Spring Washers (8mm)	11
		Nuts (8mm)	11
⑥		Spanner	1

Assembly Preparation

Before Beginning Assembly:

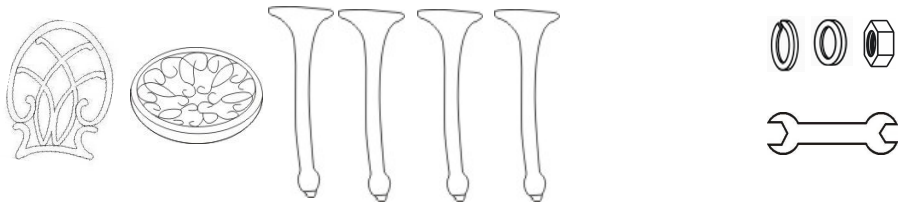

- Read instructions, cover to cover-
- Have 2 adults on hand for assembly-
- Do not assemble on flooring or carpet-
- Assemble on a clean non-marring surface (packing foam)-
- Save all packaging until finished-

Assembly Steps

Overview

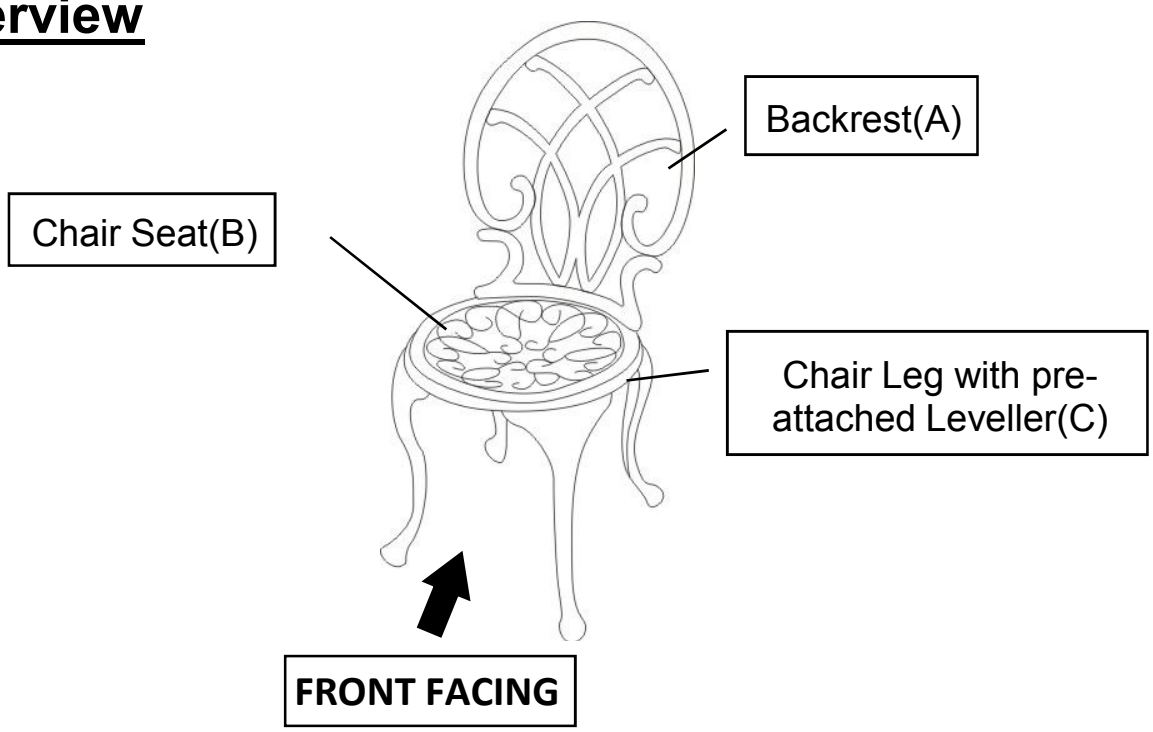

This Bistro Chair has multiple parts and may require up to some 30 minutes to assemble.
To give you an overview of the Chair parts, the above picture is to help you put the various parts into perspective.
Please read through the instructions herebelow to familiarise the parts and steps before assembly.

Step 1

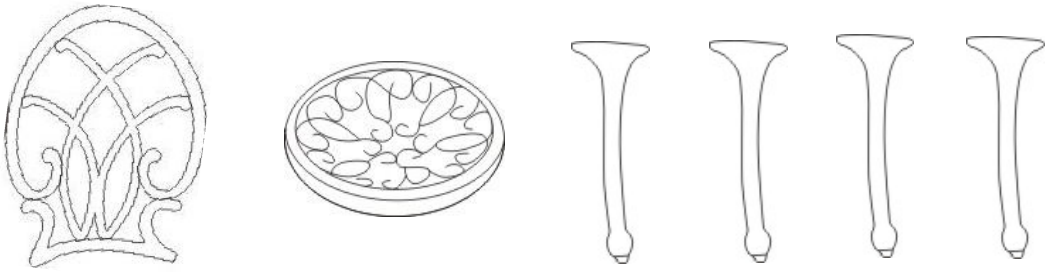

Unpack and place all parts on a clean soft surface.

Step 2

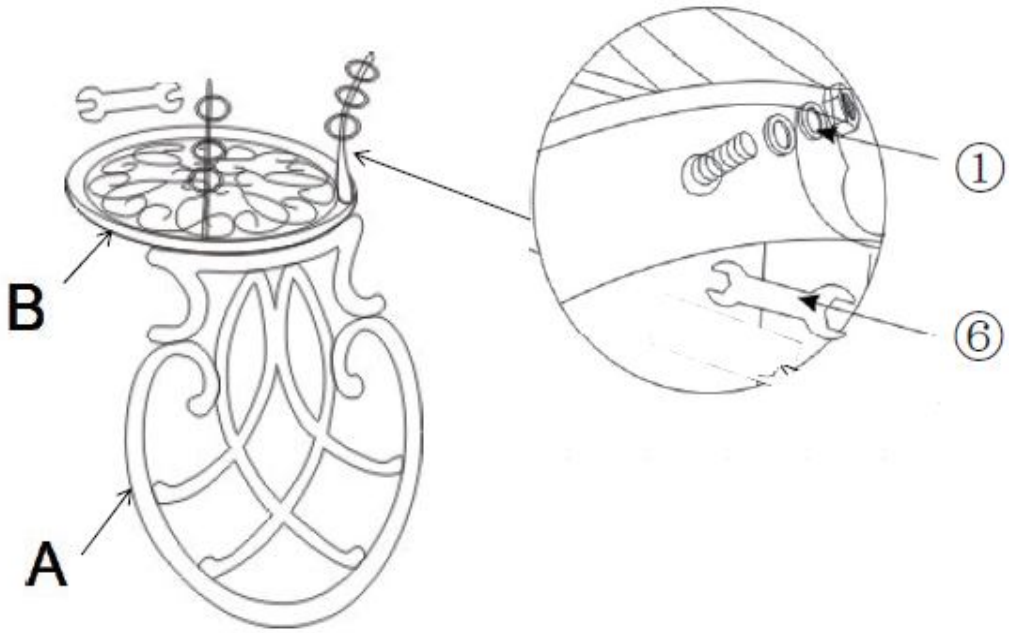

Attach Backrest(A) to Chair Seat(B) by using Washers, Spring Washers and Nuts(①).
Tighten the Nut using the Spanner(⑥).
DO NOT OVERTIGHTEN at this stage.

Step 3

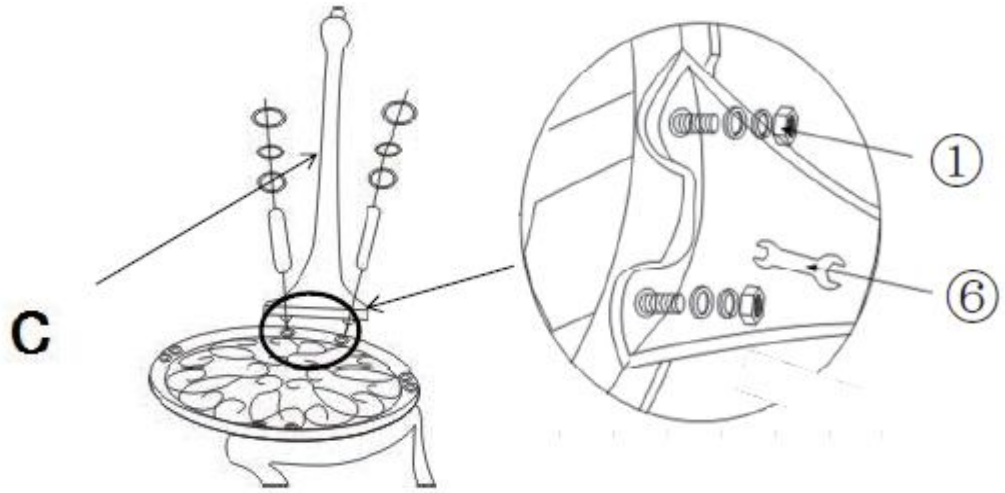

Attach Chair Legs(C)to the Chair Seat(B) by using Washers, Spring Washers and Nuts(①).
Tighten the Nuts using the Spanner(⑥).
Repeat this procedure for the remaining Legs.
DO NOT OVERTIGHTEN at this stage.

Step 4

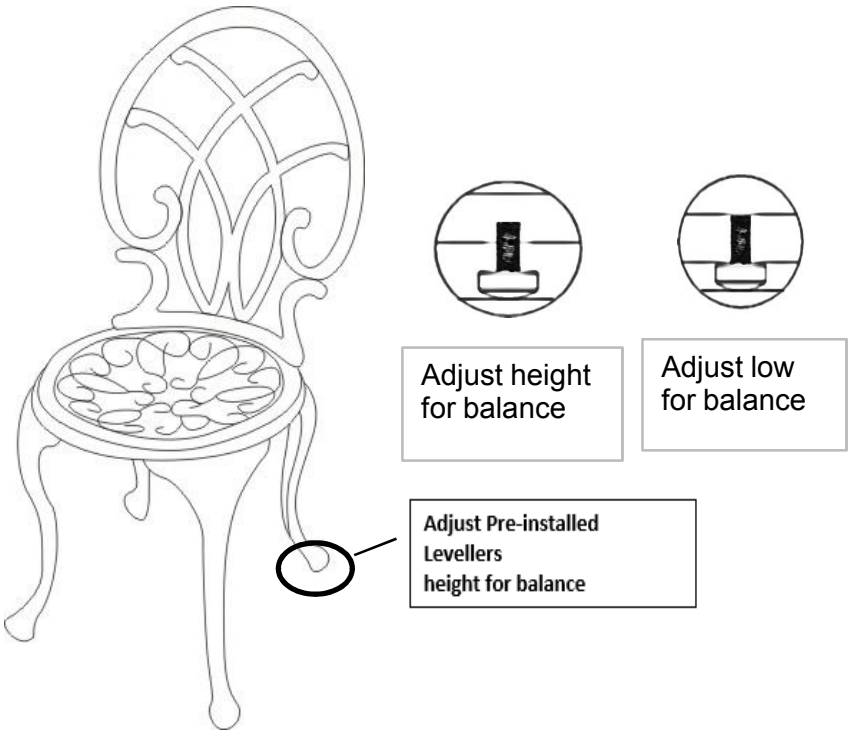

Turn the chair right side up.
Upon completion of full assembly and bolted up-all screws can be tightened down.
Adjust the Legs with pre-installed Levellers until the chair is level with the ground.
Your chair is now ready for use.

Care &Maintenance

- Do not put hot items directly on furniture surface.
- Do not clean furniture with harsh cleansers or polish.
- To obtain the longest lifespan of your outdoor prodcts, minimizing exposure to direct sunlight is recommended.
- Children should not climb or jump on the furniture.
- Do not write on furniture without a padded barrier to protect the surface.
- To obtain the longest lifespan of your outdoor products, avoid extended and lengthy exposure to rain, snow, and direct sunshine. Whenever possible cover the product and /or place under patio or awnings.
- Not for commercial use. For residential use only .
- Stains may be removed with mild soap solution and damp cloth.

- Dust and pick-up spills using a clean, non-colored, lint-free cloth .