ASSEMBLY INSTRUCTIONS
30 INCH BATH VANITY

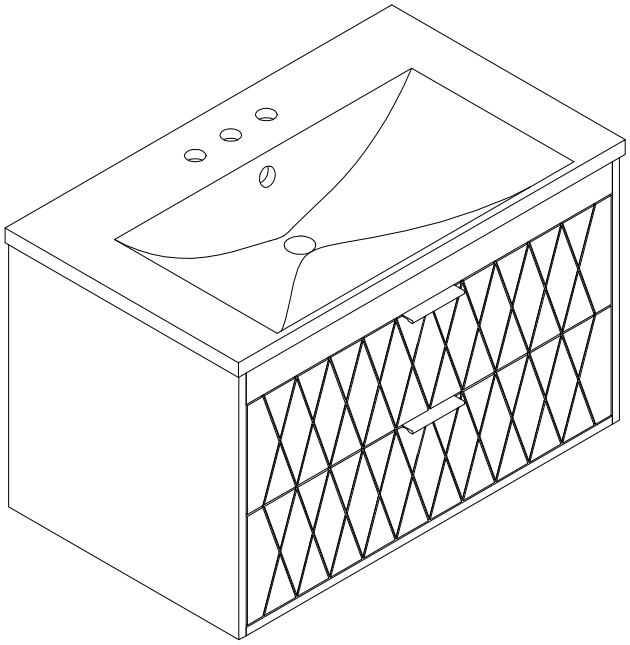

Thank you for purchasing this quality product. Be sure to check all packing material carefully for small parts which may have come loose inside the carton during shipment. Separate, identify and count all parts and hardware. Compare with the parts list to be sure all parts are present.
"DO NOT TIGHTEN SCREWS UNTIL COMPLETELY ASSEMBLED"

*** Use of power tool to assemble this product will invalidate any claim and damage this product making unsafe !!!**
*** Please assemble on a clean soft surface to avoid damage.**

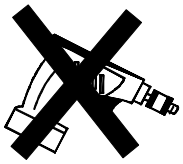

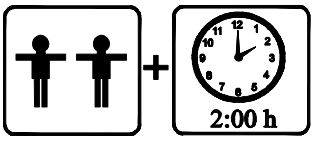

Tools Required

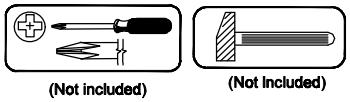

(Not included) (Not included)

IMPORTANT:
PLEASE READ INSTRUCTION BEFORE STARTING THE ASSEMBLY

Before Installation

Important – Please read these instructions fully before starting assembly

Thank you for purchasing this quality product. Be sure to check all packing materials carefully for small parts, which may have come loose inside the carton during shipment. Identify and count all items according to the PARTS LIST and/or HARDWARE LIST shown below. Check you have all the components and tools listed on the following pages.

- We recommend that you assemble this product with the assistance of another person; this will make the assembly easier, and will help eliminate damage to the product or injury to persons during assembly.
- Please do not over tighten screws or bolts until the assembly is completed.
- Keep children and animal away from the work area, small parts could choke if swallowed.
- Please put all parts on a non-abrasive floor before assembly,and follow the assembly steps to assemble your newly purchased product correctly and efficently.

Cam Lock Assembly Instructions

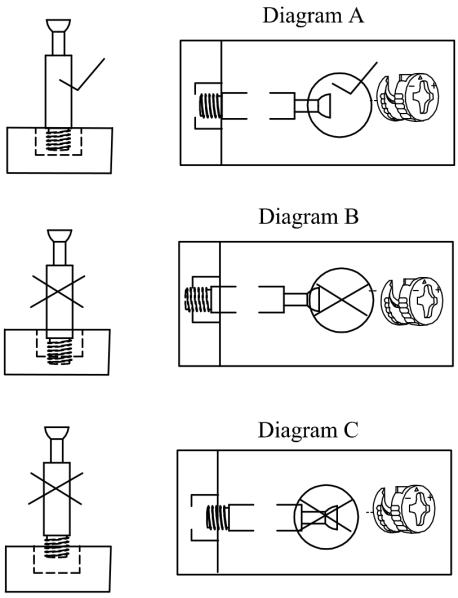

Insert Cam Bolt into hole as shown in diagram A.

Make sure not to insert the Cam Bolt:
Too deep as shown in figure B as this will cause the Cam Lock to be misaligned and unable to interlock properly.

Also avoid inserting the Cam Bolt too close to the surface of the hole as shown in figure C, as this will cause the Cam Lock to be too loose, and not interlock properly.

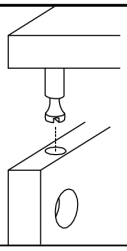

Connect the panels together.

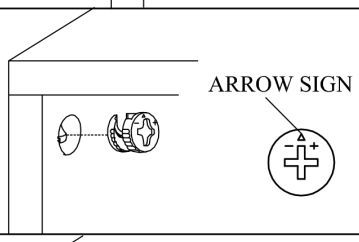

Insert the Cam Lock so the side opening fits over the head of the Cam Bolt.

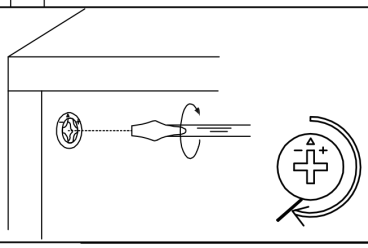

To tighten the Cam Lock, turn it clockwise on half a turn with a flat screwdriver.
**Do not use an automatic screwdriver as it may bend or break if too much power is imposed.*

Before installing the slide, separate the cabinet member and the drawer member.

Pay attention when connecting !
The sliding module must be at the front end.

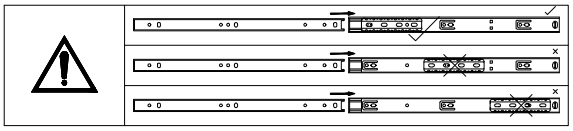

STEP 1 : Extend Slide

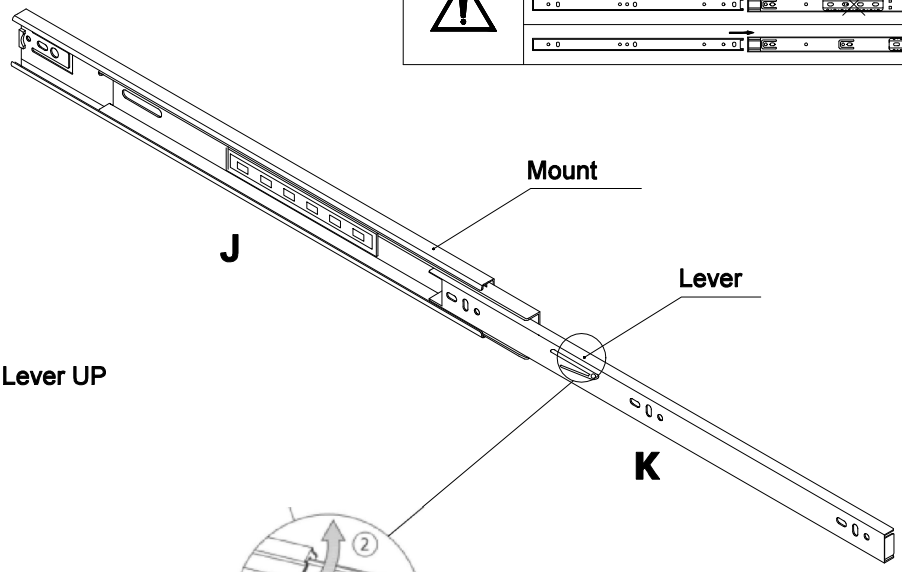

STEP 2: Push Lever UP

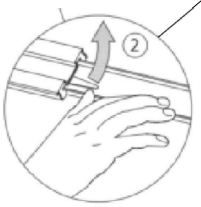

Push lever for the left of drawer ,
press the lever for the right of drawer.

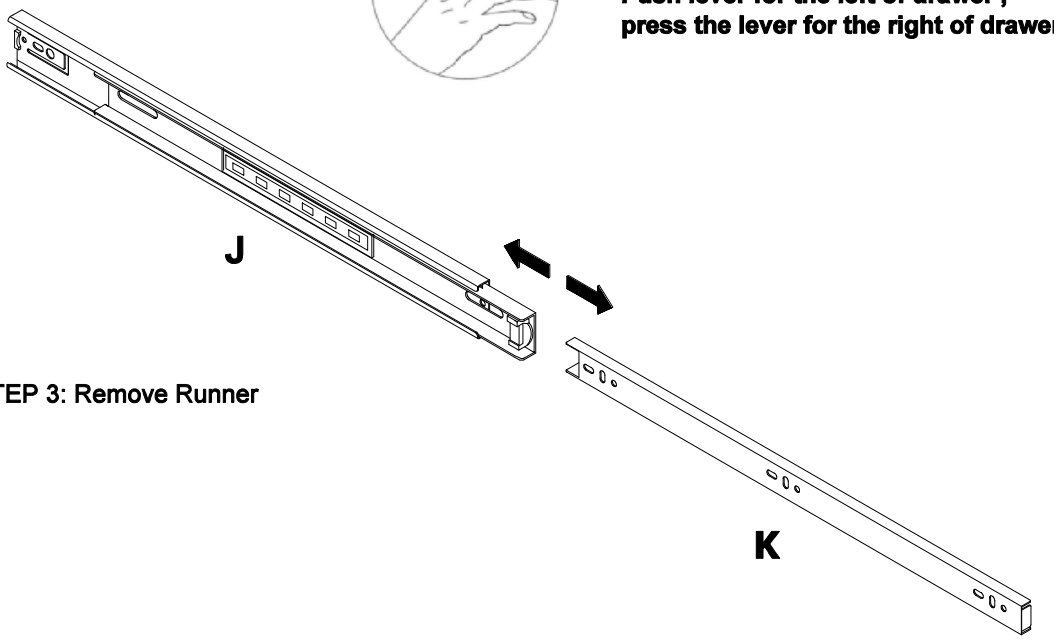

STEP 3: Remove Runner

Detail View - CABINET

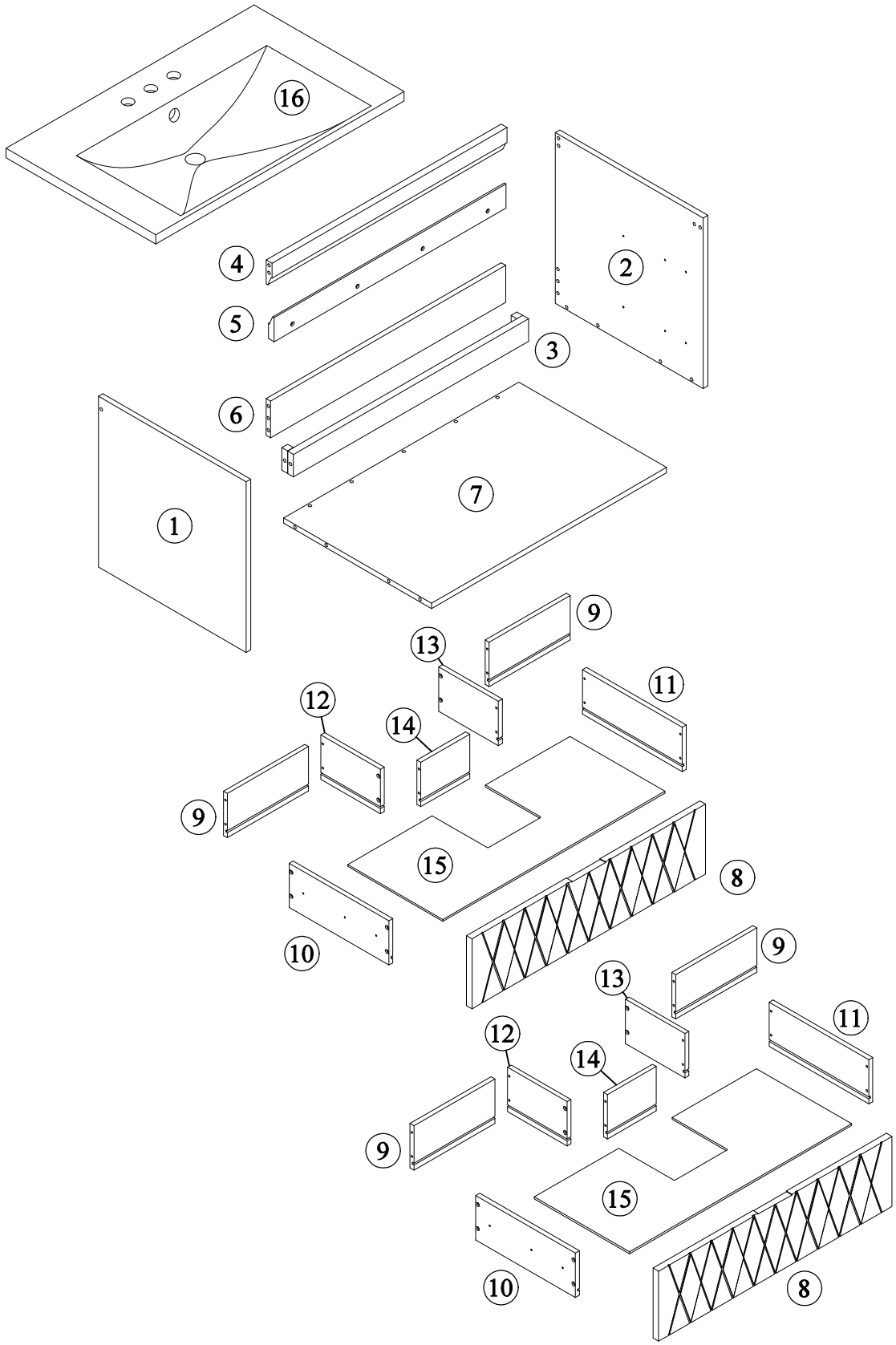

Identifying the Hardware-Identify the hardware using the illustrations below.

Part List - WF316723

1 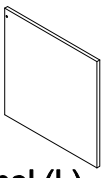 Side Panel (L) - 1pc	2 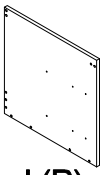 Side Panel (R) - 1pc
3 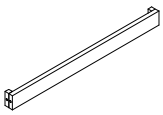 Top Crossbar Front - 1pc	4 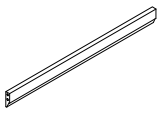 Top Crossbar Rear - 1pc
5 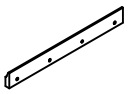 Connect Bar - 1pc	6 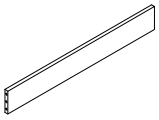 Bottom Panel Rear - 1pc
7 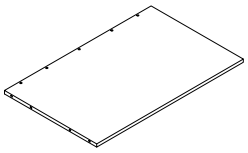 Bottom Panel - 1pc	8 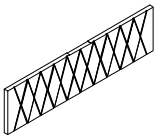 Top Drawer Face - 2pcs
9 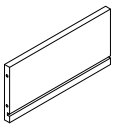 Drawer Rear - 4pcs	10 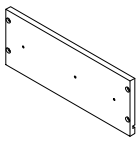 Drawer Panel Side (L) - 2pcs
11 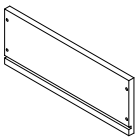 Drawer Panel Side (R) - 2pcs	12 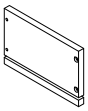 Mid Drawer Side (L) - 2pcs
13 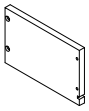 Mid Drawer Side (R) - 2pcs	14 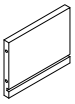 Mid Drawer Panel - 2pcs
15 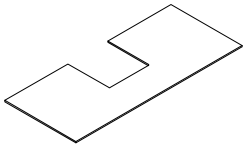 Bottom Drawer Panel - 2pcs	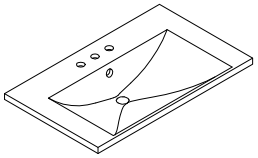 Sink - 1pc

Hardware List - WF316723

A ø13x1/4"x28mm Hex-Head bolts (2pcs)	B ø13x1/4"x50mm Hex-Head bolts (2pcs)	C ø1/4"x16x1mm Washer (2pcs)
D ø10x13mm Horizontal-Hole bolts(2pcs)	E ø6x35mm Three in one bolts (11pcs)	F ø14.5x12mm Three in one lock (11pcs)
G ø8xø4x32mm Round head screw (32pcs)	H Handle (2pcs)	I ø7xø3.5x12mm Flat head screw(6pcs)
J ø300x35mm Slide rails (4pcs)	K ø298x18mm Slide rails (4pcs)	L ø6xø3x12mm Flat head screw (24pcs)
M ø8x30mm Wood dowel (12pcs)	N ø10xø5x50mm Flat head screw - 4pcs	O ø12x55mm Plastic stopper - 4pcs
P 4mm Allen key (1pc)		

STEP: 1

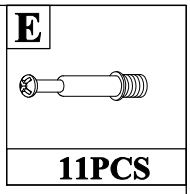
E
11PCS

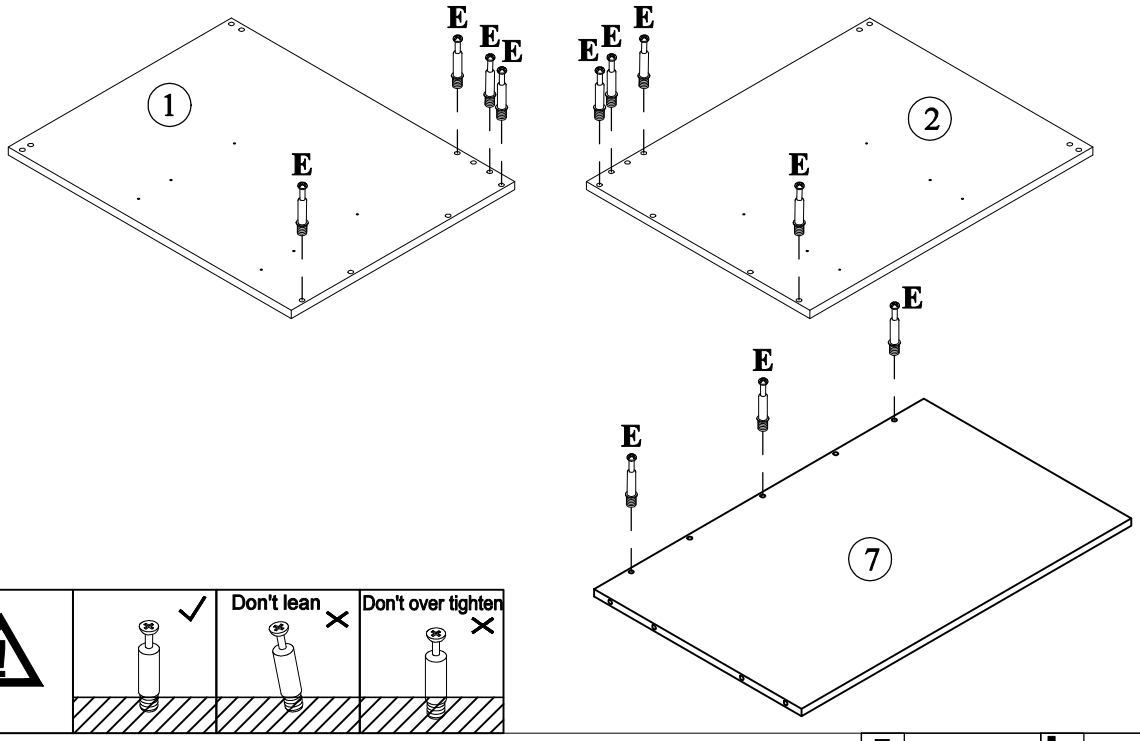
E
1
2
7

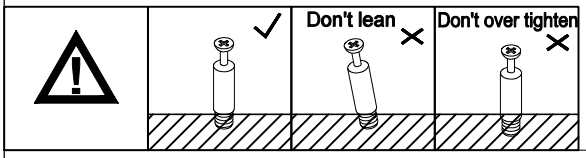
Don't lean
Don't over tighten

STEP: 2

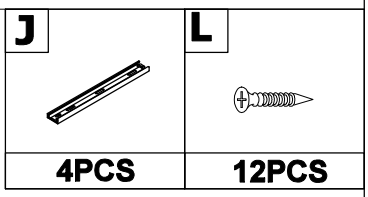
J
L
4PCS
12PCS

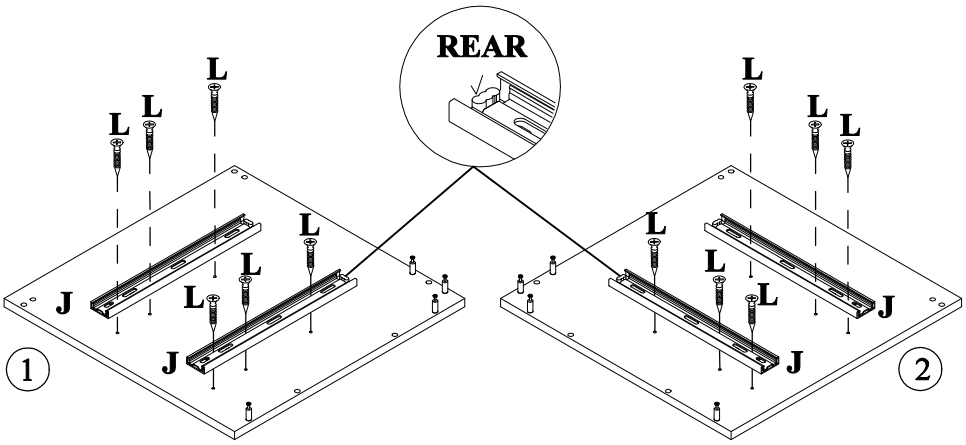
REAR
L
J
1
2

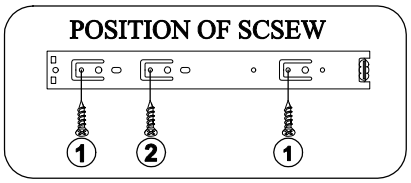
POSITION OF SCSEW
1
2
1

STEP: 3

F	M
3PCS	2PCS

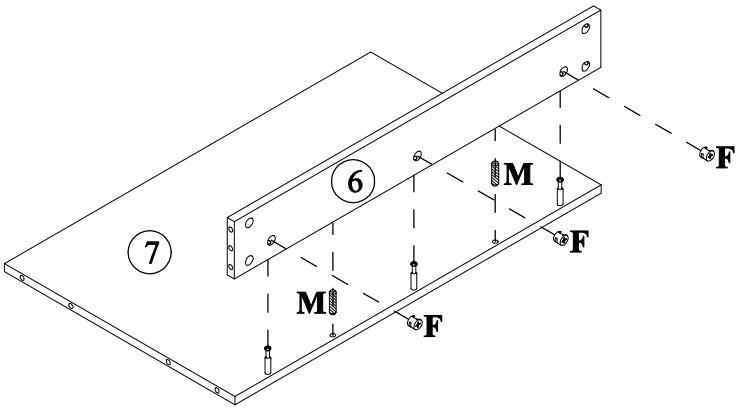

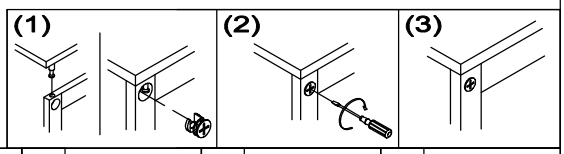

STEP: 4

A	B	C	D	M
1PC	1PC	1PC	1PC	2PCS

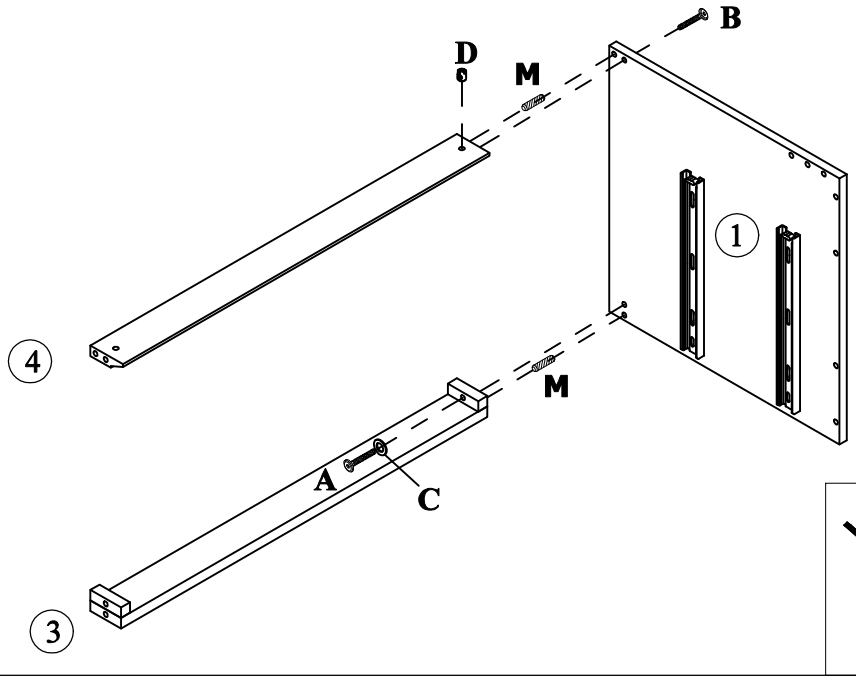

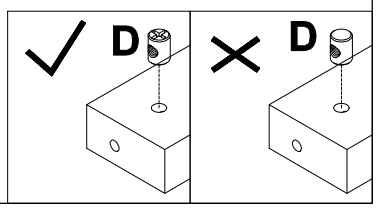

STEP: 5

F	M
4PCS	3PCS

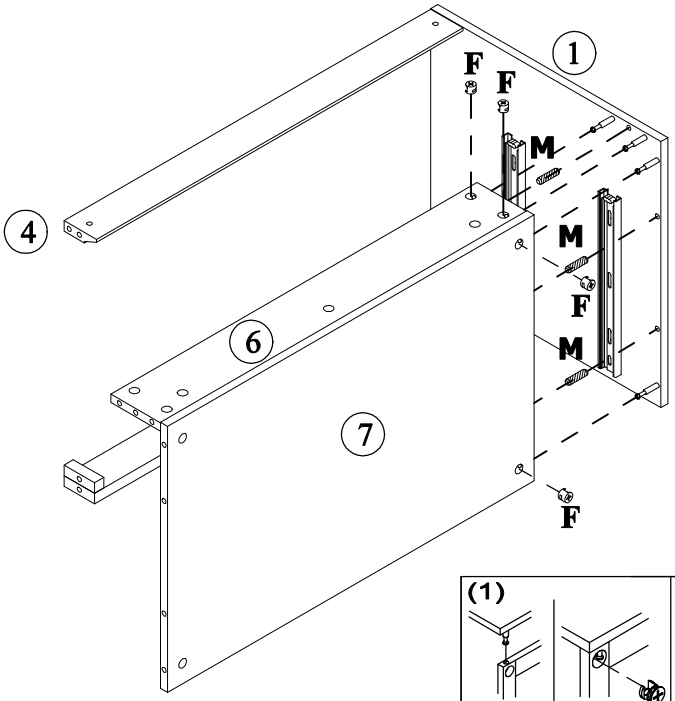

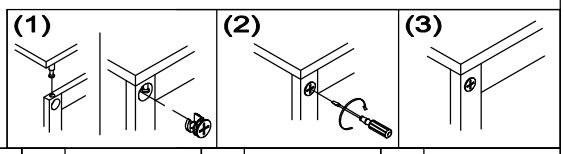

STEP: 6

A	B	C	D	F	M
1PC	1PC	1PC	1PC	4PCS	5PCS

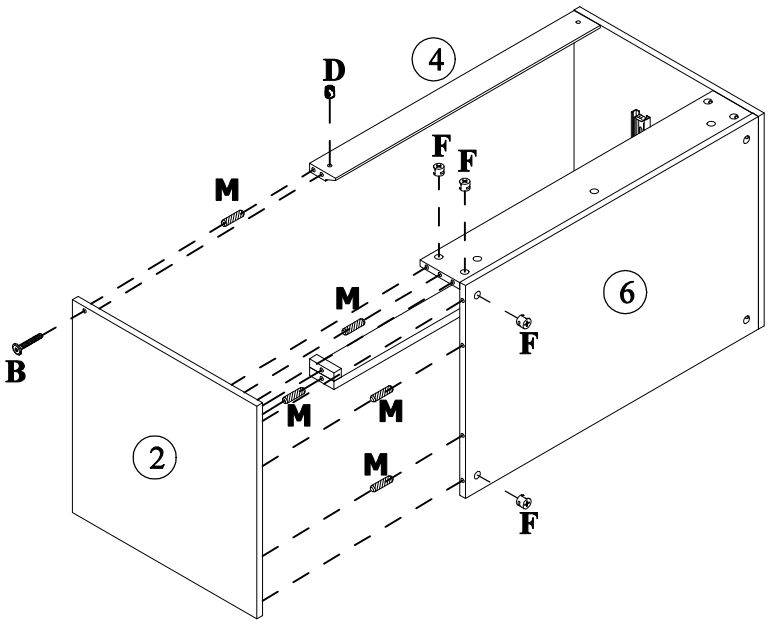

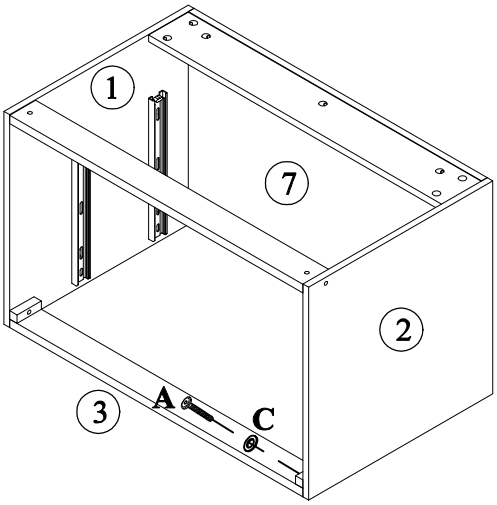

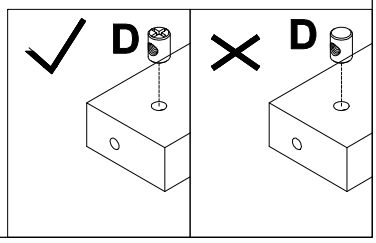

STEP: 7

N	O
4PCS	4PCS

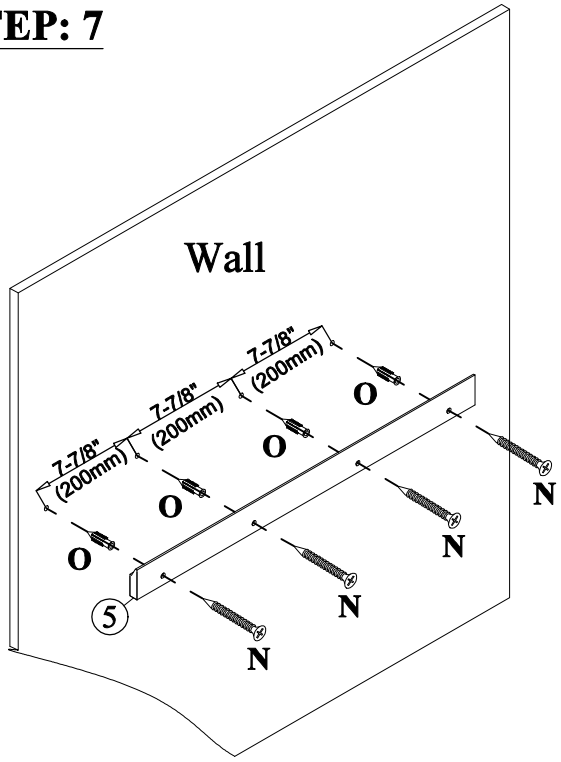

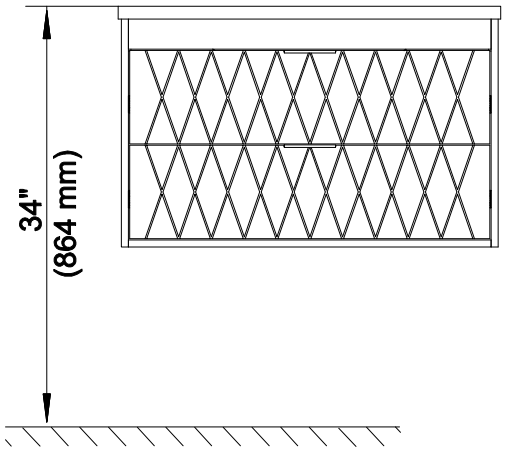

Draw the spacing between the walls and the No.5, punch holes in the wall, and fix the No.5 to the wall with screws.
Note: Appropriate distance from the top of sink to the ground is 34".

STEP: 8

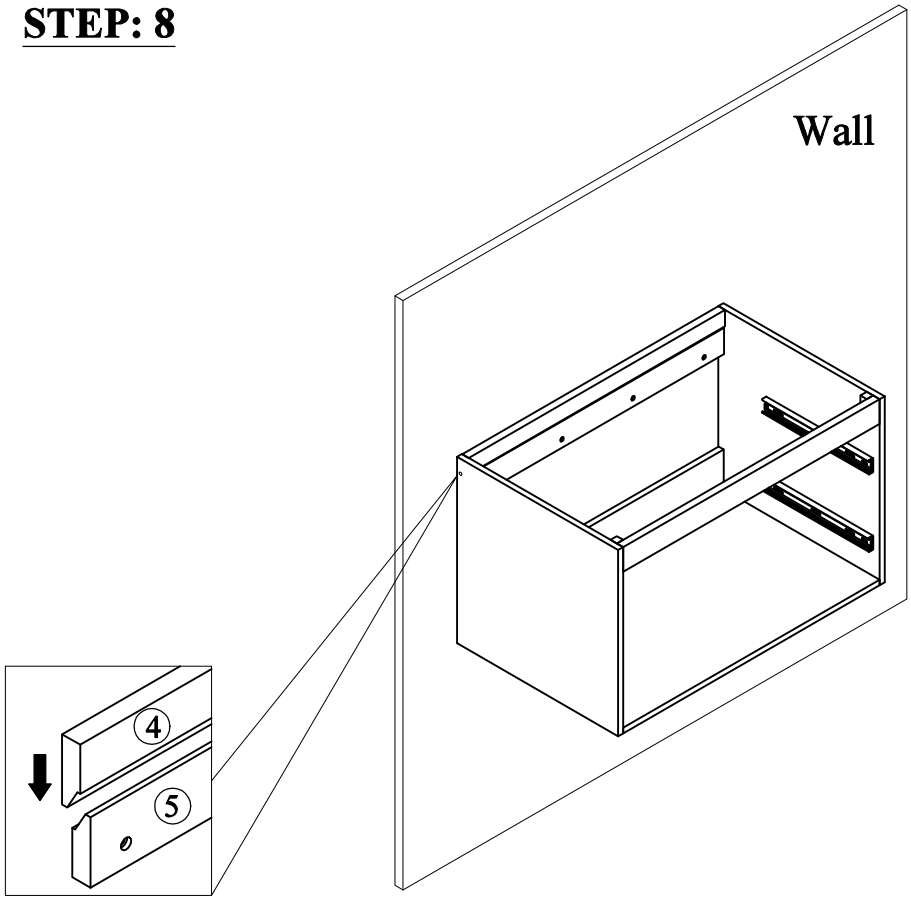

STEP: 9

G	H	I	K	L
32PCS	2PCS	6PCS	4PCS	12PCS

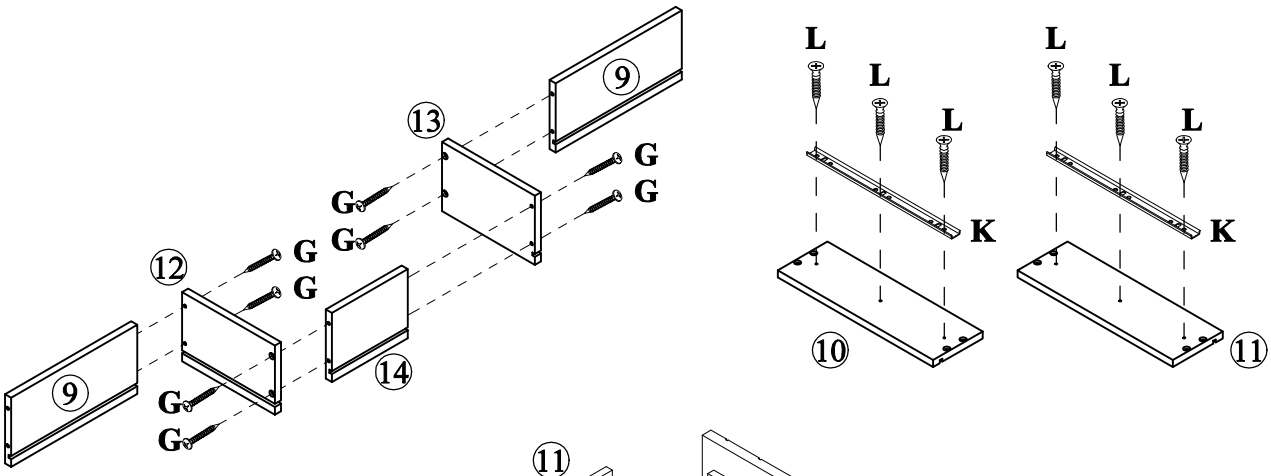

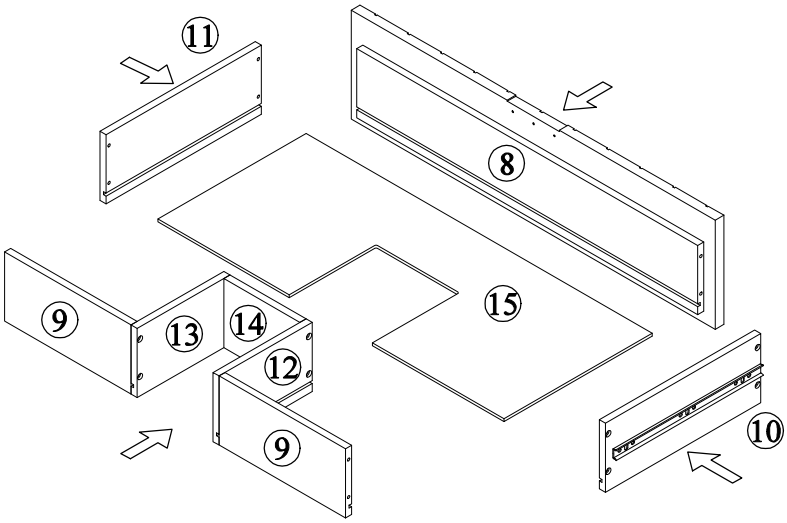

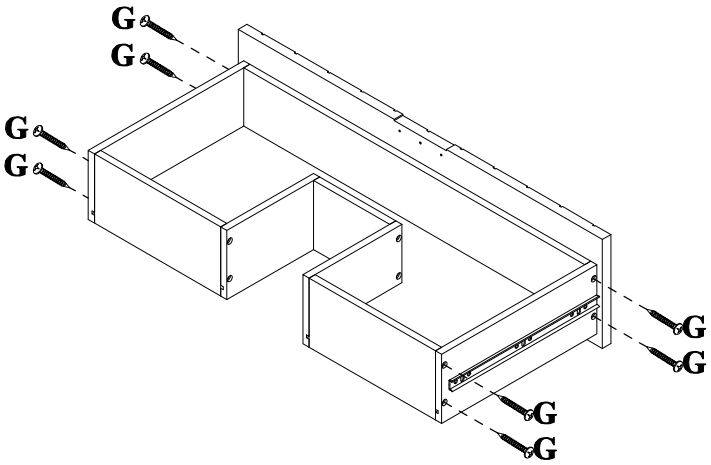

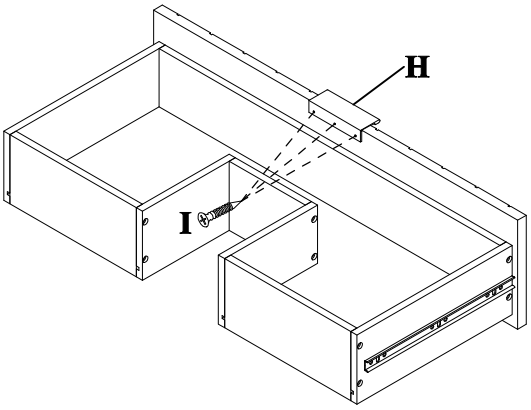

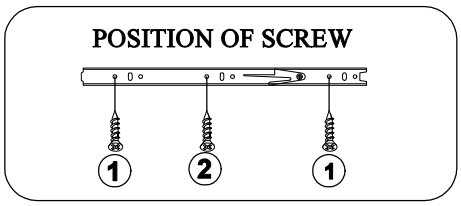

x2

STEP: 10

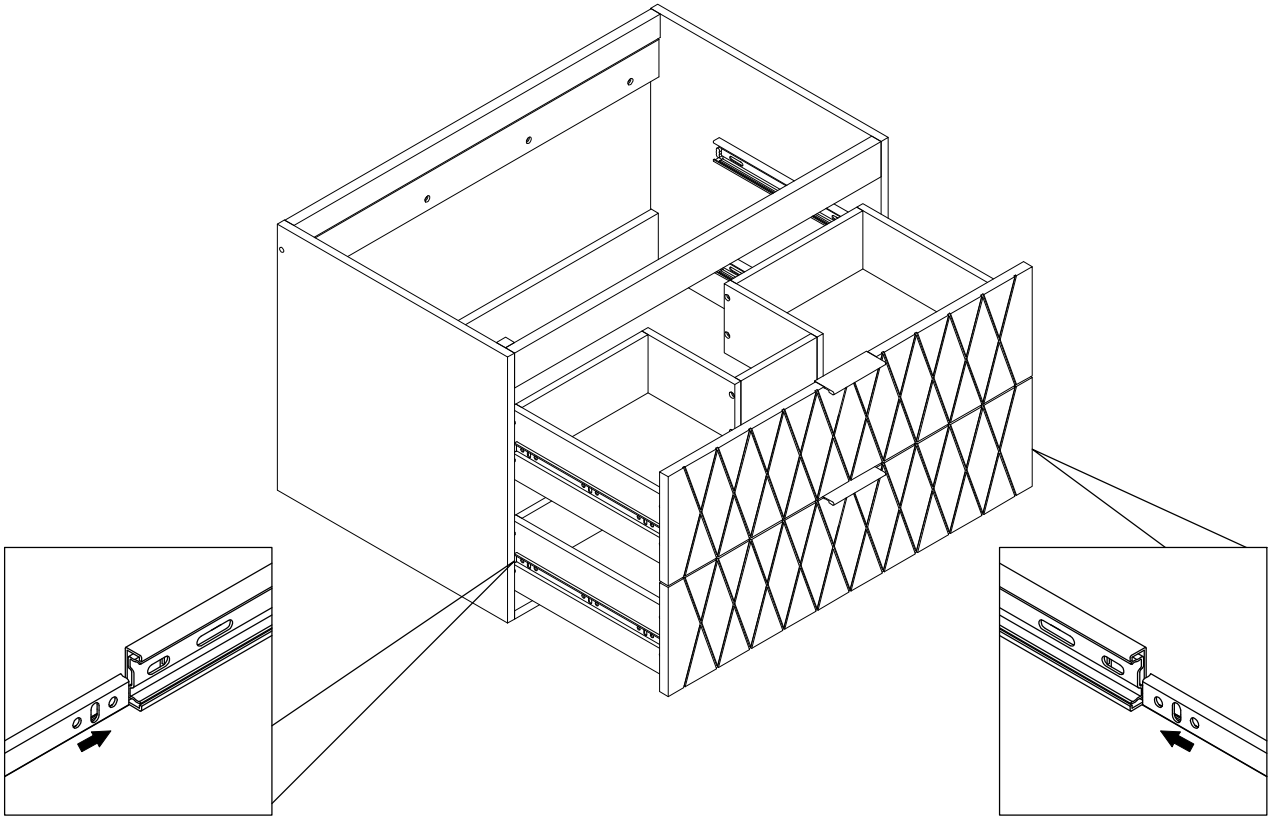

STEP: 11

Install the sink on the cabinet with glue.
Let stand for 24 hours

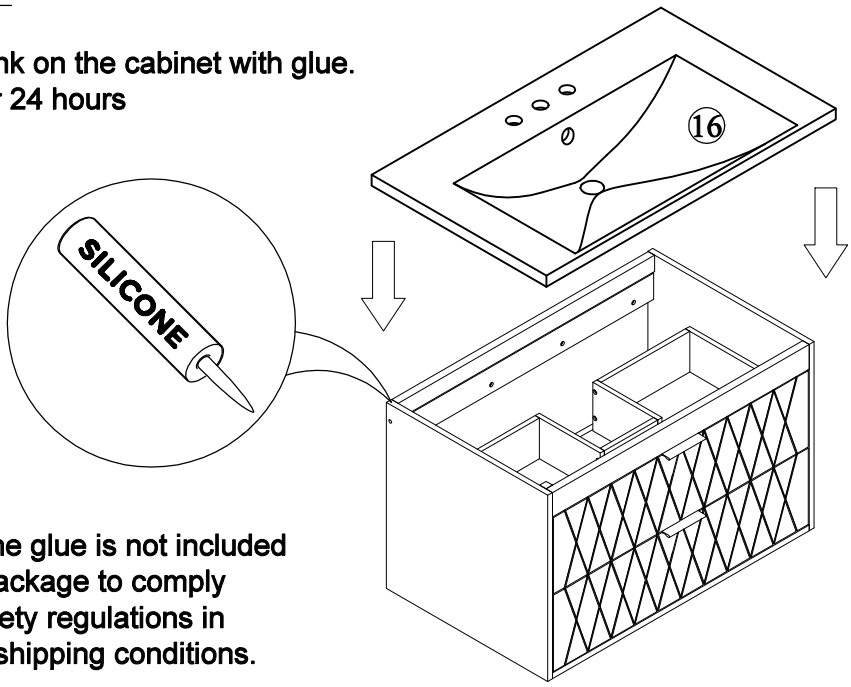

*Silicone glue is not included in the package to comply with safety regulations in certain shipping conditions.

STEP: 12

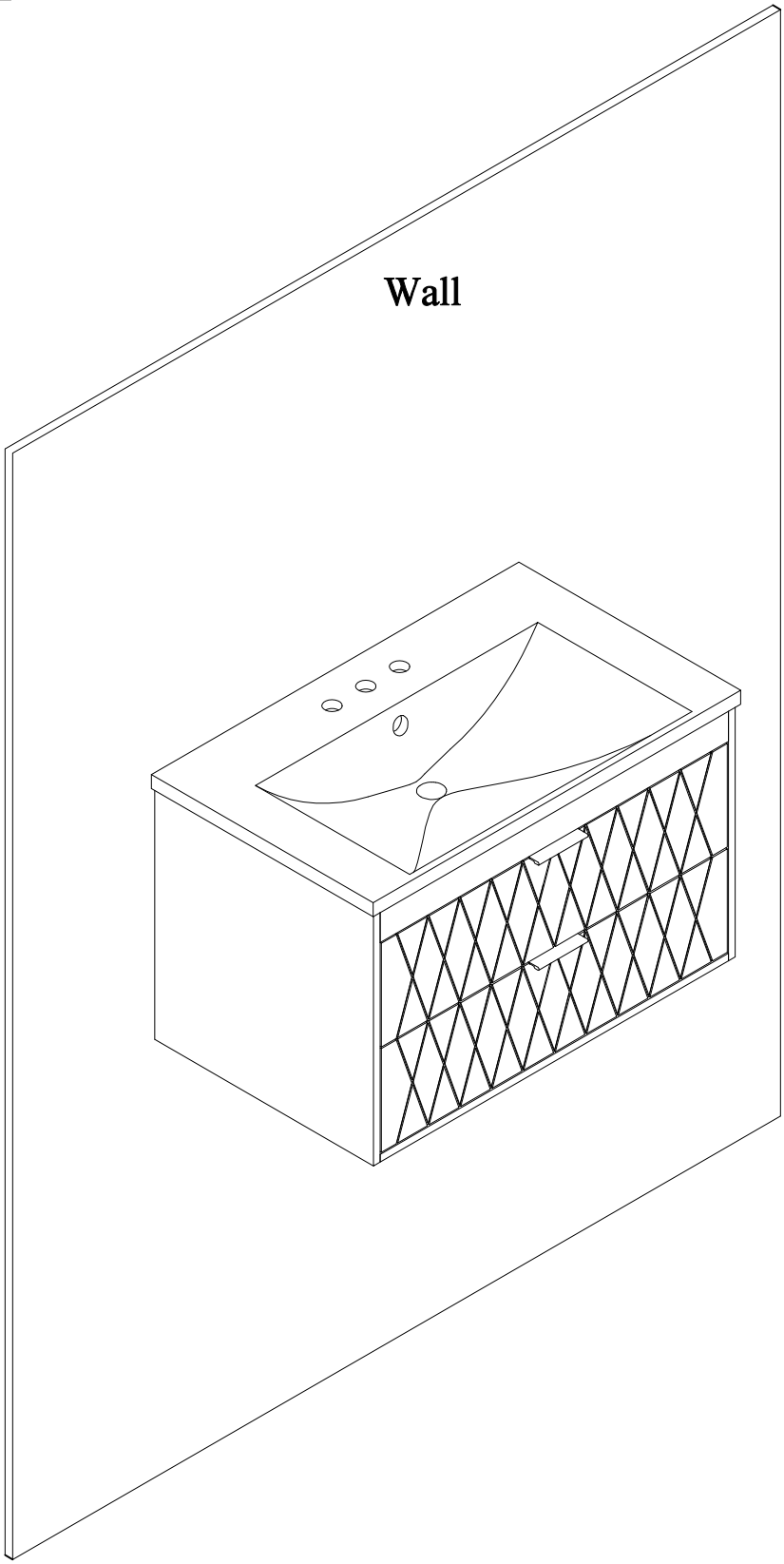

HINGE ADJUSTMENTS

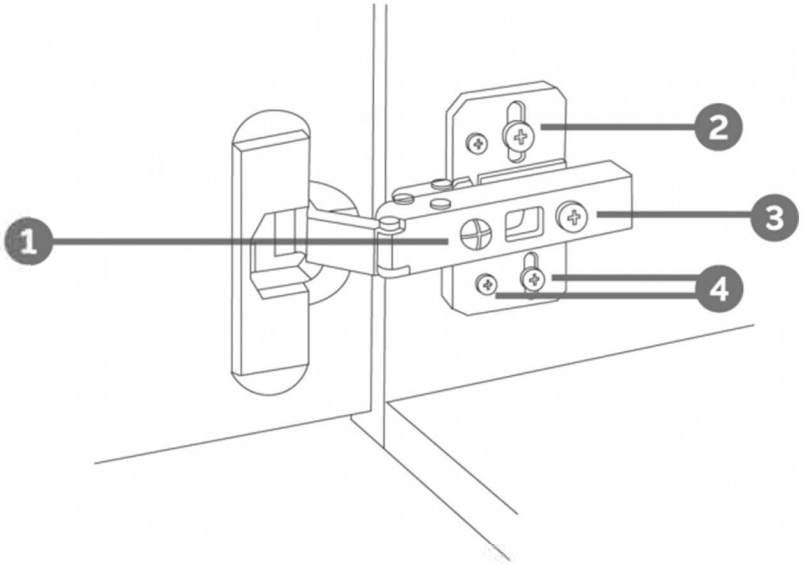

1 Sideways / Tilt adjustment

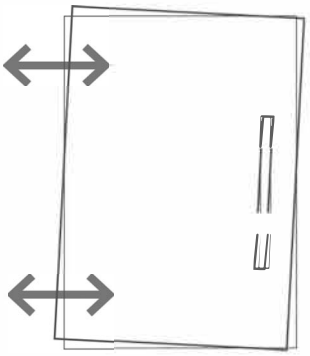

Turn the screw
clockwise to move the door further away from the side of the cabinet
anticlockwise to move the door closer to the side of the cabinet

2 4 Height adjustment

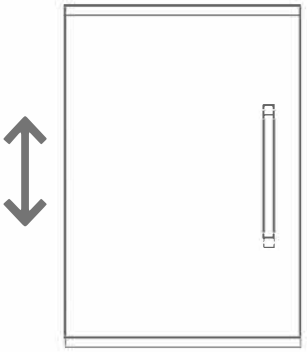

While supporting the weight of the door, turn the screws
clockwise to move the door up
anticlockwise to move the door down

3 Forward and back adjustment

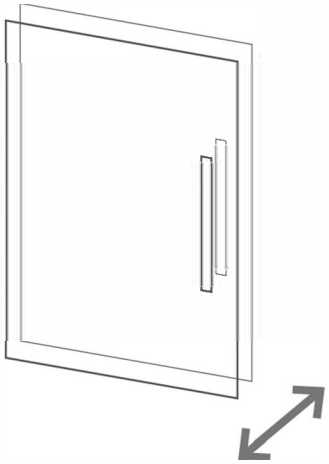

If the gap between the back of the door and the cabinet is too small, and the door may not close fully. Turn the screw
clockwise to decrease the gap between the door and the cabinet
anticlockwise to increase the gap between the door and the cabinet