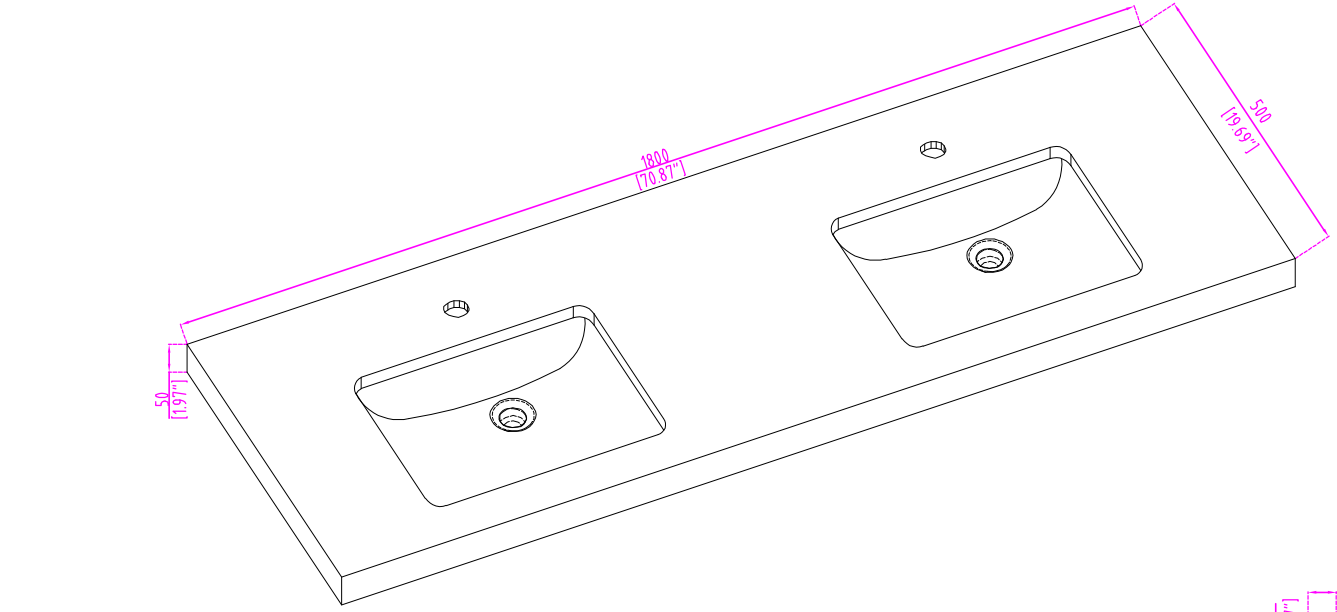
1800
[70.87"]
500
[19.69"]
50
[1.97"]

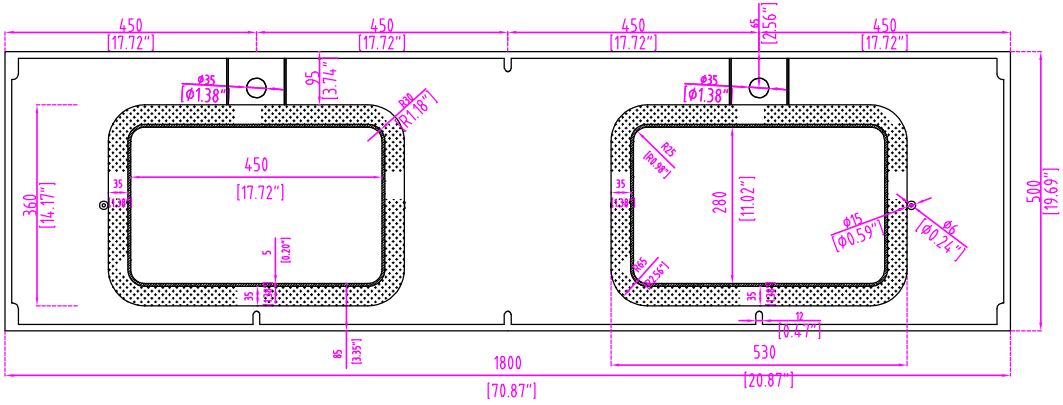
450
[17.72"]
450
[17.72"]
450
[17.72"]
65
[2.56"]
450
[17.72"]
Ø35
Ø1.38"
95
[3.74"]
R30
[R1.18"]
450
[17.72"]
360
[14.17"]
35
[1.38"]
5
[0.20"]
35
[1.38"]
R25
[R0.98"]
280
[11.02"]
Ø15
[Ø0.59"]
Ø6
[Ø0.24"]
R15
[R0.59"]
500
[19.69"]
12
[0.47"]
85
[3.35"]
1800
[70.87"]
530
[20.87"]

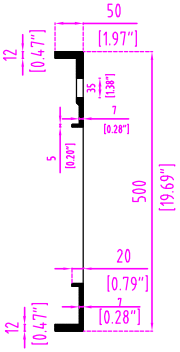
50
[1.97"]
12
[0.47"]
35
[1.38"]
7
[0.28"]
5
[0.20"]
500
[19.69"]
20
[0.79"]
7
[0.28"]
12
[0.47"]

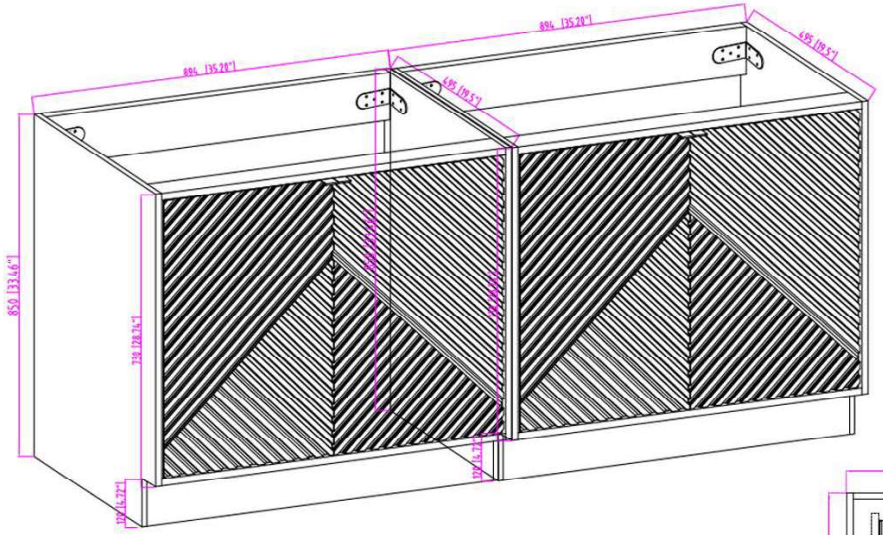
894 [35.20"]
894 [35.20"]
495 [19.5"]
495 [19.5"]
850 [33.46"]
728 [28.7"]
120 [4.72"]

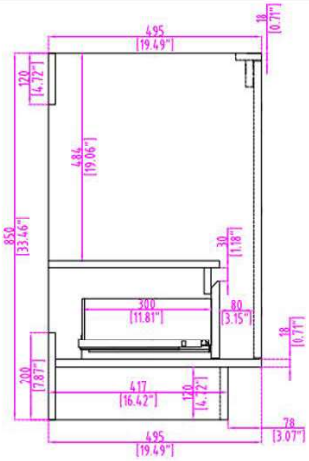
495 [19.49"]
18 [0.71"]
120 [4.72"]
484 [19.06"]
850 [33.46"]
30 [1.18"]
300 [11.81"]
80 [3.15"]
18 [0.71"]
200 [7.87"]
417 [16.42"]
120 [4.72"]
78 [3.07"]
495 [19.49"]

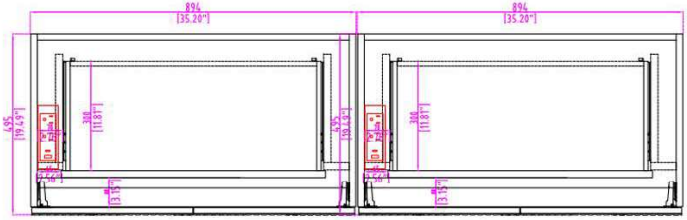
894 [35.20"]
894 [35.20"]
495 [19.49"]
300 [11.81"]
495 [19.49"]
300 [11.81"]
80 [3.15"]
80 [3.15"]

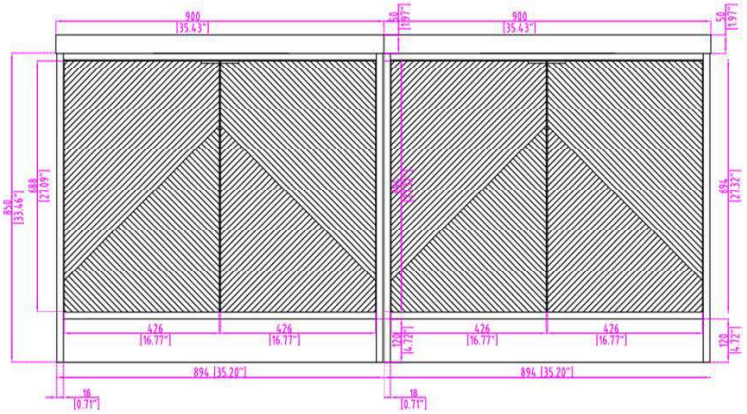
900 [35.43"]
50 [1.97"]
900 [35.43"]
50 [1.97"]
850 [33.46"]
688 [27.09"]
694 [27.32"]
426 [16.77"]
426 [16.77"]
426 [16.77"]
426 [16.77"]
120 [4.72"]
120 [4.72"]
894 [35.20"]
894 [35.20"]
18 [0.71"]
18 [0.71"]

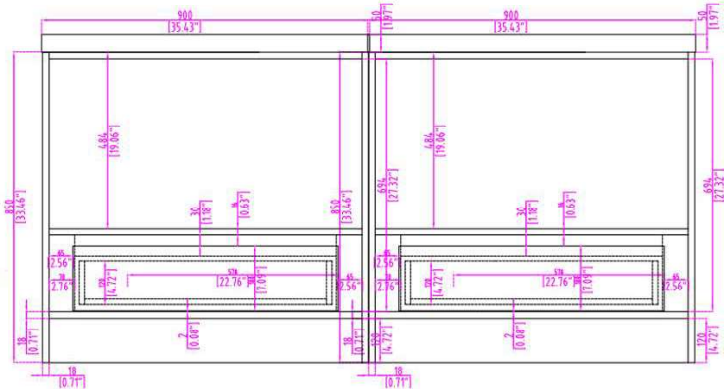
900 [35.43"]
50 [1.97"]
900 [35.43"]
50 [1.97"]
484 [19.06"]
484 [19.06"]
850 [33.46"]
850 [33.46"]
694 [27.32"]
694 [27.32"]
36 [1.18"]
36 [1.18"]
578 [22.76"]
578 [22.76"]
120 [4.72"]
120 [4.72"]
18 [0.71"]
18 [0.71"]
18 [0.71"]
18 [0.71"]
120 [4.72"]