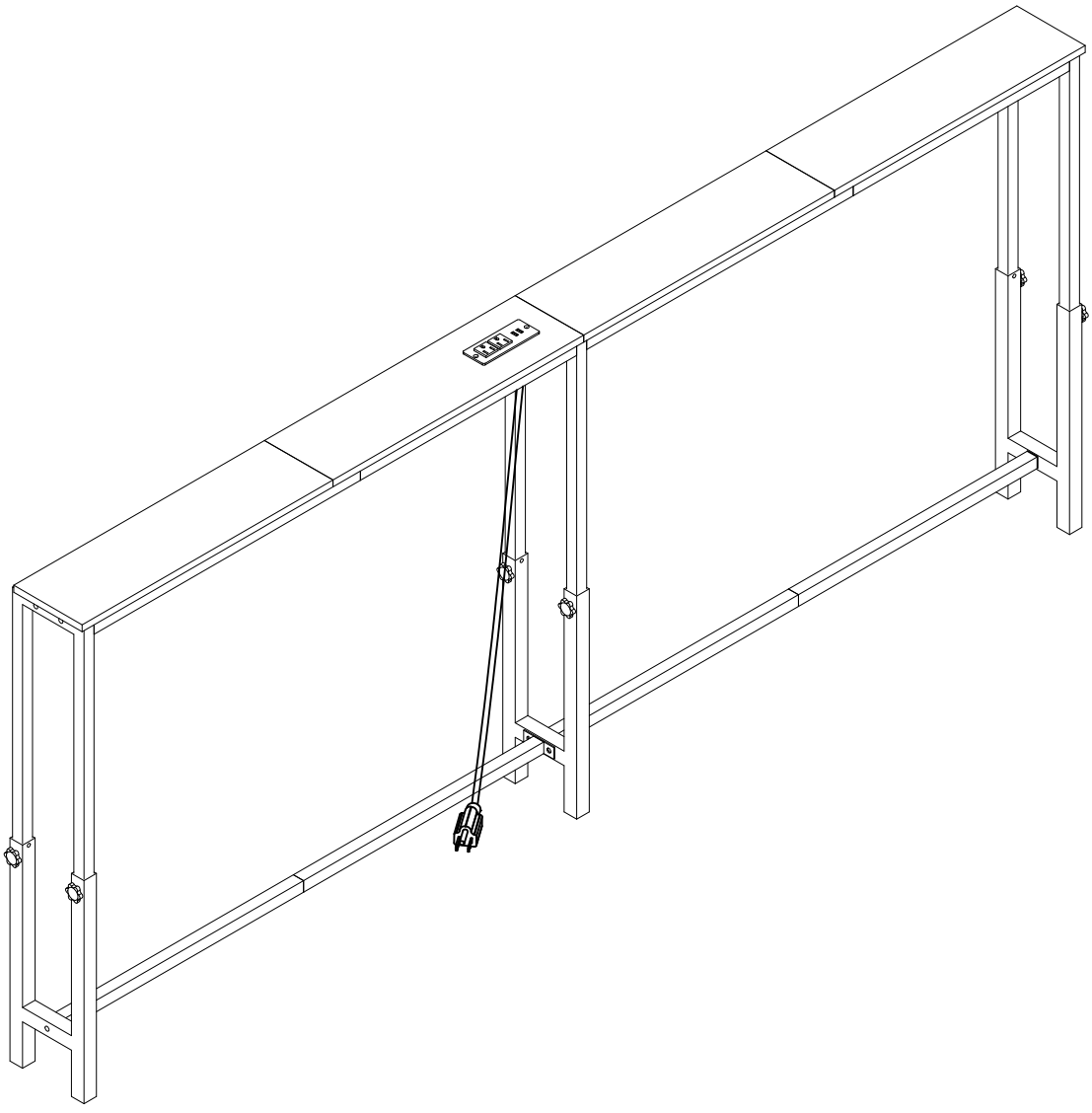

ST005

# ASSEMBLY INSTRUCTION

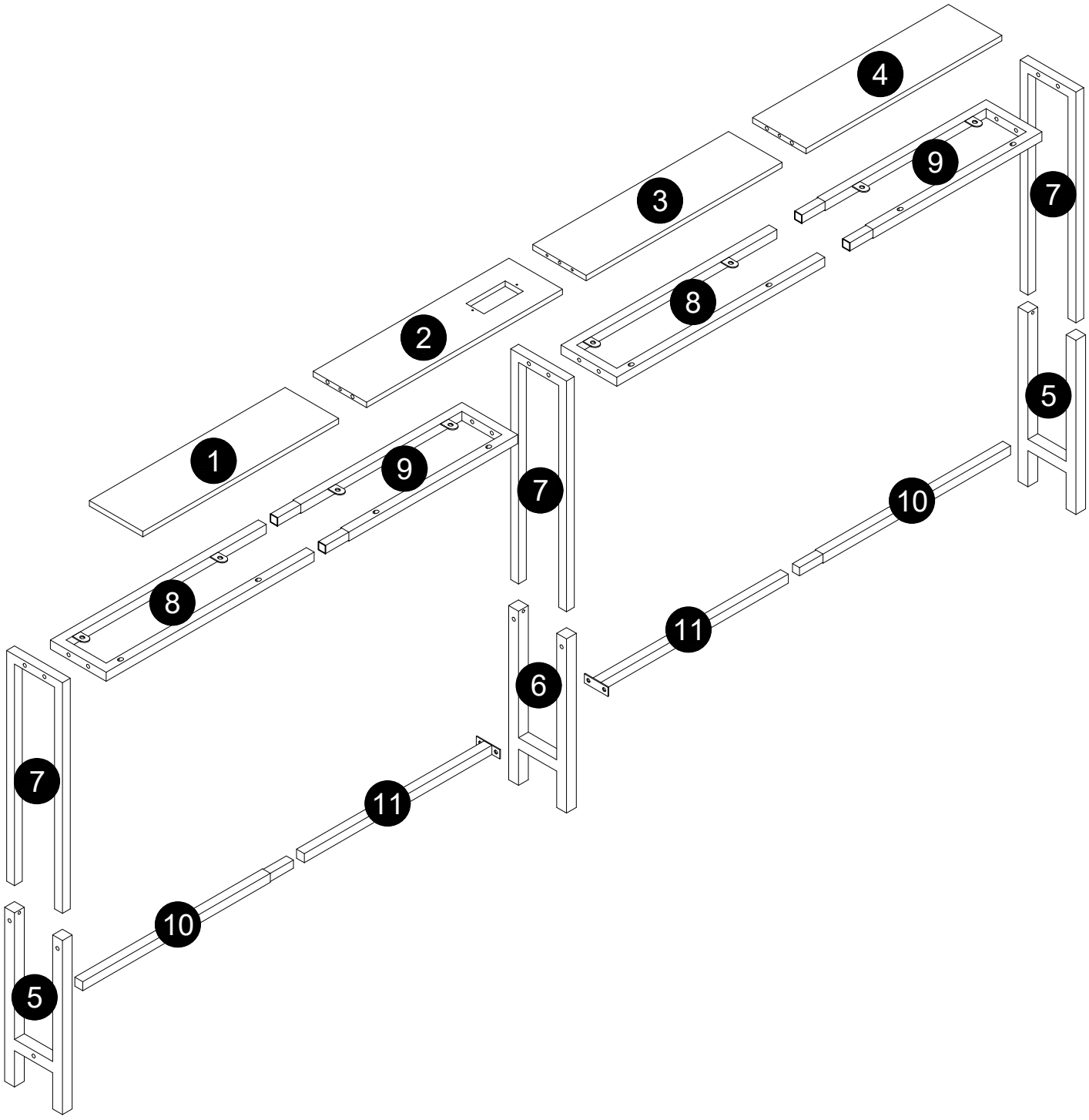

# ASSEMBLY INSTRUCTION

| | | | |
|---|---|---|---|
| ① 1PC 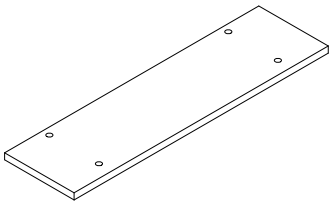 | ② 1PC 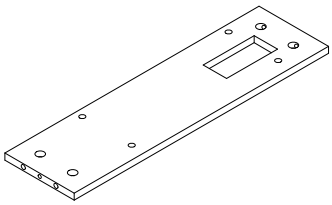 | ③ 1PC 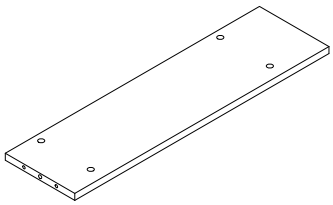 | ④ 1PC 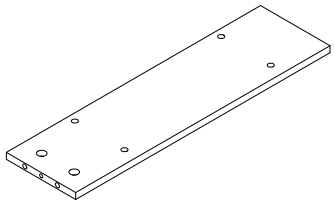 |
| ⑤ 2PCS 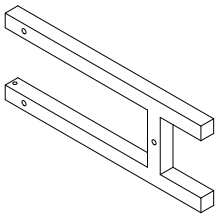 | ⑥ 1PC 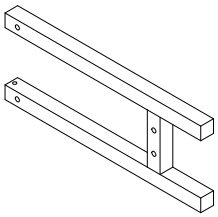 | ⑦ 3PCS 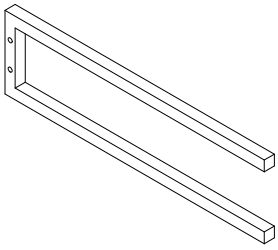 | ⑧ 2PCS 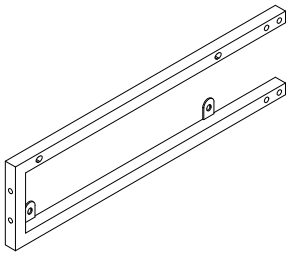 |
| ⑨ 2PCS 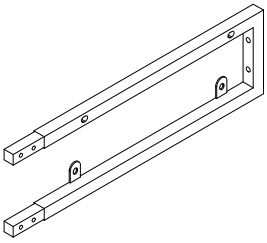 | ⑩ 2PCS 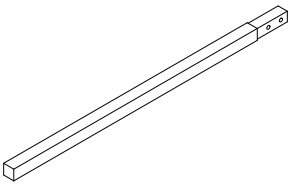 | ⑪ 2PCS 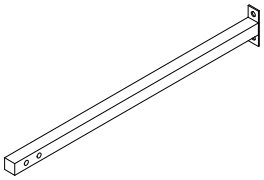 | |

# ASSEMBLY INSTRUCTION

| | | | | |
|---|---|---|---|---|
| A 6PCS  | B 6PCS  Ø15X10 | C 2PCS 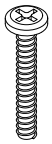 M6*40 | D 4PCS 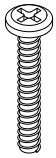 M6*45 | E 6PCS 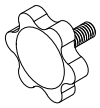 M6 |
| F 8PCS 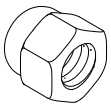 M6 | G 8PCS 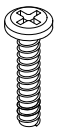 M6*28 | H 2PCS  M6*65 | J 3PCS 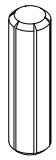 Ø6*30 | K 20PCS 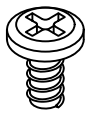 M6*10 |
| L 2PCS 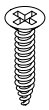 M3.5*12 | M 2PCS 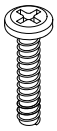 M6*35 | 1PC 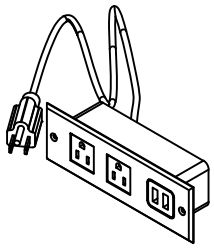 | 1PC 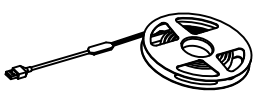 | 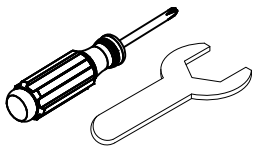 |

## STEP1

K 4PCS  M6*10

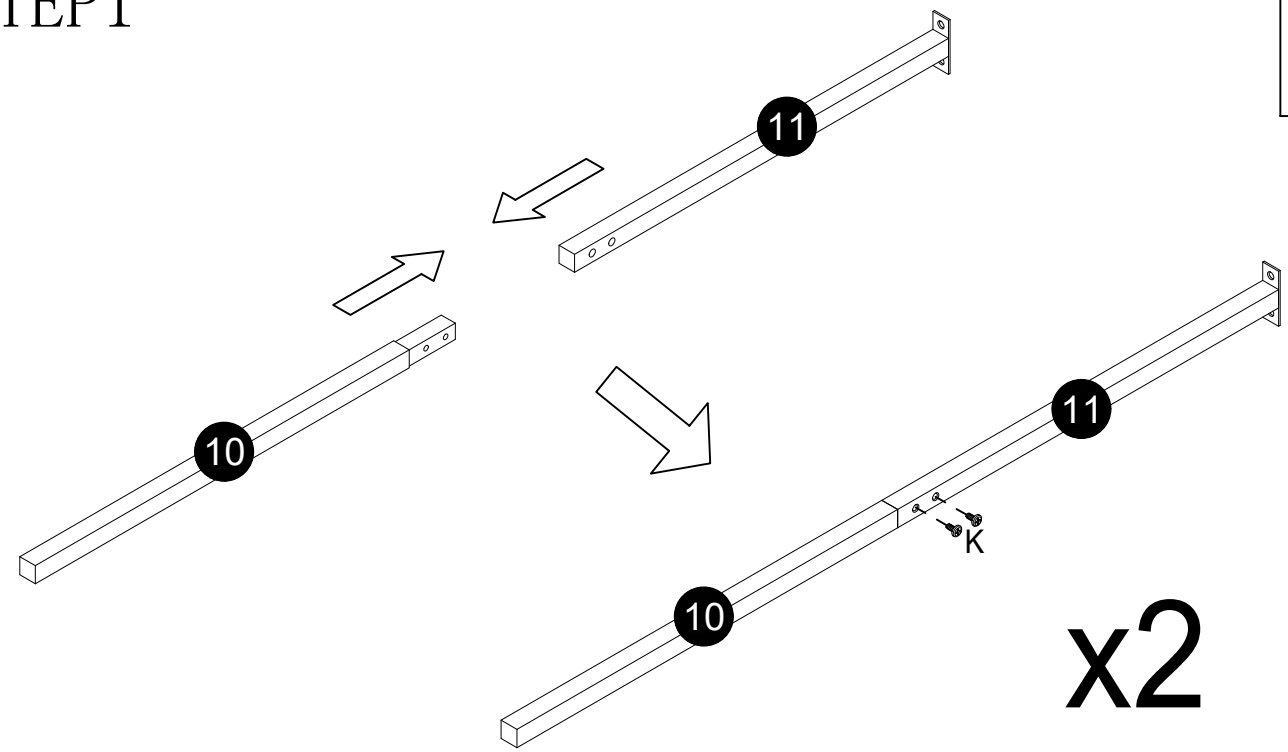


x2

# ASSEMBLY INSTRUCTION

## STEP2

E 6PCS

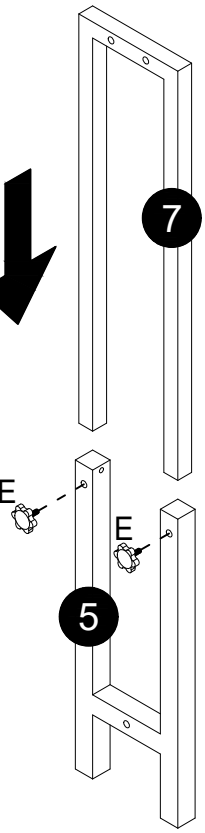





x2

After assembling the No. 5 and No. 6 iron frames, you need to adjust them to the required uniform height by yourself and then fix them in place

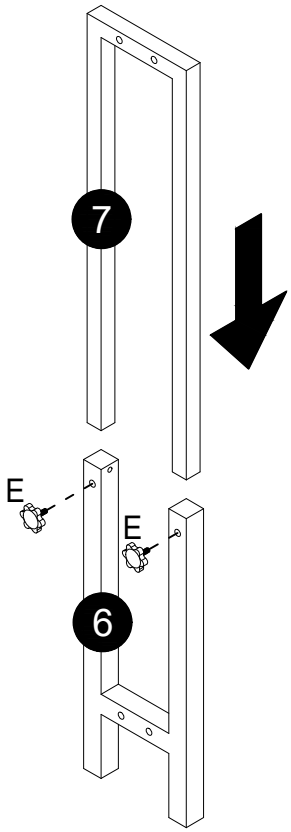


## STEP3

K 8PCS







x2

It is recommended that two people cooperate to install this step

# ASSEMBLY INSTRUCTION

## STEP4

| | |
|---|---|
| D 2PCS  M6*45 | C 1PC  M6*40 |
| 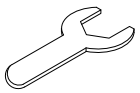 | F 2PCS  M6 |




When installing, pay attention to distinguishing the positions of the iron frame holes

## STEP5

| | |
|---|---|
| D 2PCS  M6*45 | C 1PC  M6*40 |
| 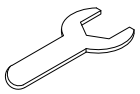 | F 2PCS  M6 |

When installing, pay attention to distinguishing the positions of the iron frame holes

# ASSEMBLY INSTRUCTION

## STEP6

| | |
|---|---|
| M 2PCS  M6*35 | F 4PCS  M6 |
| 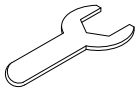 | H 2PCS  M6*65 |

It is recommended
that two people
cooperate to install
this step

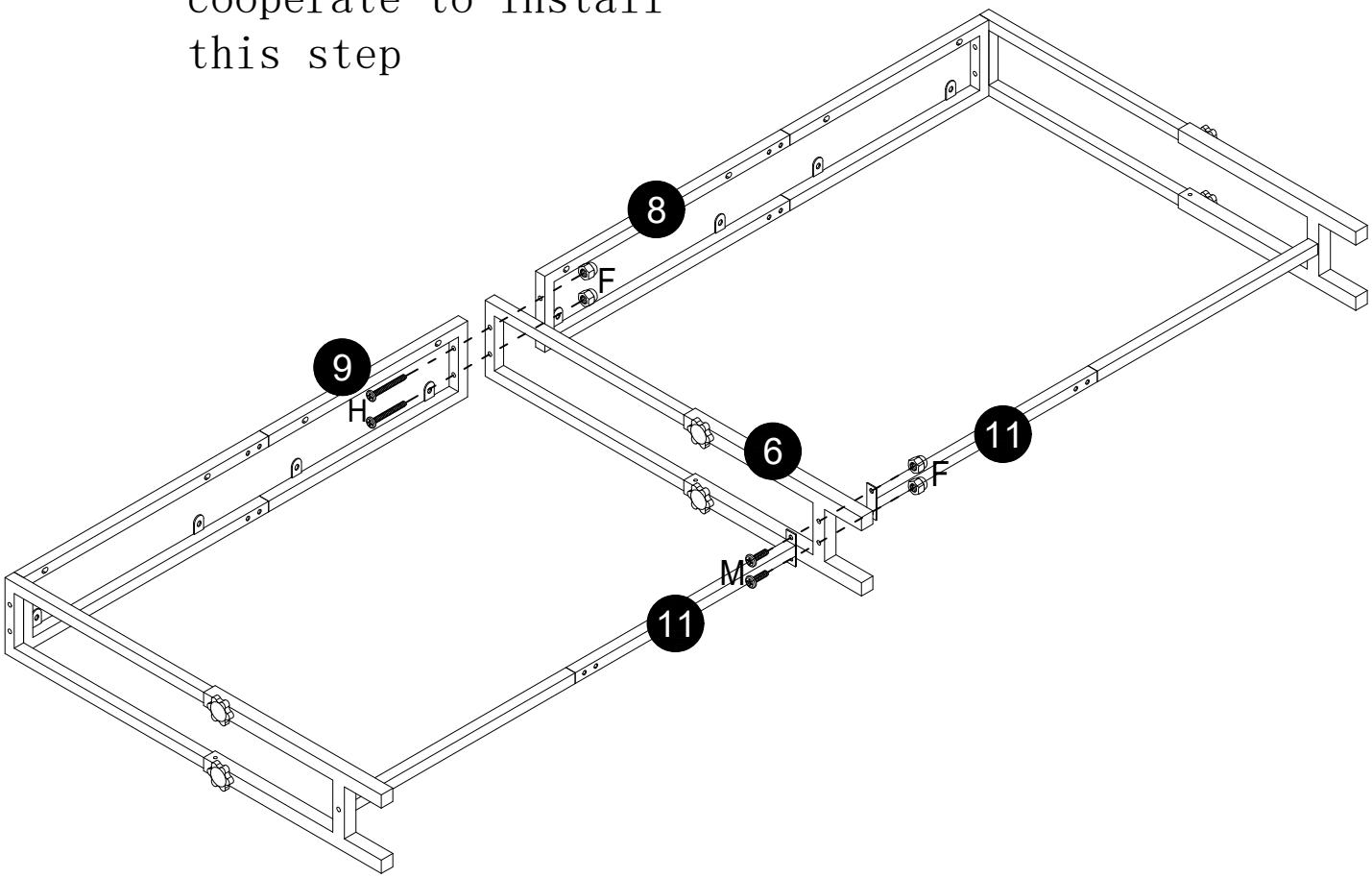

# ASSEMBLY INSTRUCTION

## STEP7

| | |
|---|---|
| A | 2PCS |
| J | 1PC |

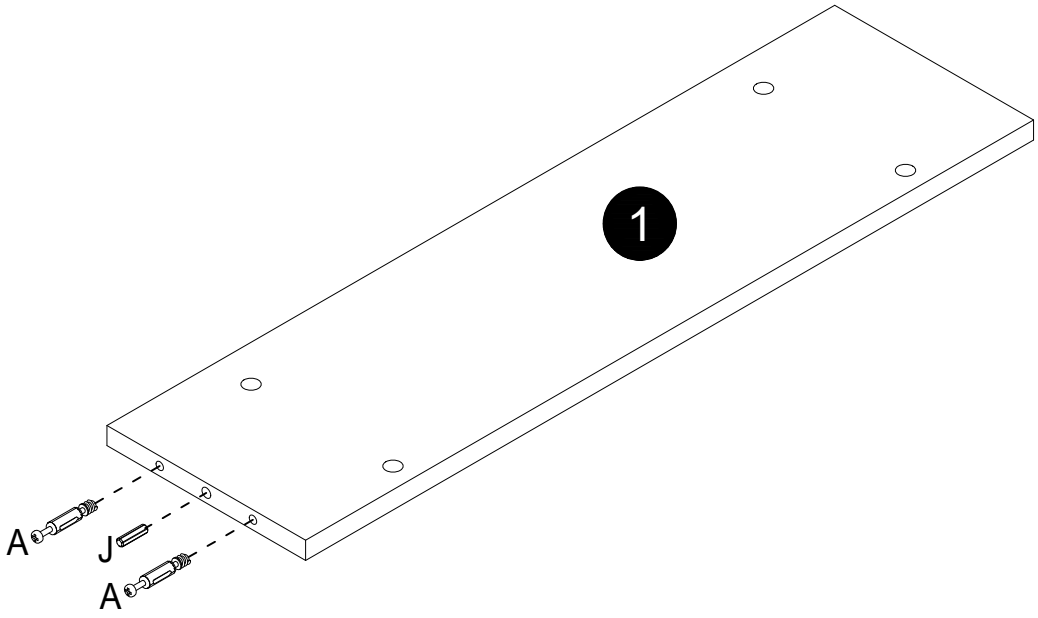


## STEP8

| | |
|---|---|
| B | 2PCS |

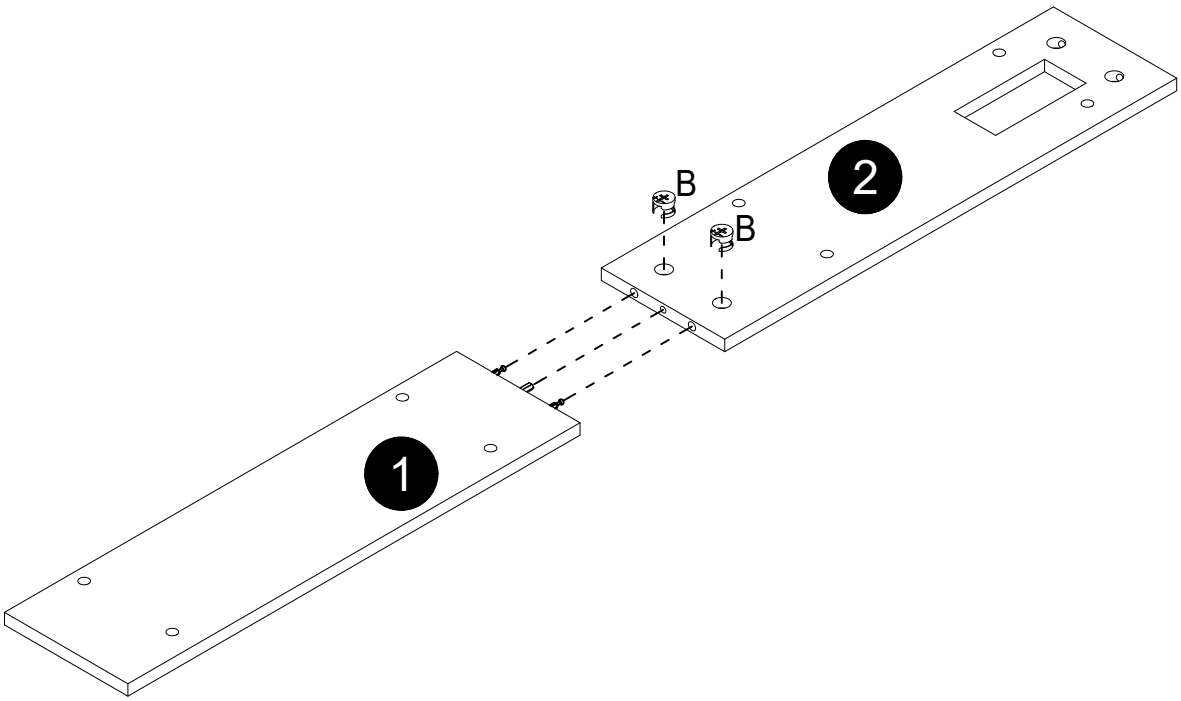

# ASSEMBLY INSTRUCTION

## STEP9

| A | 4PCS |
|---|---|



| J | 2PCS |
|---|---|



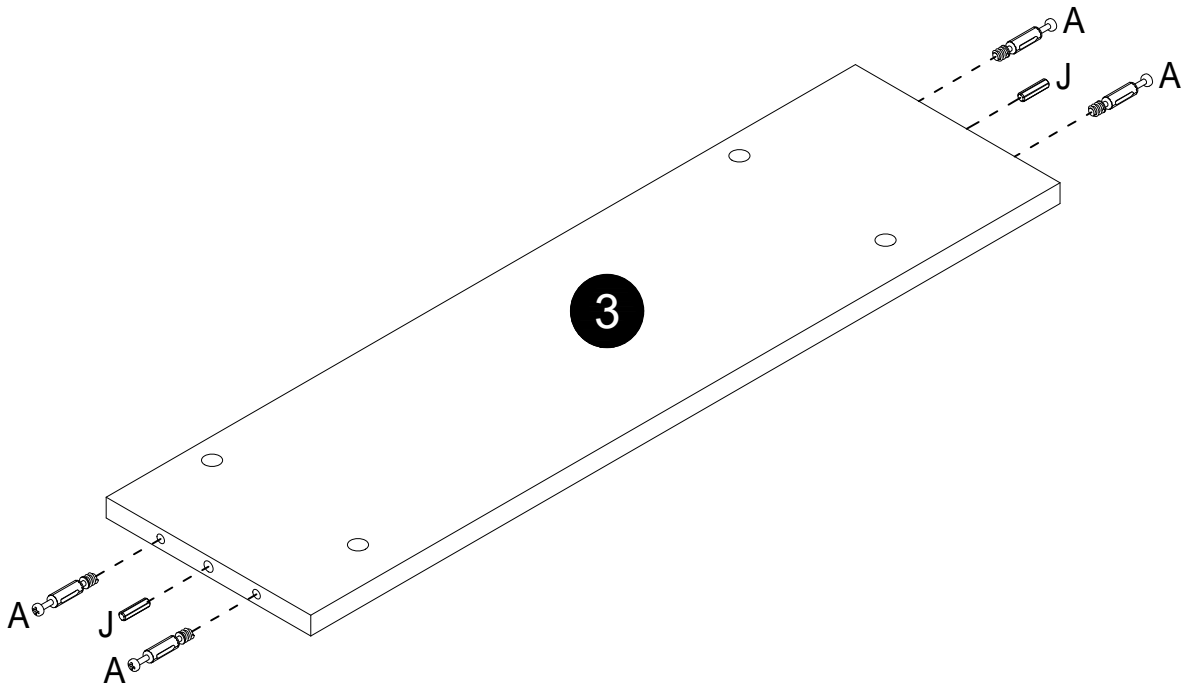


## STEP10

| B | 2PCS |
|---|---|



Pay attention to the position of the holes on the No. 3 board when installing

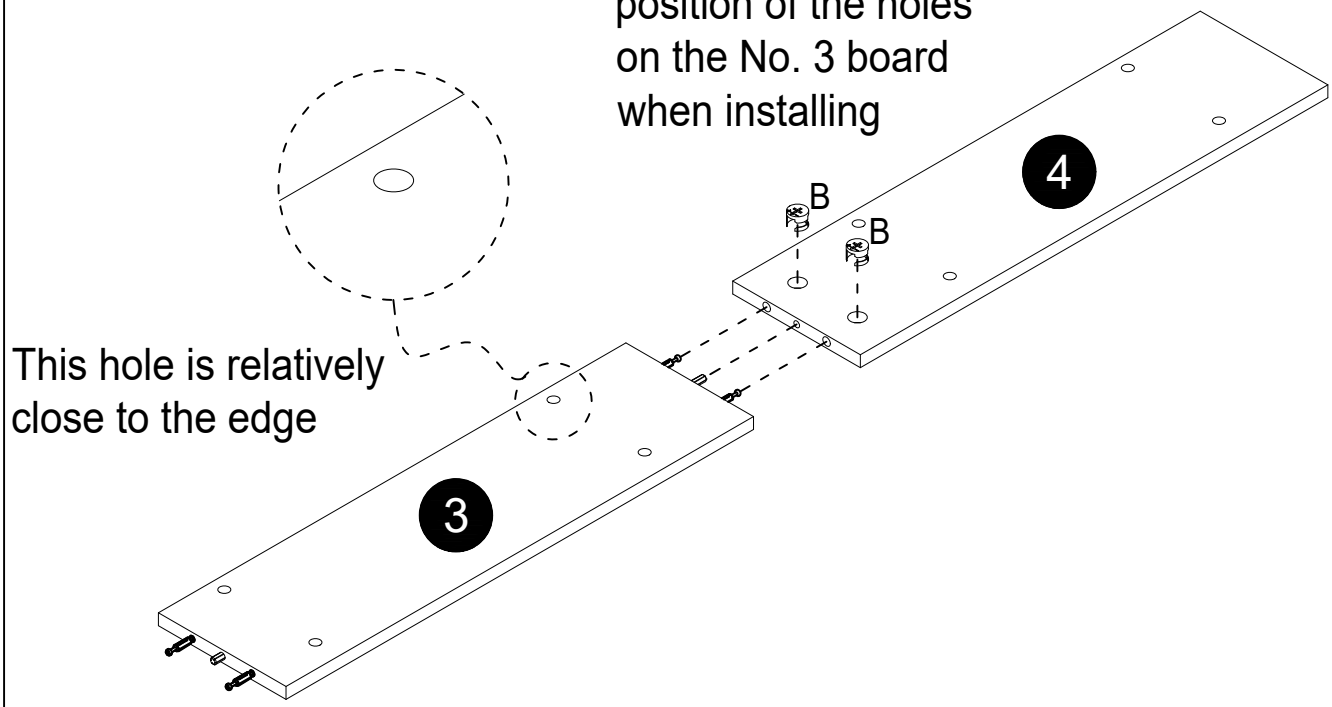

# ASSEMBLY INSTRUCTION

## STEP11

B 2PCS

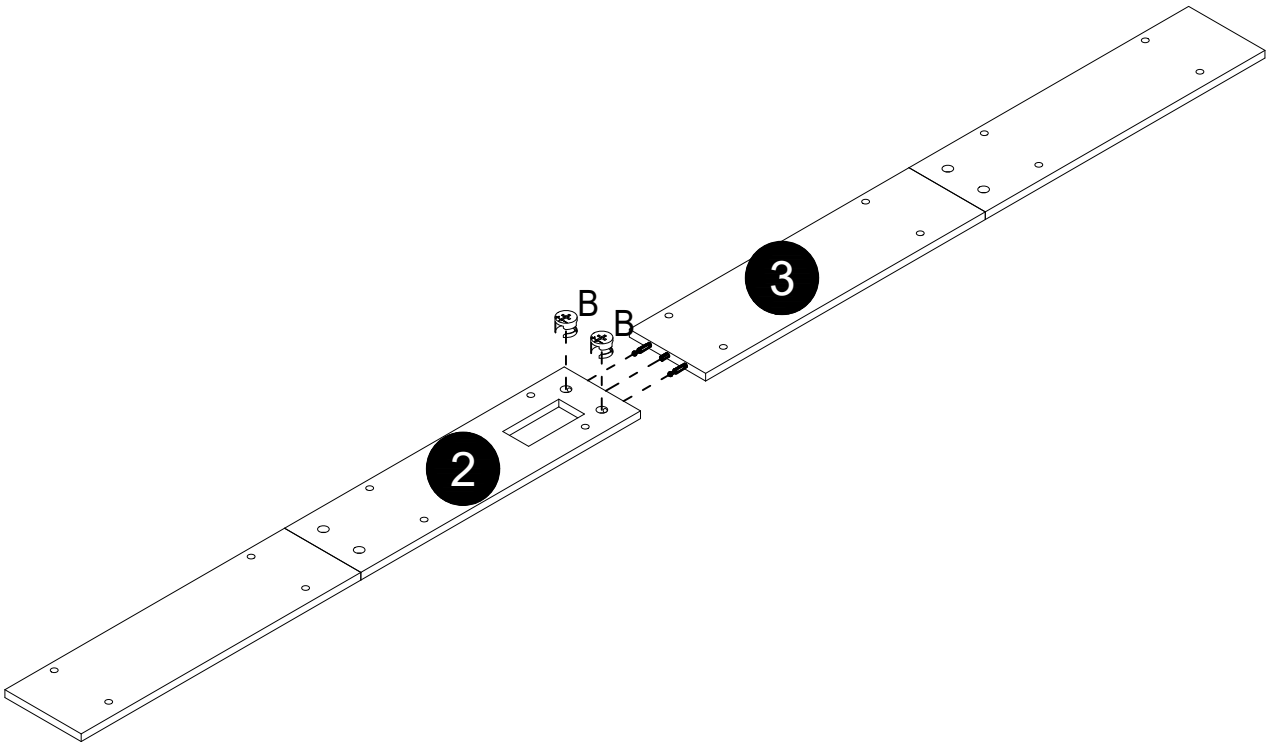

# ASSEMBLY INSTRUCTION

## STEP12

| | |
|---|---|
| G | 8PCS |
| | M6*28 |
| K | 8PCS |
| | M6*10 |

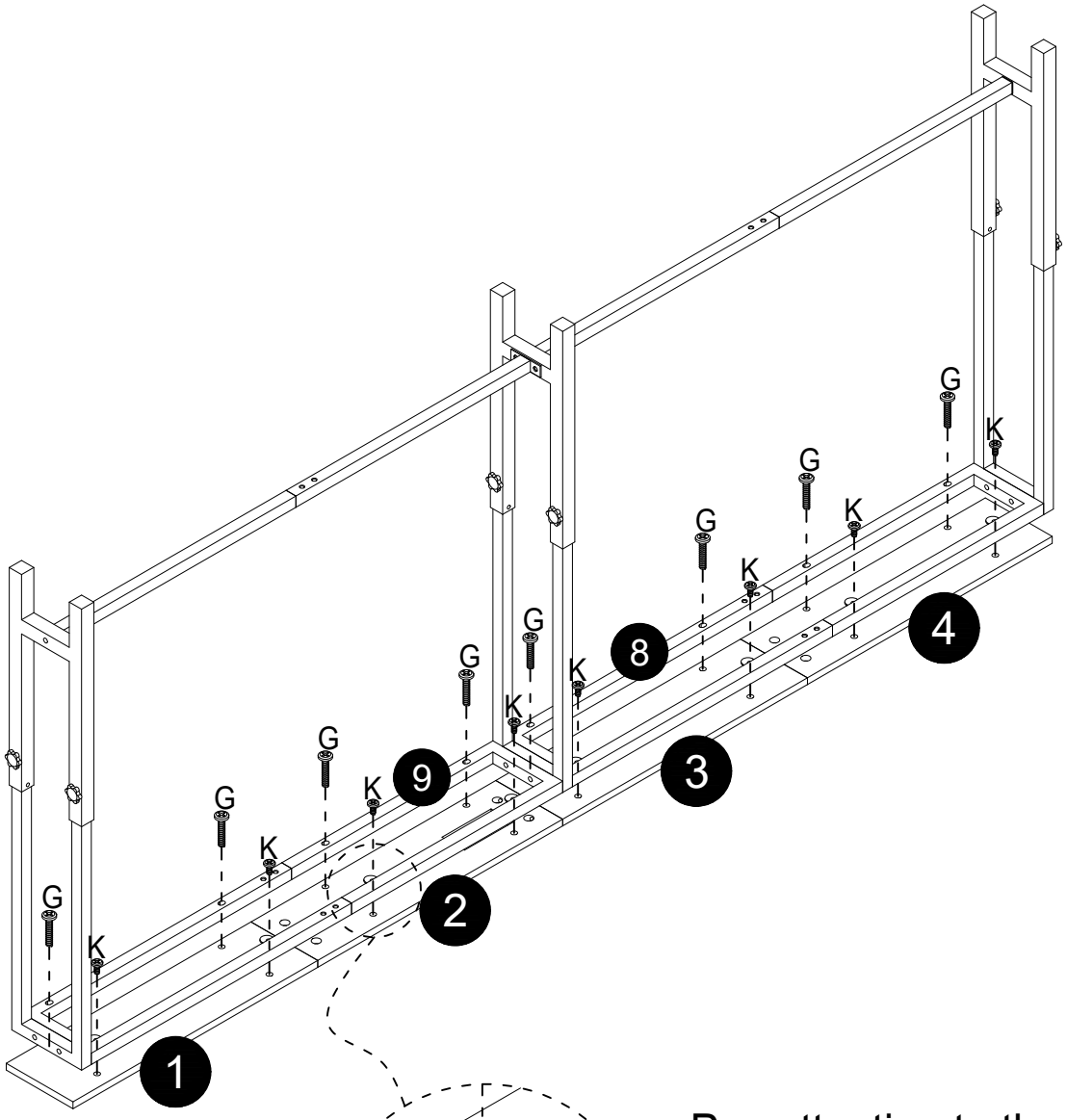


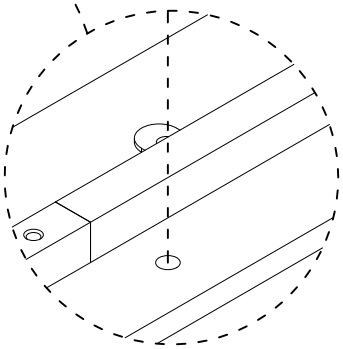

Pay attention to the placement of the holes on the iron frame

# ASSEMBLY INSTRUCTION

## STEP13

| L 2PCS | 1PC | 1PC |
| --- | --- | --- |
|  | 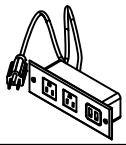 |  |

