door+ more

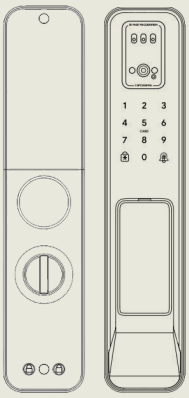

User Manual

T7-TWH

Special Attention:

Mechanical keys please keep outdoor, just in case keys lock in doors.

Please replace for the battery when low wattage alarm.

Reading this manual carefully before installation, and keep it for future reference.

1. Introduction

1.1.Lock Structure

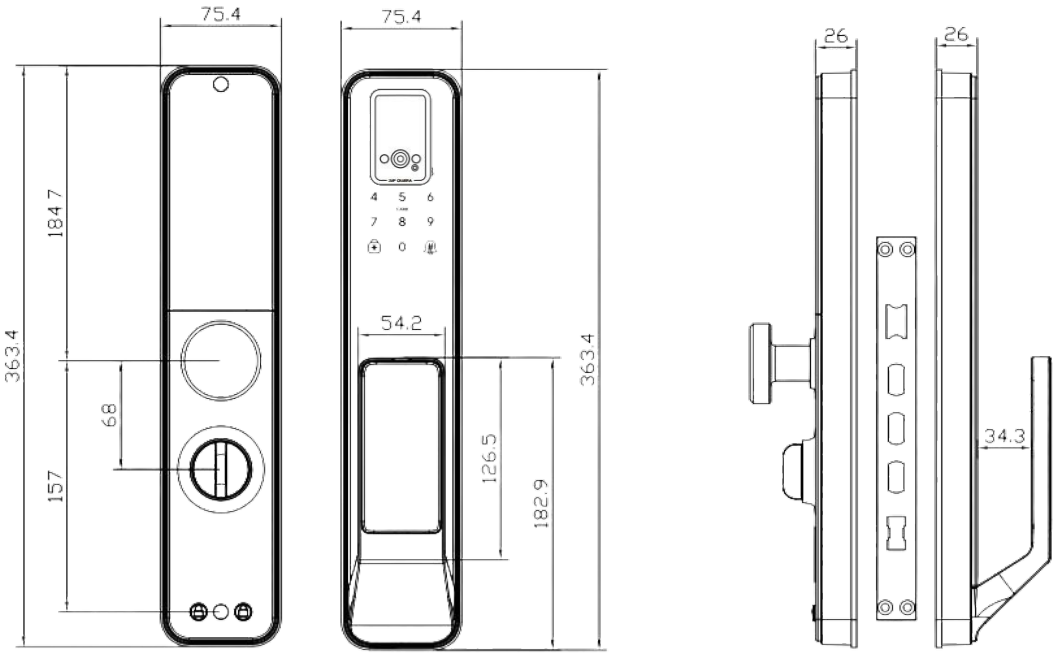

1.2.Packing List

Check the following list to check whether the package contains all the parts.

NO	Name	Qty		NO.	Name	Qty
1	Front Panel	1		10	Mortise Screws:KM5*10mm (For Steel Door)	4
2	Back Panel	1		11	Mortise Screws:KM4*25mm (For Wooden Door)	4
3	Mortise	1		12	M5*30mm Screw	1
4	Card	3		13	M5*40mm Screw	1
5	Override Key	2		14	M5*50mm Screw	1
6	Waterproof Rubber Plate	2		15	M5*60mm Screw	1
7	Screw Stubs:M5*35mm	2		16	User Manual	1
8	Strike & Strike Box	1+1		17	Screw Hole Cap	1
9	Sliding Screws:M5*11mm	1				

1.3.Specifications

Suitable for Models	T7-TWH	Doors Applicable	Aluminum door Wooden door
Materials	Aluminum alloy	Working Voltage	4200mAh lithium battery
Lock Weight	3KG	Door Thickness to Fit	38-60mm
Unlocking Way	Bluetooth Fingerprint(option) Password Card Mechanical key Face Wi-Fi	Data Capacity	Fingerprint：200 Password：150 Card：200 Face: 50
Color	Champagne Black	Working Temperature	-10℃-55℃
Low Wattage Alarm	Less than 6.8V	Working Humidity	0-95%

1.4.System Initialization

Note:Please note all date will be erased if you reset your lock to factory default.All entered fingerprint, password, and other data will be cleared.

1. Open the cover plate of the back panel.
2. Long press the reset button 5seconds,until the voice prompt "Please enter initialization password".
3. Release the reset button, and then enter "000#".

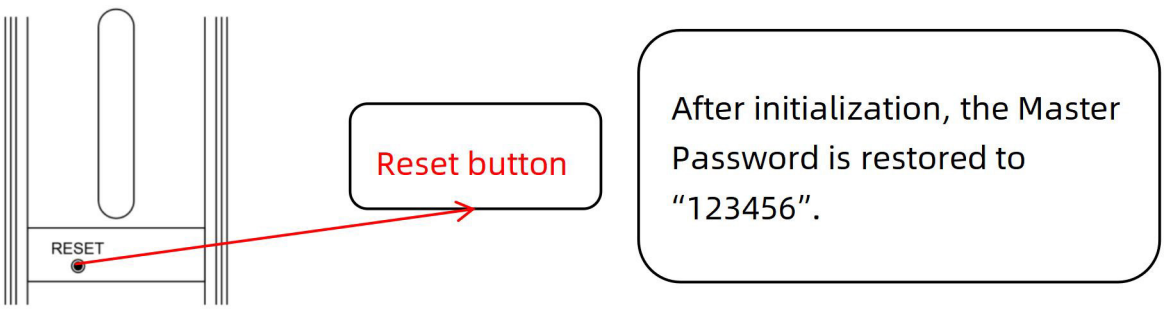

2.Installation

2.1.Installation Diagram

Step 1 Install Mortise
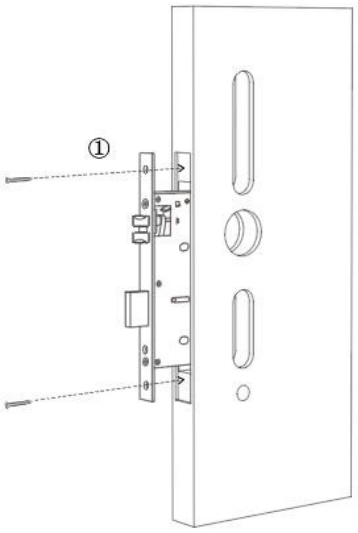 1.Install Mortise into door with Screw and fix it.
Step 2 Install Exterior Assembly
1. Install Sliding Screw and Screw Stub. 2. Install the waterproof rubber plate to exterior assembly. 3. Install cylinder into Mortise. 4. Pass the wire through the door hole and Install exterior assembly. 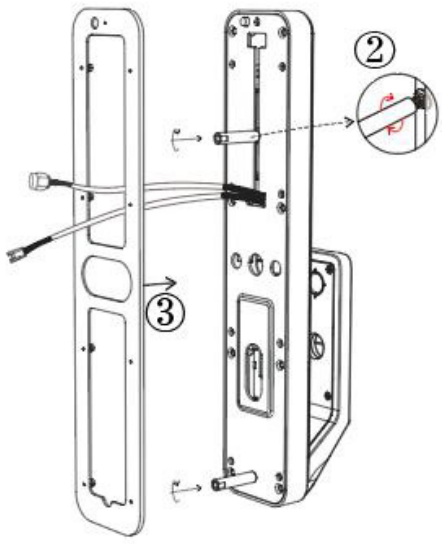 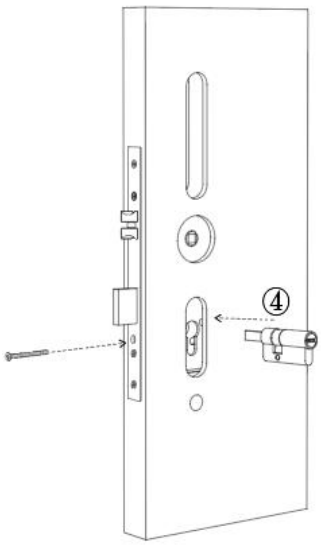 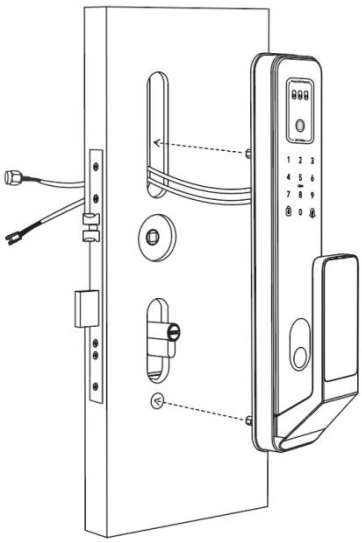

Step 3 Install Interior Assembly

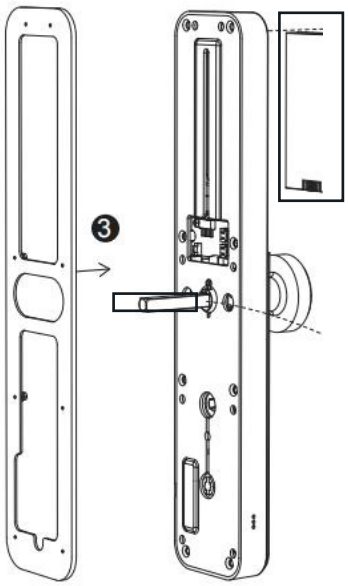

1. Install the waterproof rubber plate to fixing plate. 5
2. Remove the battery cover and Screw hole cover.

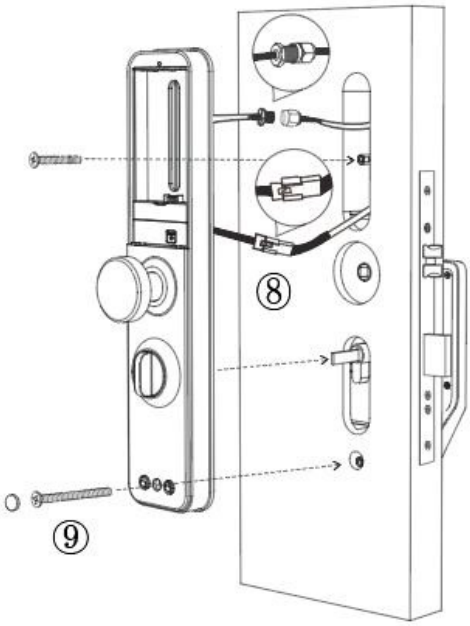

Fix the Interior Assembly on the fixing plate with screws.

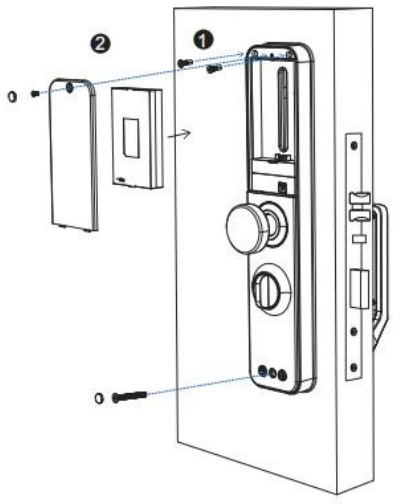

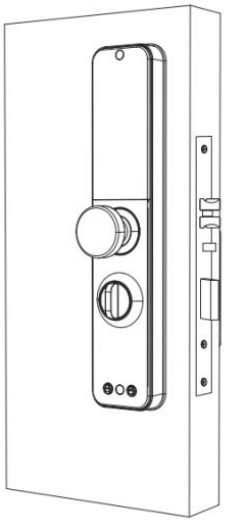

Insert lithium battery and install battery cover and Screw hole cover ,complete installation.

2.2.Adjust Door Opening Direction

After adding the APP successfully, please set the desired opening direction first.

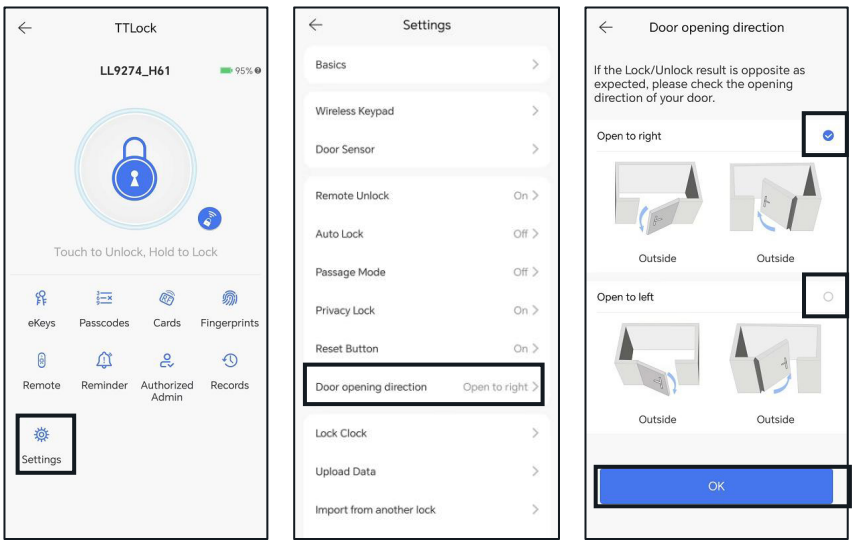

① ② ③

2.3.Unlock From Outside

①Card
Swipe your card on the keypad of the lock to unlock.

②Password
Enter 6-10 digit password and to unlock.You have set the unlock password in step.

③Fingerprint (option)
Place your finger on fingerprint reader to unlock.

④Phone Wi-Fi
Door lock keyboard press "#"Request remote unlock picking via Wi-Fi.

⑤Face
The door lock system automatically unlocks after facial verification when a person faces and approaches the lock within a range of 0-1.5 meters.

⑥Phone Bluetooth
Turn on Bluetooth, stay within 3 meters of the door lock without obstacles, then click the unlock button in the APP to unlock automatically.

⑦Mechanical key Insert the key into the lock cylinder hole and rotate it 90 degrees counterclockwise.

2.4.Unlock From Inside

①Electronic Button
Press the button once to unlock automatically, and press it again to lock automatically.

②Knob
You can manually rotate the knob to lock or unlock the door lock.

3.App operation

3.1.Download

The software (iOS version) can be downloaded from the app store, and the Android version can be downloaded from the application store of Google play.

3.2.Registration

1. please scan the QR code to download the app.
2. You can also search for TTLock in the APP store(Google Play)to download.
3. Register a new account (phone number or email) or login with an existing account.

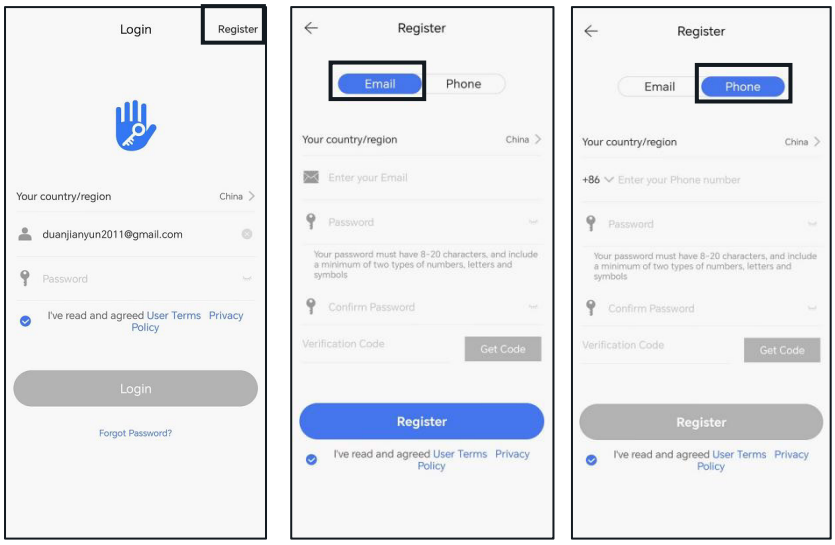

① ② ③

TTlock users can register the account by mobile phone and Email which currently support 200 countries and regions on the world. The verification code will be sent to user's mobile phone or email, and the registration will be successful after the verification.

3.3.Login

If you already have an account,choose "Register with Existing Account"and enter the log in page.

1. The system will automatically locate the current country/region you are in. Or you can choose the country/region by yourself.
2. Enter mobile number/ email and password.

If you forget your account password, you can click on "Forgot Password" to reset it, then log in to the app using the new password.

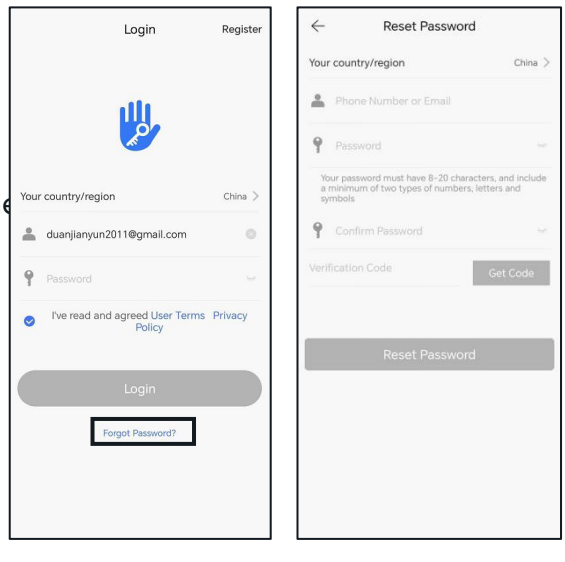

① ②

3.4.Add locks

1. Open the mobile Bluetooth.
2. In the TTLock APP,click "+ Add Lock" "All Locks".
3. Touch the lock screen to light.
4. The lock nearby will appear on the phone screen, click "+".
5. Select the 2.4Gz WiFi and enter Wi-Fi password (It can only connect to 2.4G Wi-Fi).
6. The lock added successfully.

TTLock supports multiple types of lock devices. The lock needs to be added by the app after entering the add mode. Generally, a lock that has not been added, as long as the lock keyboard is touched, it will enter the add mode. For a lock that has already been added, it needs to be initialized before it can be added again.The default password is 123456 if not added by the phone.

Note:If the lock cannot be added in the above steps, please close the mobile app and Bluetooth, reopen the app and Bluetooth, and repeat the steps to add the lock.

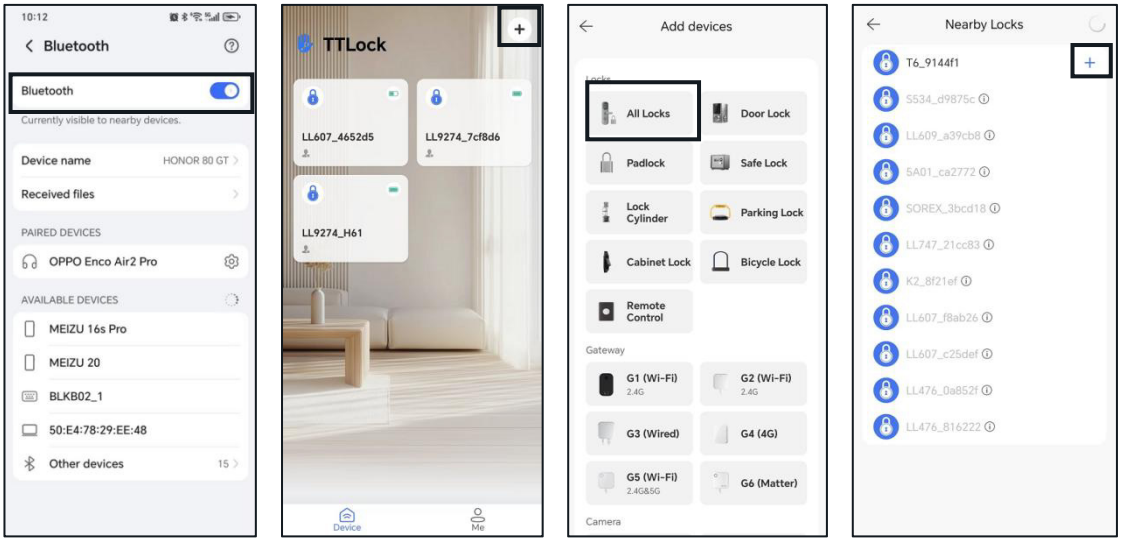

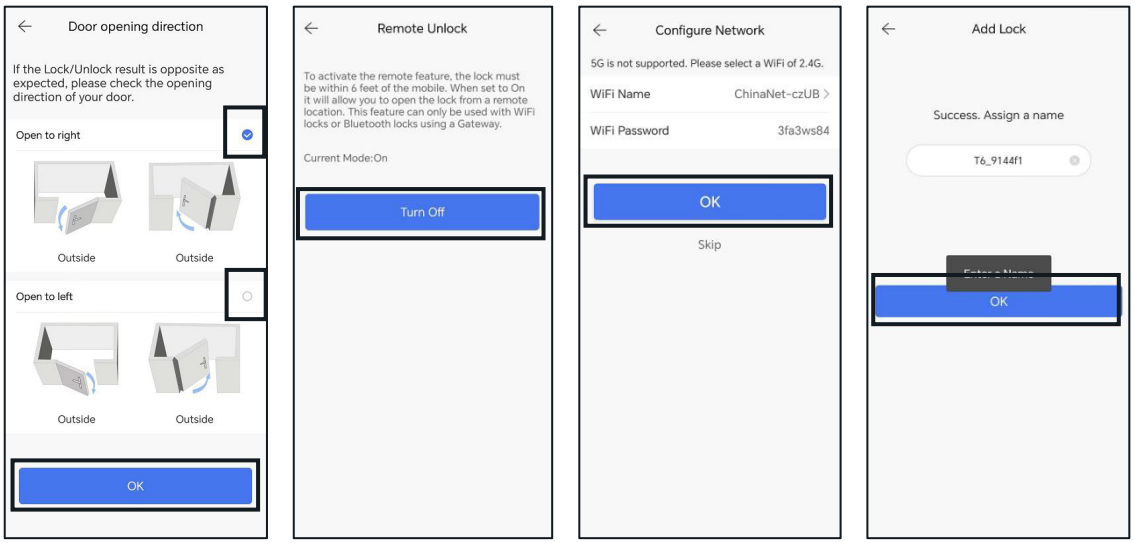

3.5.Connect Wi-Fi

Click on the "settings " as shown in figure, you can set up the WIFI setting → Select " WIFI " → Click on t"Configure network", chose the 2.4Gz WiFi what you need.

（If you need to change your WiFi, this step will help you.）

Power saving mode

a)Turn off the "Power saving mode"

Keep WiFi connected at all times， You can use the app to remotely unlock .

b)Turn on the"Power saving mode"

Unable to unlock through " " ， unable to the reported message can be received.

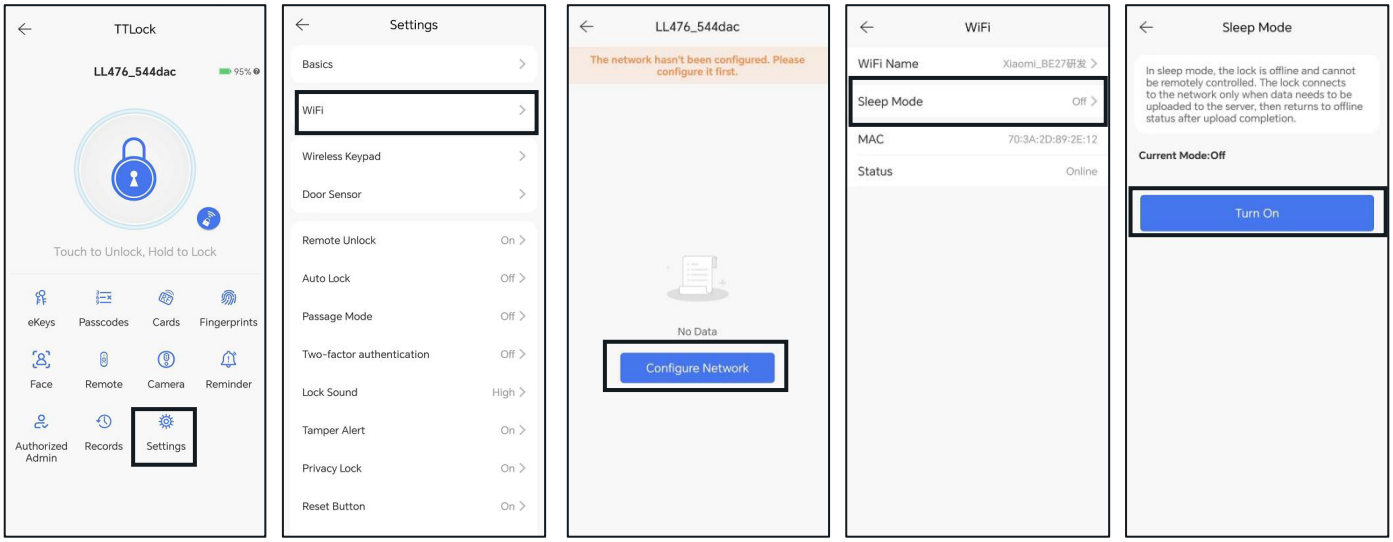

①　　③　　④　　⑤

3.6.Bluetooth unlock

Make sure there is no problem with Bluetooth communication. After connecting the phone to the door lock as above, Click "

"to unlock.

Note:the phone is within 5meters from the door lock and there should be no walls or other obstacles in between.

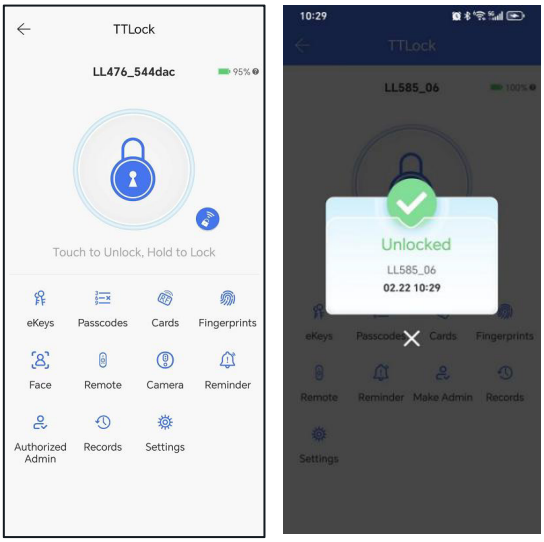

①　　②

3.7.Remote unlock

Note:Must turn on"remote unlocking "

1.Turn on "remote unlock" in Settings, ensure that the lock is connected to wifi and Turn off the "Power saving mode" . Click on to remotely unlock.

2.Press "#" on the lock ,the APP can receive remote unlock requests within a minute.

Click  to enter the video intercom interface, you can talk to visitors, or click remote unlock.

Note:When someone rings the doorbell and the phone does not have a message pushed, you should check if notification push is enabled in the application settings.

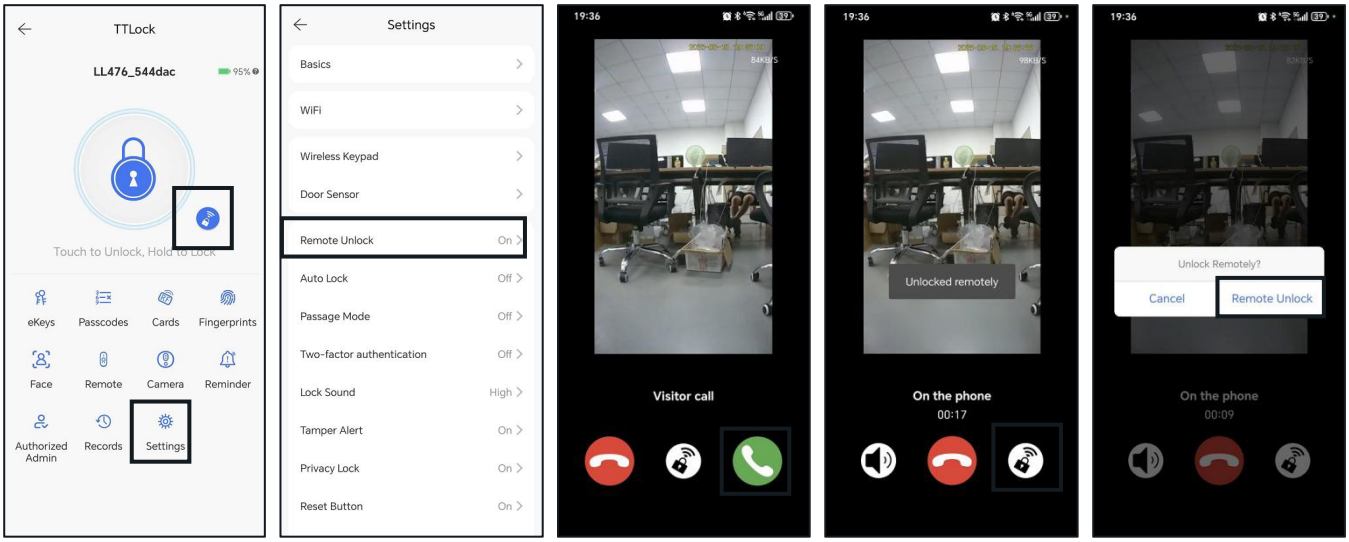

① ② ③ ④ ⑤

3.8. Setting Passcode

Passcodes are also a way to unlock. After entering the passcode on the locked keyboard, press the unlock button in the lower right corner to unlock. Passcodes are divided into permanent, time-limited, one-time,permanent, recurring, custom and erase passcodes. You can share the Passcode to other user via WeChat、SMS、 Email、Messenger、WhatsApp.

Note:

The time-limited passcode can be used for unlimited times within the validity period. This passcode must be used at least once within 24 hours after Start time, or it will be suspended for security reasons.

2. The one-time passcode must be used within 6 hours from the current time or it will be suspended for security reasons. This passcode can only be used once.
3. This permanent passcode must be used at least Once, within 24 hours from current time, or it will be suspended for security reasons.
4. You can configure your own passcode. It needs to be between 4 - 9 Digits in Length. You can configure the customized passcode via Bluetooth or remotely via network.

5. The recurring passcode can be used for unlimited times within the validity period.

This passcode MUST BE used at least ONCE within 24 Hours after Start Time or it will be SUSPENDED for Security Reasons.

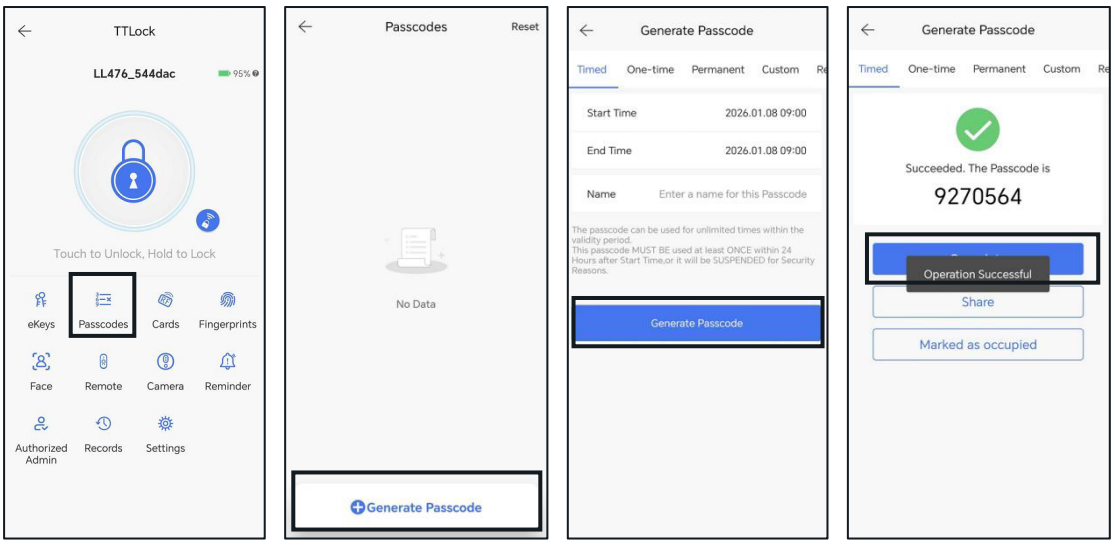

3.9.Add card

Supports opening doors through various IC cards. Before an IC card is used to ope n the door, it needs to be added first. The adding process needs to be performed by the app beside the lock.The validity period of the IC can be set, it can be perma nent, timed or recurring.

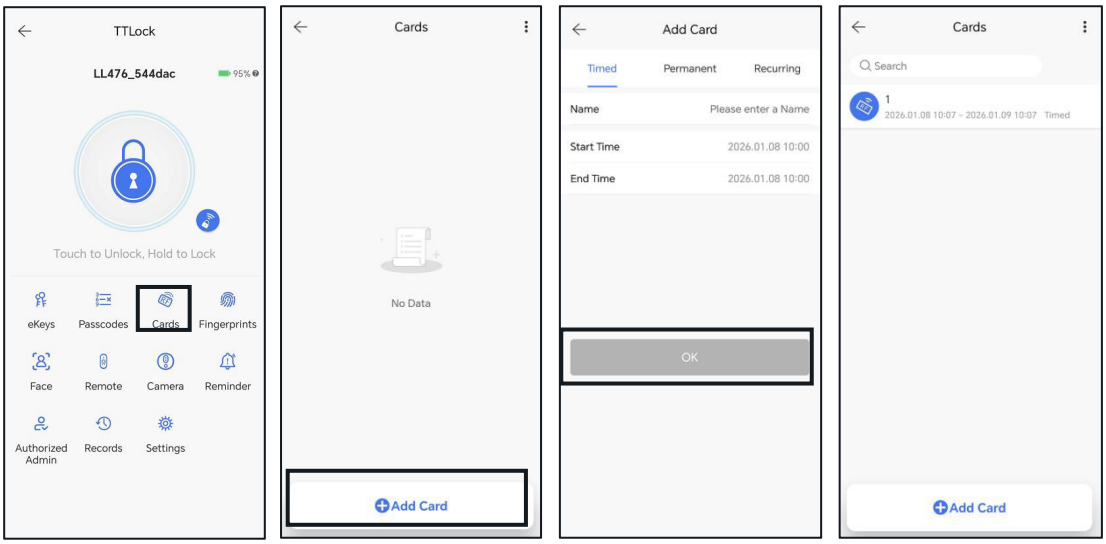

3.10.Add fingerprint(Optional)

The premise that a fingerprint can be used to open a door is that it needs to be added first. The adding process needs to be performed by the APP beside the lock. The fingerprint expiration data can be set, it can be permanent, timed or recurring. After setting ,you can modify its validity period.

If someone forces you to open door, you can use this forced fingerprint.The alarm message will be sent to the administors. To use this feature, please make sure your lock is online.Please don't use the forced fingerprint for daily use.

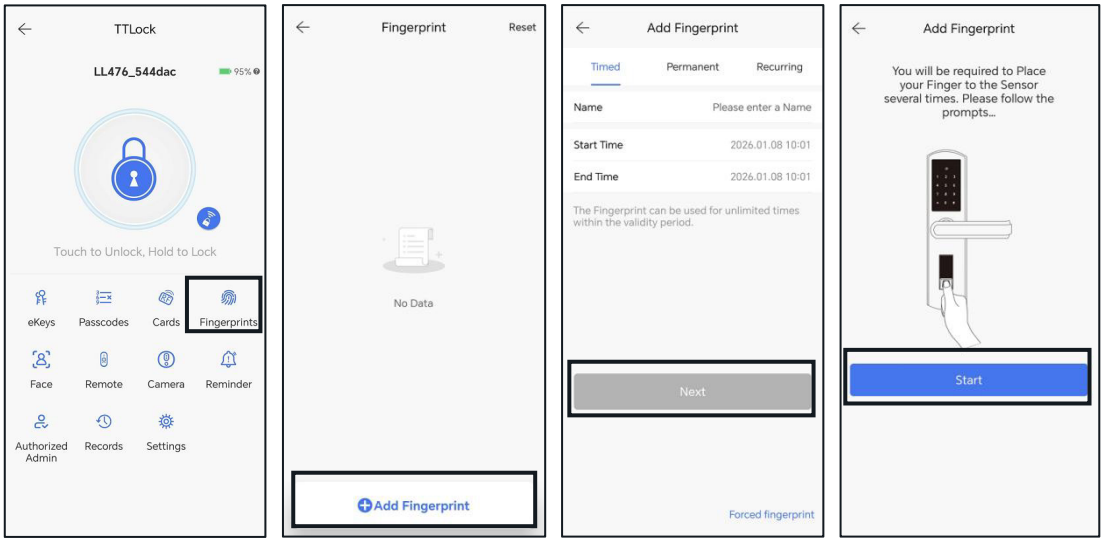

3.11.Face

Adding a face at a distance of 0.6-0.8 meter from the lock works best， faces can't be added beyond 1.2 meters.

When the red light on the front panel flashes, point your face directly at the camera, and then turn your face according to the keypad number flashing: "6" blinking, face to the right; 4 "Flash, face to the left;" 8 "Flash, bow down; "2" blinks and looks up. When you hear a successful tone, the addition is complete. Disable face recognition sensitivity (radar detection) in the APP.Press "9# "key combination on the door lock keypad to manually trigger face recognition when needed.

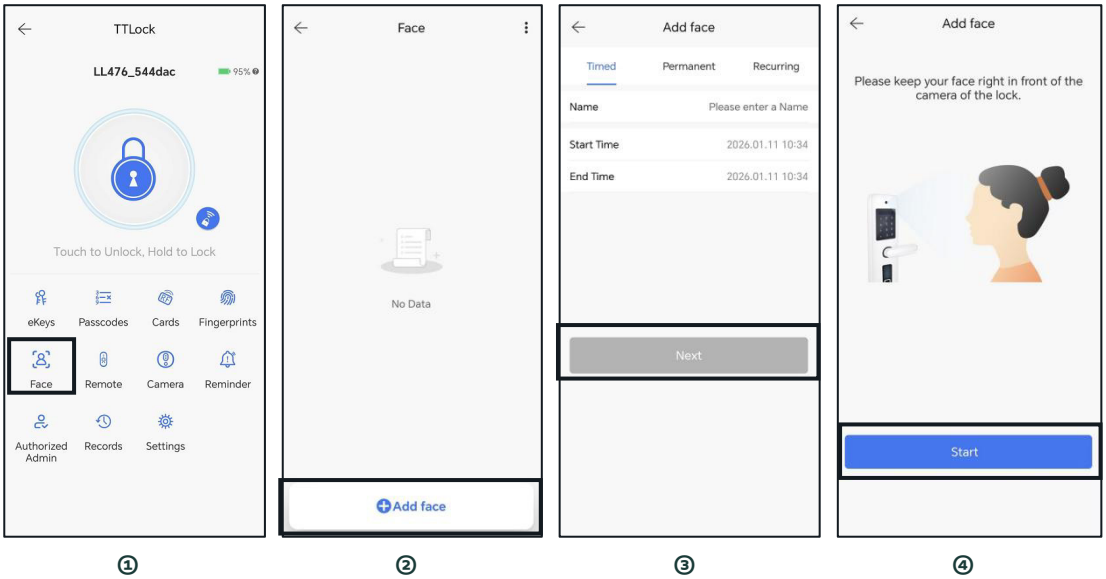

3.12.Camera

1.Requirements of use：The lock must be connected to WiFi ,turn off the"Power saving mode"and turn on"remote unlock" .

2. Operation：click "camera",The video intercom screen is displayed.

a)Click" " for video intercom,You can also mute by clicking" ".

b)Click" "to Take a photo,Click" "to record,Photos and videos are saved to the phone album.

c)Click" ",Alert information can be viewed by date.

d） Turn on "motion detection", if someone stays in front of the door for 10 seconds.

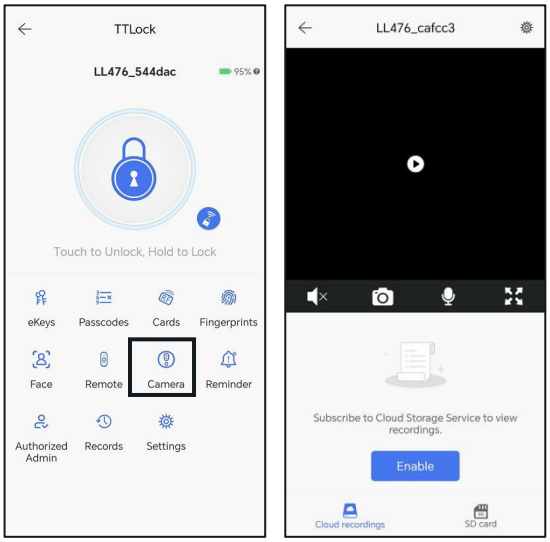

① ②

3.13.Send eKeys

Click on the "eKeys"as shown in figure, you can send the eKey to other users of TTlock to authorize the unlock(the receiver must be download the APP and set up an account)→ Select e-key format (Timed, permanent, One-time, Recurring) → Enter recipient's account of TTlock,set the name and effective time of the eKey, choose to allow remote unlocking or disallowing, authorized administrator or not authorized, as shown in figure →Send→The recipient's account has Bluetooth unlock permission.

The eKeys manager can delete ekey, reset ekey, send and adjust the ekey, meanwhile he can search the lock record.

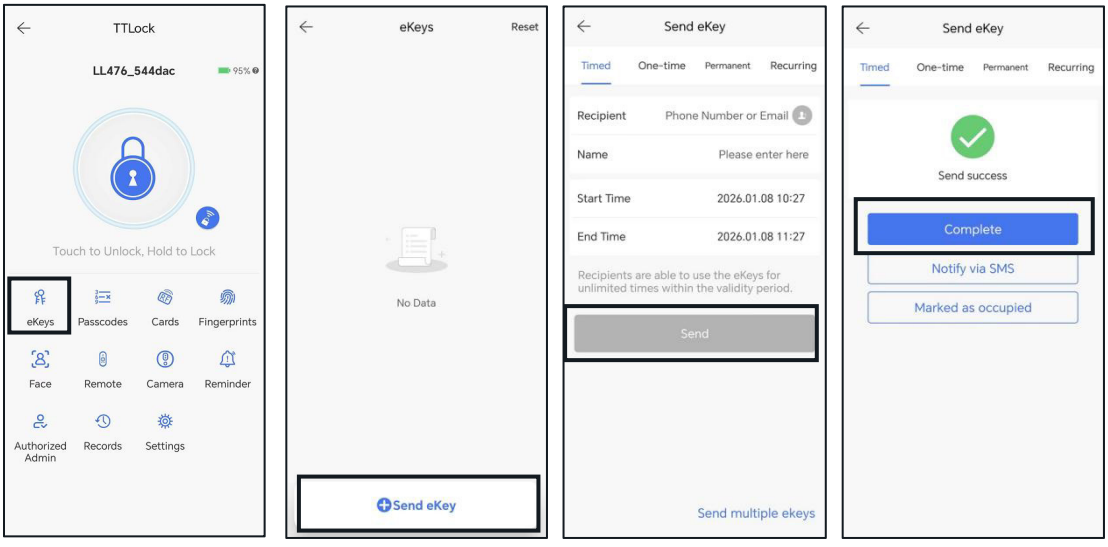

① ② ③ ④

3.14.Unlock records

Click " Records "you can query your unlock record as shown in figure. Cannot see the operation records possible reasons: 14

1.The lock is not connected to the internet, so the records of passcode card, fingerprint, and other door opening methods cannot be uploaded in real-time.

2.Only a certain period of records can be retained.If you need to keep the historical records, you can export the them.

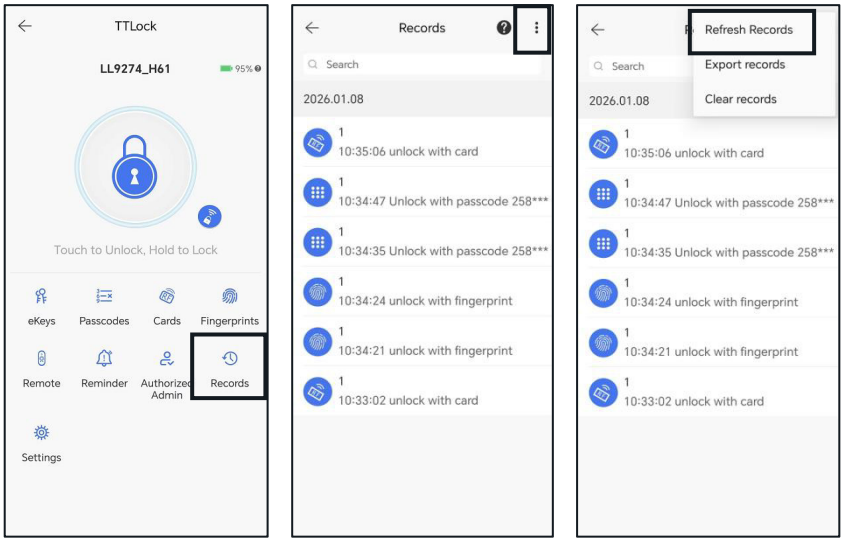

① ② ③

5.FAQ

1) How to read operation records?	In the Records of the main interface.
2) Why can't I unlock it after open the passage mode	You need to perform an unlock verification in any method, then the passage mode will take effect.
3) What is the purpose of Auto Lock	You can set how long to lock after unlocking
4） After installation, touch sensing keyboard, screen no respond	a) In this case, first check that the positive negative and negative electrodes of the battery have been installed upside down, whether the battery has enough power b) Remove the back panel and see if it's connected c) To eliminate the above situation, you need remove to the lock ,check whether the wires lock body are of the squeezed, and the re-wire
5） Unable to register fingerprint	Check the fingers for dirt or wear, check the fingerprint head on the lock for dirt and oil stains, etc. Check to see if the fingerprint is working properly(Press to see if there is any responds.
6） What is the reason why the smart lock consumes fast power?	a) Large standby power consumption b) Short circuit
7） There is no response to pressing the handle on outside the door, and there is unlock normally on inside the door, but the verification is normal, and the motor is normal.	It may be the triangle direction on the clutch was error, please check correction.
8） How many times will the password be locked? How long is it locked?	Enter the wrong password more than 5 times in a row, the keyboard is locked for 90 seconds
9） Why is there no notification push on the doorbell mobile app	Check if notification push is enabled in the app settings

Guarantee

Customer Name : _____

Customer Calls : _____

Purchase Date : _____

Product Name : _____

Product Model : _____

Note:

①Please keep this card so that you can use it when you need warranty service.

②We provide you with a one-year warranty from the date of purchase.

~ This warranty service is valid for customers in any country in the world.



+813-876-6699
sales@doornmore.com
4904 Savarese Cir, Tampa, FL 33634