36 wide

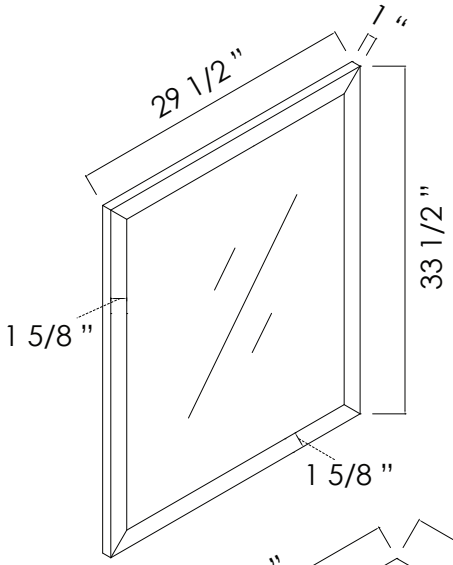
1 "
29 1/2 "
33 1/2 "
1 5/8 "
1 5/8 "

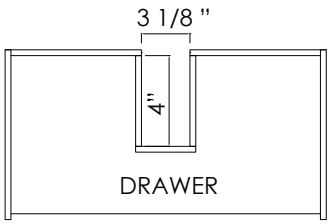
3 1/8 "
4"
DRAWER

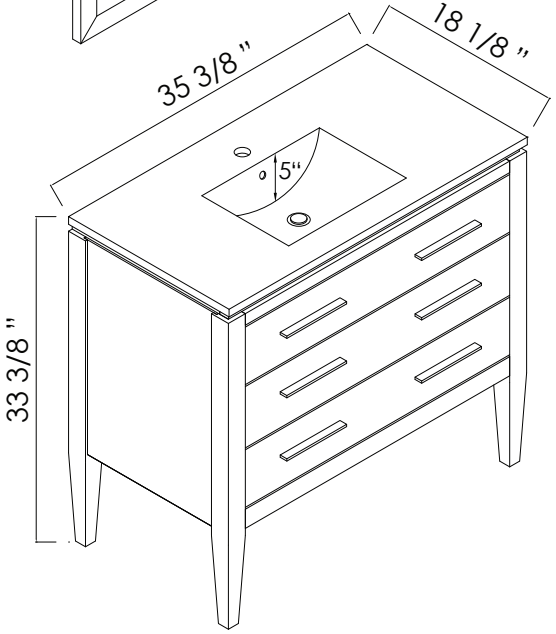
35 3/8 "
18 1/8 "
5"
33 3/8 "

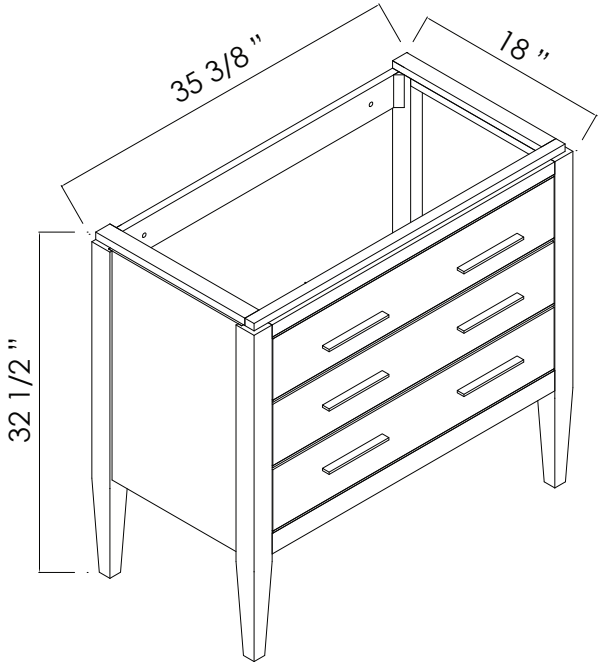
35 3/8 "
18 "
32 1/2 "

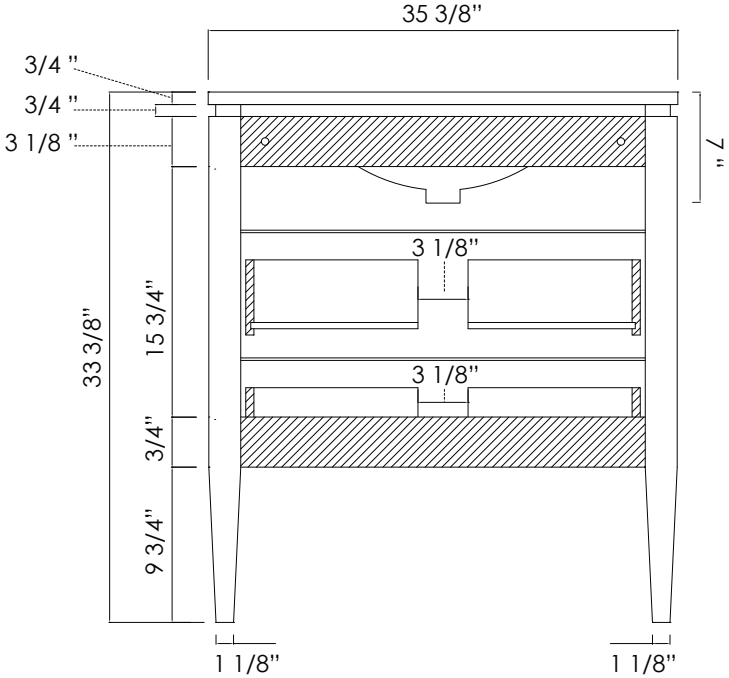
35 3/8"
3/4 "
3/4 "
3 1/8 "
7 "
3 1/8"
3 1/8"
33 3/8"
15 3/4"
3/4"
9 3/4"
1 1/8"
1 1/8"