LB-067-2-F
V.20260409

Assembly instruction

Full Loft Bed

BSW09118AAK1(BSW09118AAB1)
BSW09118AAK2(BSW09118AAB2)

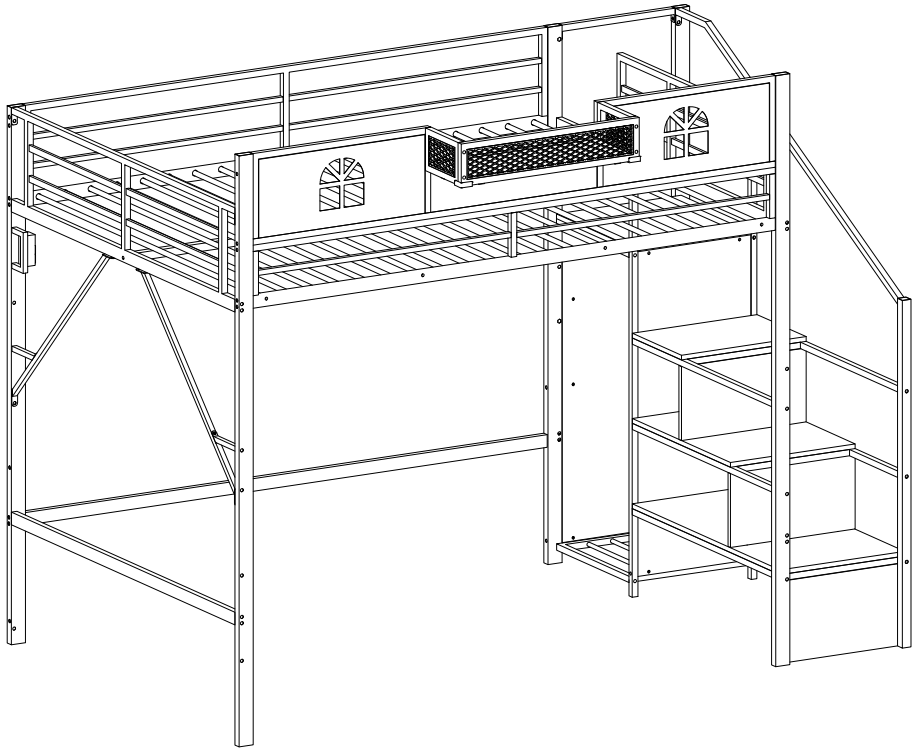

A

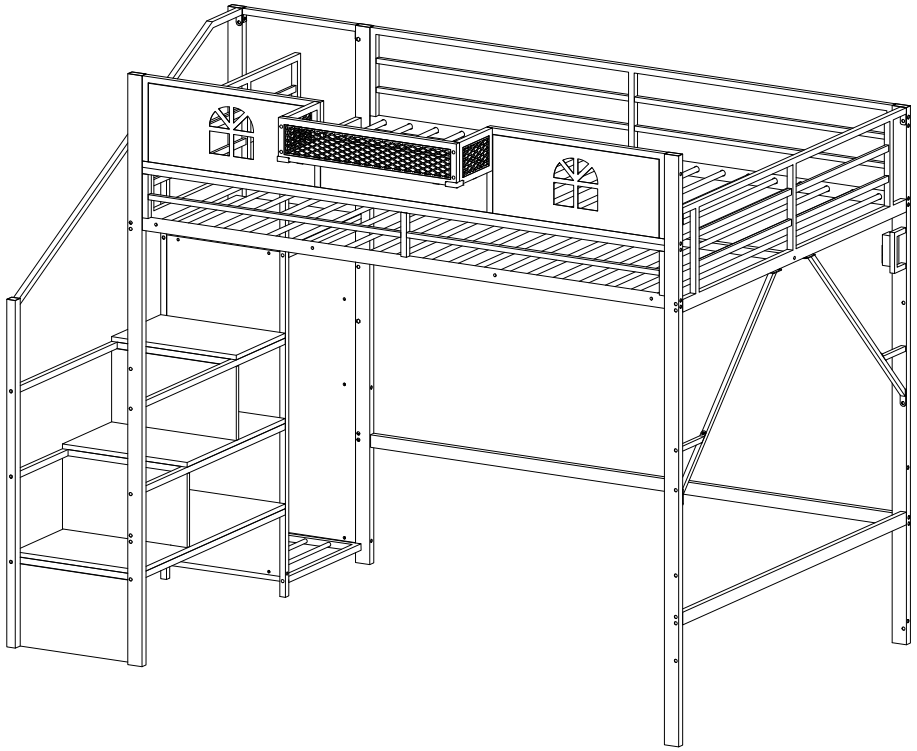

B

WARNING

Keep these instructions for future reference

To help prevent serious or fatal injuries from entrapment or falls:

Follow the information on the warnings appearing on the upper bunk end structure and on the carton. Do not remove warning label from bed.

Use only mattress which is 74"-75”long and 53"-54"wide on upper bunk.

Always use the recommended size mattresses or mattress supports, or both, to help prevent the likelihood of entrapment or falls.

Surface of mattress must be at least 5 in. (127 mm) below the upper edge of guardrails.

Ensure upper bunk thickness of mattress does not exceed 6”, mattress is at least 5”below upper edge of guardrails.

Do not allow children under 6 years of age to use the upper bunk.

Periodically check and ensure that the guardrail, ladder, and other components are in their proper position, free from damage, and that all connectors are tight.

Do not allow horseplay on or under the bed and prohibit jumping on the bed.

Always use the ladder for entering and leaving the upper bunk.

Keep these instructions for future reference.

Do not use substitute parts. Contact the manufacturer or dealer for replacement parts.

Use of a night light may provide added safety precaution for a child using the upper bunk.

Always use guardrails on both long sides of the upper bunk. If the bunk bed will be placed next to the wall, the guardrail that runs the full length of the bed should be placed against the wall to prevent entrapment between the bed and wall.

The use of water or sleep flotation mattresses is prohibited.

Replacement Parts-Replacement parts,including additional guardrails,may be obtained from any of Zhongshan Besway Technology Co., Ltd.

STRANGULATION HAZARD - Never attach or hang items to any part of the bunk bed that are not designed for use with the bed; for example, but not limited to, hooks, belts and jump ropes.

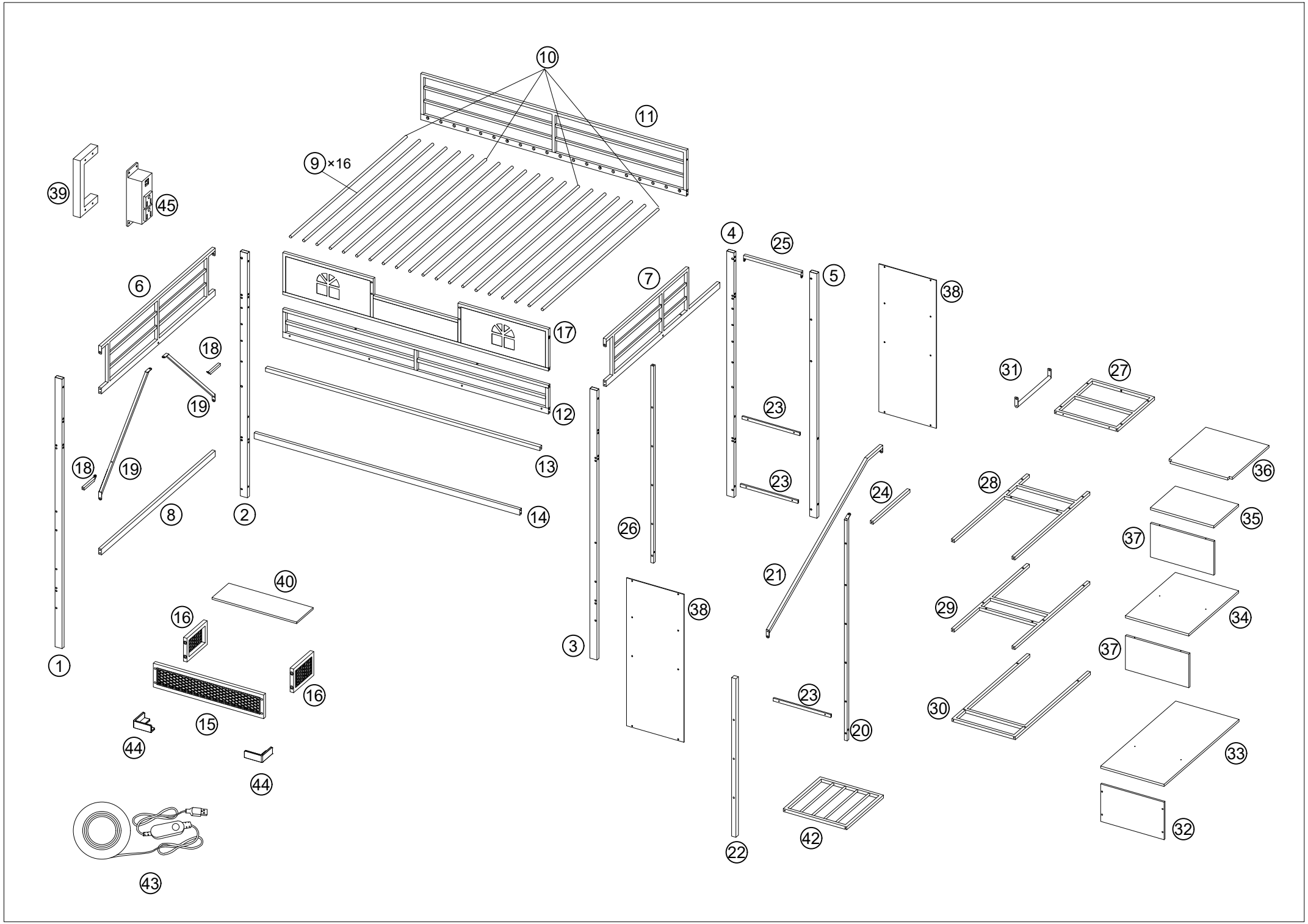
10
11
9 ×16
39
45
4
25
5
38
6
7
17
18
19
12
31
27
23
13
18
19
23
36
24
28
8
2
14
35
26
37
21
40
38
29
34
16
3
37
1
16
23
30
15
20
44
33
44
42
32
22
43

Parts List For BSW09118AAK2(BSW09118AAB2)

① x1 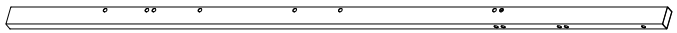	② x1 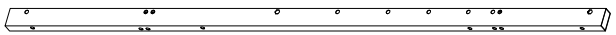	③ x1 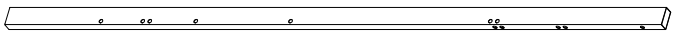
④ x1 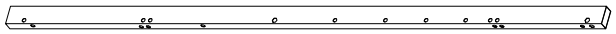	⑤ x1 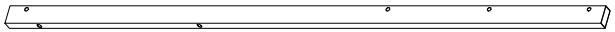	⑥ x1 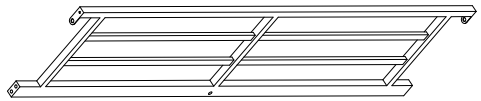
⑦ x1 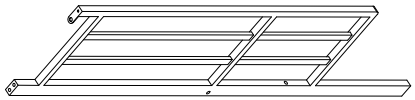	⑧ x1 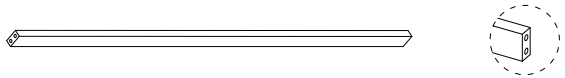	⑪ x1 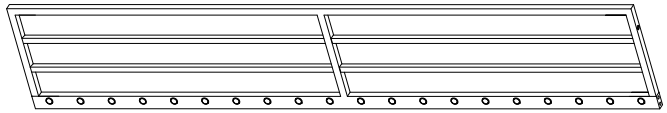
⑫ x1 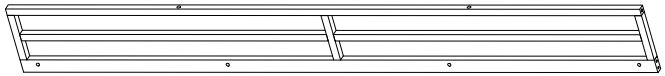	⑬ x1 	⑭ x1 
⑰ x1 	⑱ x2 	⑲ x2 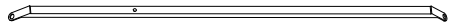
⑳ x1 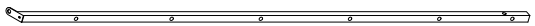	㉑ x1 	㉒ x1 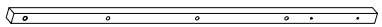
㉖ x1 		

Parts List For BSW09118AAK1(BSW09118AAB1)

⑨ x16

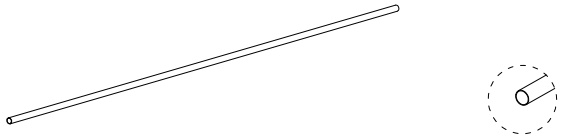

⑩ x4

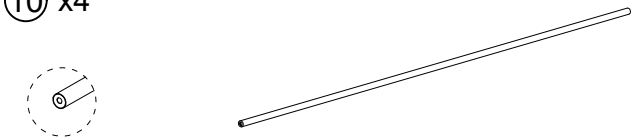

⑮ x1

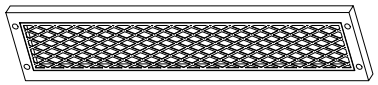

⑯ x2

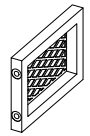

㉓ x3

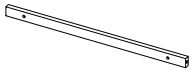

㉔ x1



㉕ x1



㉗ x1

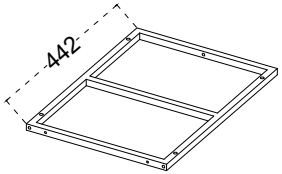

㊱ x1

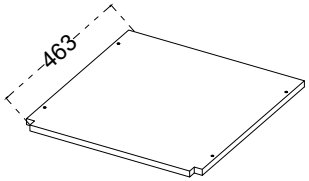

㉘ x1

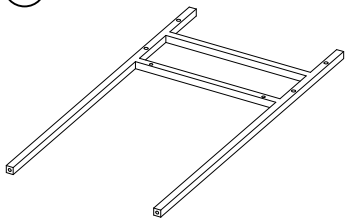

㉟ x1

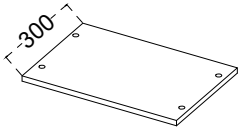

㉙ x1

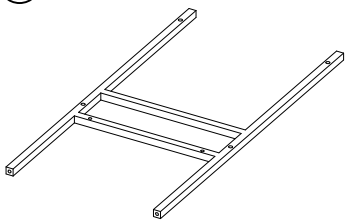

㉞ x1

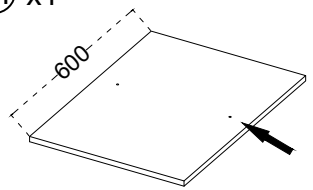

㉚ x1

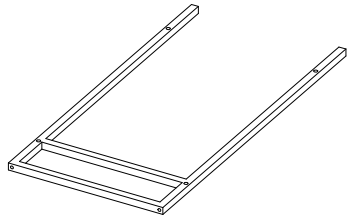

㉝ x1

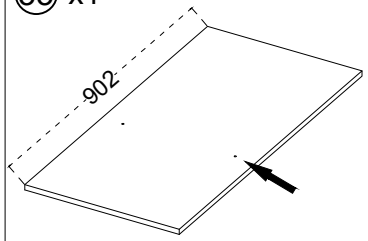

㉛ x1

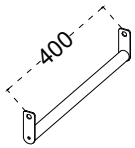

㊸ x1

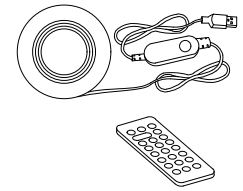

㉜ x1

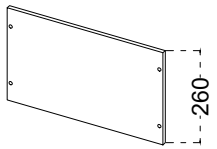

㊲ x2

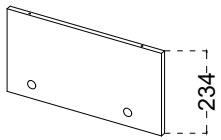

㊴ x1

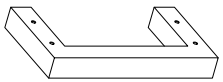

㊳ x2

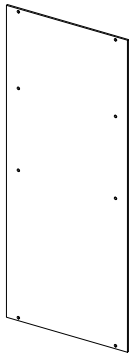

㊹ x2

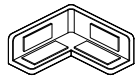

㊵ x1

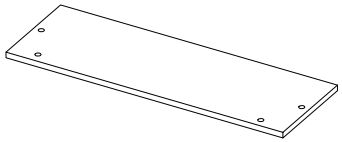

㊷ x1

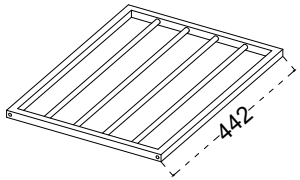

㊺ x1

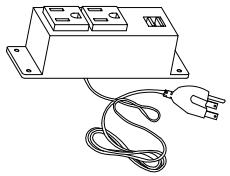

Hardware List For BSW09118AAK1(BSW09118AAB1)

Ⓐ x12  M8×70mm	Ⓑ x9  M8×65mm	Ⓒ x23  M8×45mm	Ⓓ x23  M8×35mm	Ⓔ x13  M8×20mm	Ⓕ x6  M6×40mm
Ⓖ x22  M6×30mm	Ⓗ x2 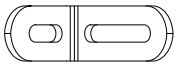	Ⓘ x2 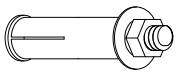	Ⓙ x1 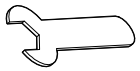 M6	Ⓚ x4 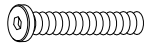 M6×70mm	Ⓛ x19  M6×15mm
Ⓜ x10  M6×12mm	Ⓝ x4  M5×25mm	Ⓞ x4  M5×40mm	Ⓟ x4 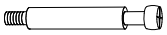 M6×45mm	Ⓠ x4  Ø15*12mm	Ⓡ x1 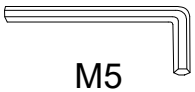 M5
Ⓢ x1  M4	Ⓣ x1 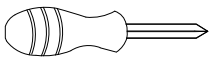	Ⓤ x30 	Ⓥ x2 	Ⓦ x4  M3×12mm	41 x4 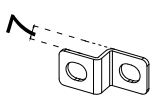

A: STAIRS INSTALL AT RIGHT SIDE

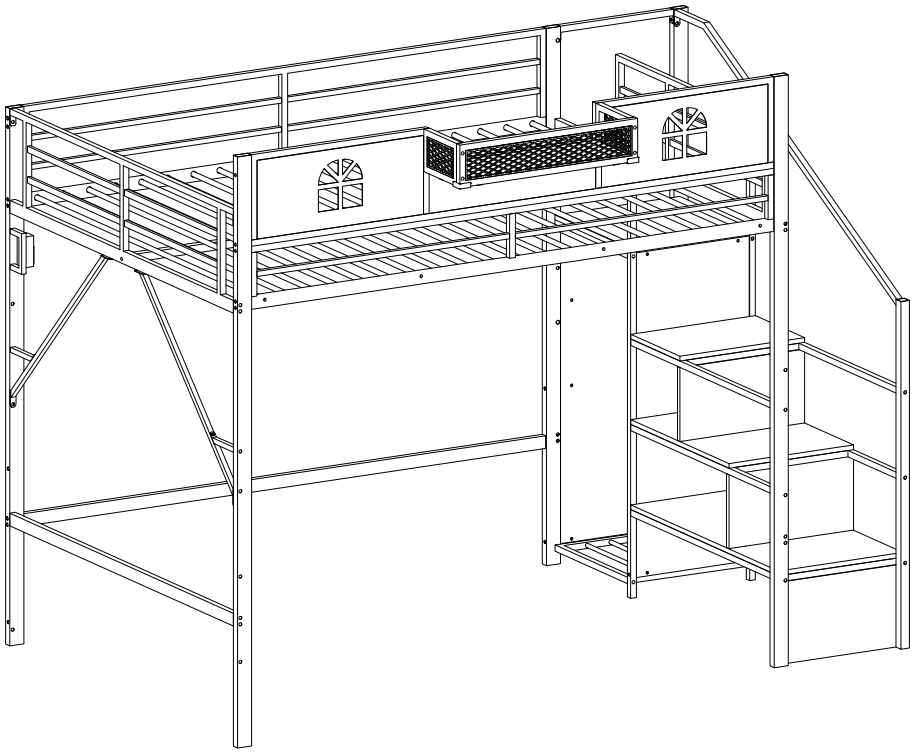

B: STAIRS INSTALL AT LEFT SIDE

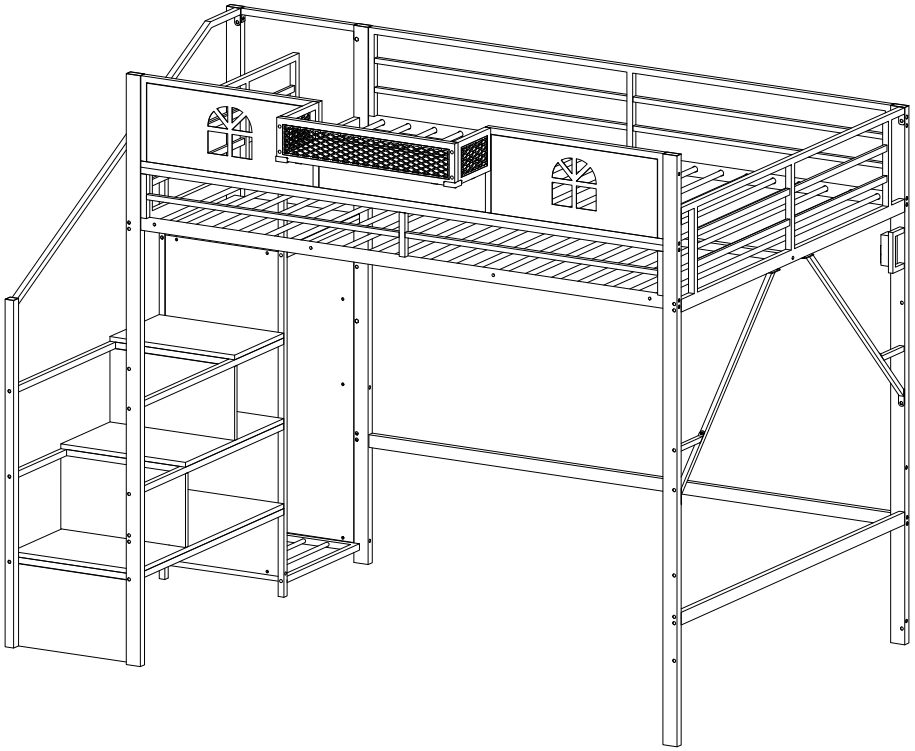

1

A

C		M8×45	8
E		M8×20	2
R		M5	1

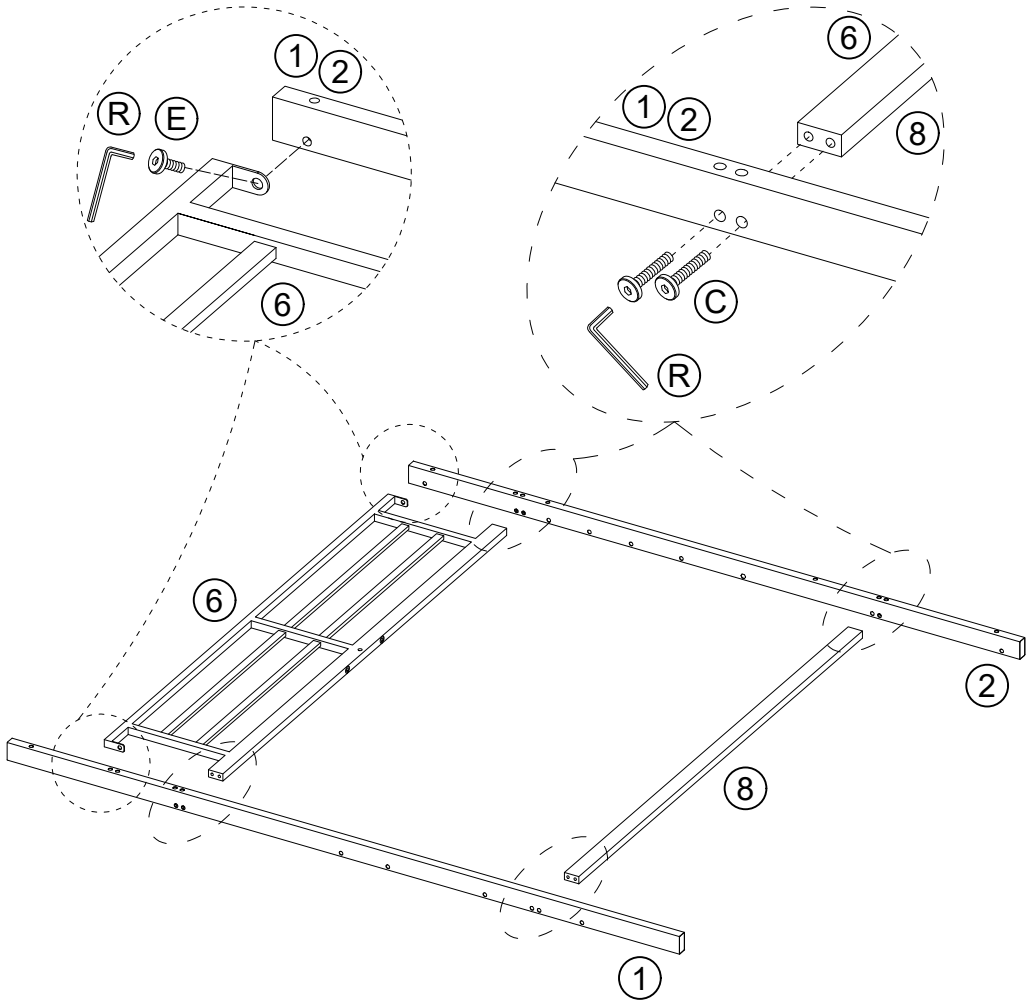

1

B

C		M8×45	4
E		M8×20	1
R		M5	1

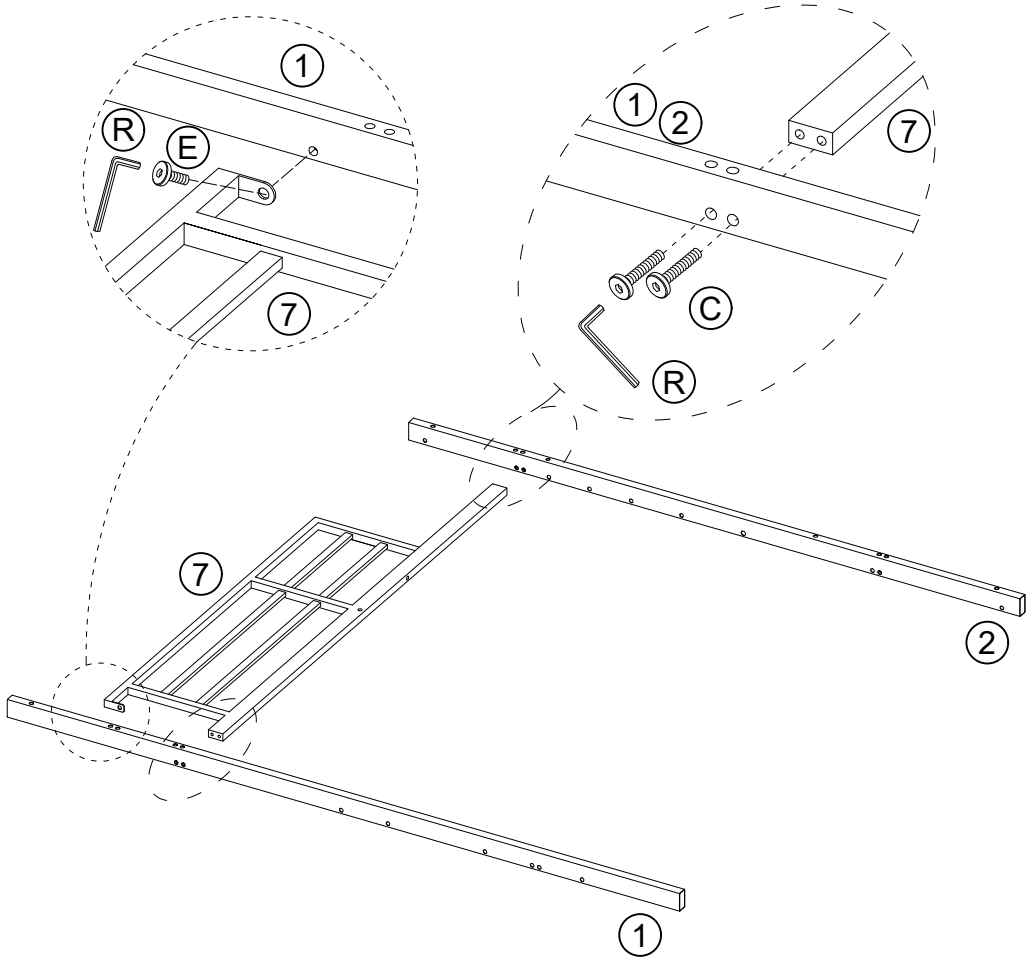

2

A

C		M8×45	4
E		M8×20	1
R		M5	1

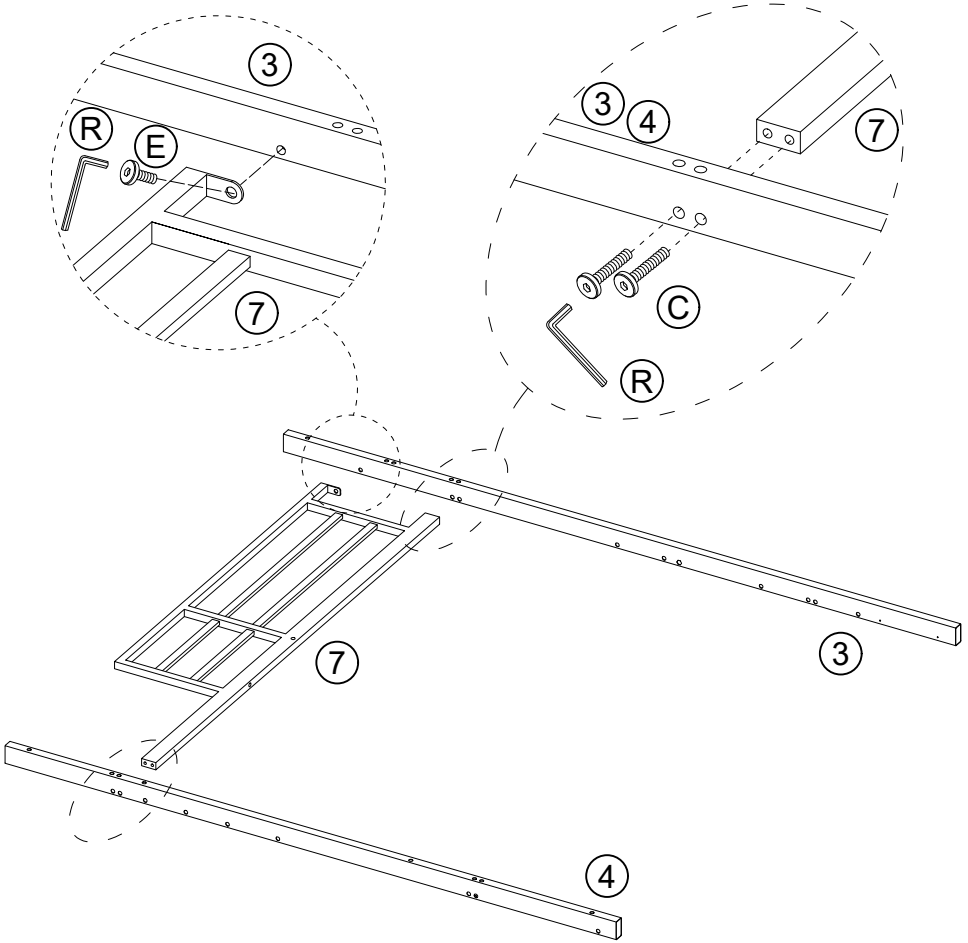

2

B

C		M8×45	8
E		M8×20	2
R		M5	1

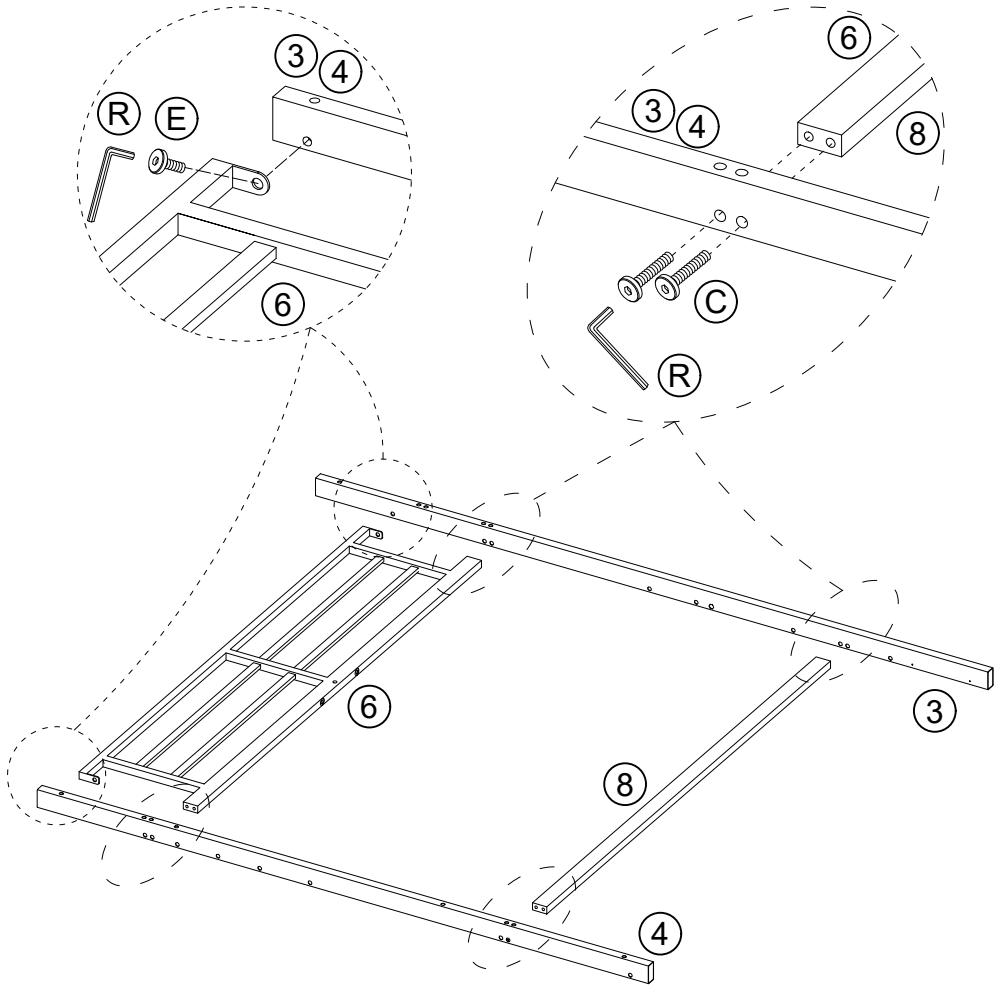

3

L		M6×15	8
S		M4	1

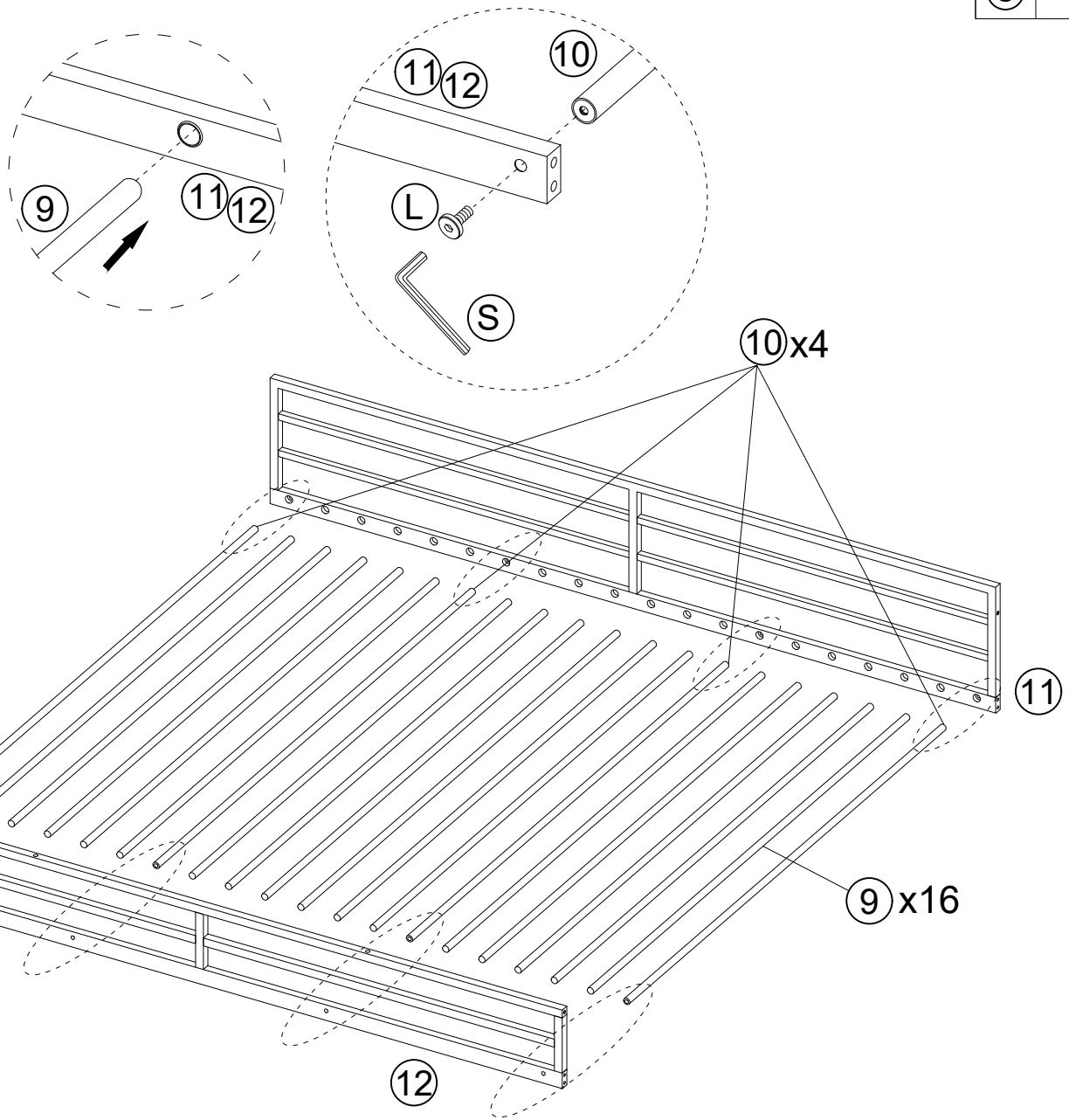

4

A

A	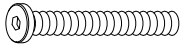	M8×70	8
B	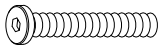	M8×65	4
R		M5	1

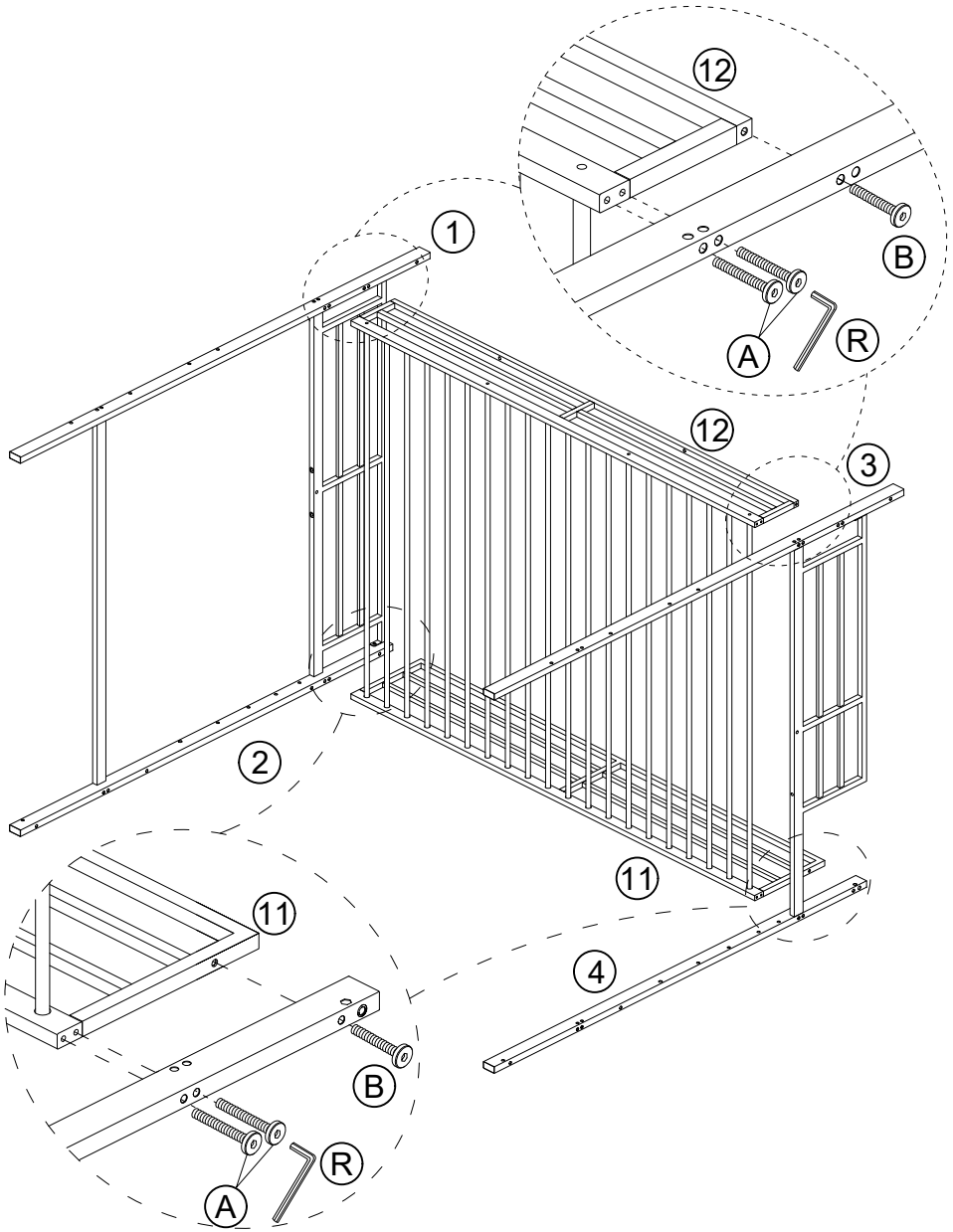

4

B

A	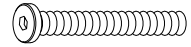	M8×70	8
B	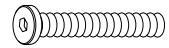	M8×65	4
R		M5	1

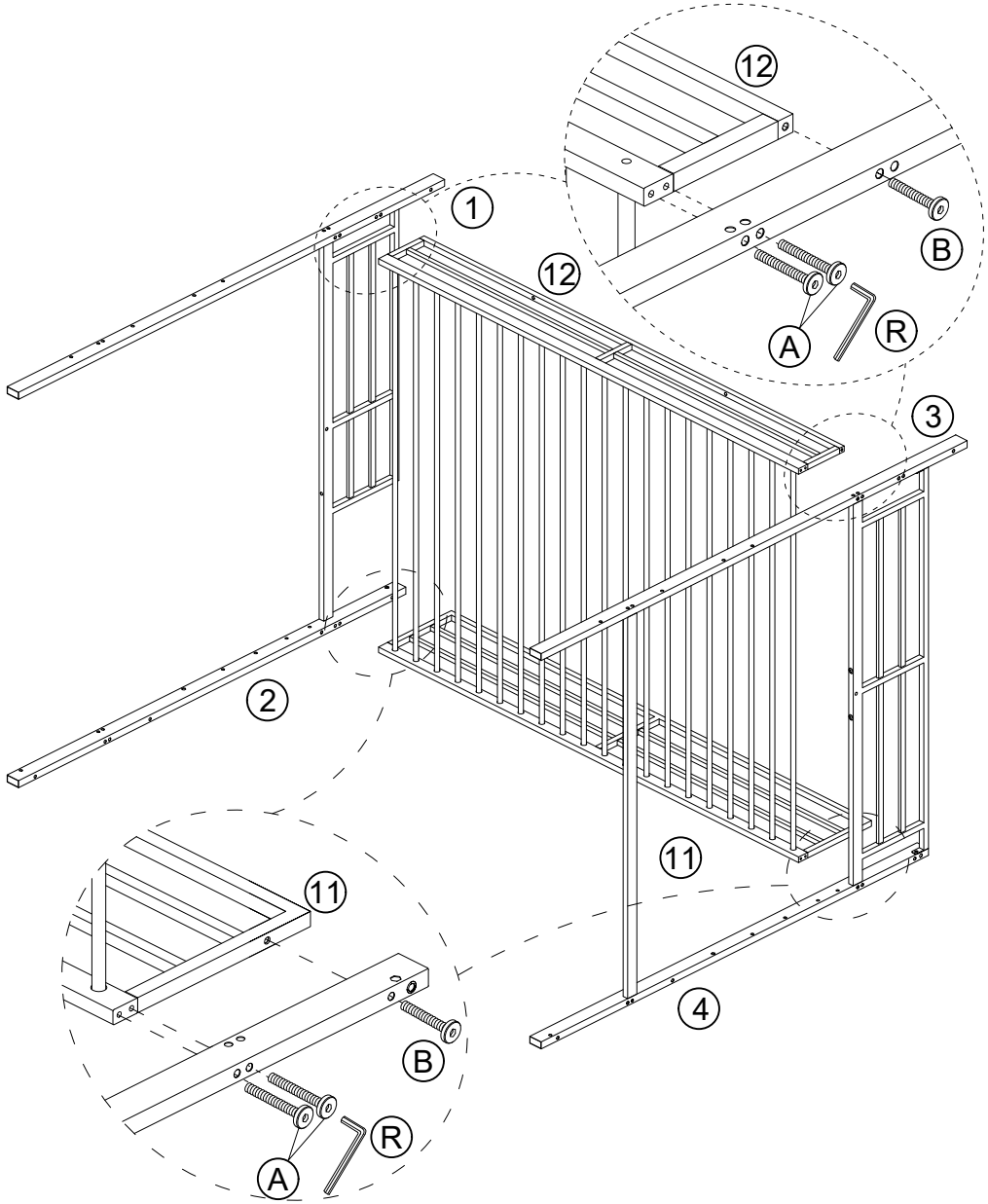

5

A

B	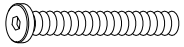	M8×65	4
D	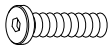	M8×35	2
R		M5	1

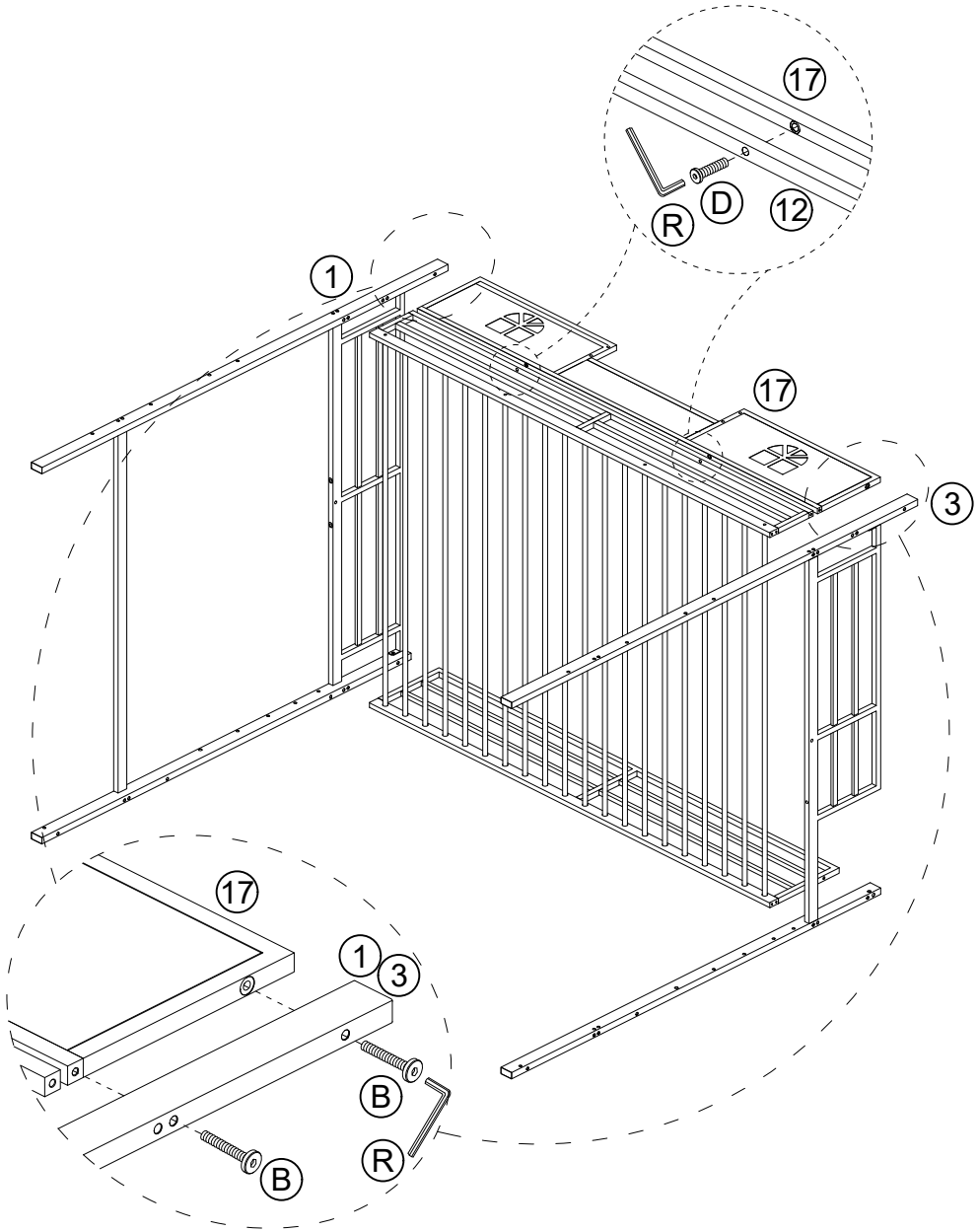

5

B

B	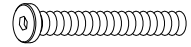	M8×65	4
D	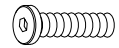	M8×35	2
R		M5	1

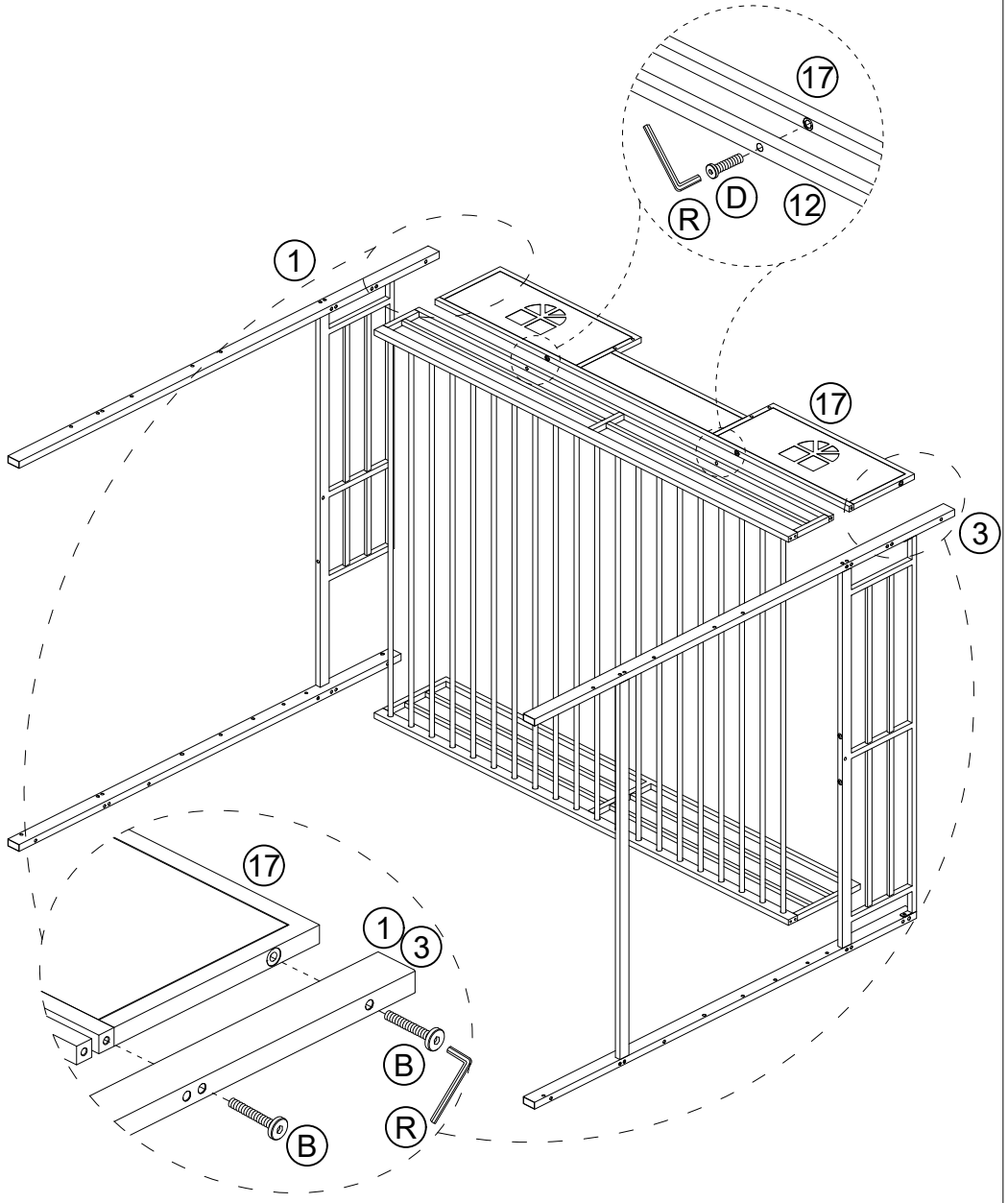

6

A

D		M8×35	2
R		M5	1

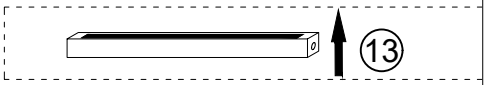

Tips: EVA foam upwards.

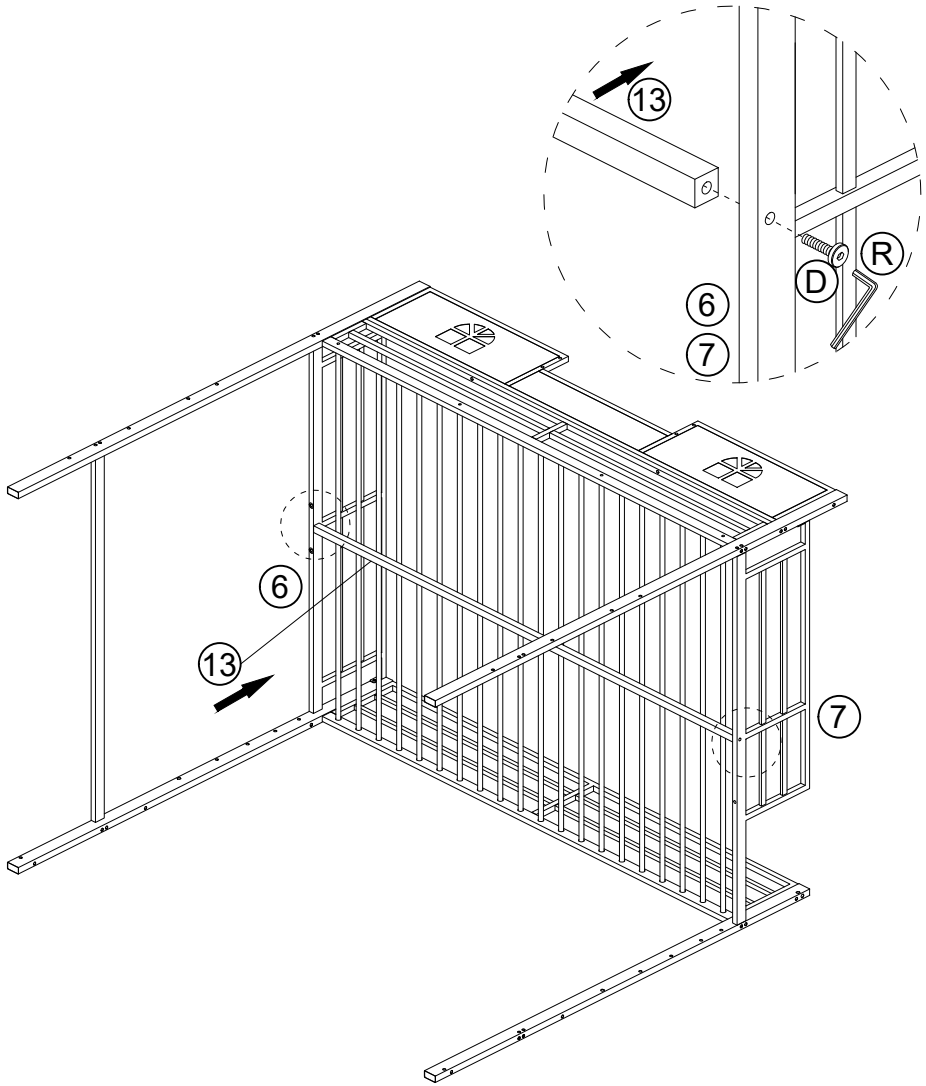

6

B

D		M8×35	2
R		M5	1

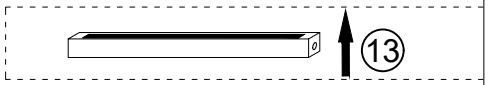

Tips: EVA foam upwards.

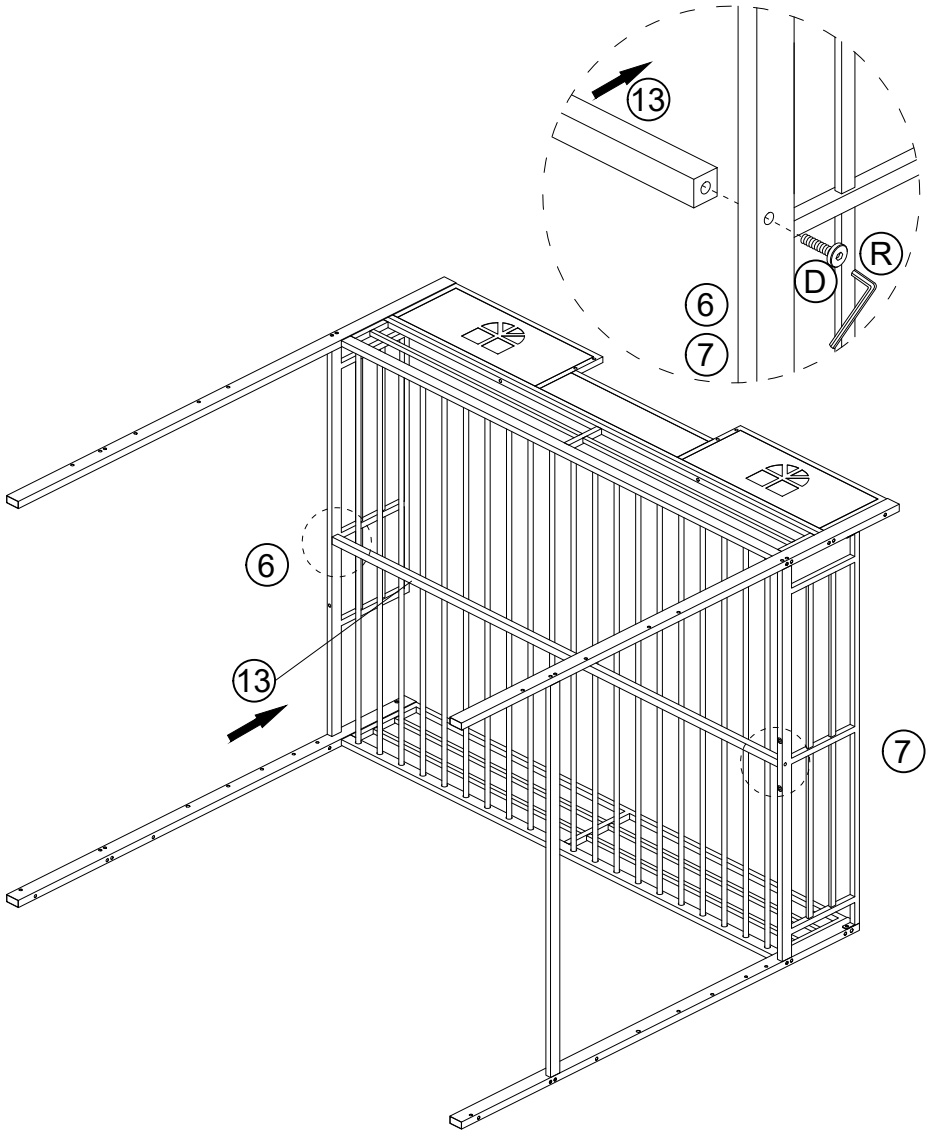

7

A

A		M8×70	4
R		M5	1

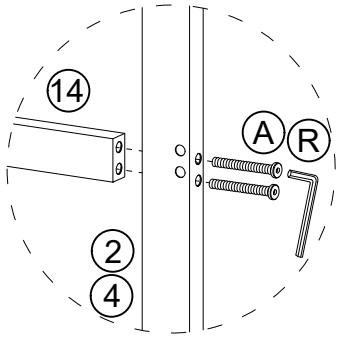

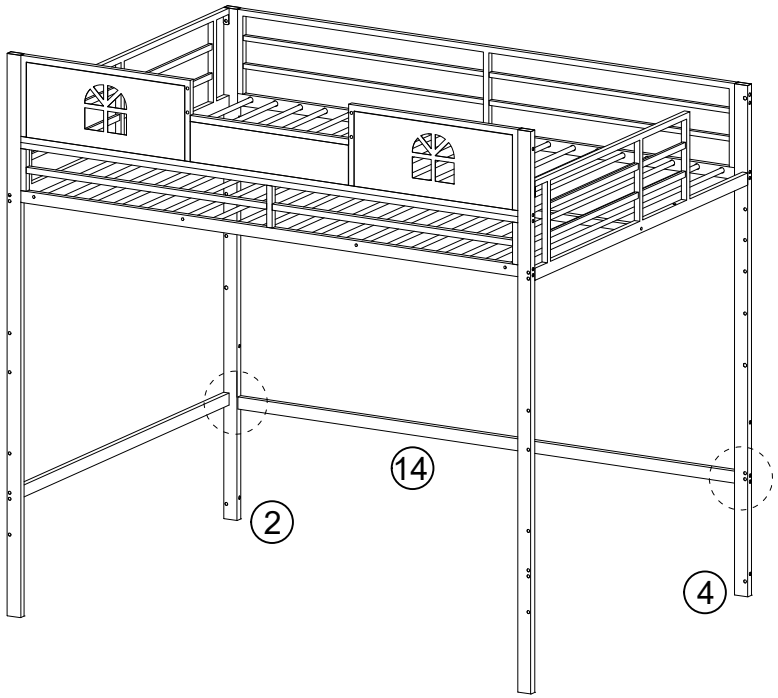

7

B

A		M8×70	4
R		M5	1

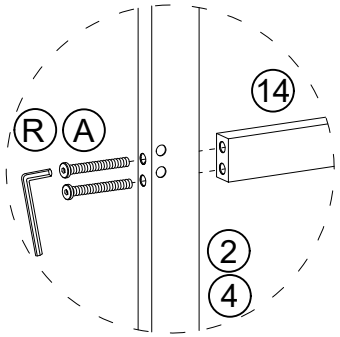

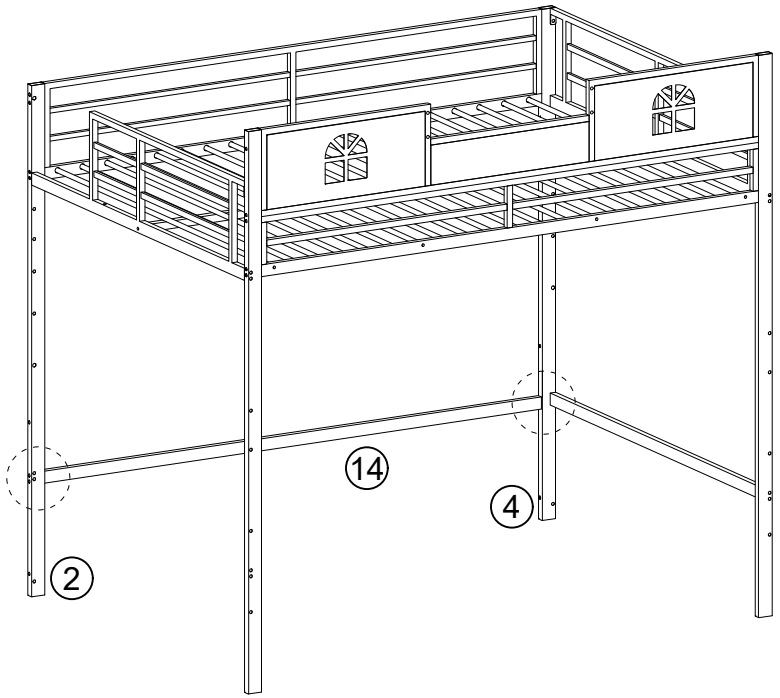

8

M		M6×12	2
S		M4	1

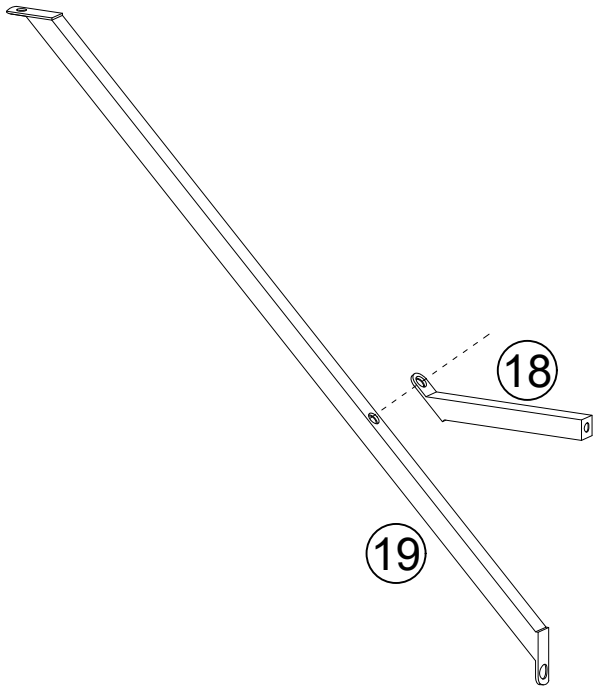

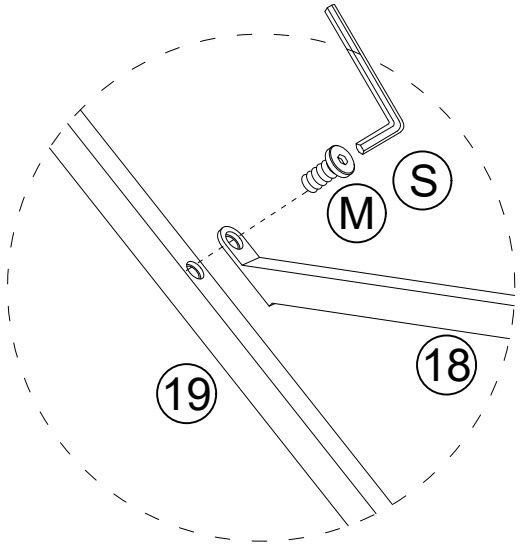

×2

9

A

E		M8×20	4
R		M5	1

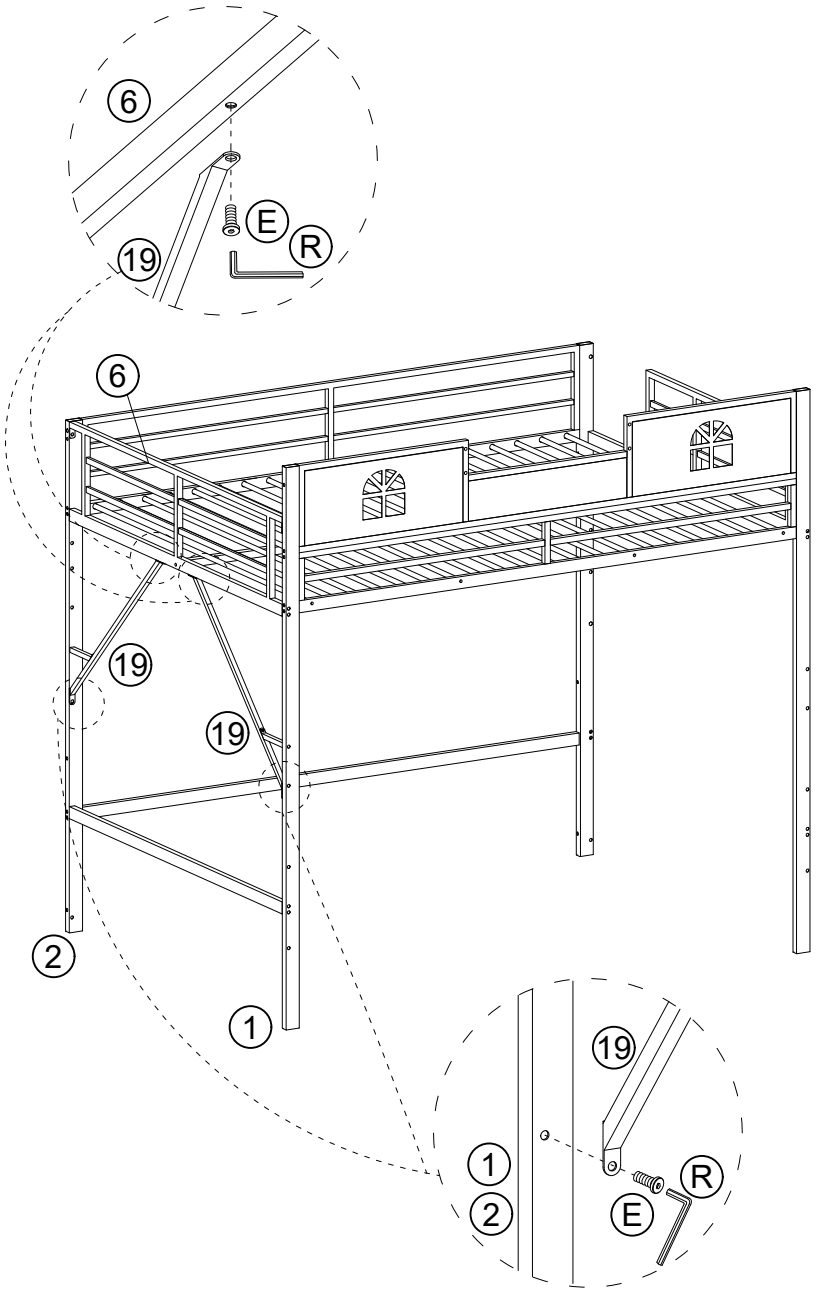

9

B

E		M8×20	4
R		M5	1

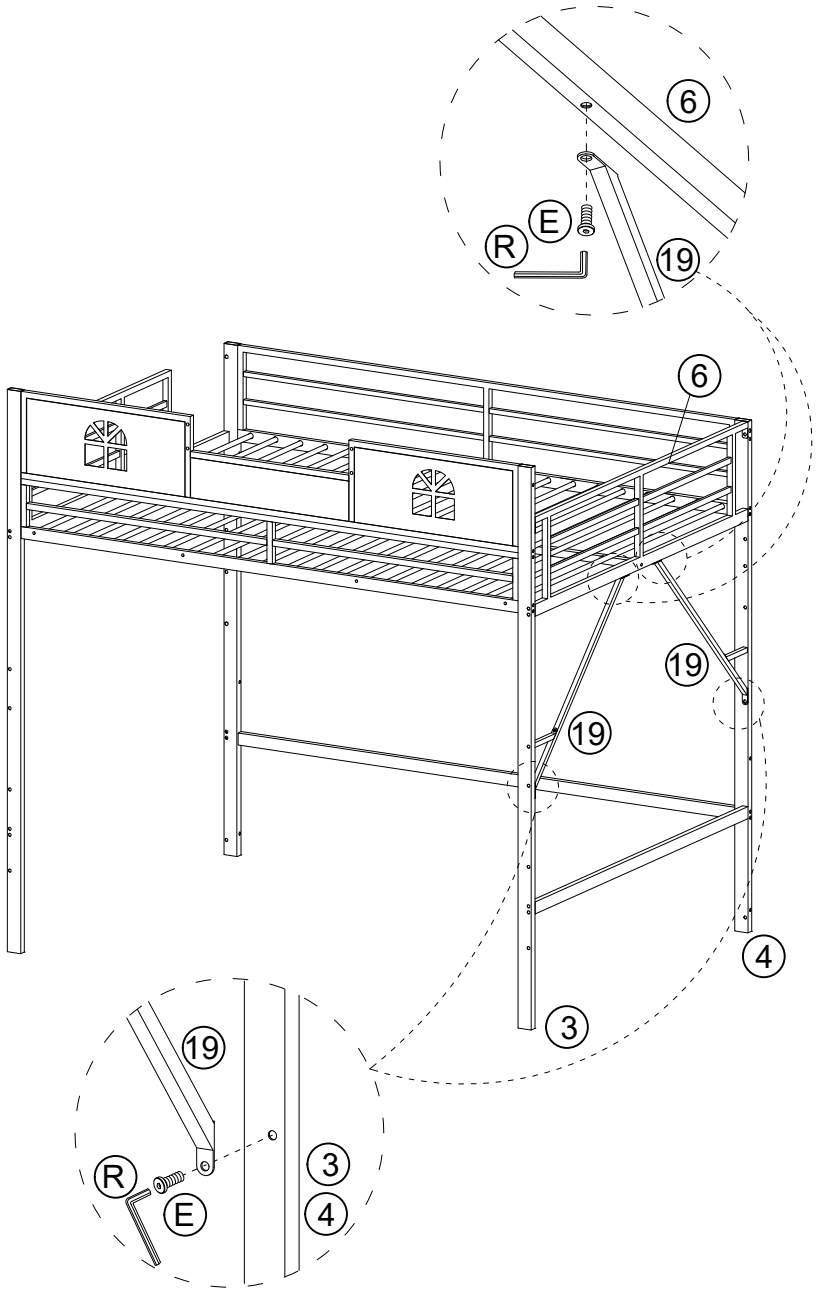

10

A

F		M6×40	2
S		M4	1

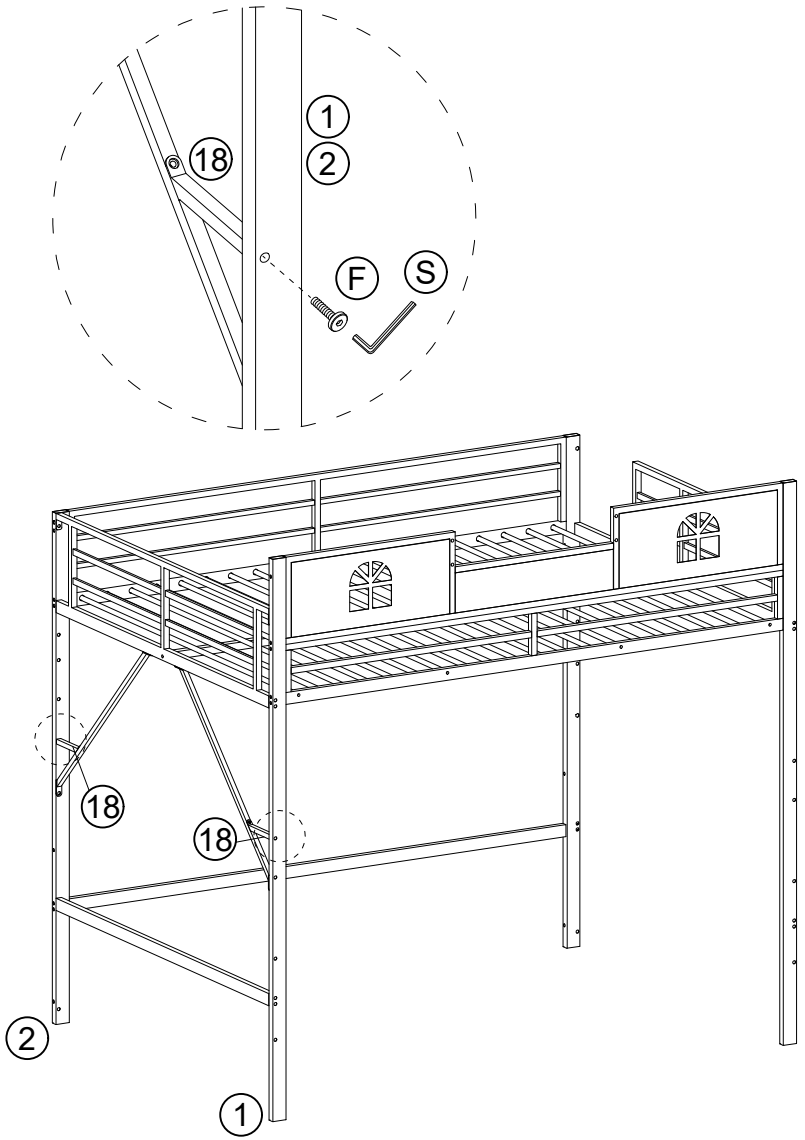

10

B

F		M6×40	2
S		M4	1

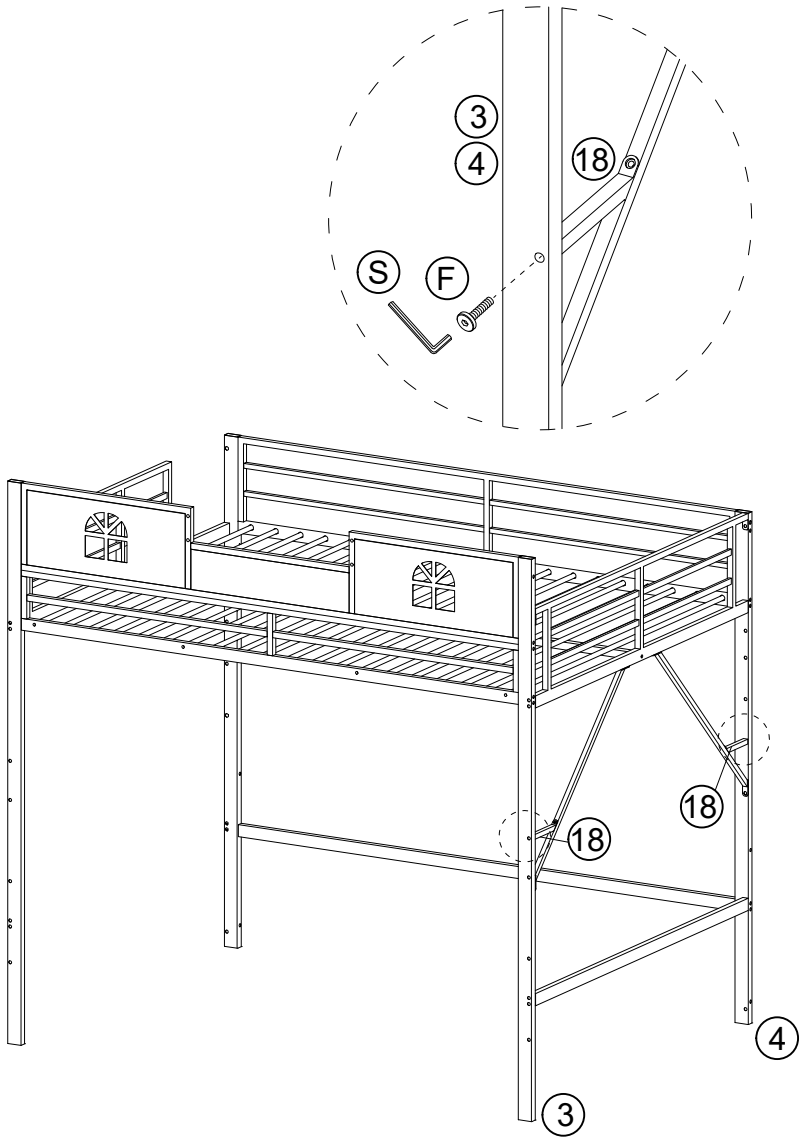

11

A

B	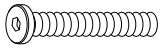	M8×65	1
R		M5	1

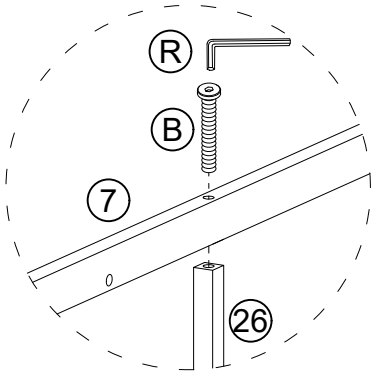

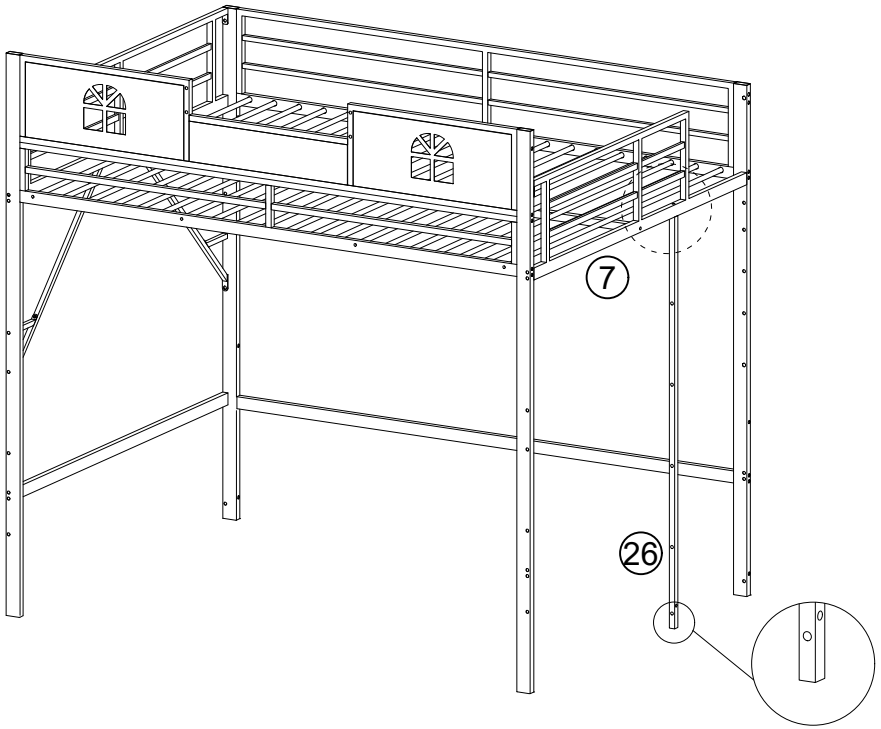

11

B

B		M8×65	1
R		M5	1

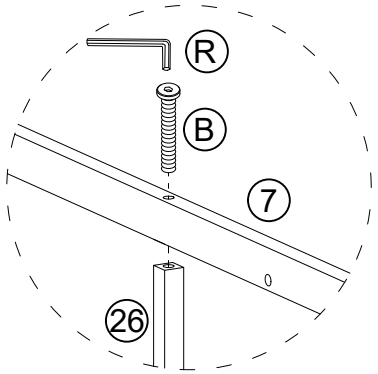

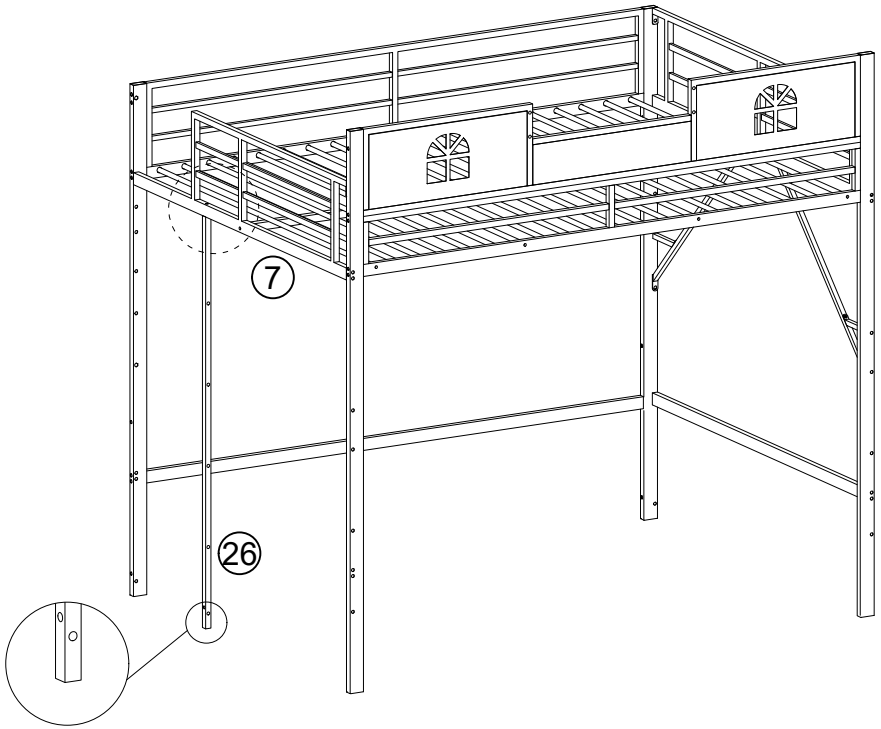

12

A

E		M8×20	2
R		M5	1

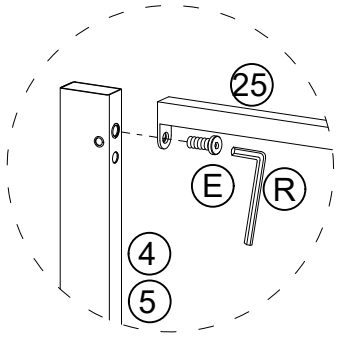

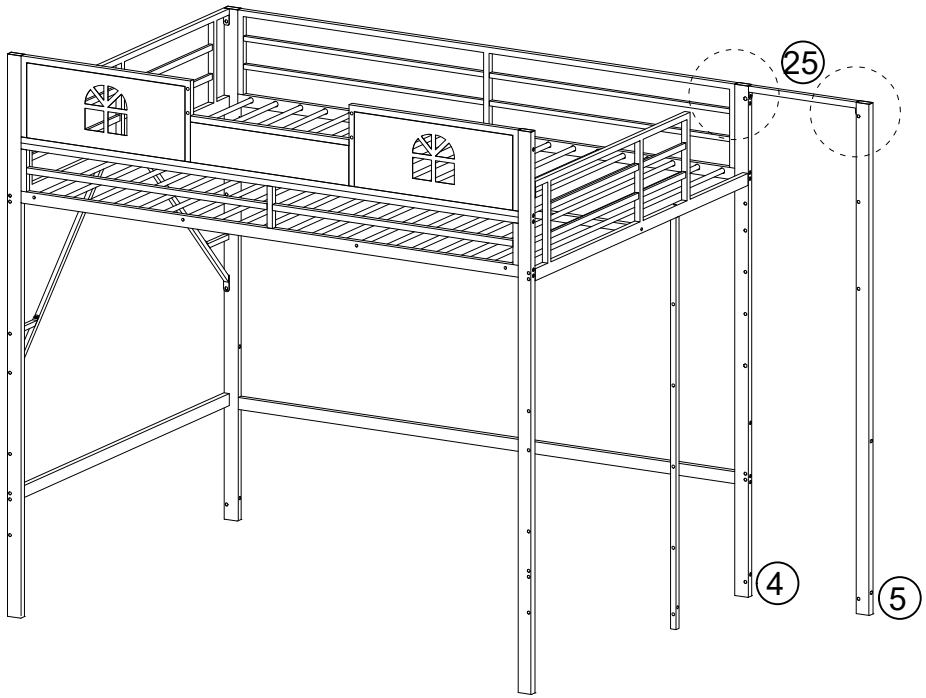

12

B

E		M8×20	2
R		M5	1

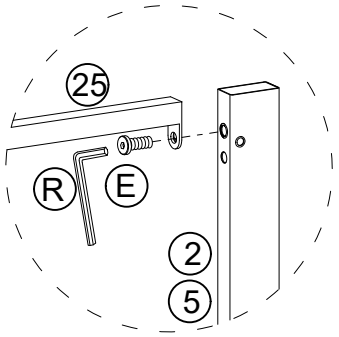

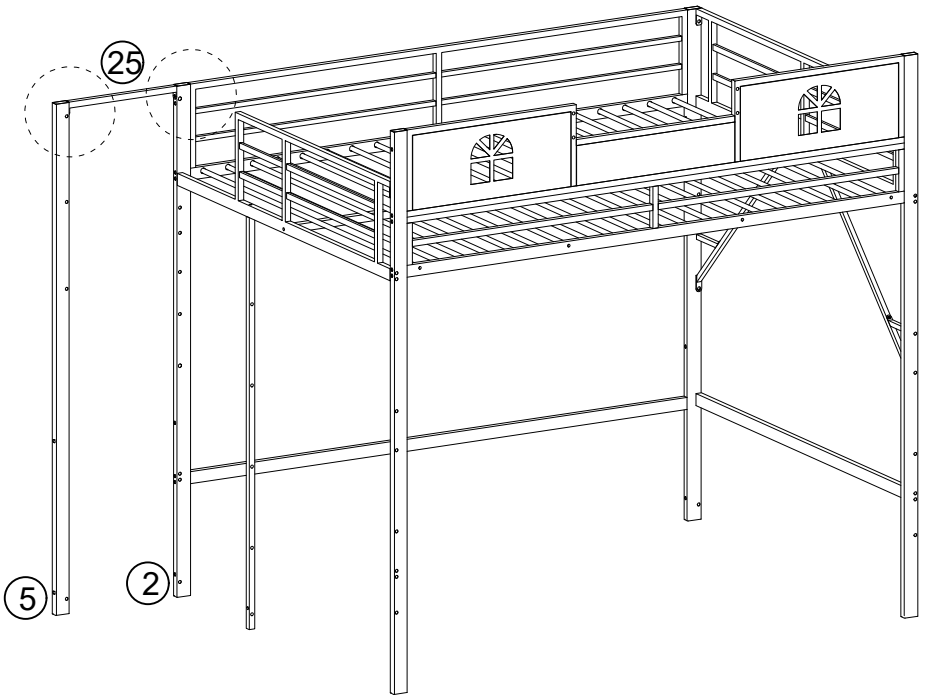

13

A

K		M6×70	4
S		M4	1

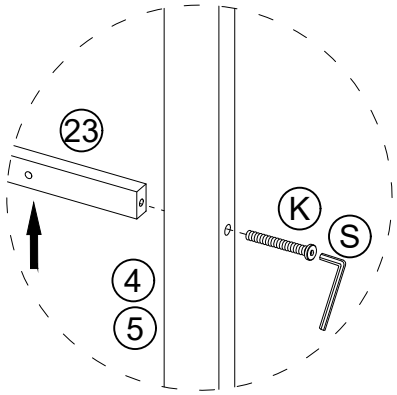

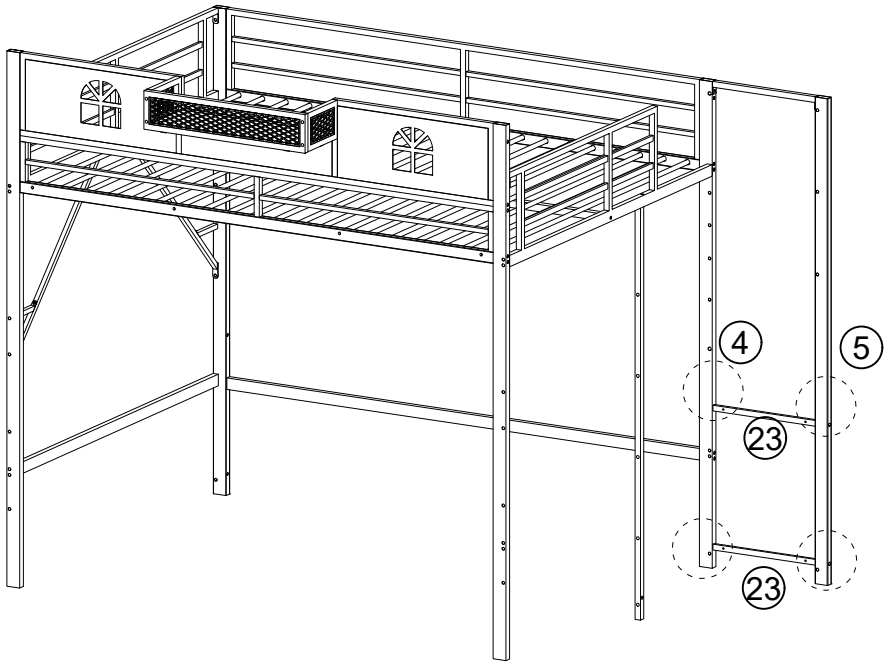

13

B

K		M6×70	4
S		M4	1

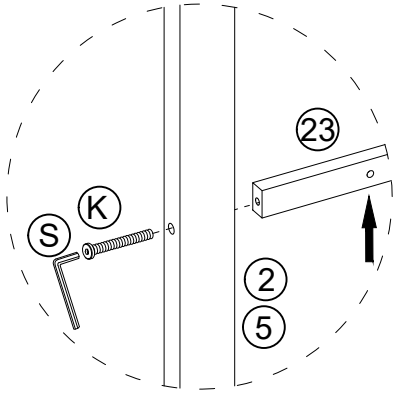

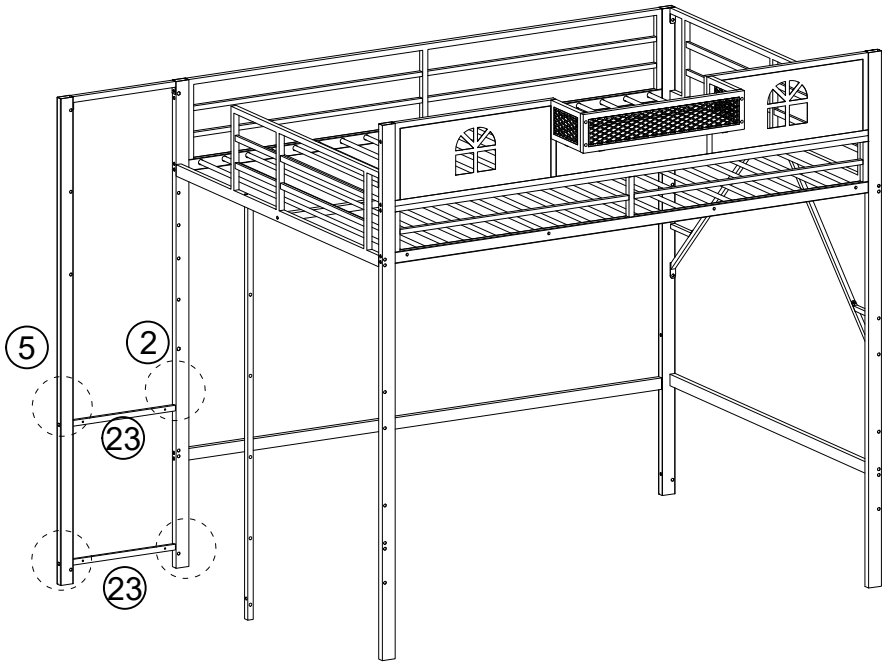

14

A

L		M6×15	4
S		M4	1

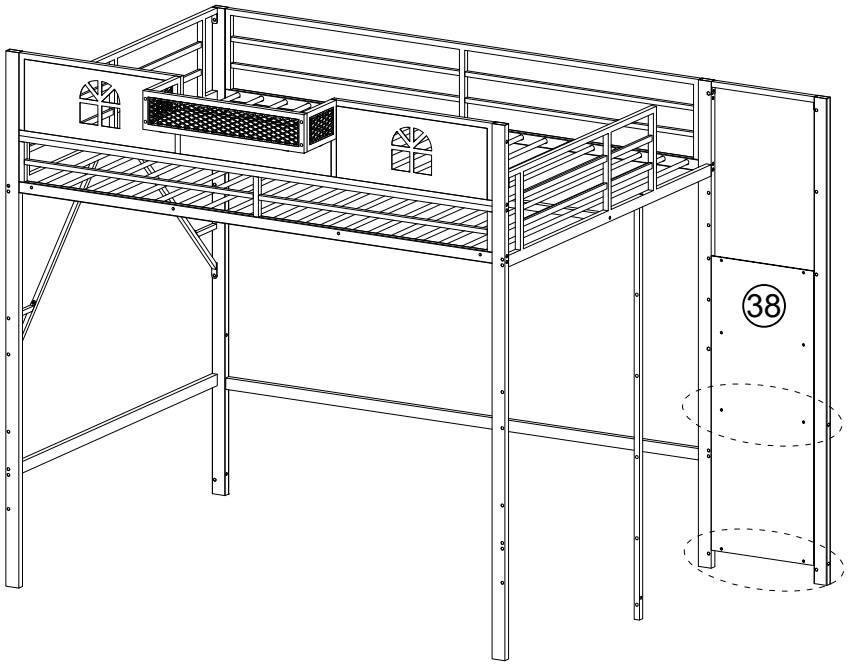

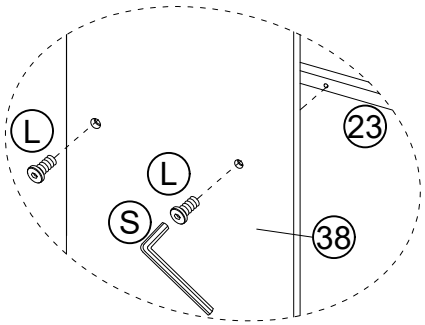

14

B

L		M6×15	4
S		M4	1

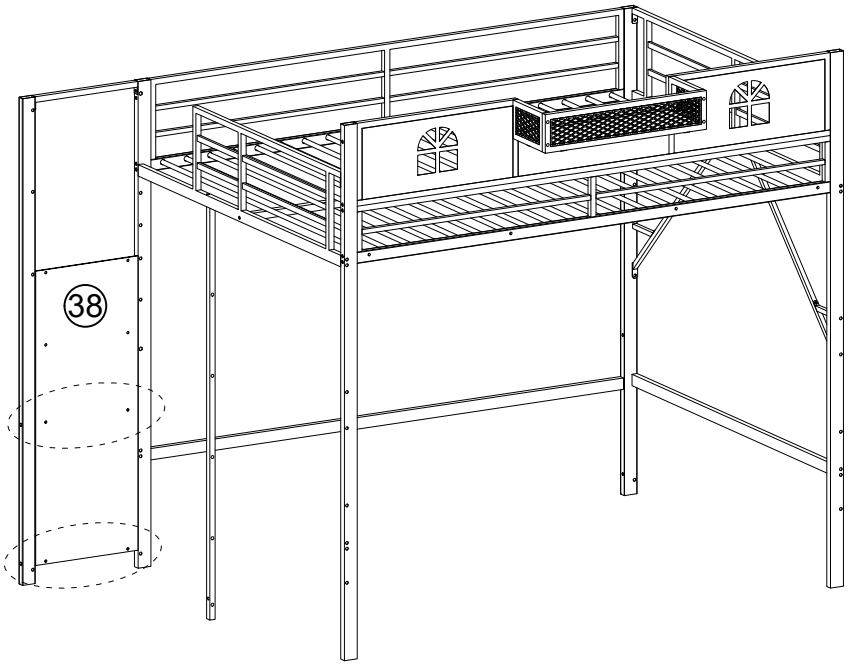

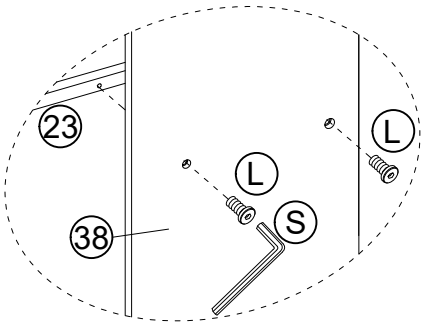

15

A

C		M8×45	1
D		M8×35	1
R		M5	1

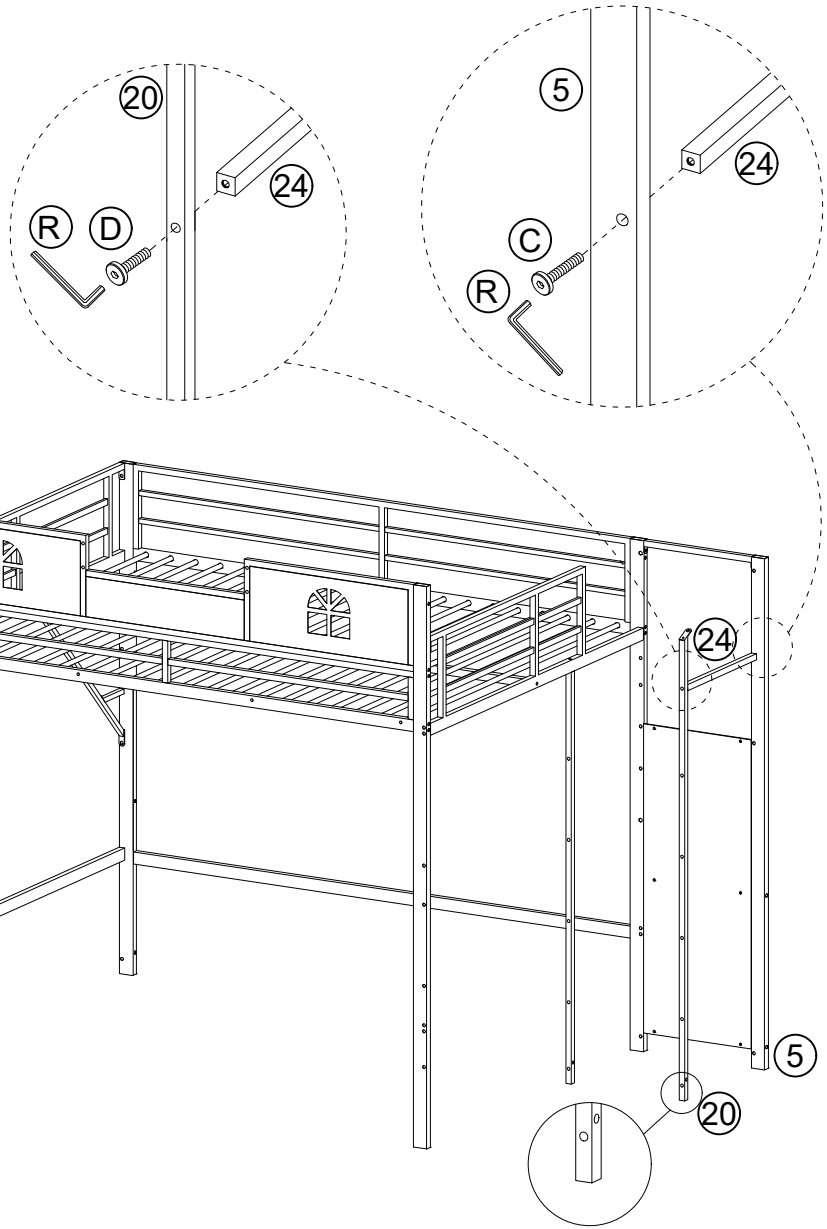

15

B

C		M8×45	1
D		M8×35	1
R		M5	1

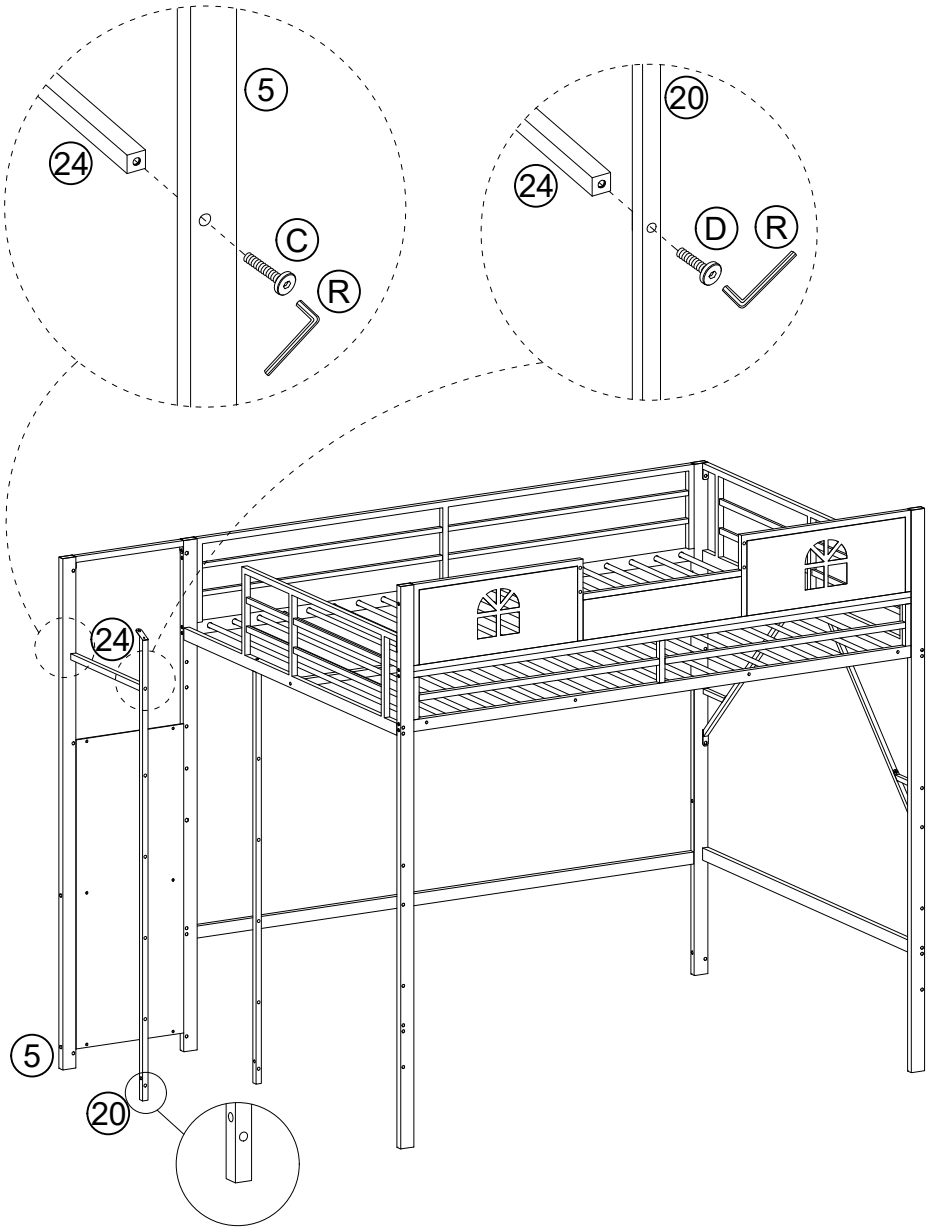

16

A

D		M8×35	2
R		M5	1

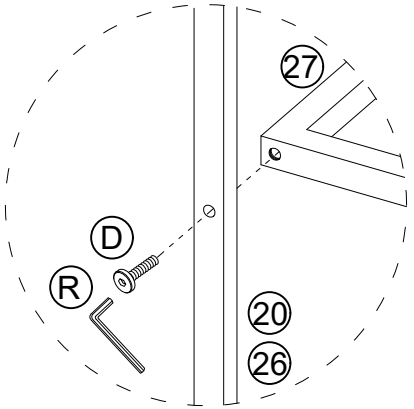

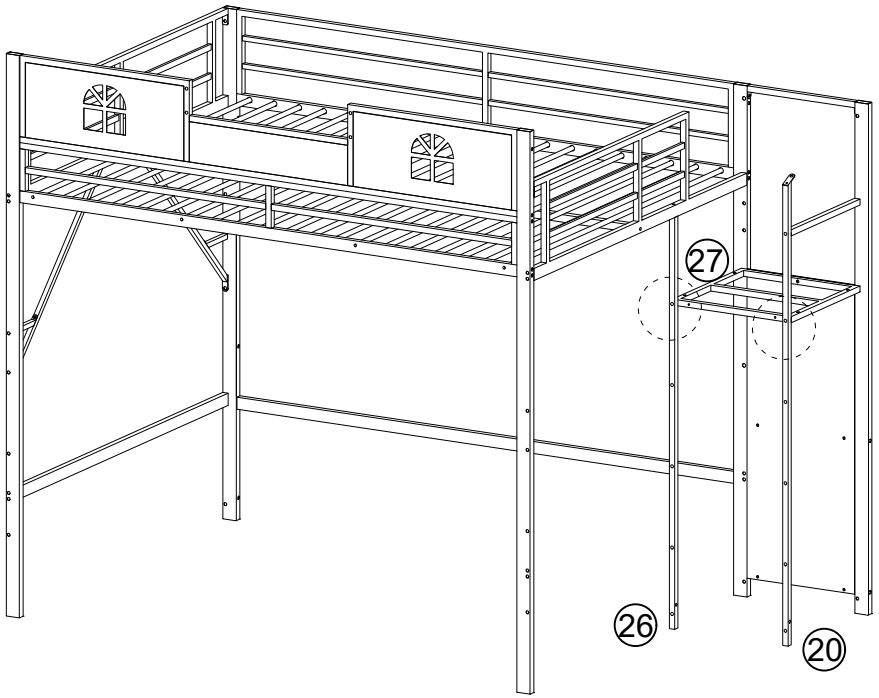

16

B

D		M8×35	2
R		M5	1

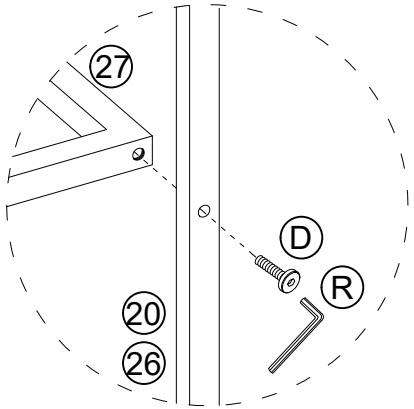

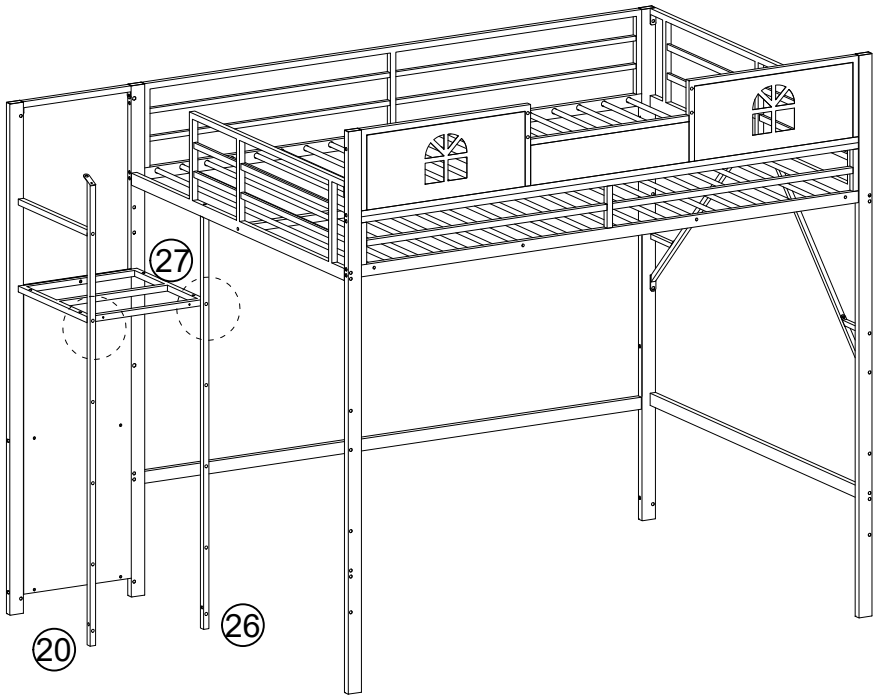

17

A

C		M8×45	2
R		M5	1
L		M6×15	2
S		M4	1

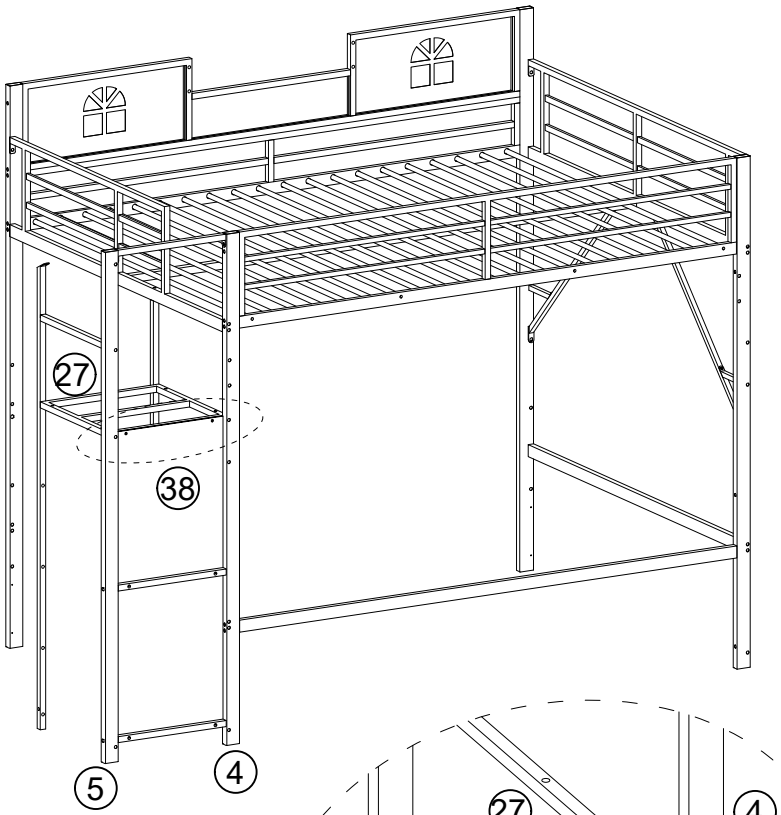

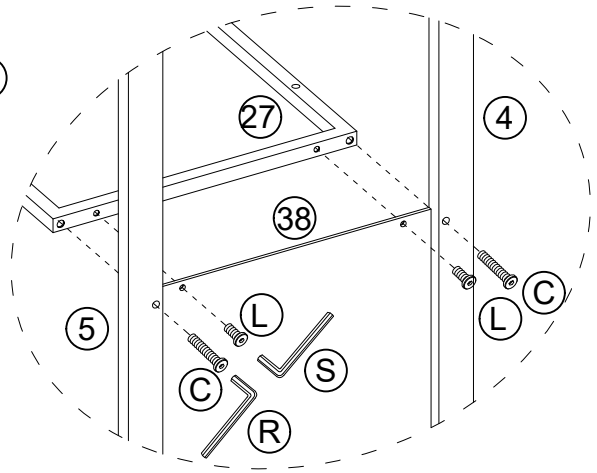

17

B

C		M8×45	2
R		M5	1
L		M6×15	2
S		M4	1

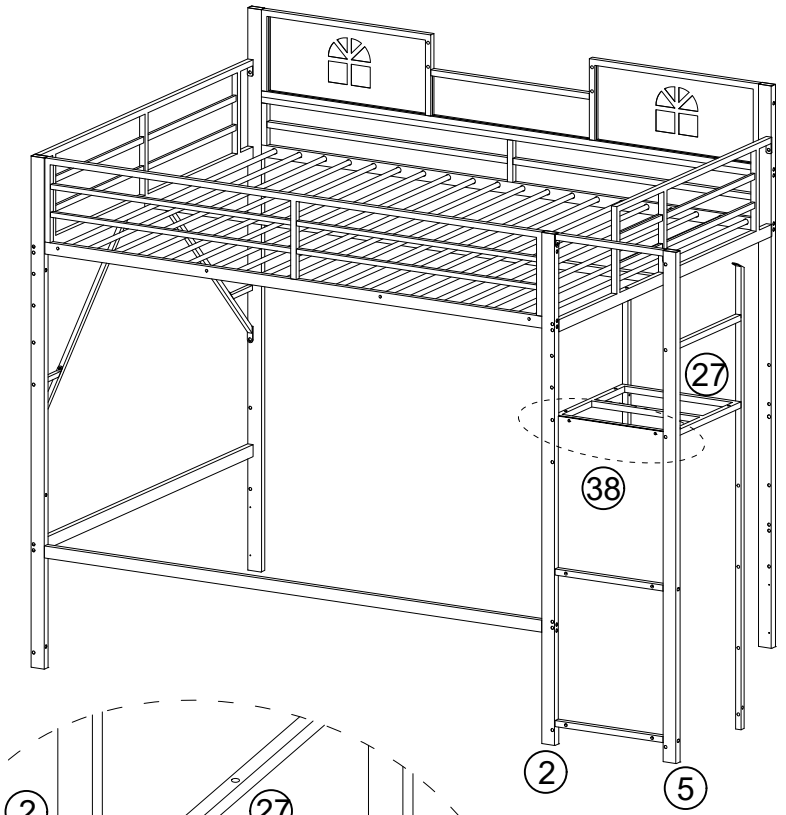

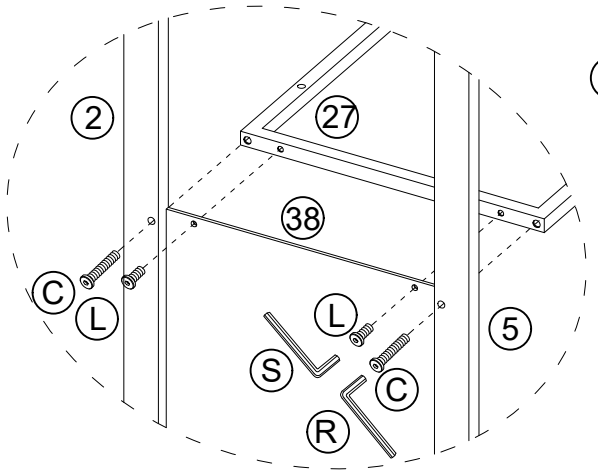

18

A

F		M6×40	2
S		M4	1

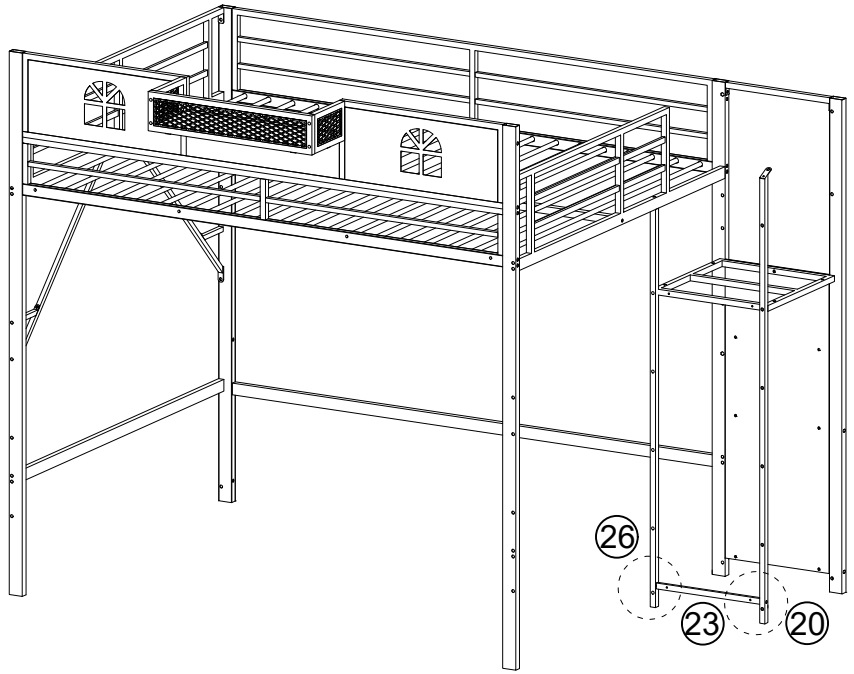

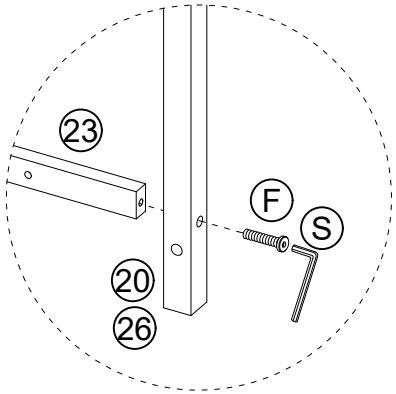

18

B

F		M6×40	2
S		M4	1

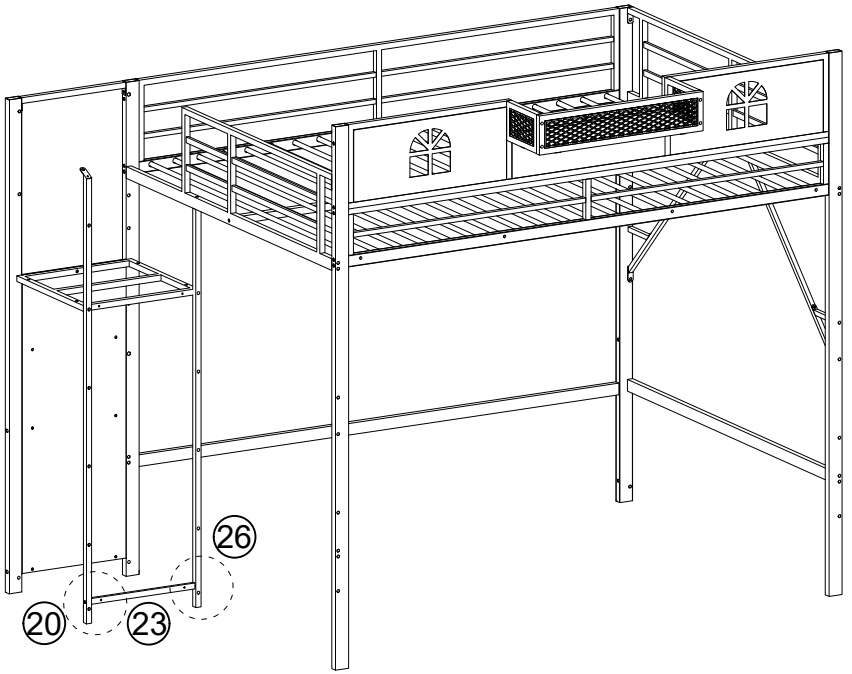

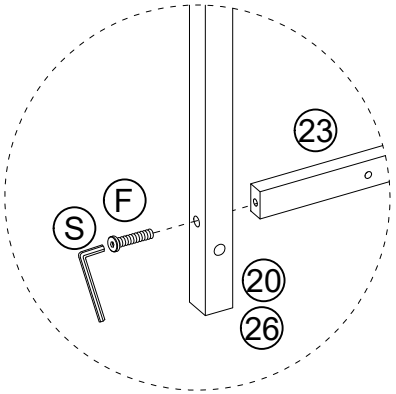

19

A

C		M8×45	2
D		M8×35	2
R		M5	1

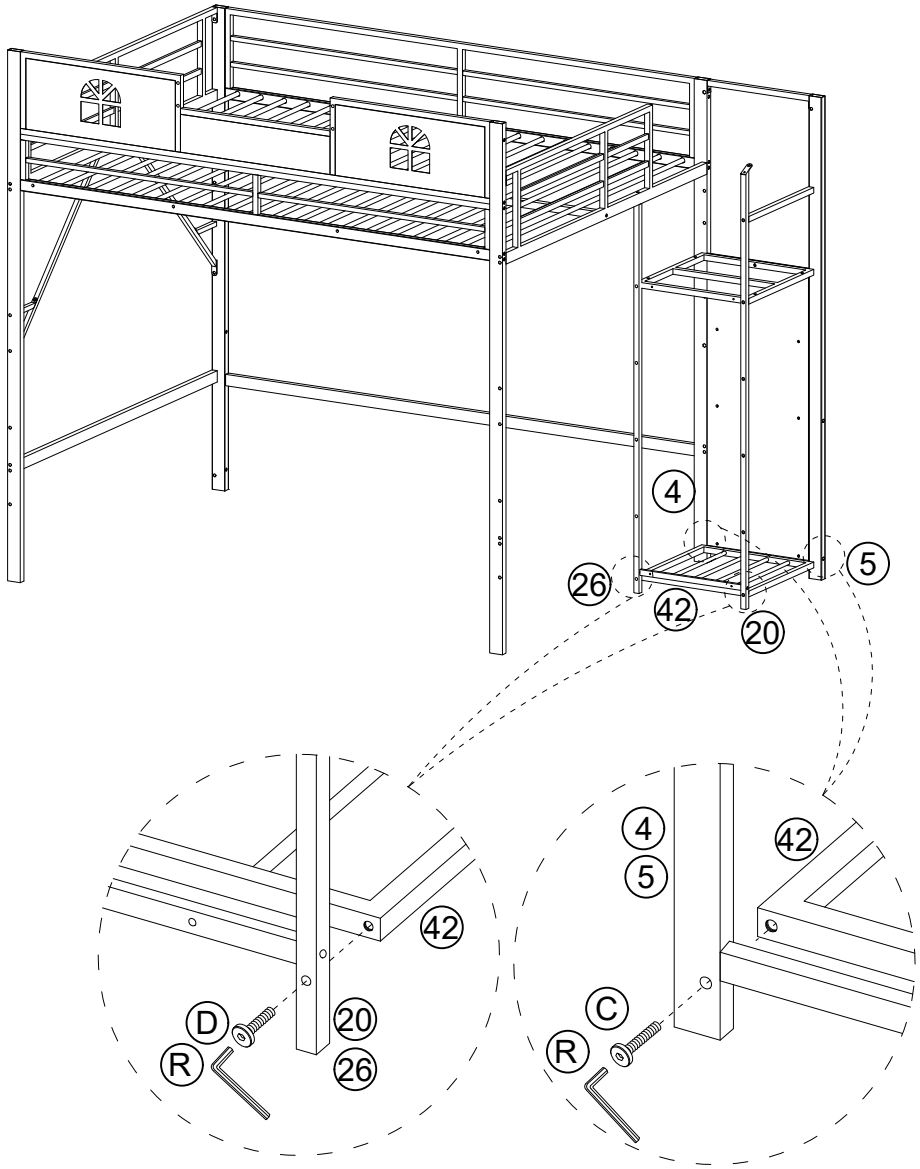

19

B

C		M8×45	2
D		M8×35	2
R		M5	1

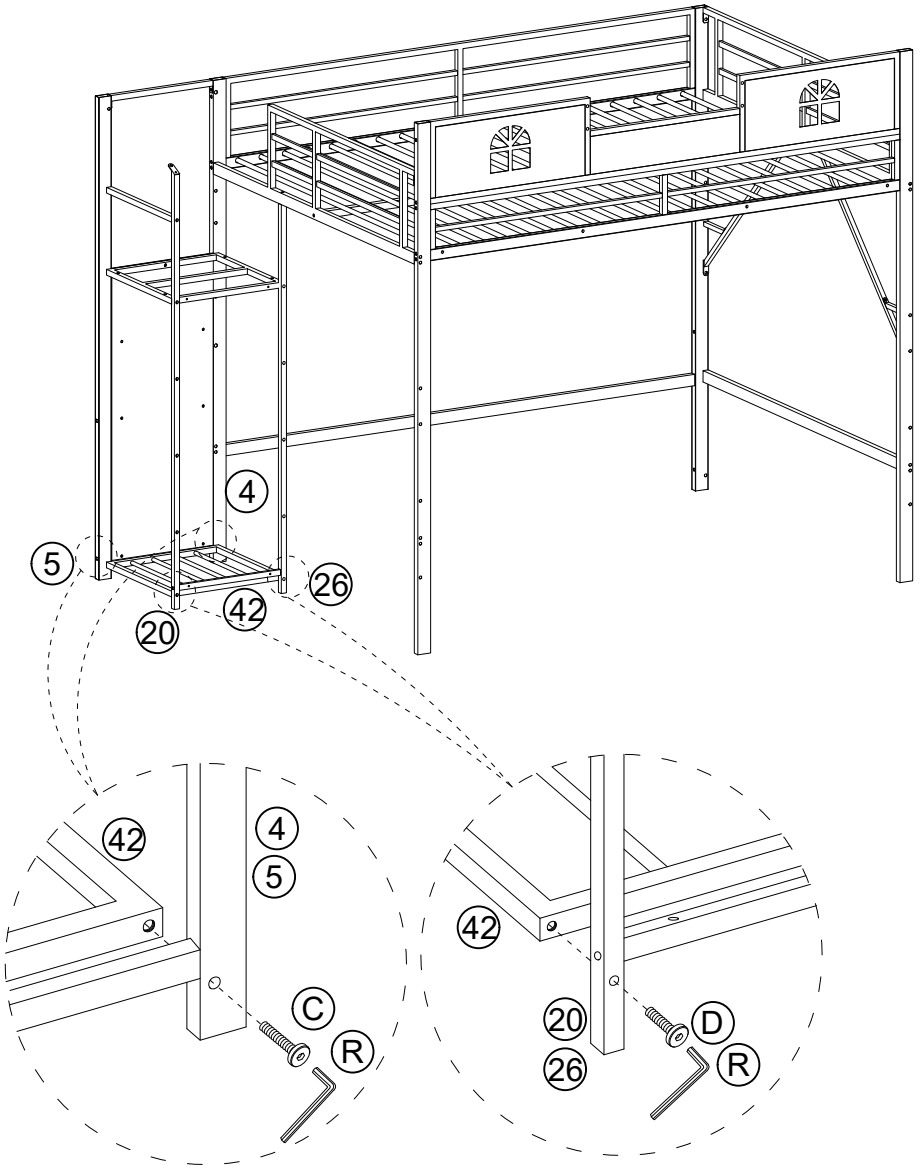

20

A

E		M8×20	2
R		M5	1

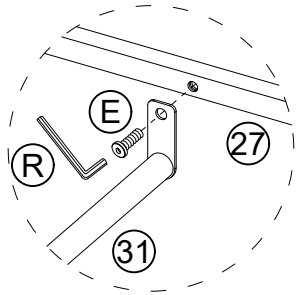

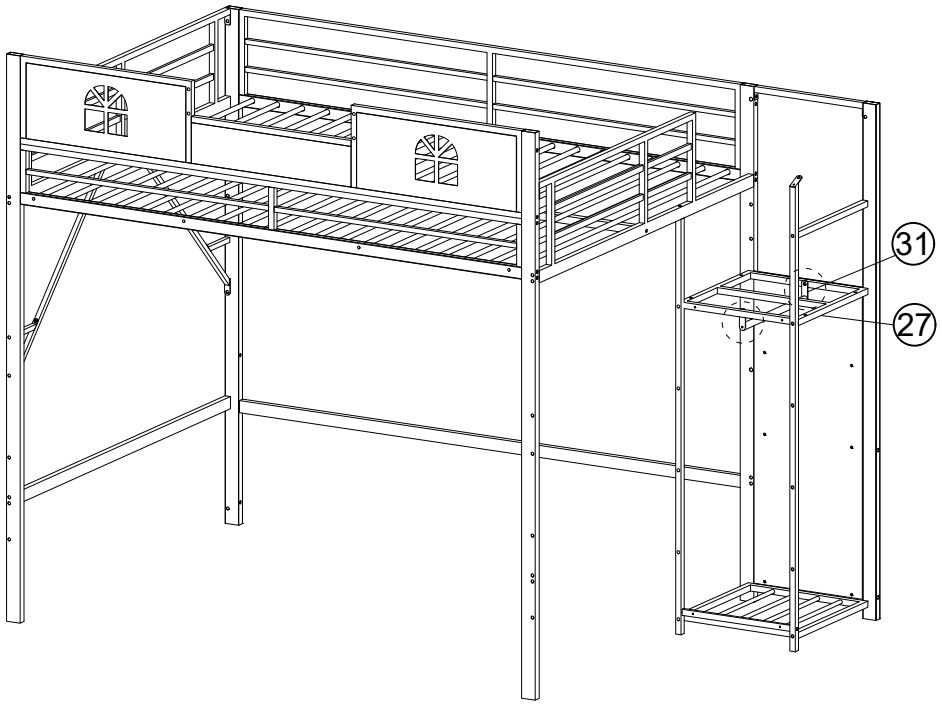

20

B

E		M8×20	2
R		M5	1

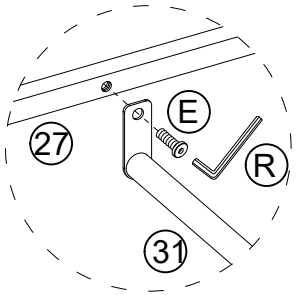

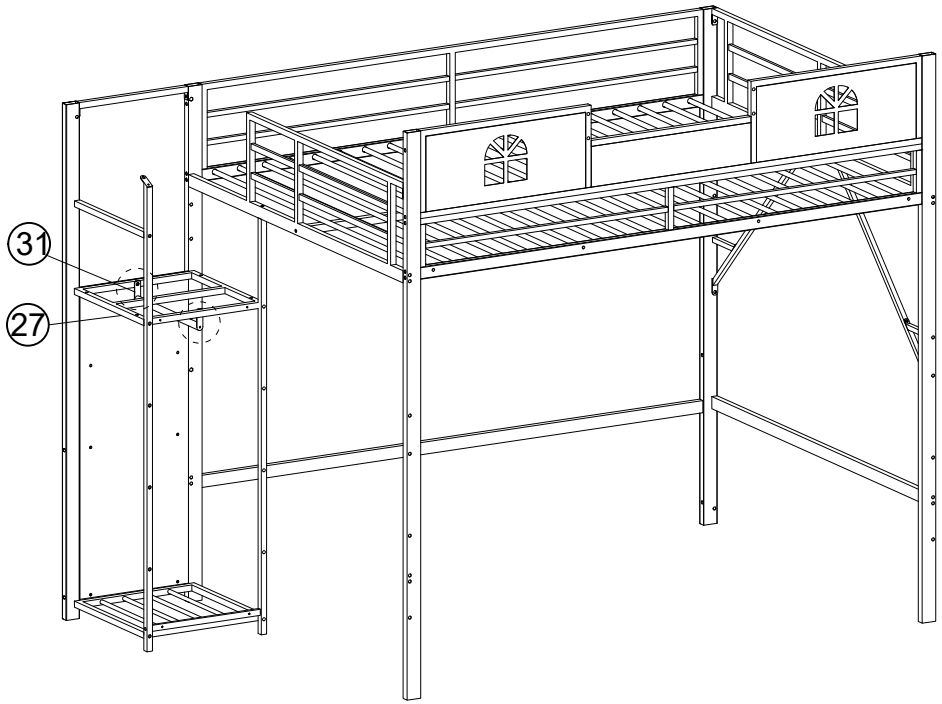

21

A

G		M6×30	2
L		M6×15	2
S		M4	1

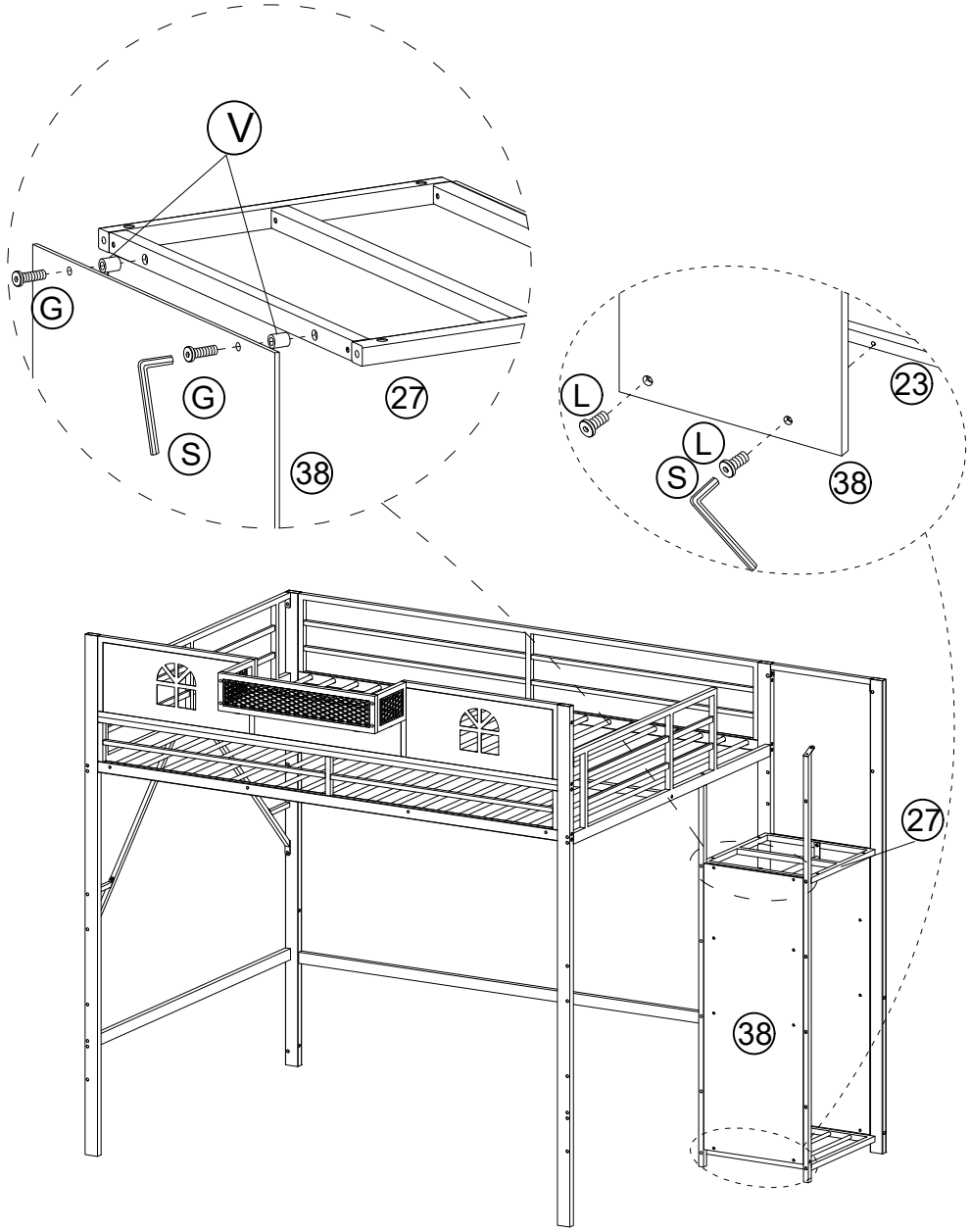

21

B

G		M6×30	2
L		M6×15	2
S		M4	1

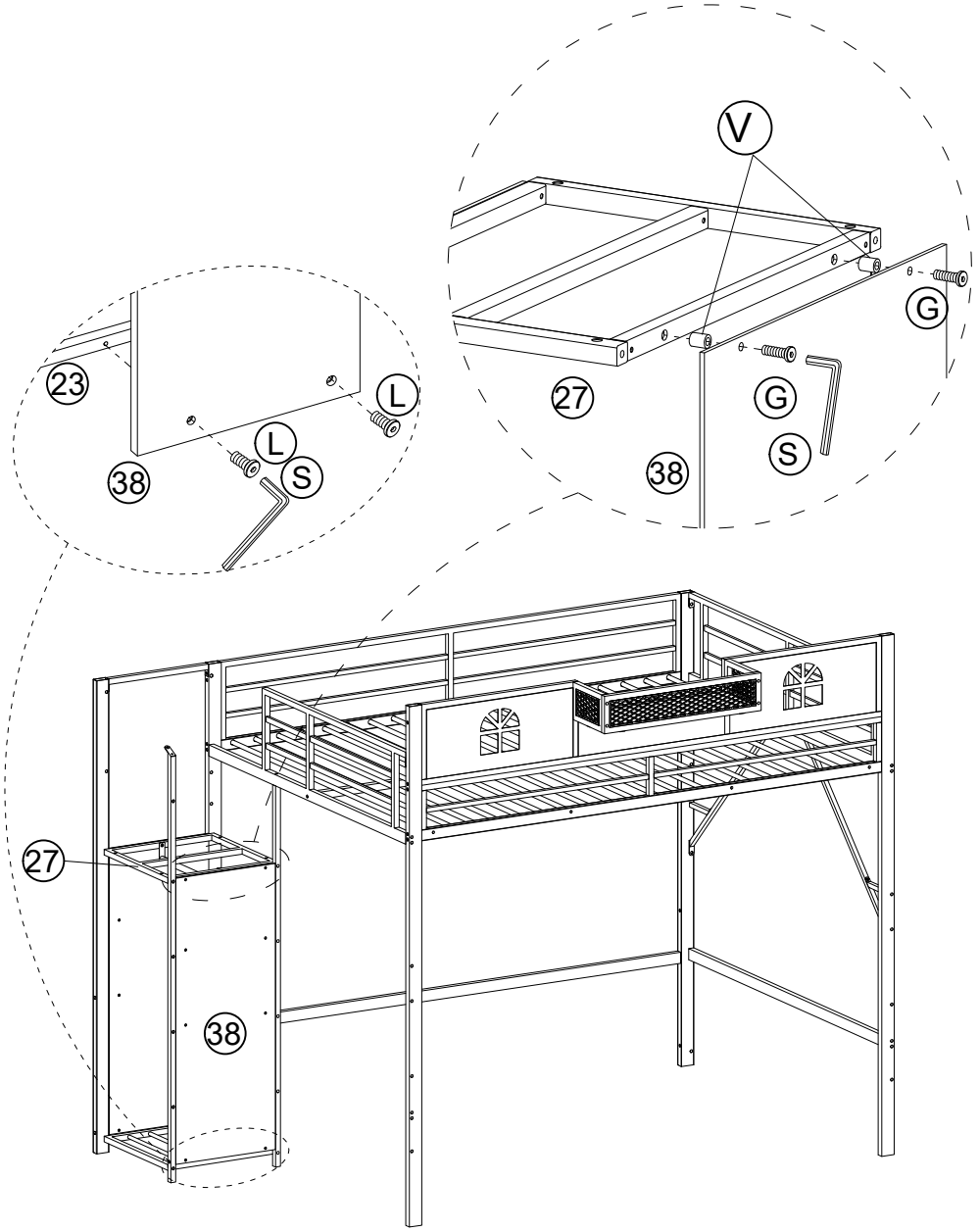

22

A

G	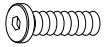	M6×30	4
S		M4	1

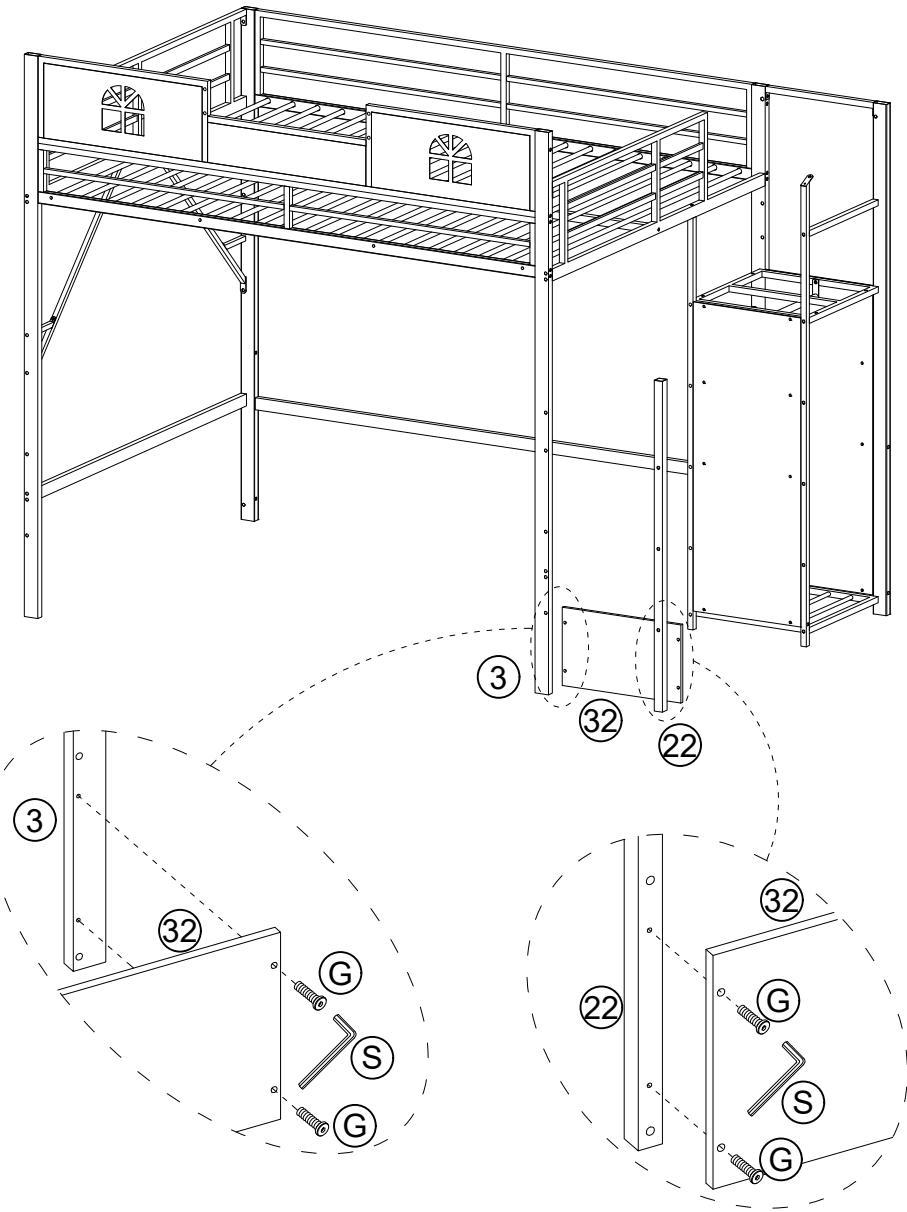

22

B

G		M6×30	4
S		M4	1

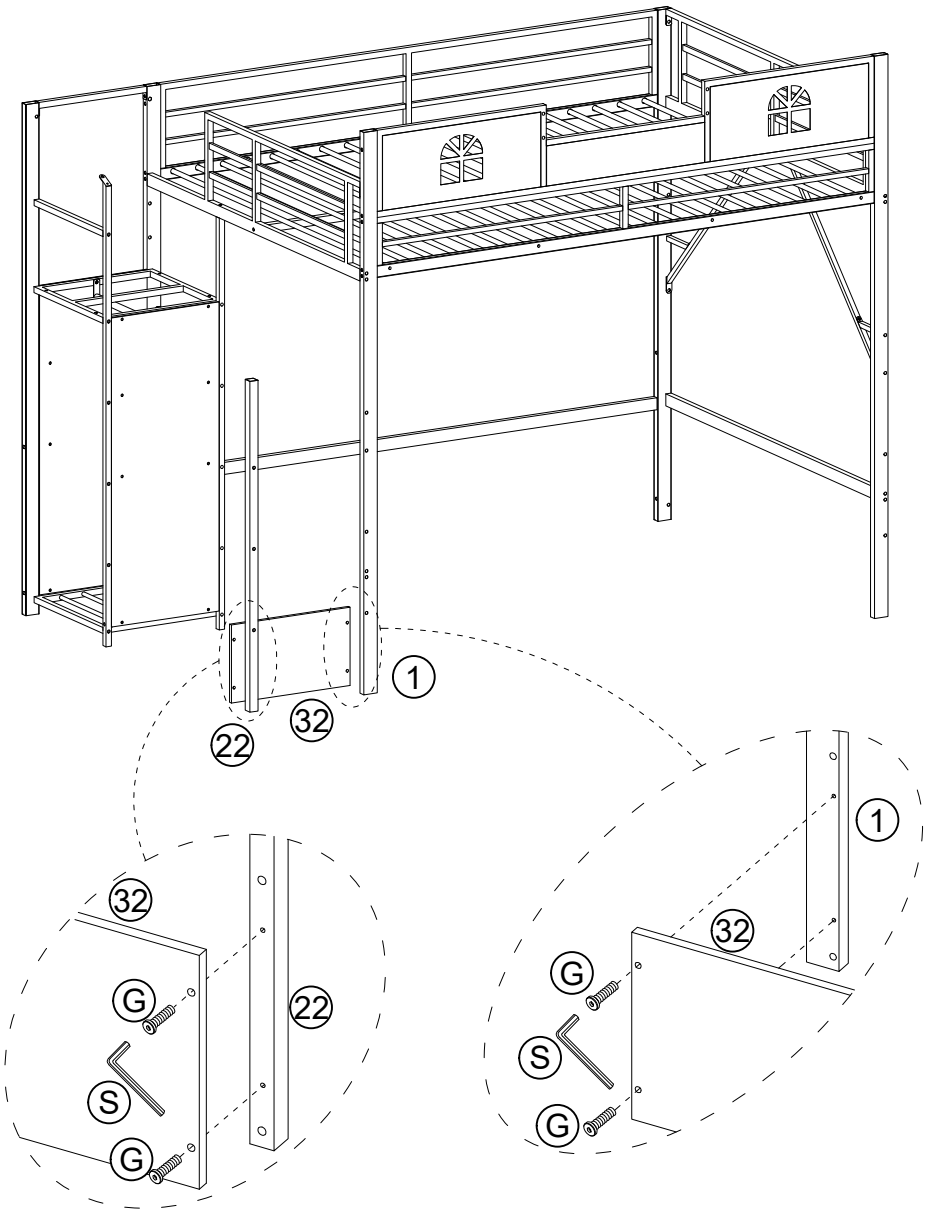

23

A

C		M8×45	2
D		M8×35	2
R		M5	1

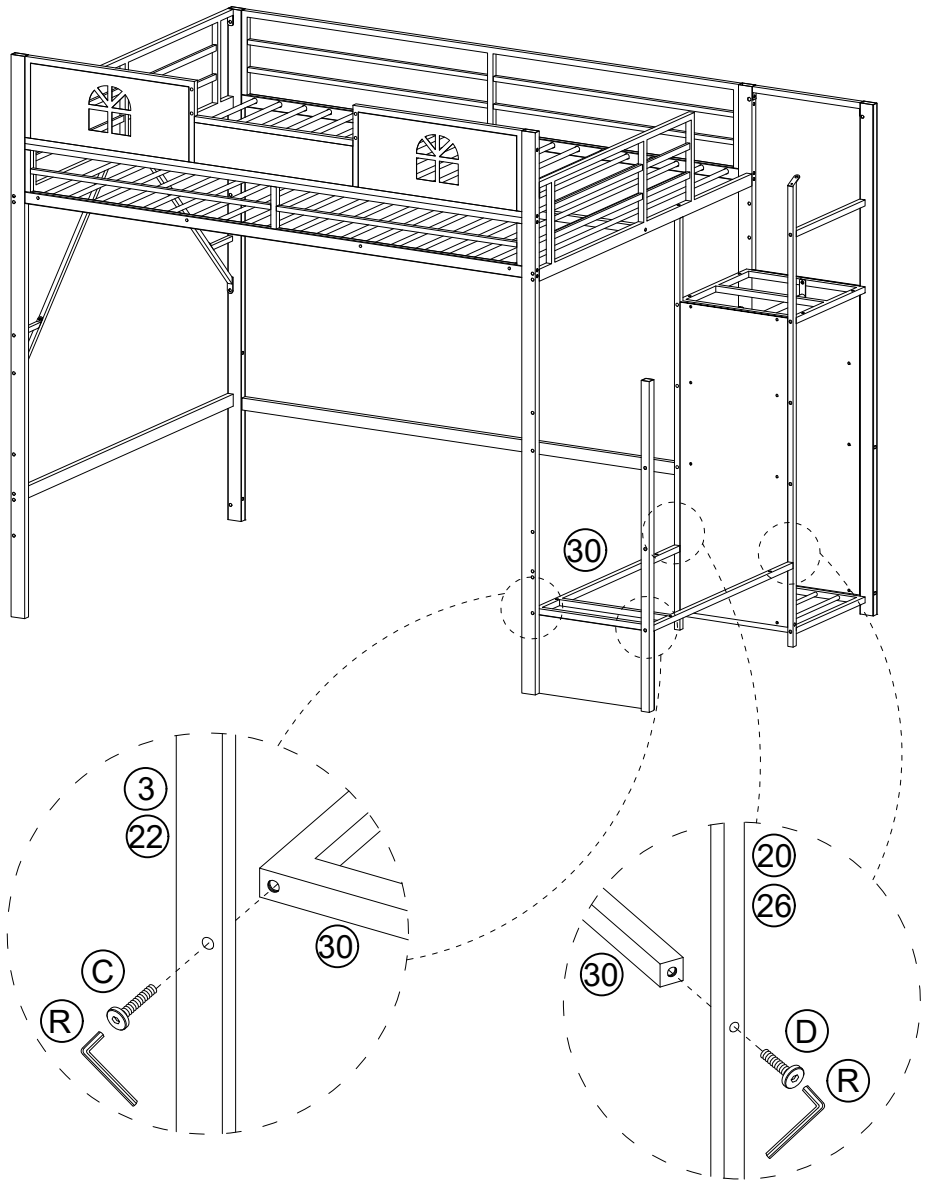

23

B

C		M8×45	2
D		M8×35	2
R		M5	1

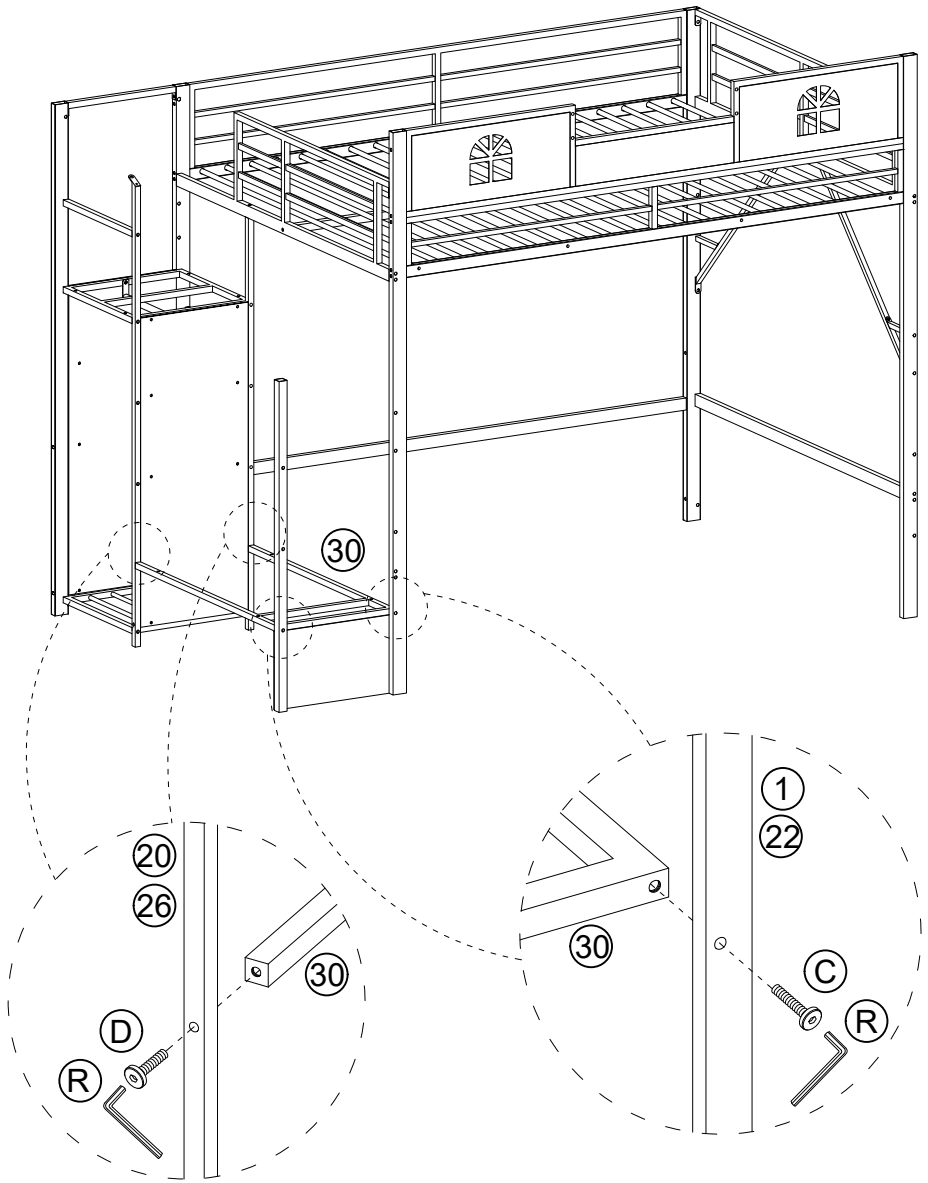

24

P	6*45	4
T		1

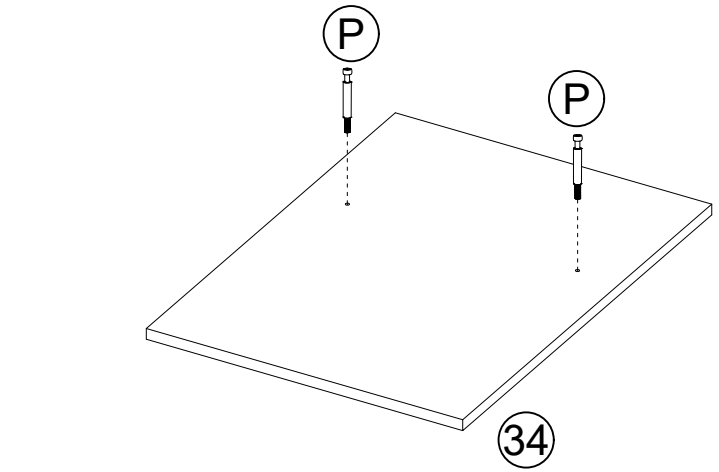

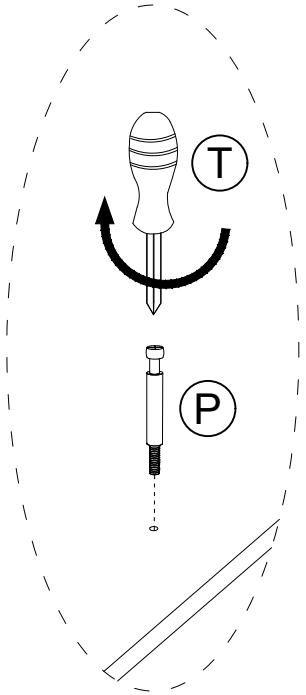

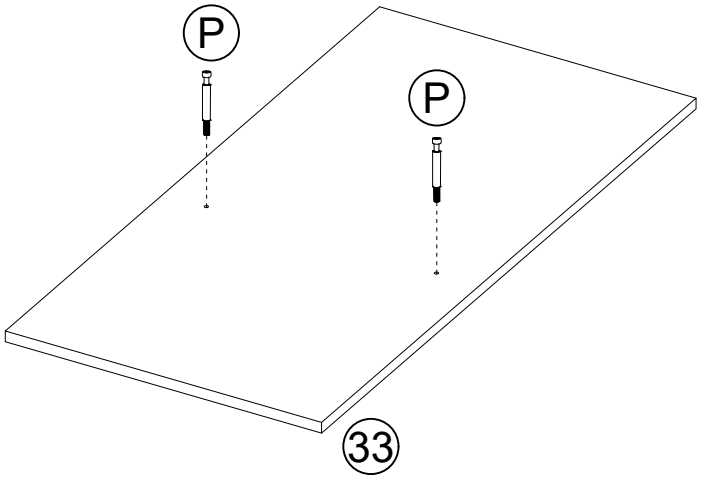

25

A

G		M6×30	4
S		M4	1

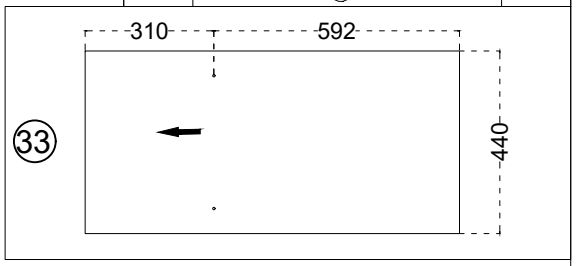

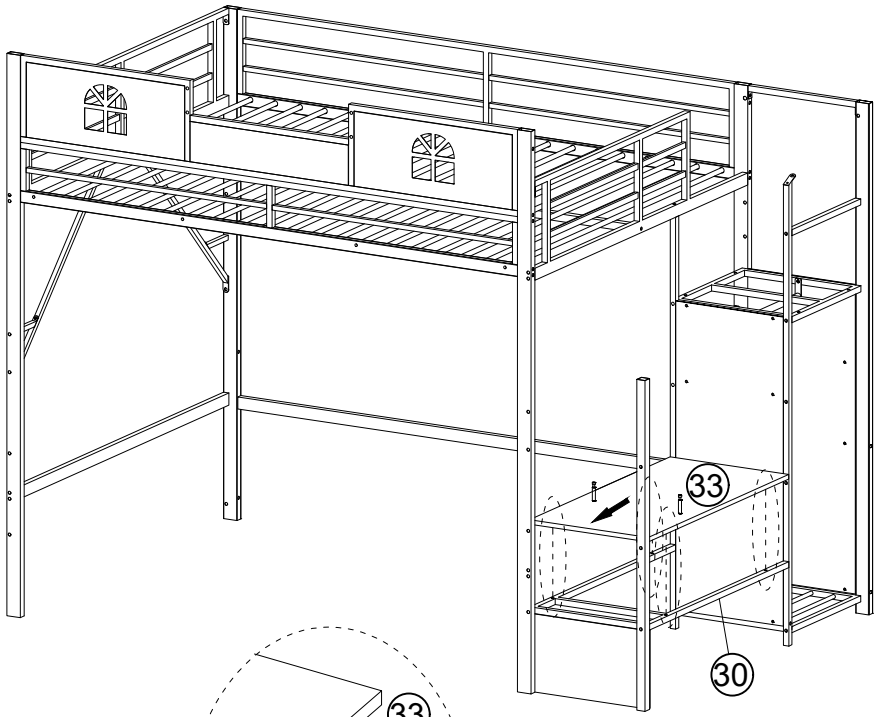

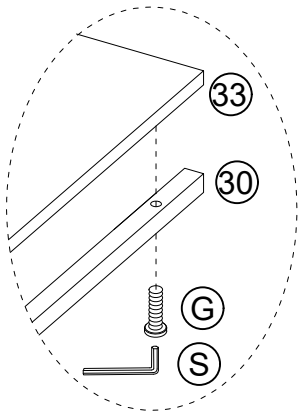

25

B

G		M6×30	4
S		M4	1

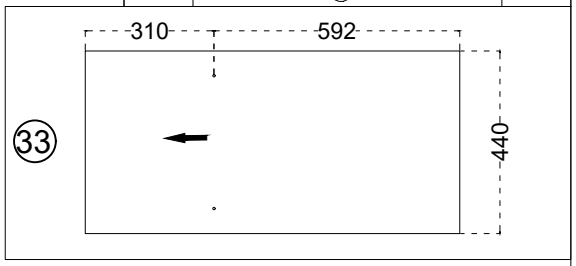

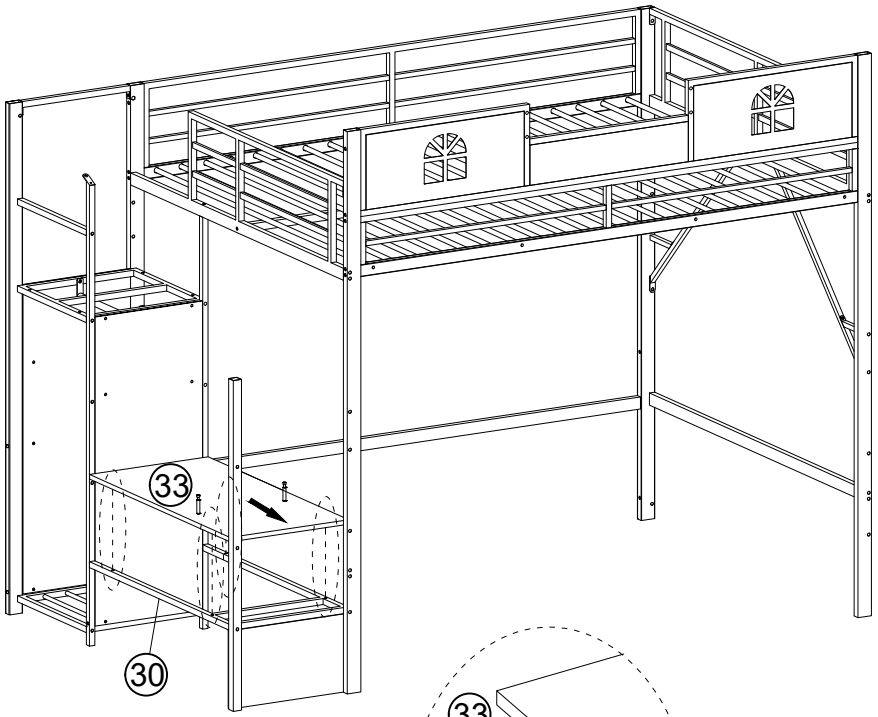

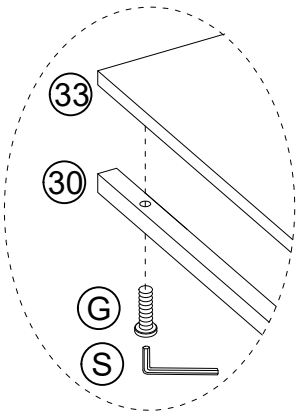

26

A

Q		15*12	2
T			1

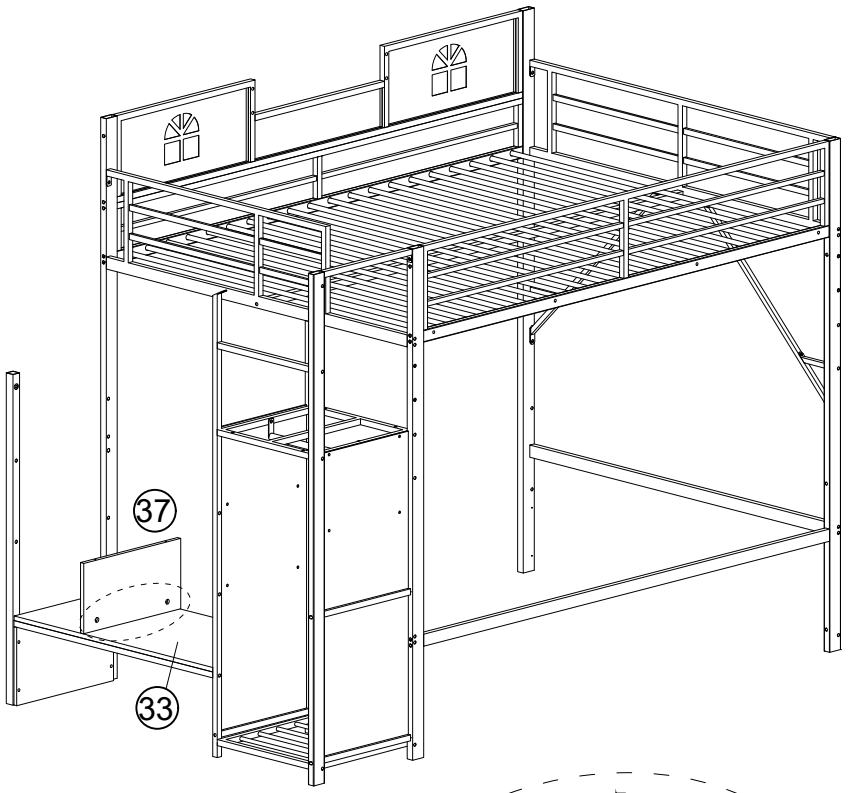

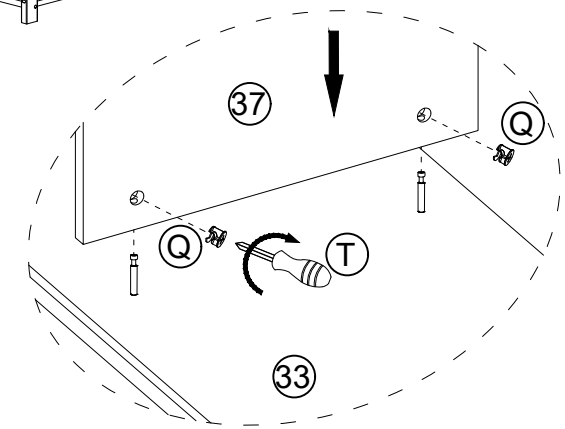

26

B

Q		15*12	2
T			1

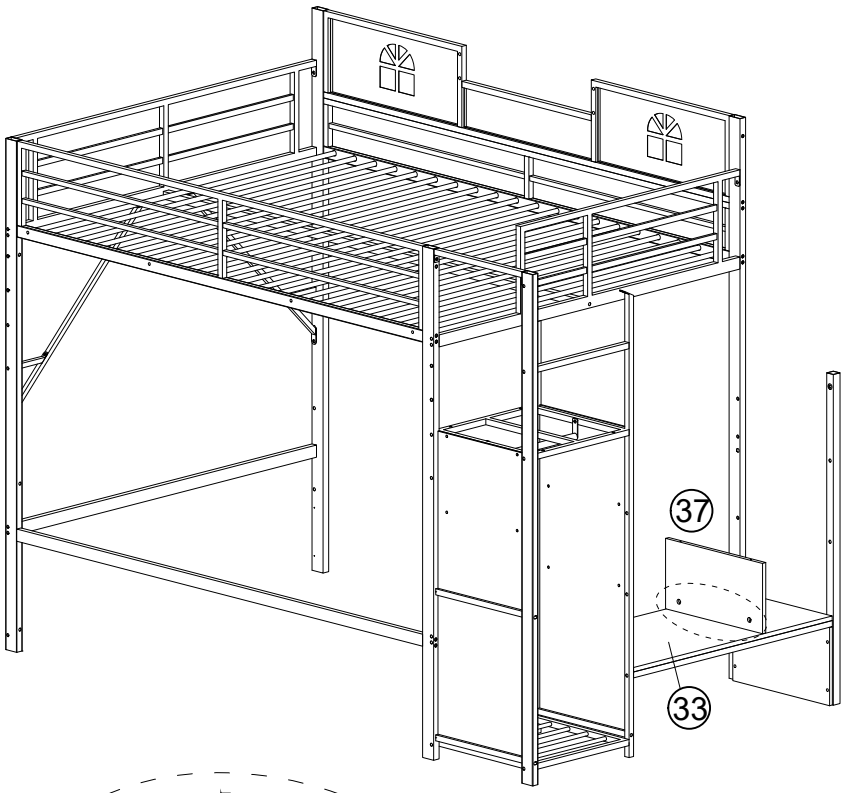

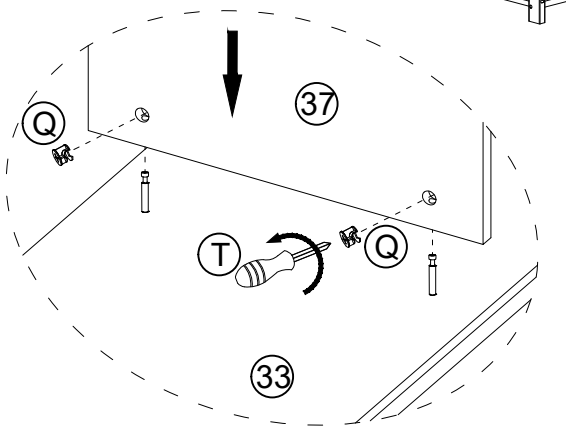

27

A

C		M8×45	2
D		M8×35	2
R		M5	1

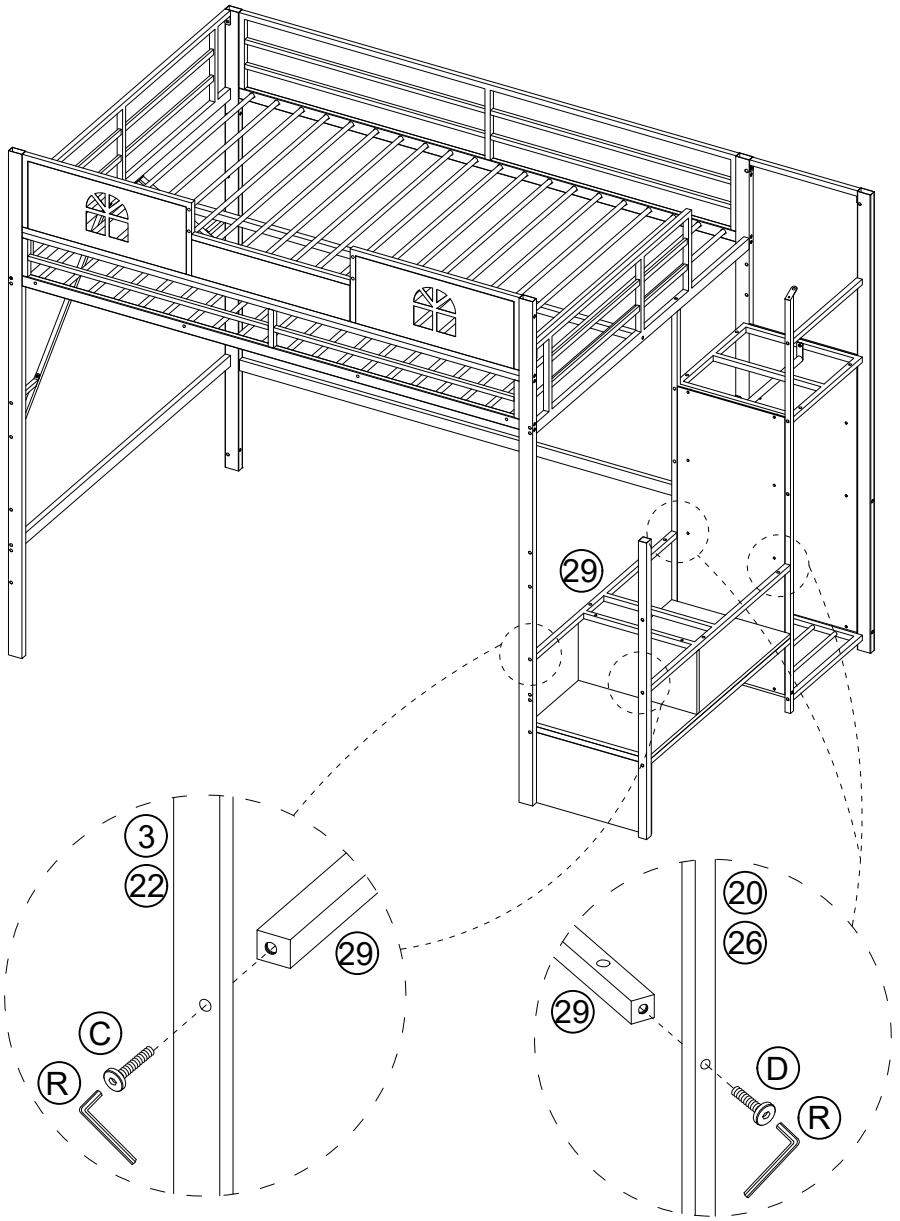

27

B

C		M8×45	2
D		M8×35	2
R		M5	1

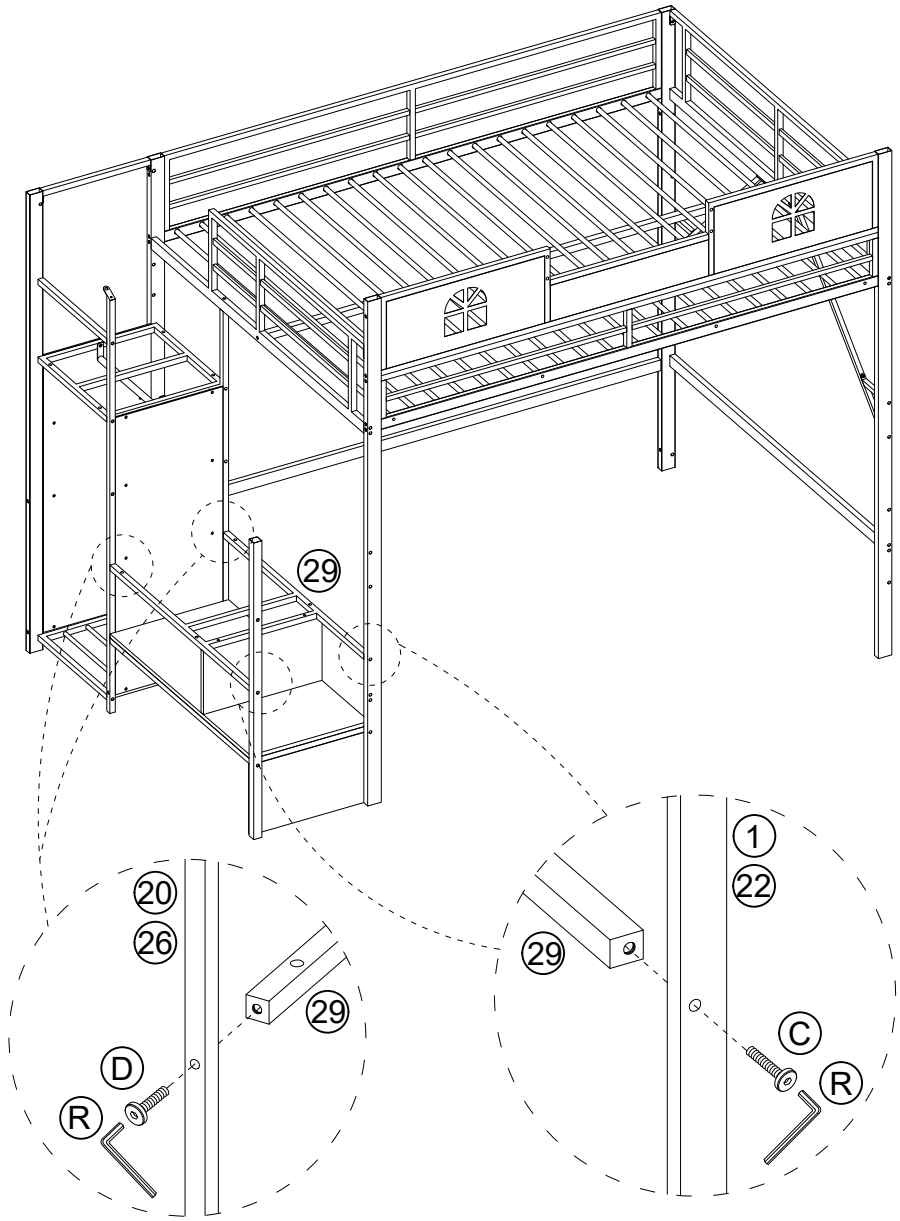

28

A

O	M5×40	2
T		1

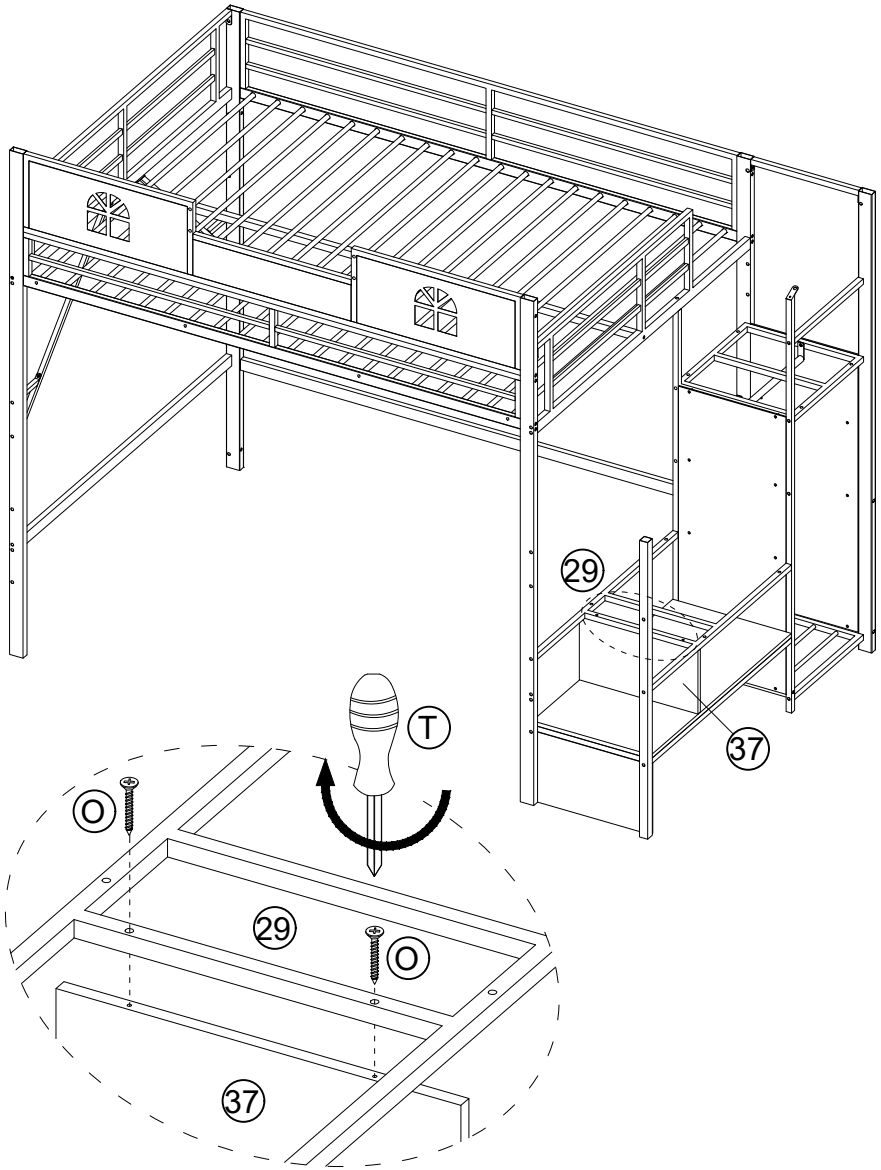

28

B

O	M5×40	2
T		1

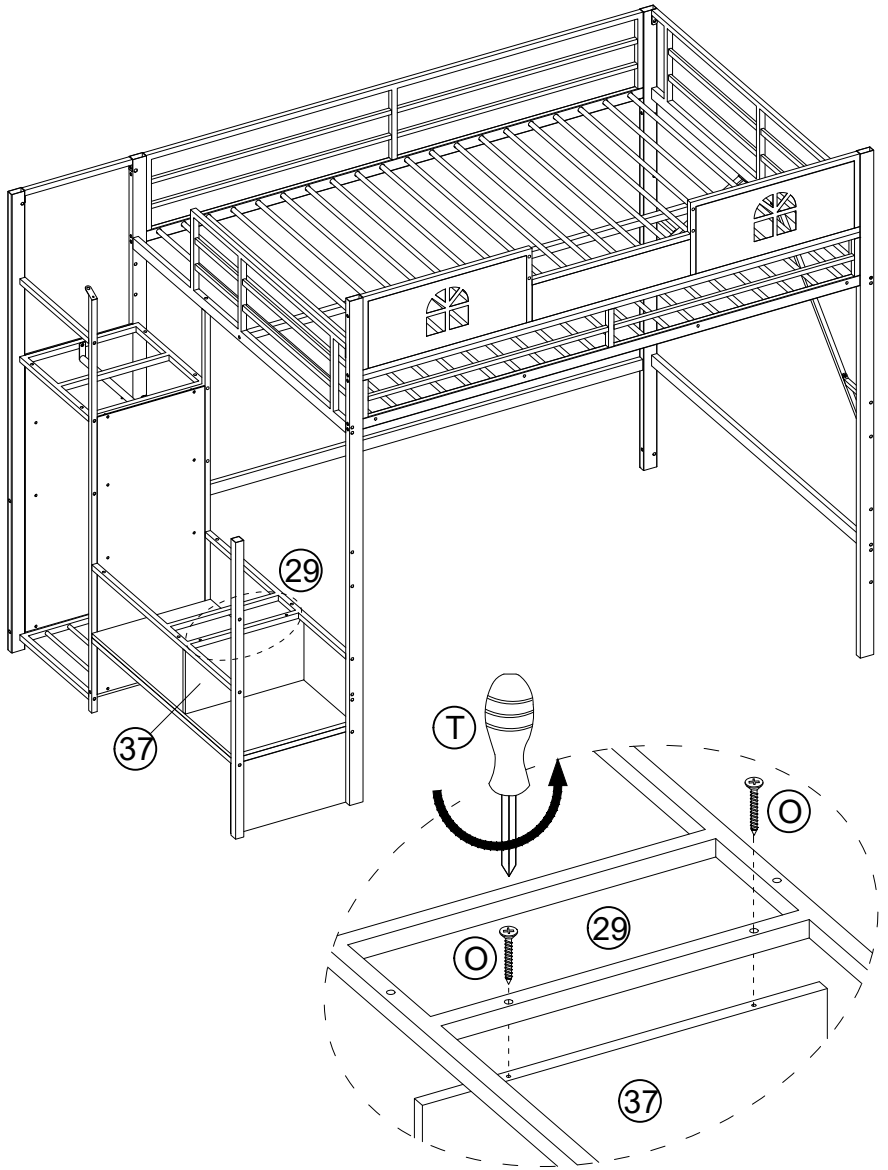

29

A

G		M6×30	4
S		M4	1

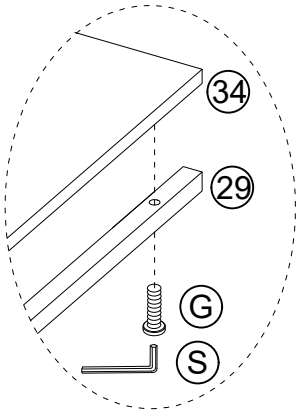

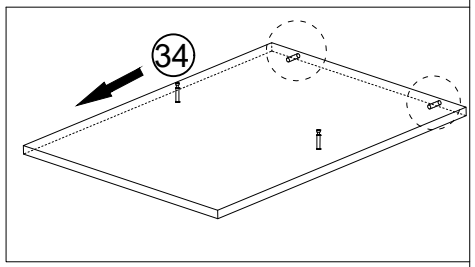

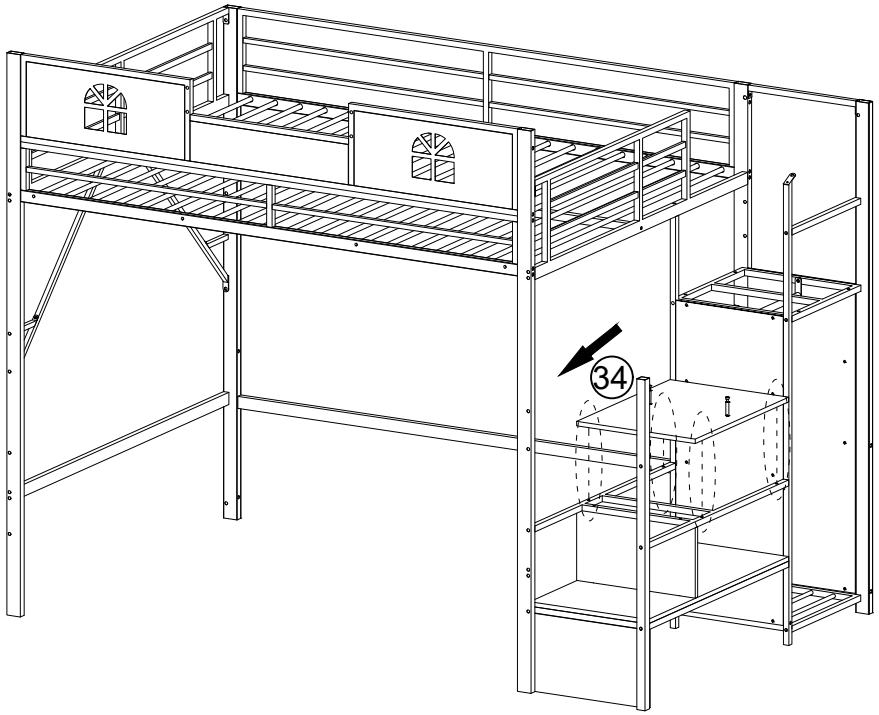

29

B

G		M6×30	4
S		M4	1

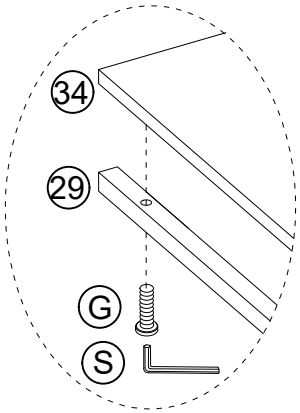

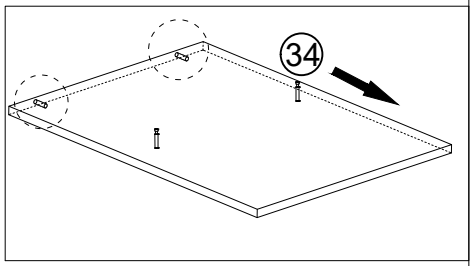

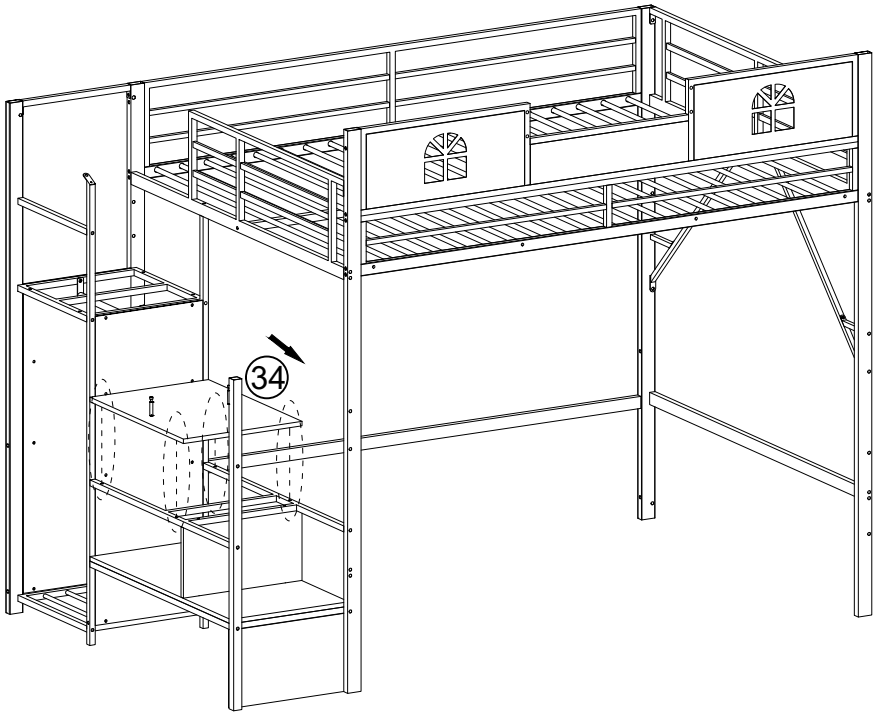

30

A

Q		15*12	2
T			1

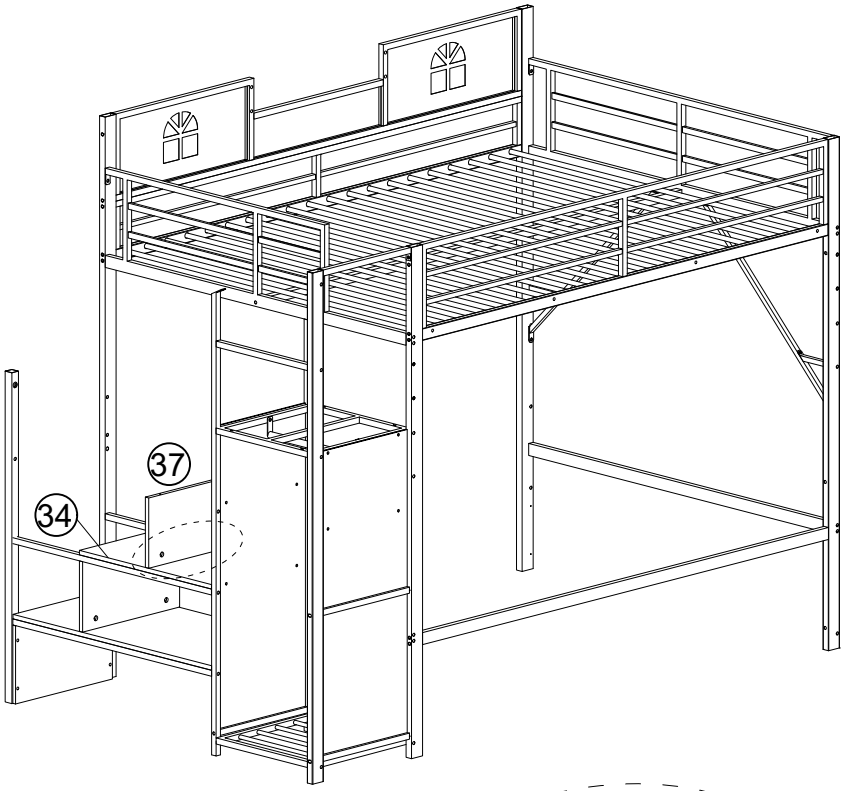

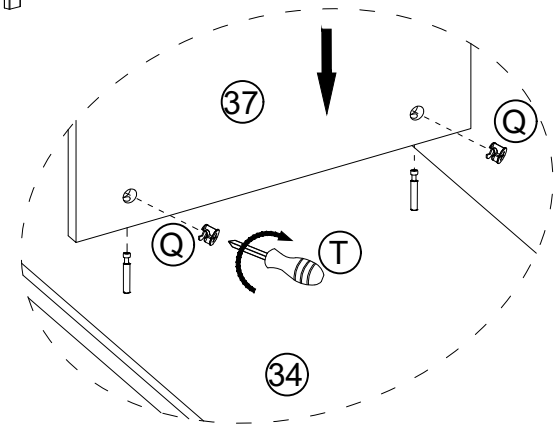

30

B

Q		15*12	2
T			1

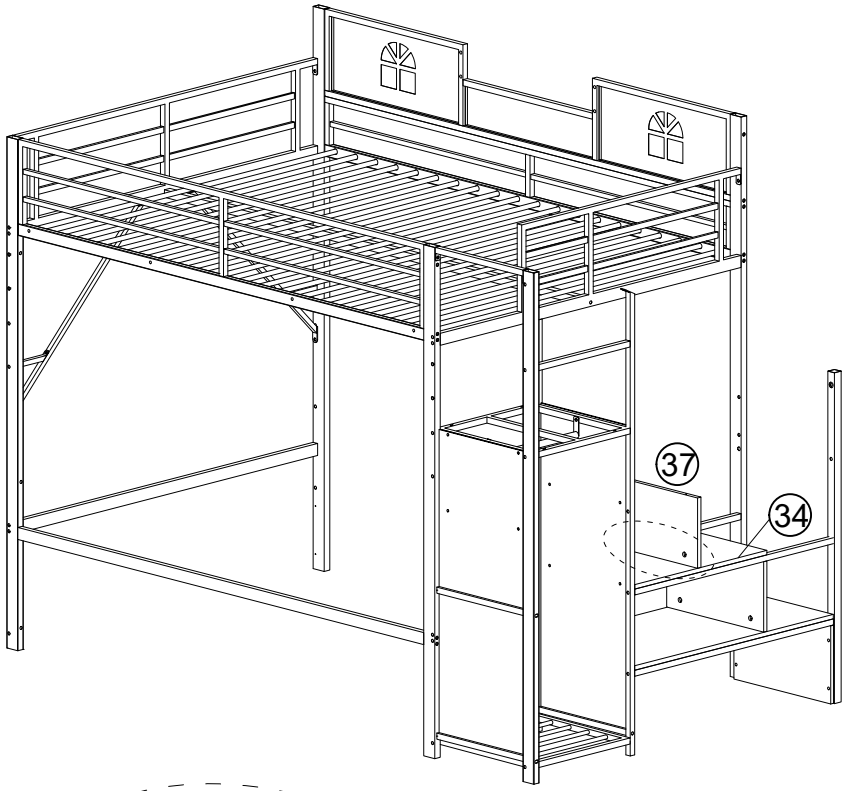

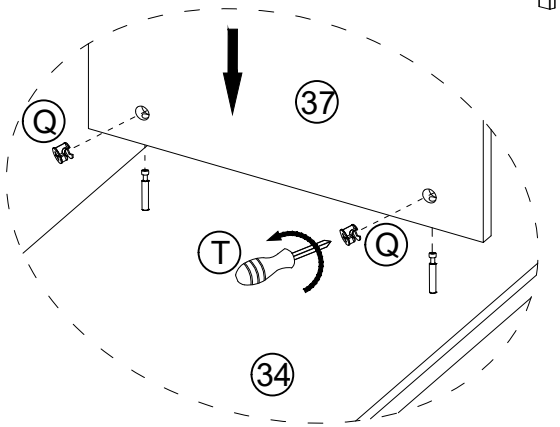

31

A

C		M8×45	2
D		M8×35	2
R		M5	1

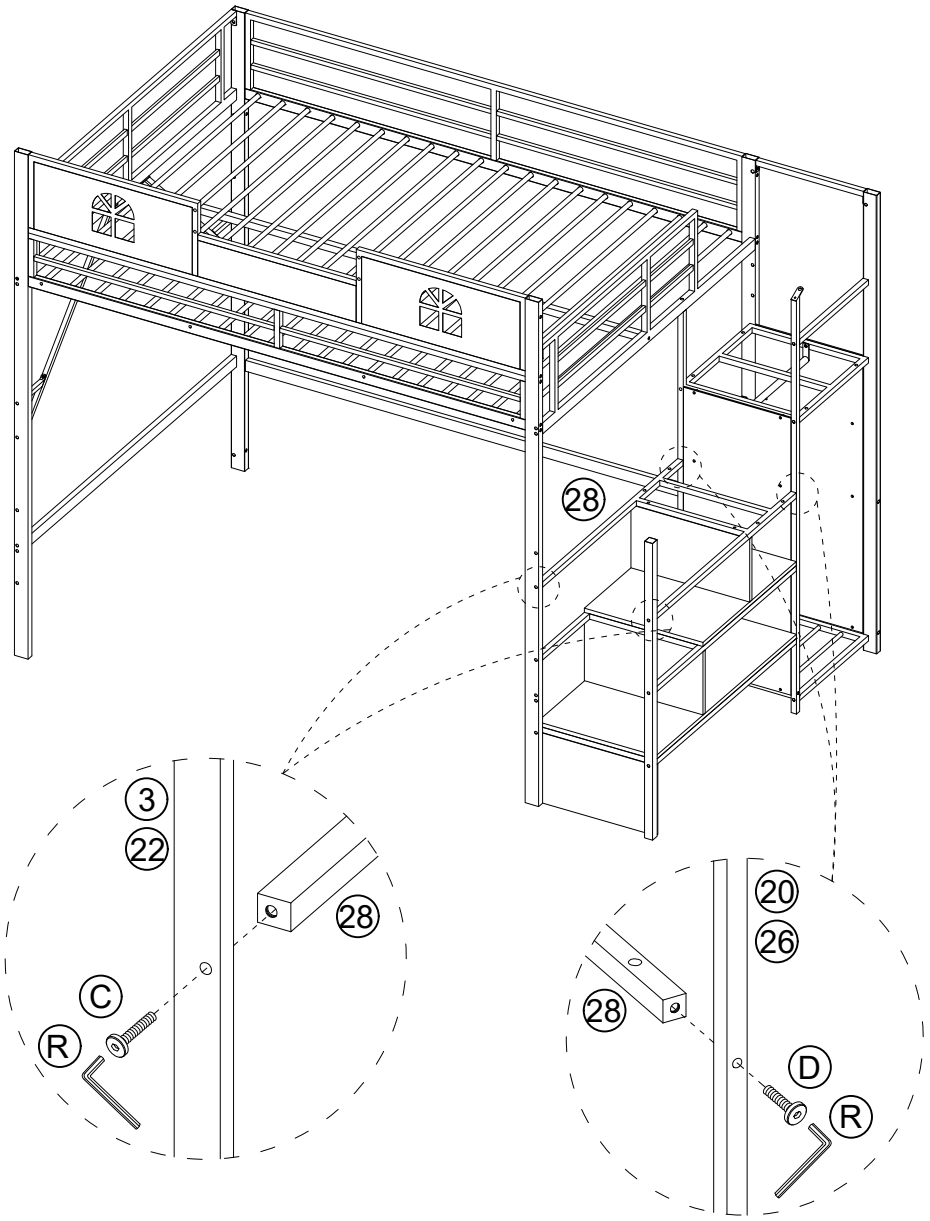

31

B

C		M8×45	2
D		M8×35	2
R		M5	1

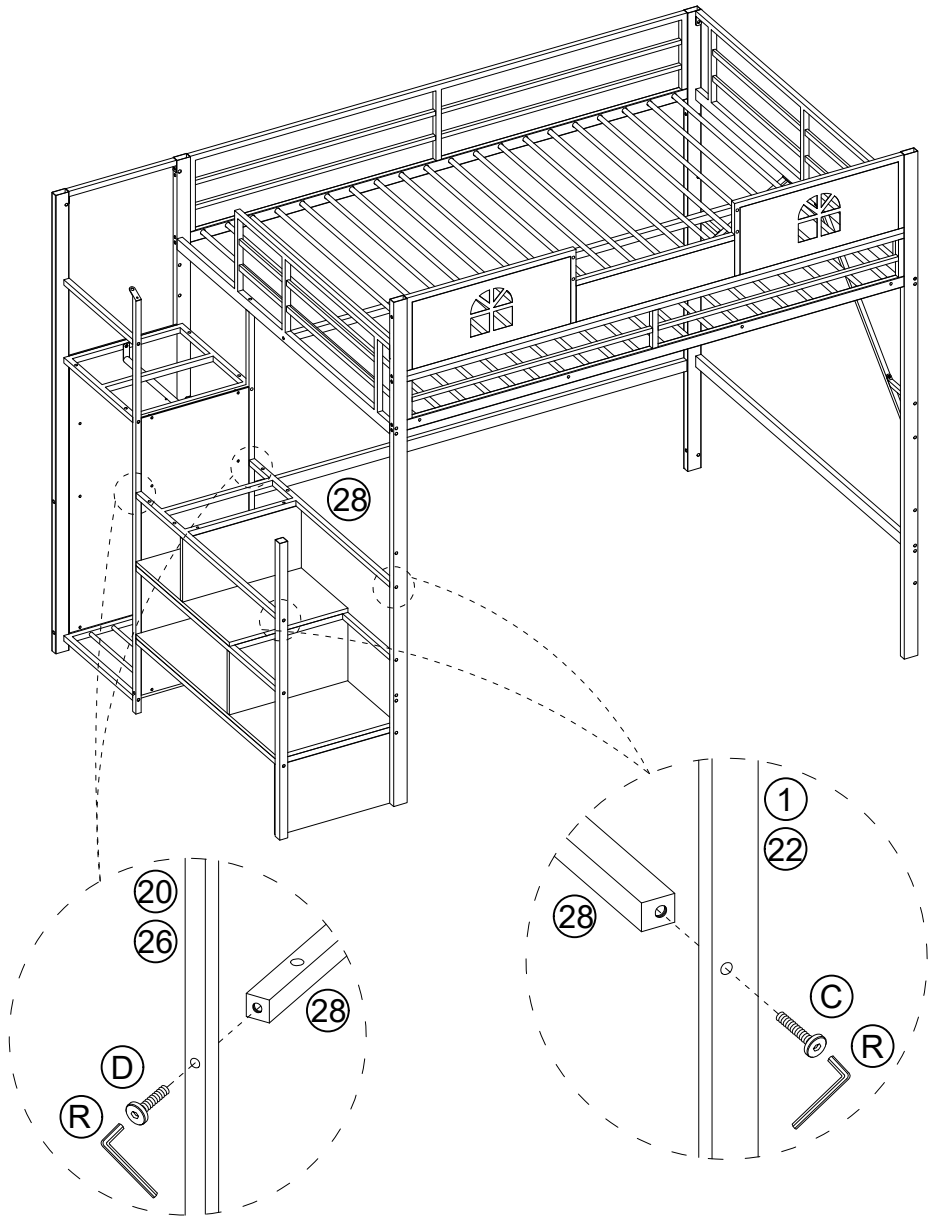

32

A

O		M5×40	2
T	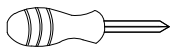		1

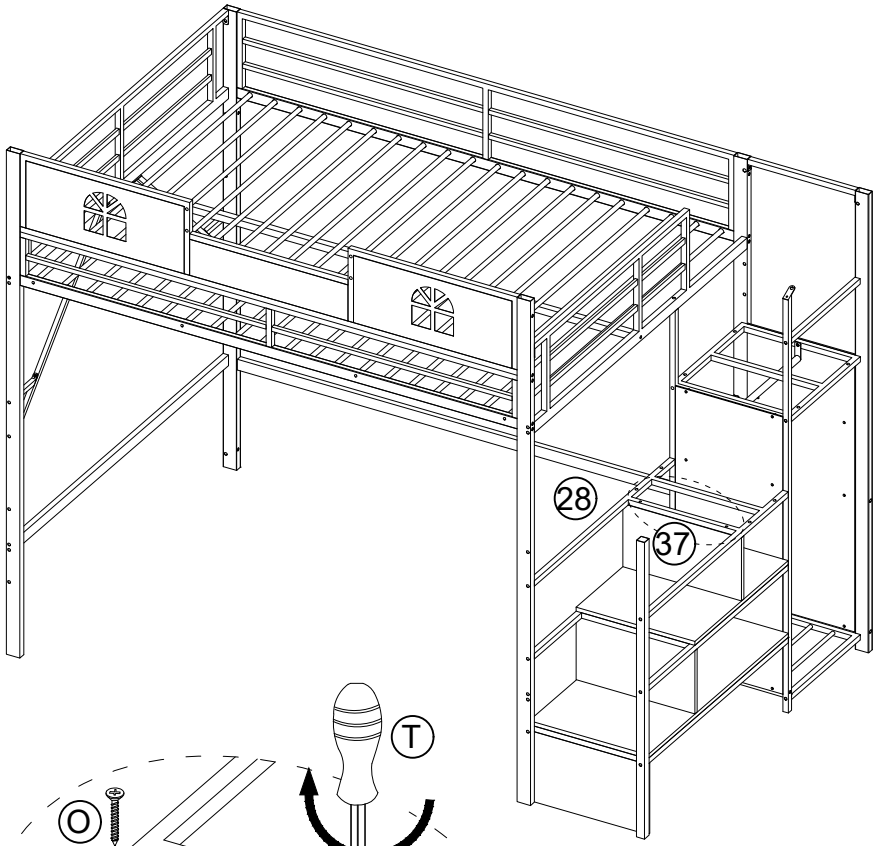

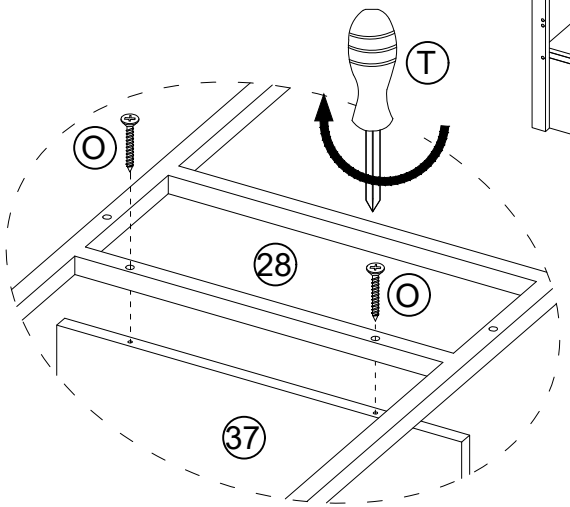

32

B

O		M5×40	2
T	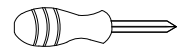		1

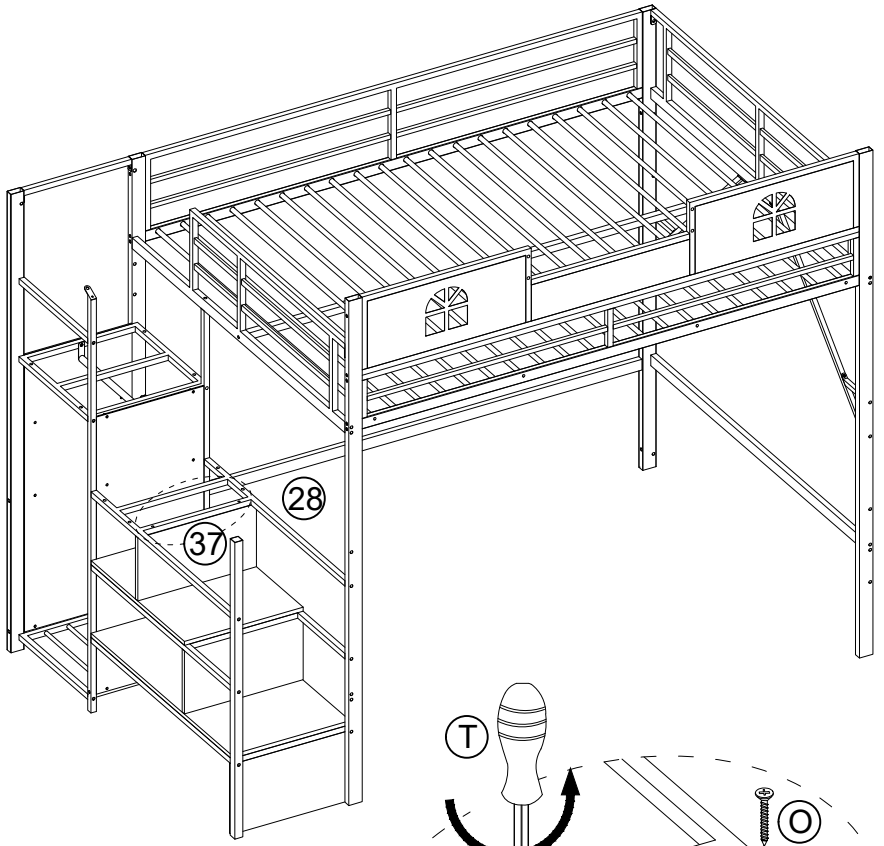

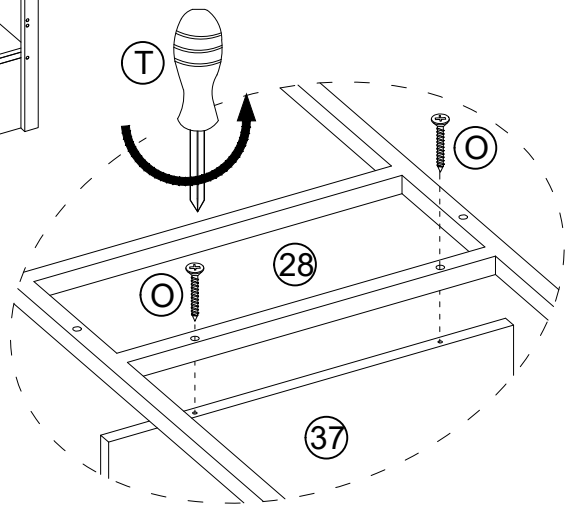

33

A

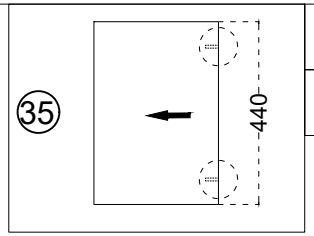

G		M6×30	4
S		M4	1

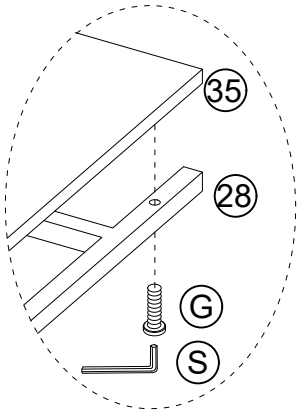

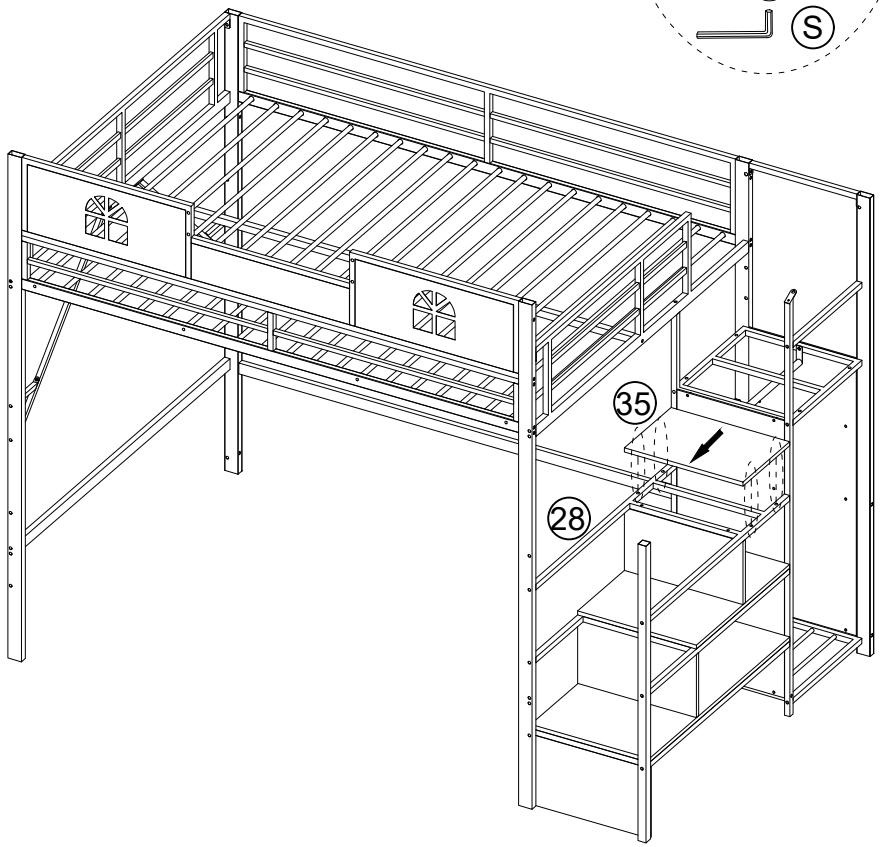

33

B

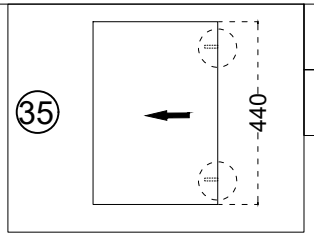

G		M6×30	4
S		M4	1

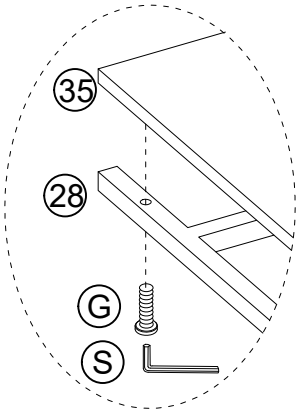

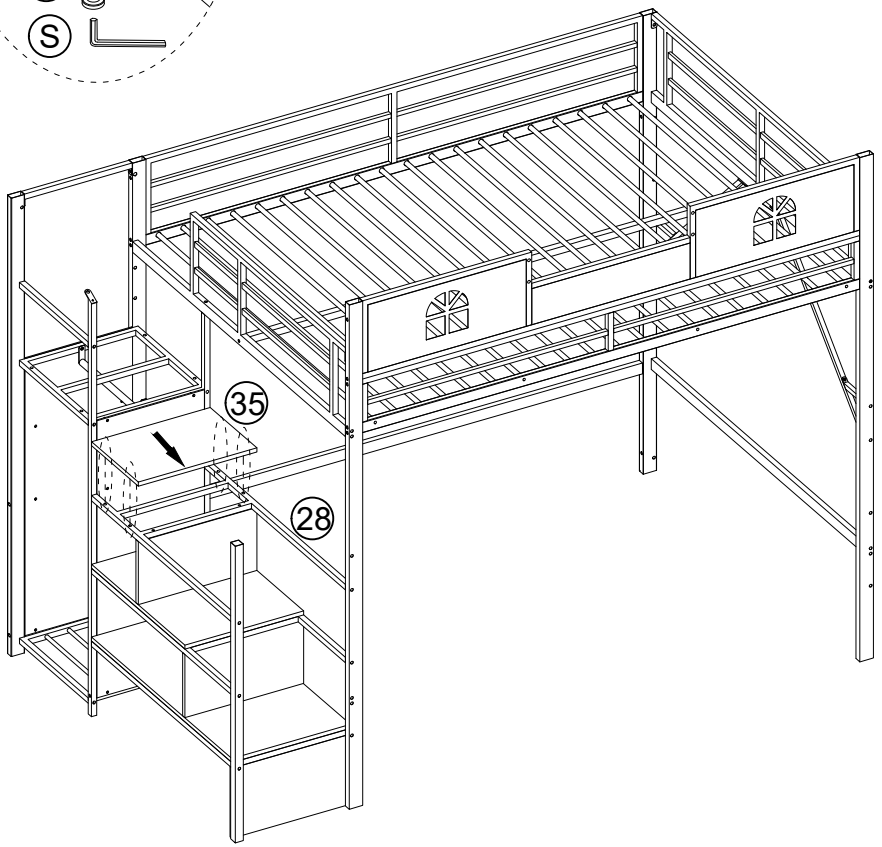

34

A

G		M6×30	4
S		M4	1

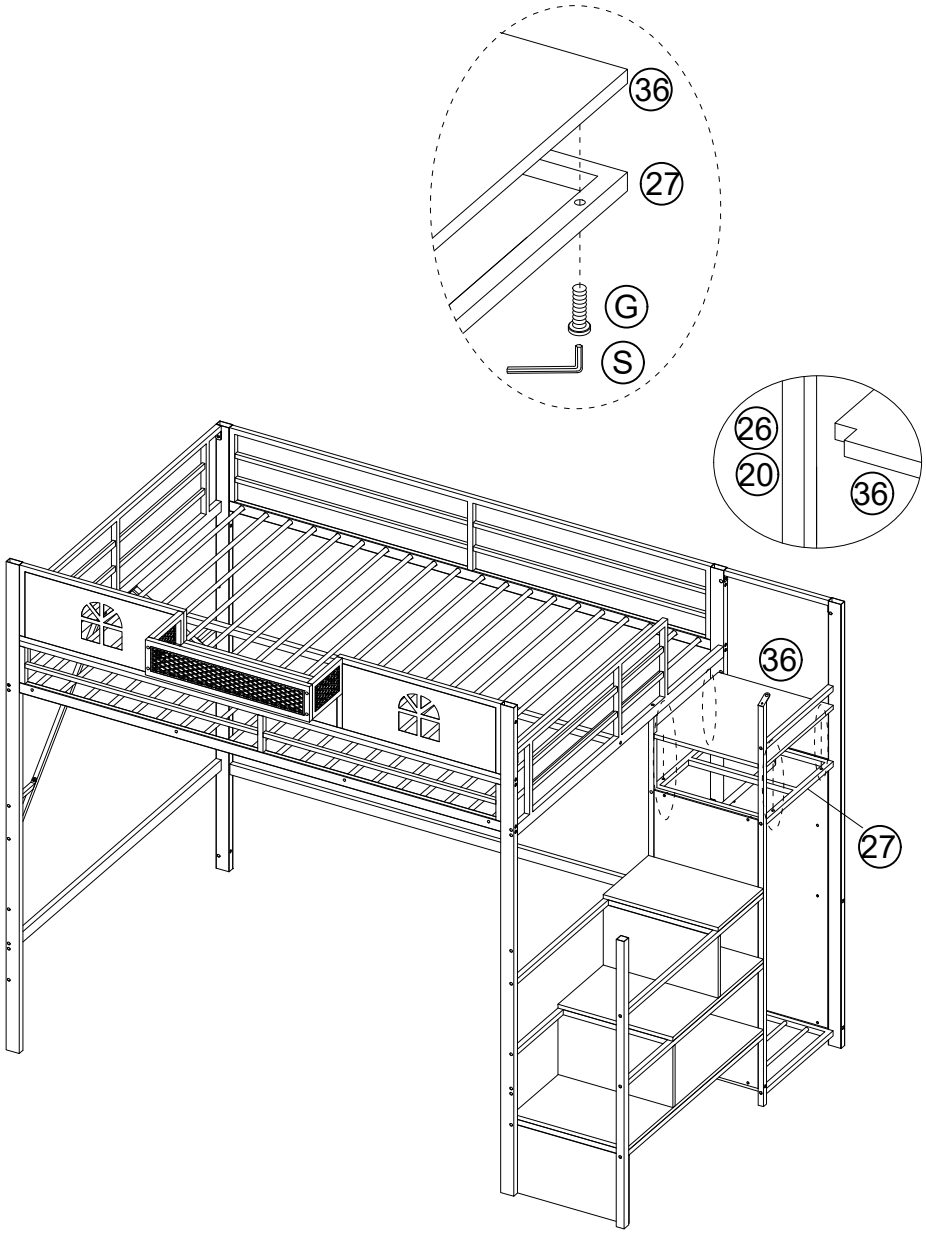

34

B

G		M6×30	4
S		M4	1

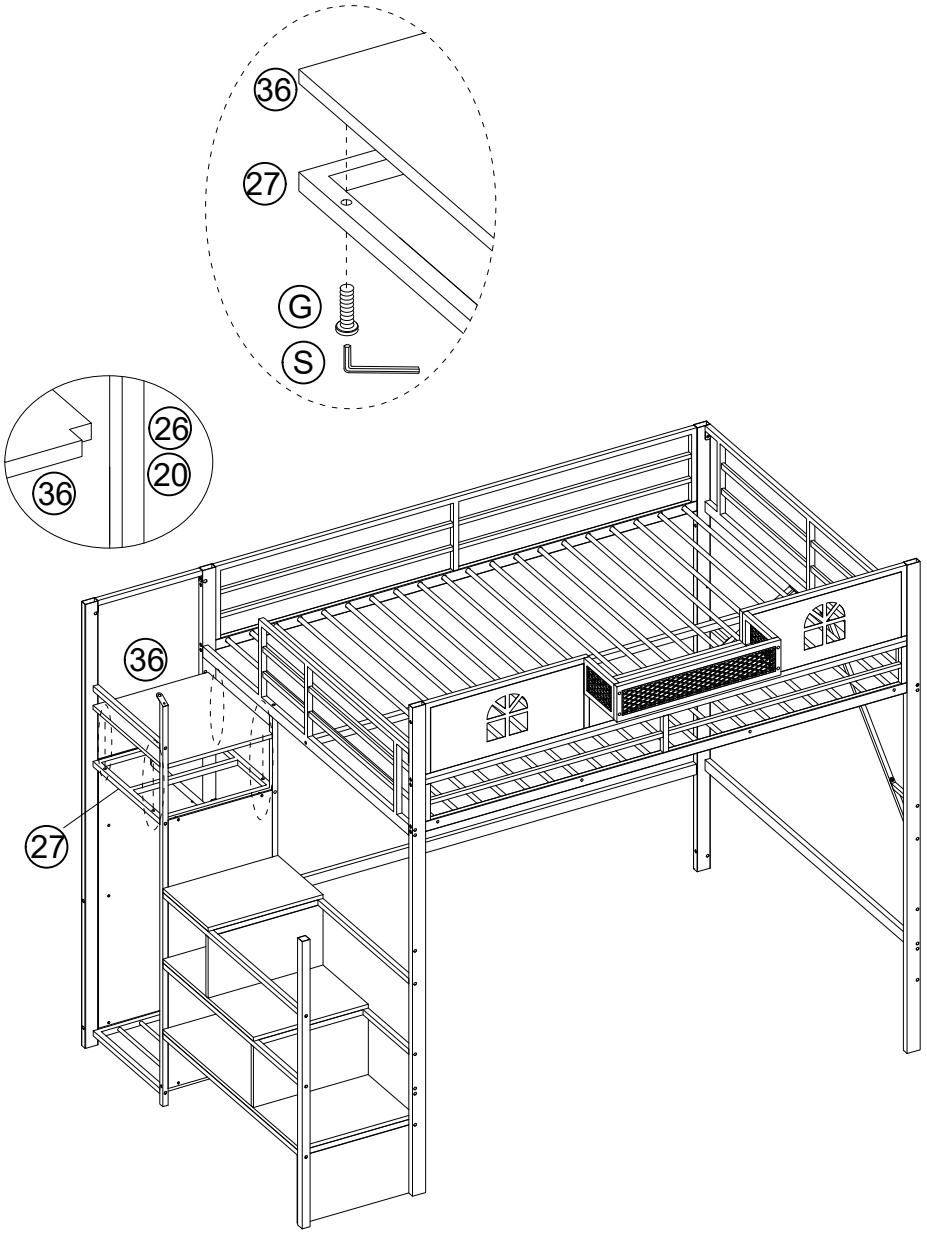

35

N		M5×25	4
S		M4	1

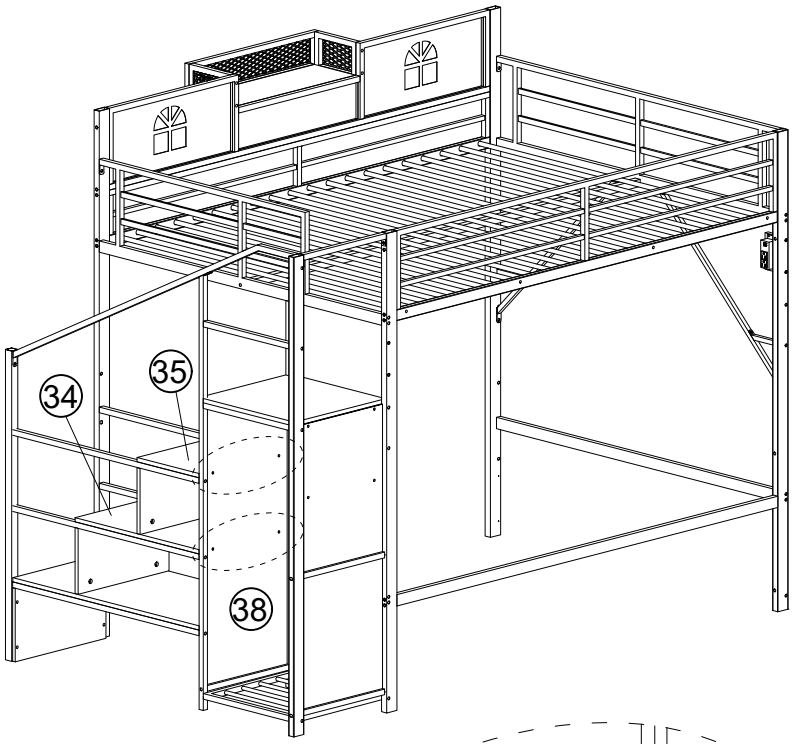

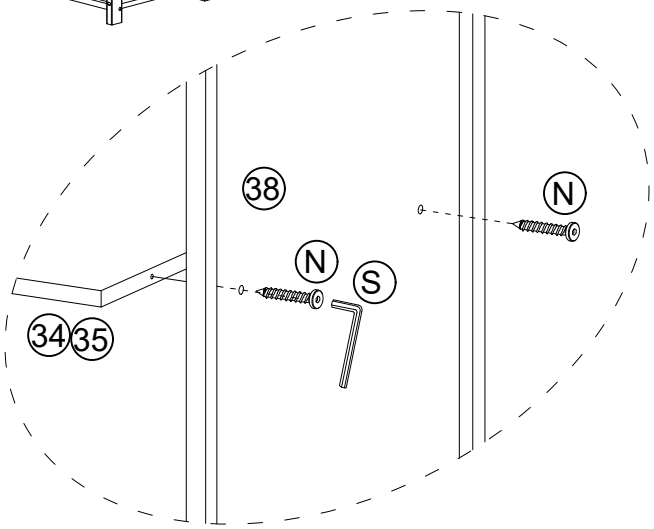

35

N		M5×25	4
S		M4	1

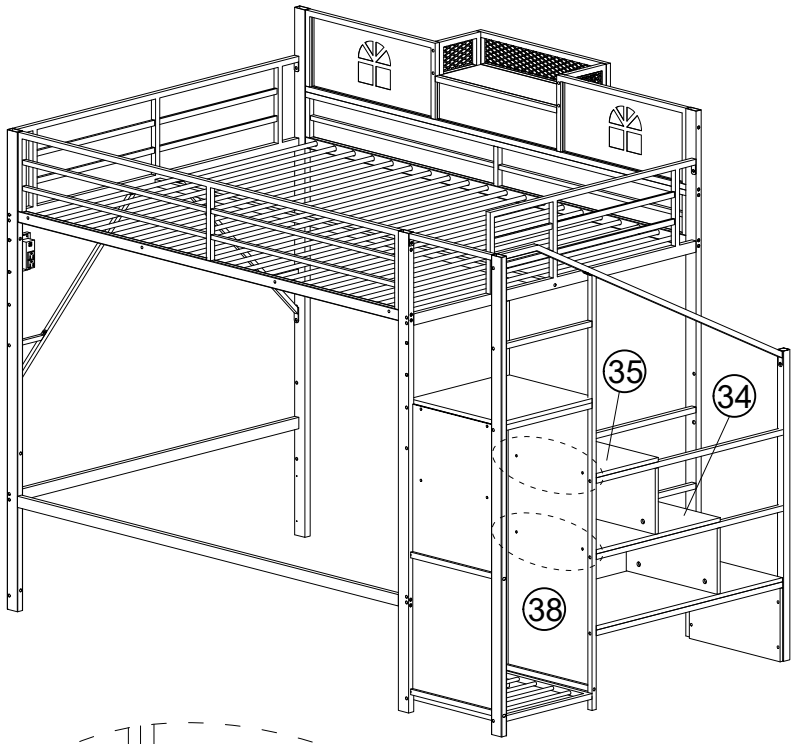

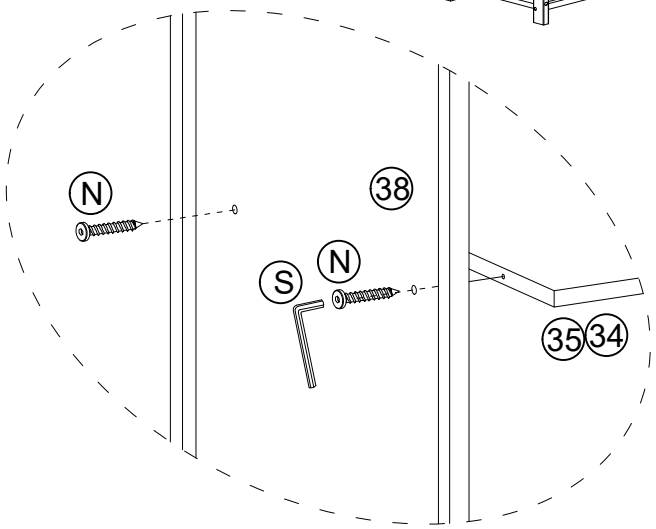

36

A

E		M8×20	2
R		M5	1
L		M6×15	1
S		M4	1

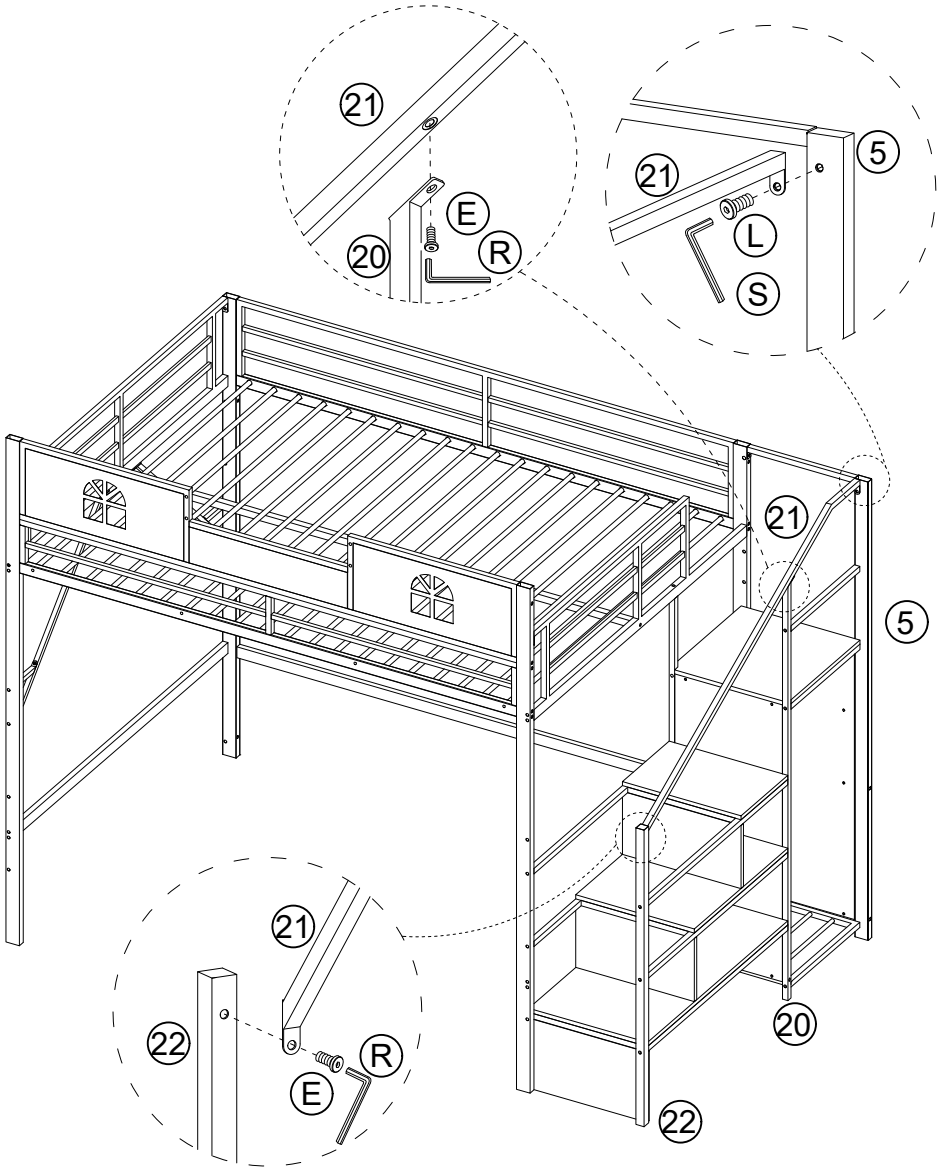

36

B

E		M8×20	2
R		M5	1
L		M6×15	1
S		M4	1

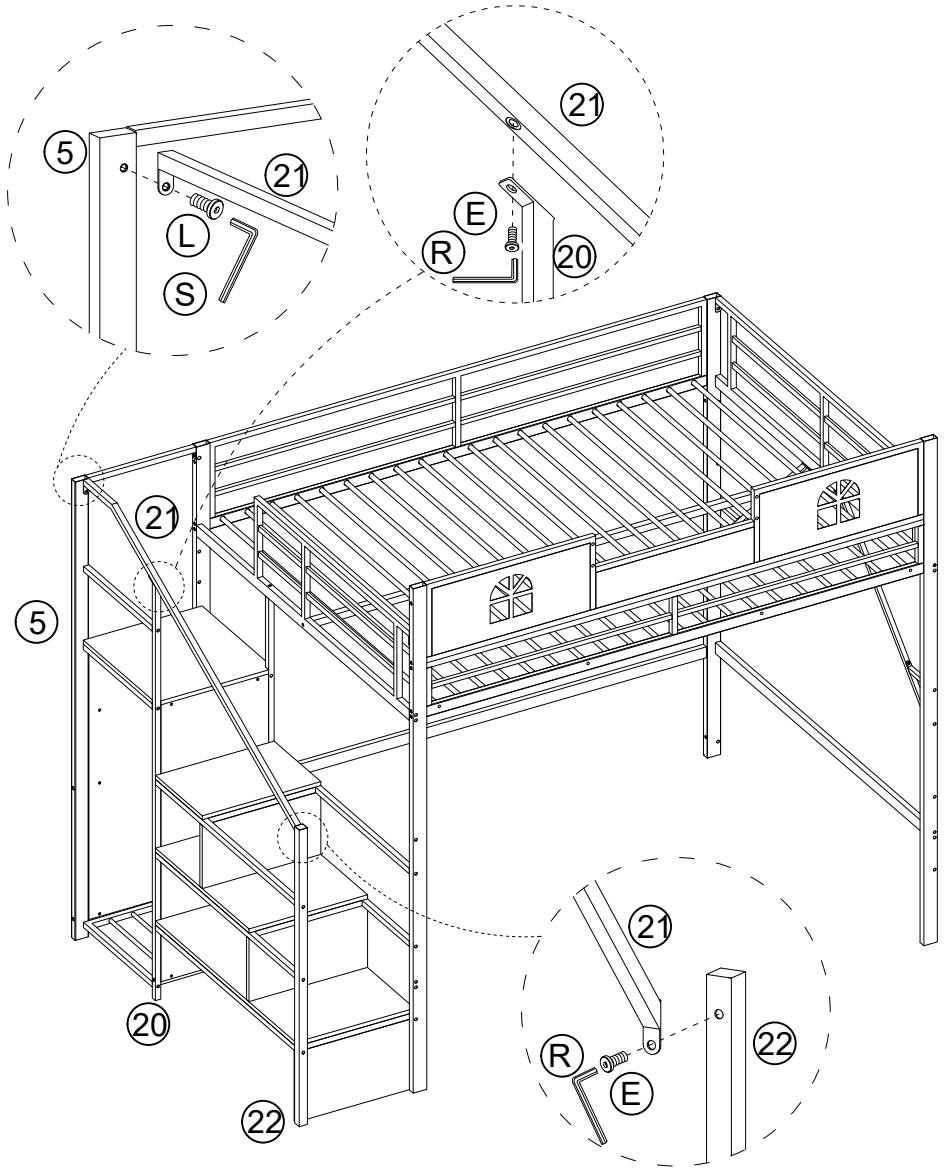

37

D	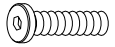	M8×35	4
R		M5	1

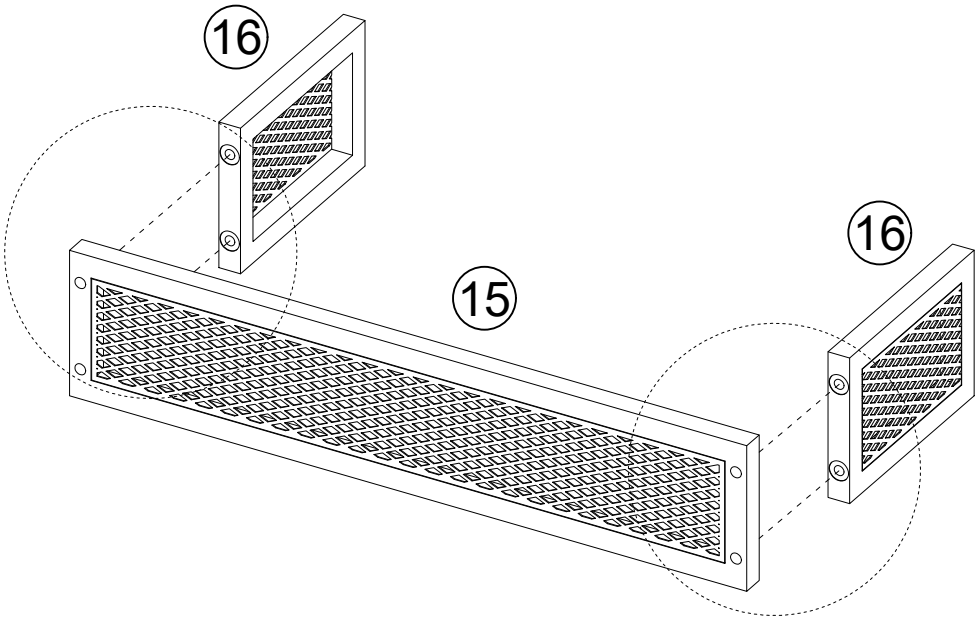

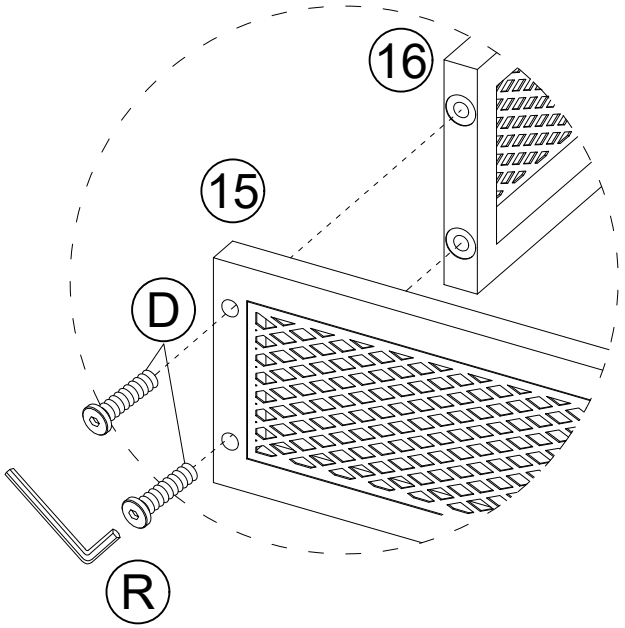

38

M		M6×12	4
S		M4	1
41	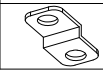		4

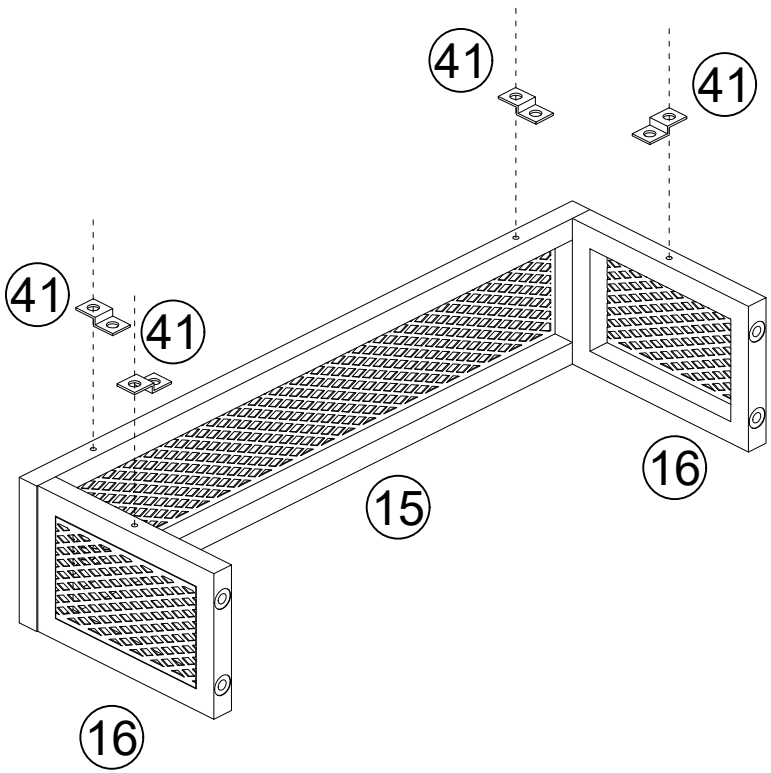

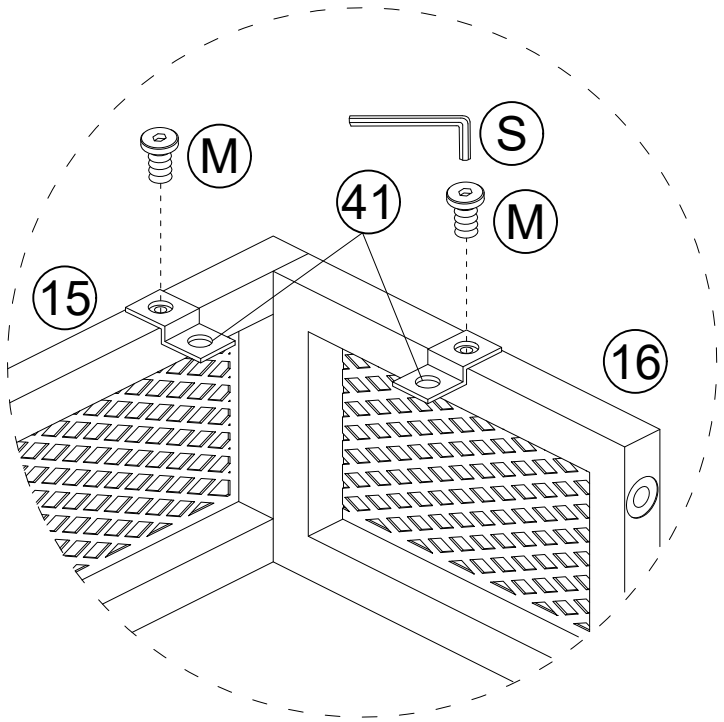

39

M		M6×12	4
S		M4	1

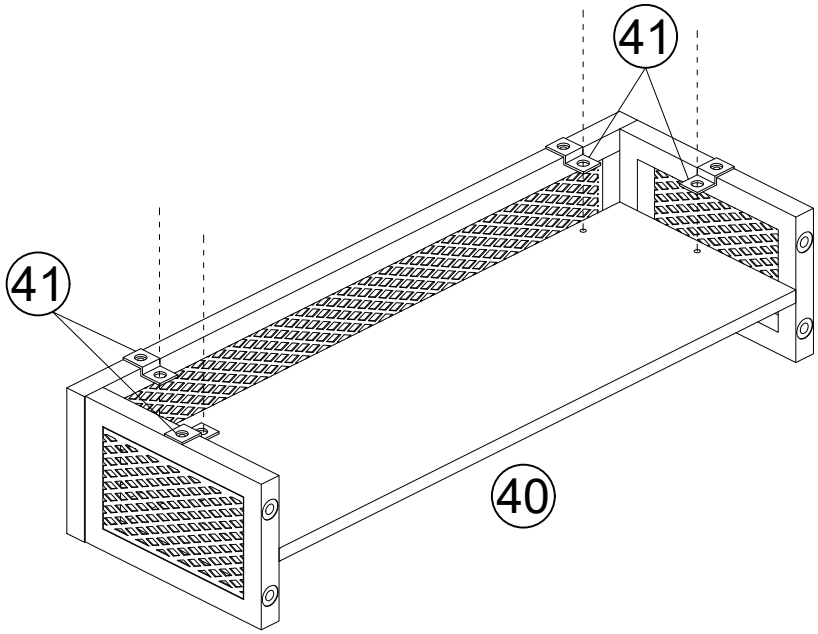

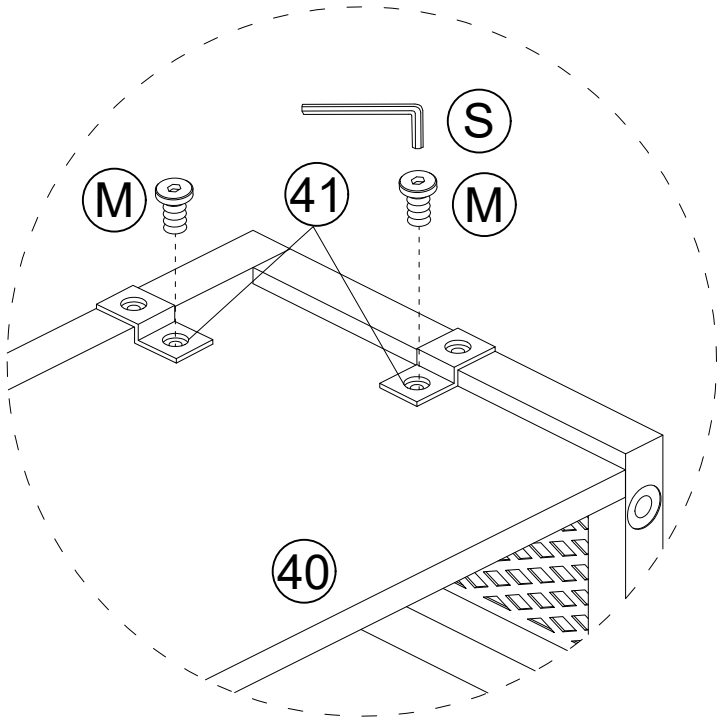

40

A

D		M8×35	4
R		M5	1

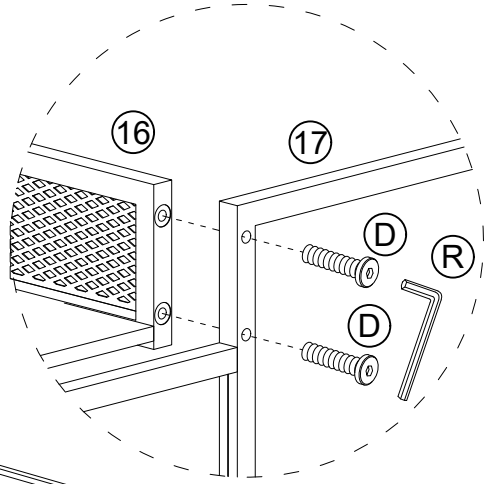

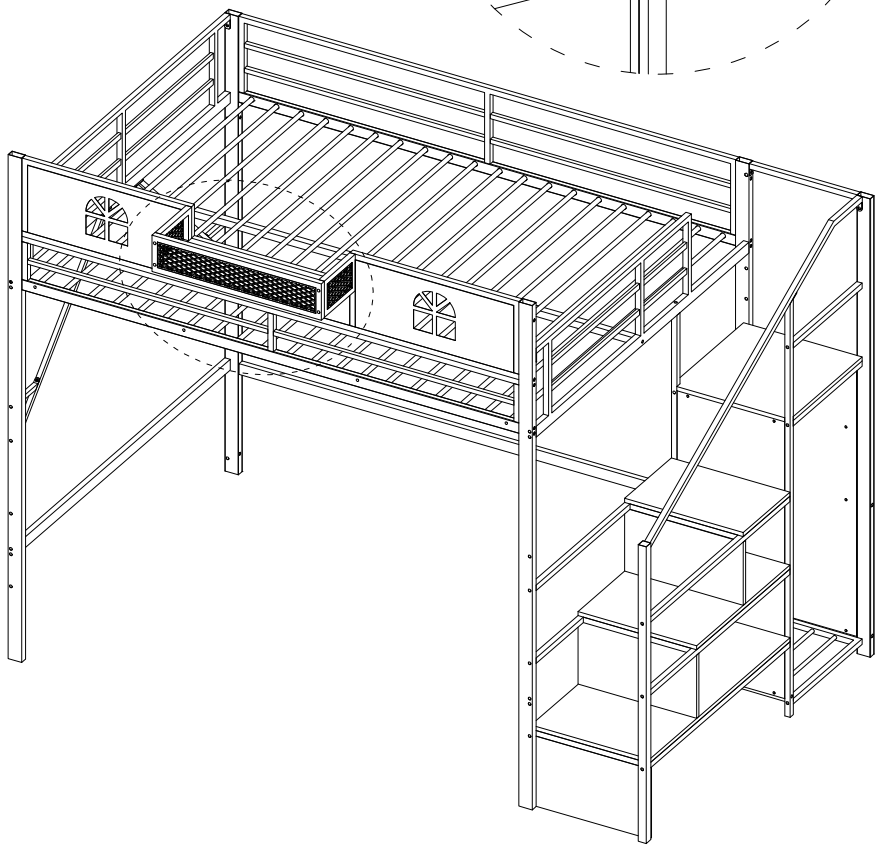

40

B

D		M8×35	4
R		M5	1

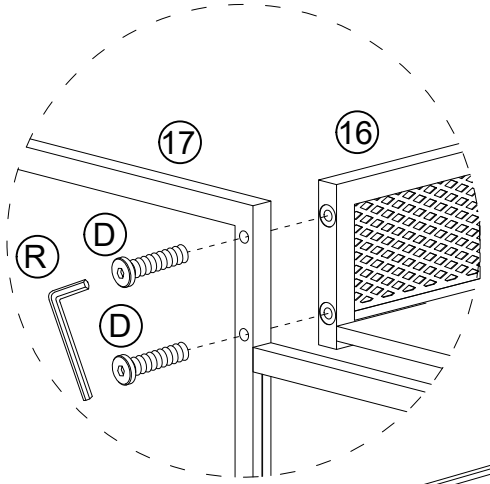

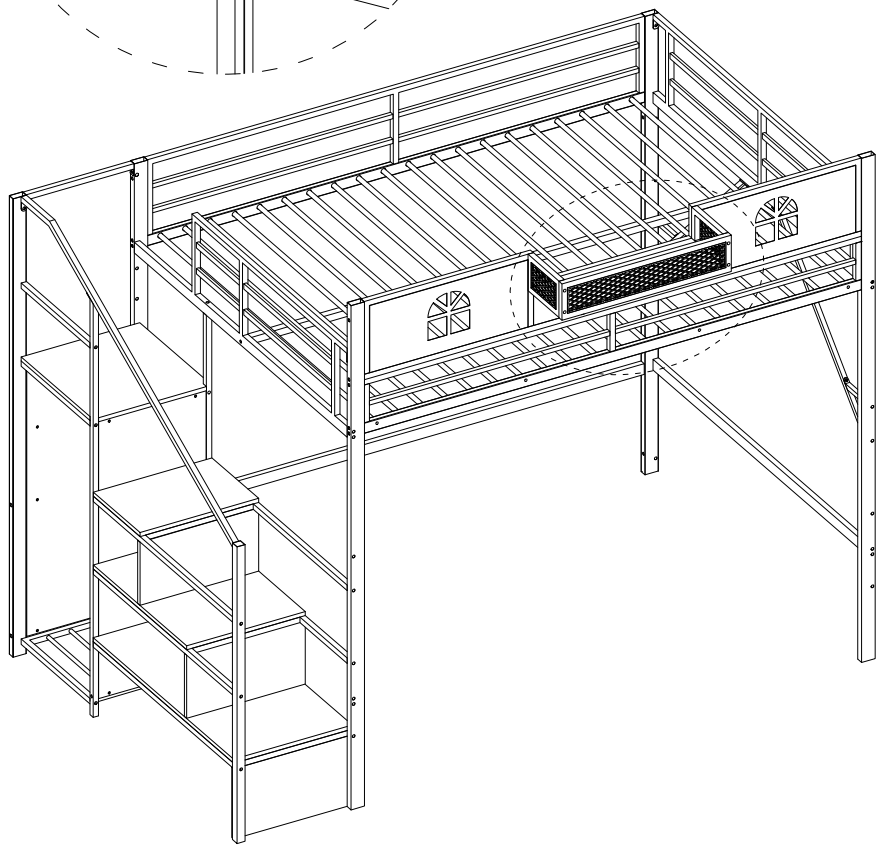

41

W	M3×12	4
T		1

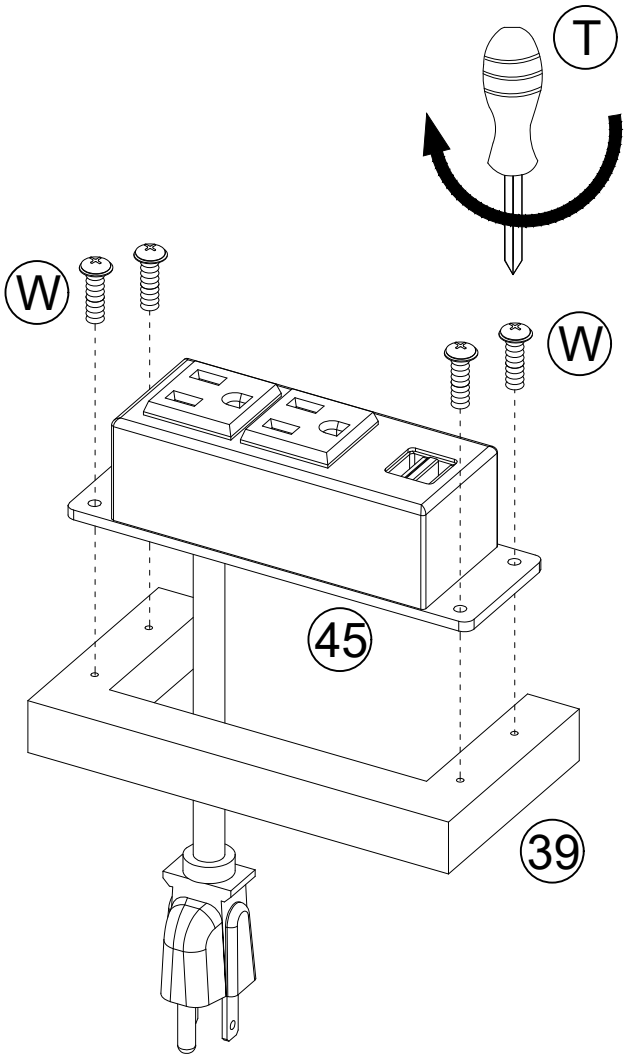

42

A

F	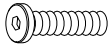	M6×40	2
S	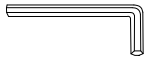	M4	1

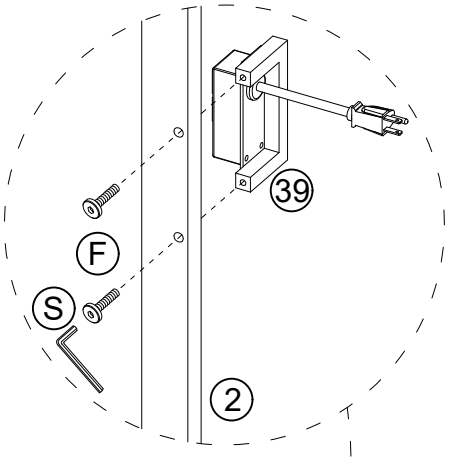

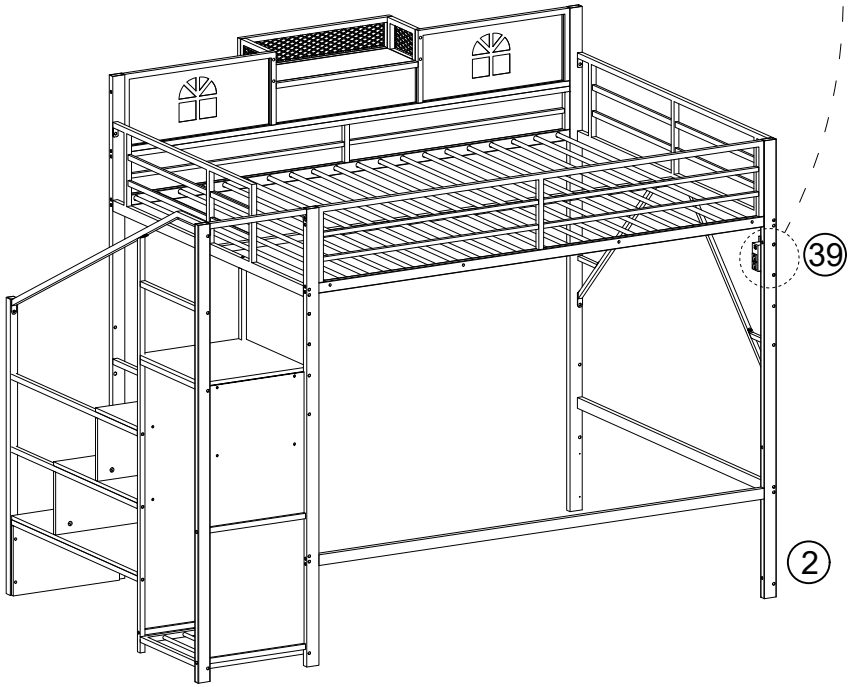

42

B

F	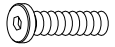	M6×40	2
S	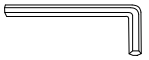	M4	1

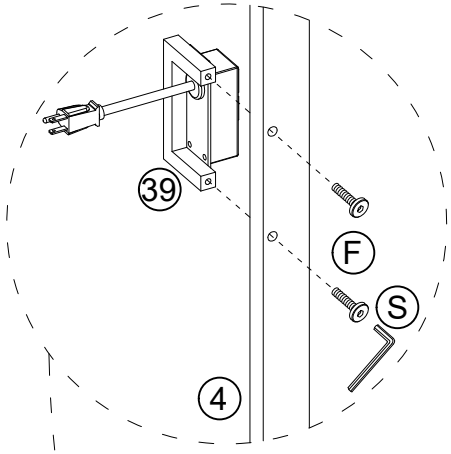

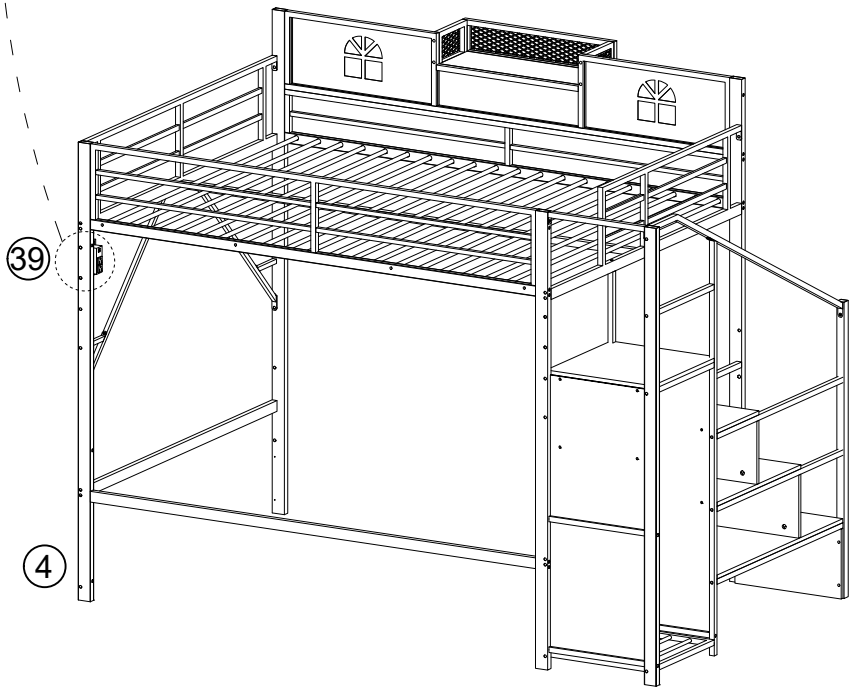

43

A

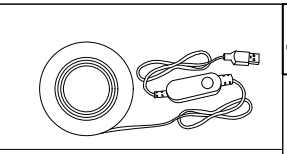

㊸×1PC

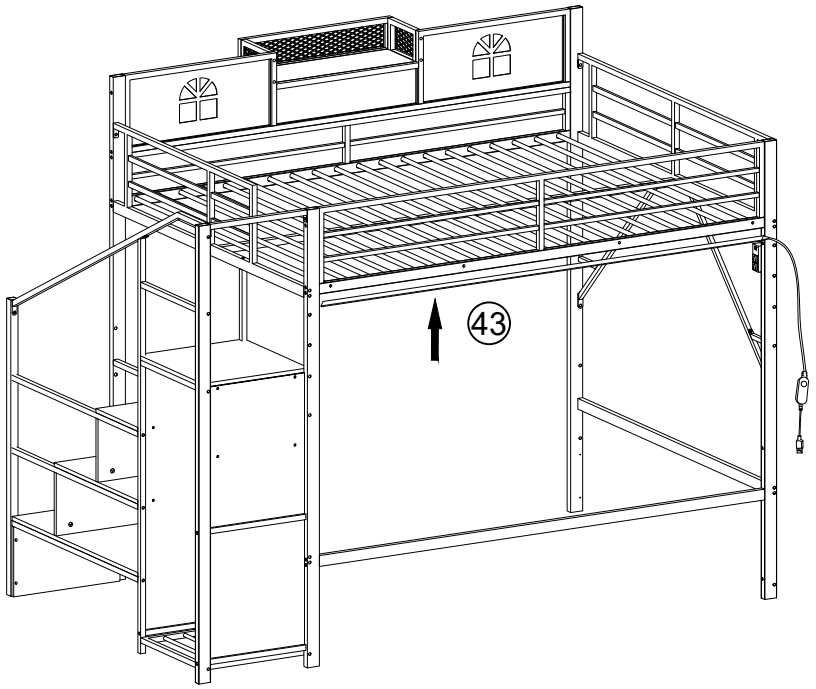

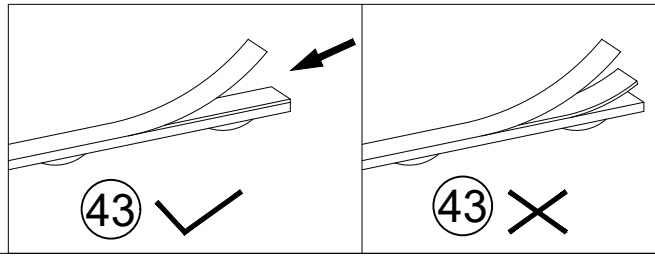

43

B

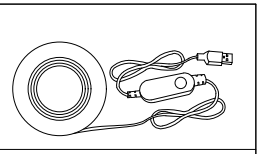

㊸×1PC

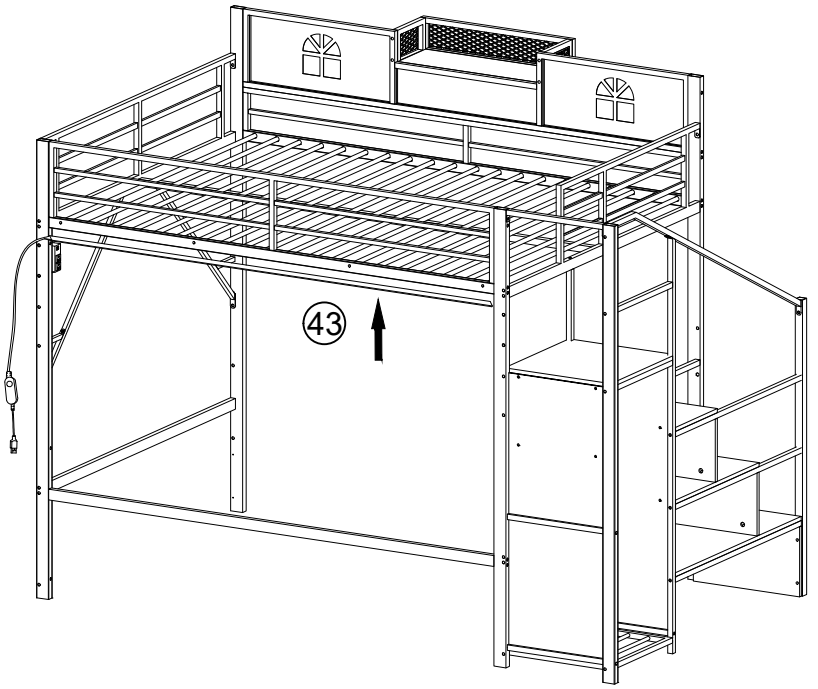

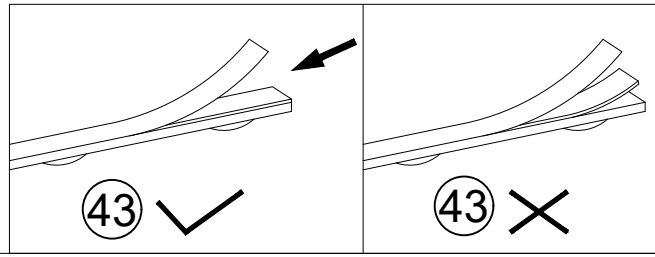

44

A

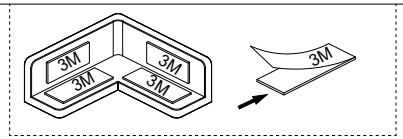

U	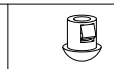	30
44		2

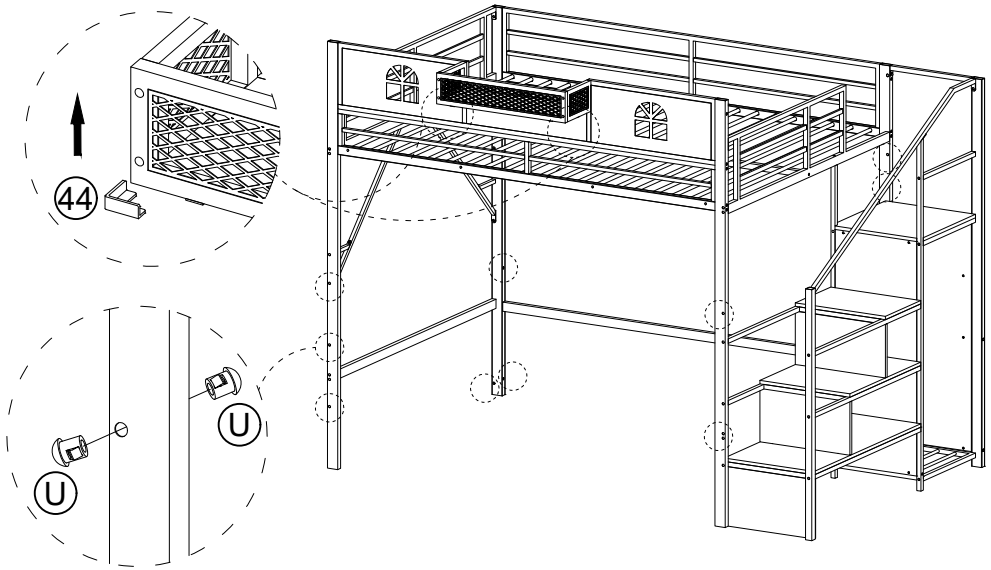

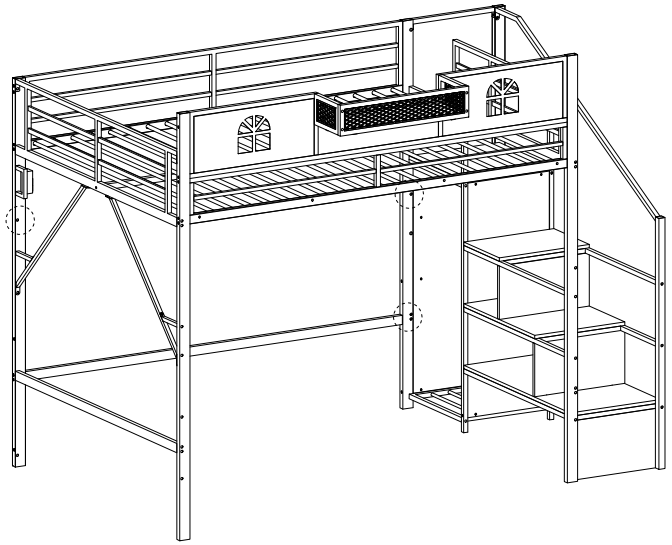

44

B

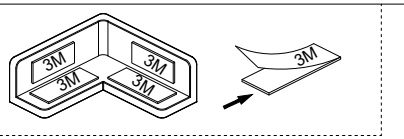

U		30
44		2

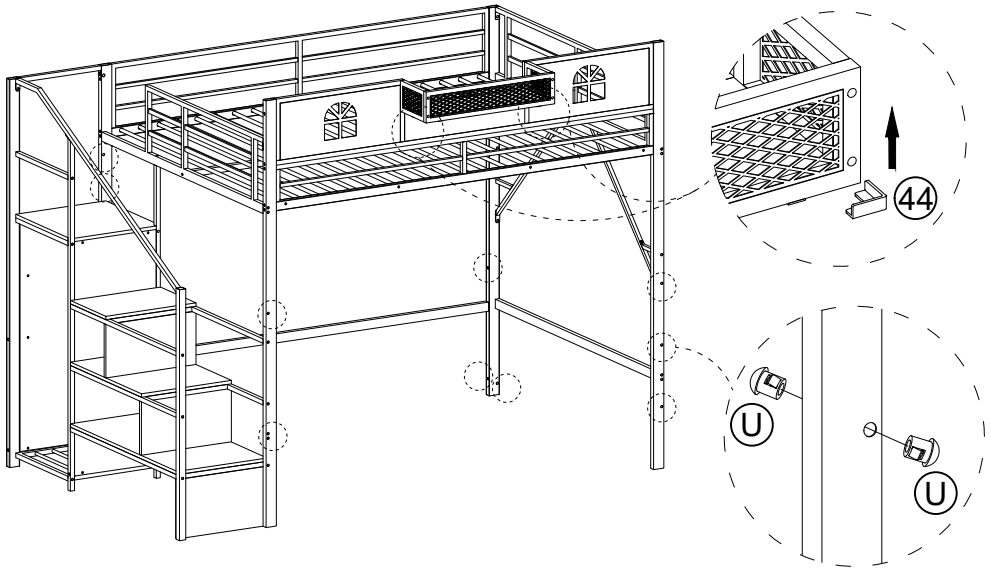

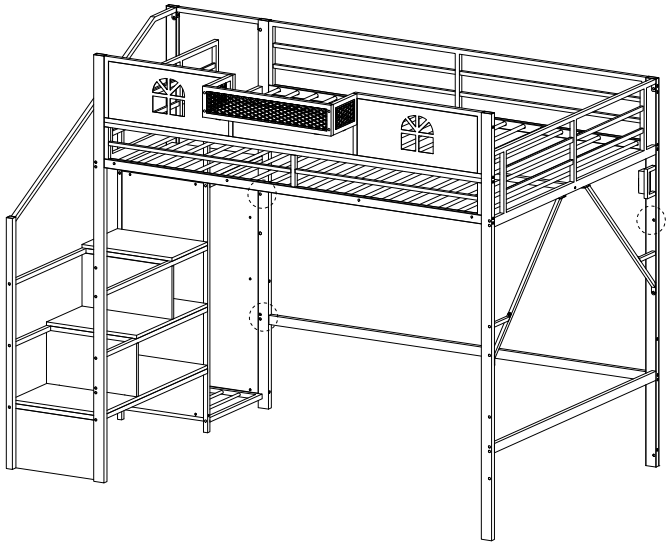

45

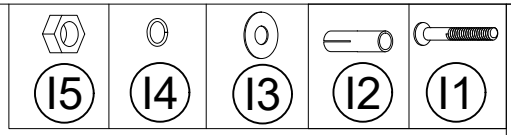

		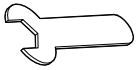	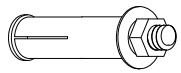	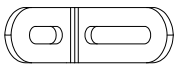
M4	M6×15mm			
S×1PC	L×2PCS	J×1PC	I×2PCS	H×2PCS

Step1

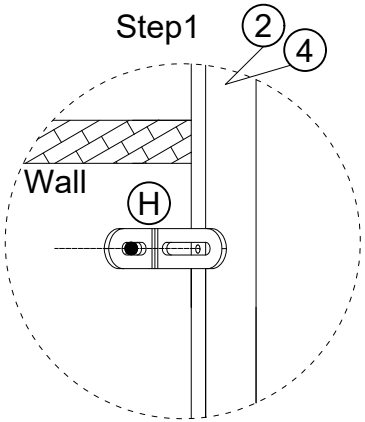

Step2

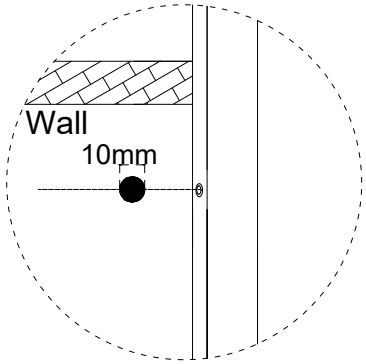

Step3

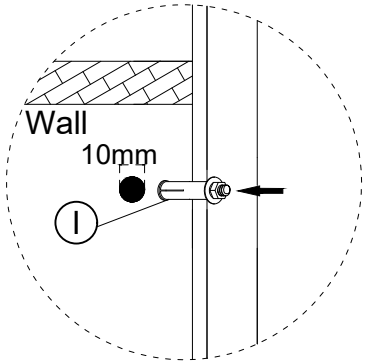

Step4

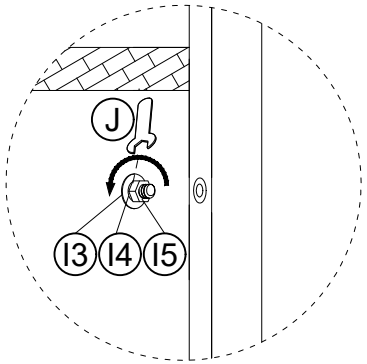

Step5

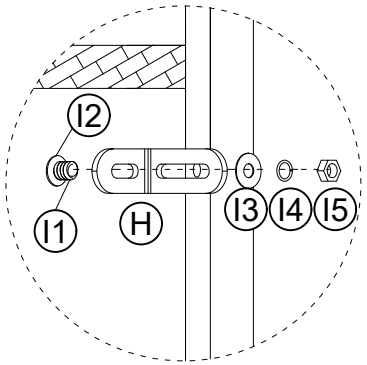

Step6

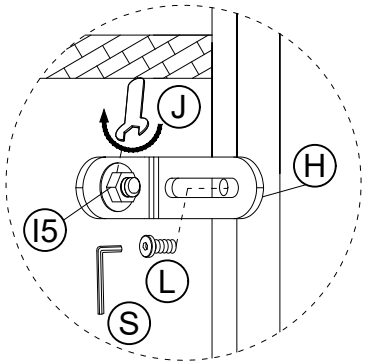

A

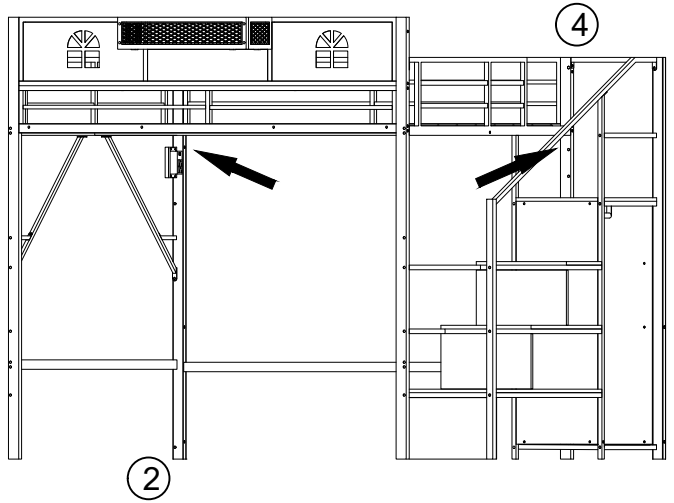

B

