Assembly Instructions

Caution: You must read this before you proceed

Care & Maintenance

- Not for commercial use. For residential use only.
- Do not put hot items directly on furniture surface.
- Do not clean furniture with harsh cleansers or polish.
- To obtain the longest lifespan of your outdoor products, minimizing exposure to direct sunlight is recommended.
- Children should not climb or jump on the furniture.
- Do not write on furniture without a padded barrier to protect the surface.
- To obtain the longest lifespan of your outdoor products, avoid extended and lengthy exposure to rain, snow, and direct sunshine. Whenever possible cover the product and /or place under patio or awnings.
- Stains may be removed with mild soap solution and damp cloth.

- Dust and pick-up spills using a clean, non-colored, lint-free cloth.

Please look in boxes for hardware packs and legs.
Sets often ship in multiple boxes and may arrive a day or two apart.

ROCKING CHAIR

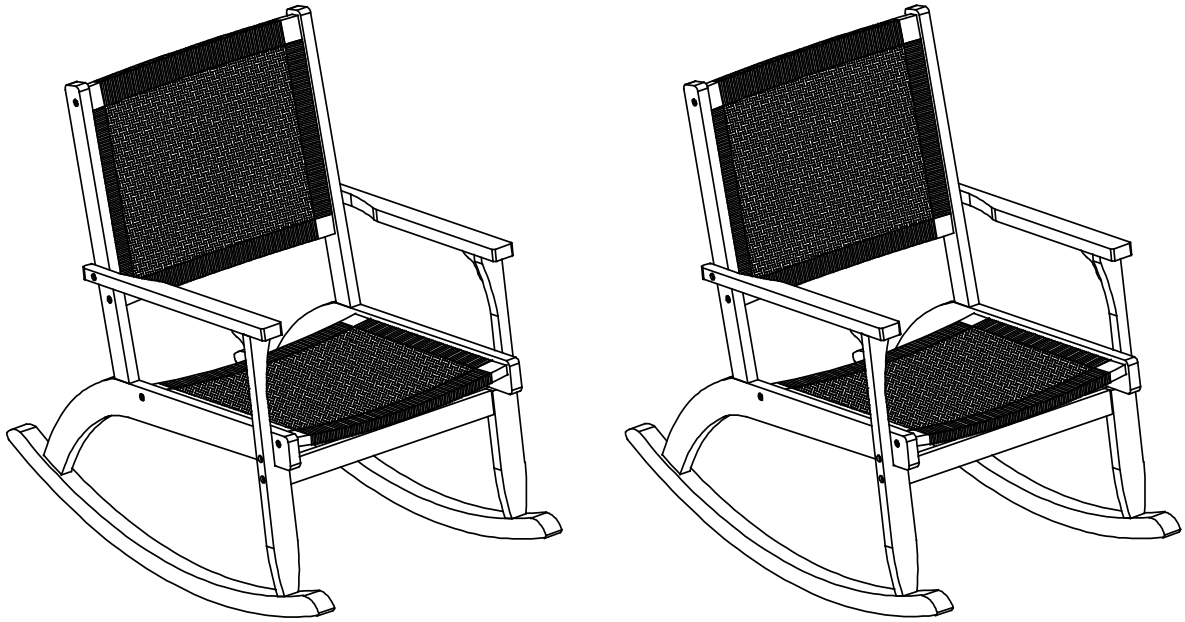

Parts List

Label	Picture	Description	QTY
A	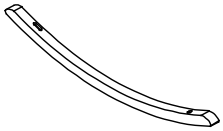	Left Rocking rail	2
B	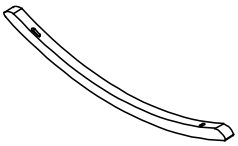	Right Rocking rail	2
C	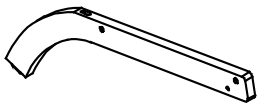	Left Leg	2
D	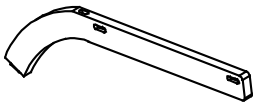	Right Leg	2
E	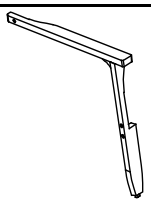	Left Arm	2
F	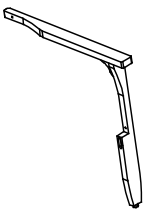	Right Arm	2

G	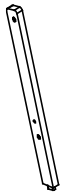	Left Back Rail	2
H		Right Back Rail	2
I	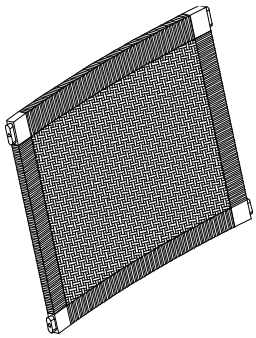	Back	2
J	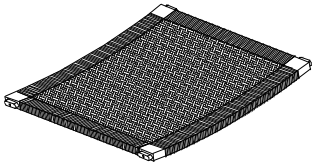	Seat	2
K	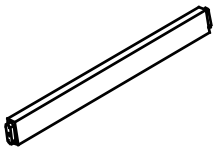	Support Seat	2

Hardware

Label	Picture	Description	QTY
①		Allen wrench	2
②		Bolt (5/16"*60MM)	4
③		Bolt (5/16"*55MM)	4
④		Screw (M7*90MM)	18
⑤		Screw (M7*60MM)	18

Assembly Preparation

Before Beginning Assembly:

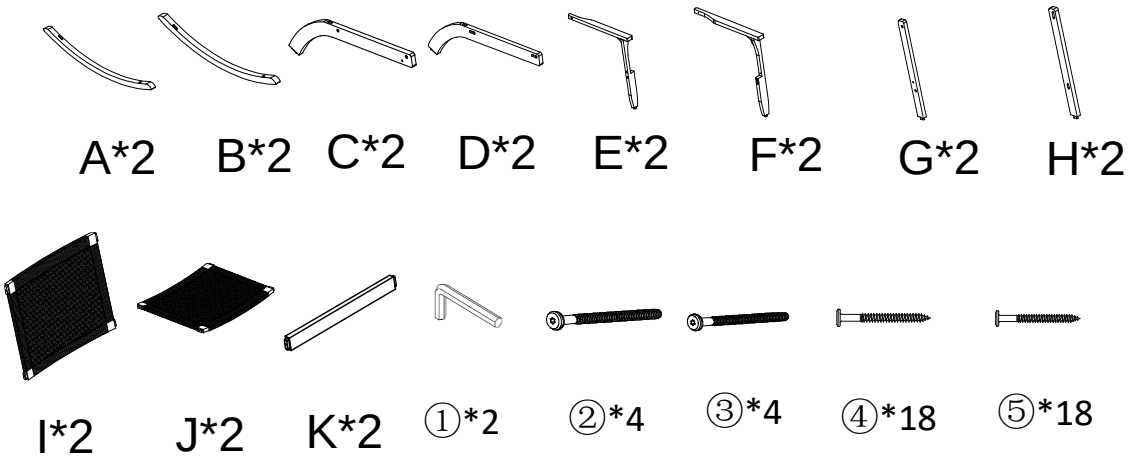

- Read instructions, cover to cover-
- Have 2 adults on hand for assembly-
- Do not assemble on flooring or carpet-
- Assemble on a clean non-marring surface (packing foam)-
- Save all packaging until finished-

Assembly Steps

Overview

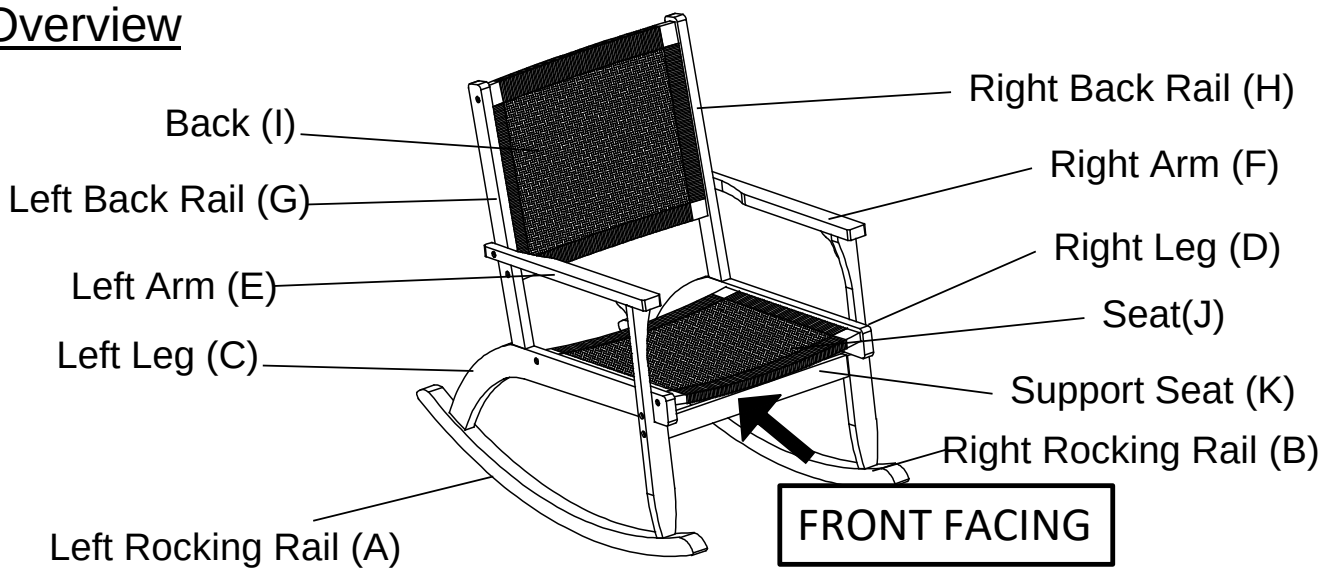

This Rocking Chair has multiple parts and may require up to 30 minutes to assemble. To give you an overview of the Chair parts, the above picture is to help you put the various parts into perspective. Please read through the instructions below to familiarise yourself with the parts and steps before assembly.

Step 1

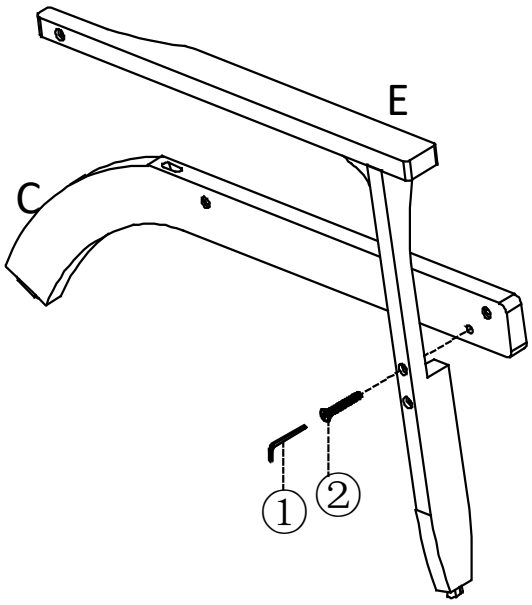

Open the carton and place all parts on a clean, non-marring surface.
Attach the Left Leg (C) to Left Arm (E), using Bolts (②) with Allen Wrench (①) as shown above.
If necessary, keep the plastic plug for repackaging.

Step 2

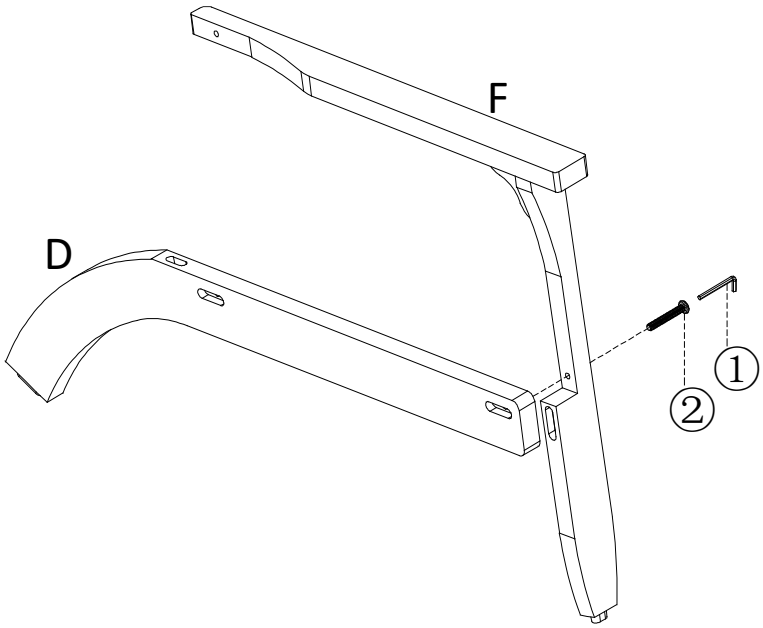

Attach the Right Leg (D) to Right Arm (F), using Bolts (②) with Allen Wrench (①) as shown above.
Do not fully tighten the Bolts.

Step 3

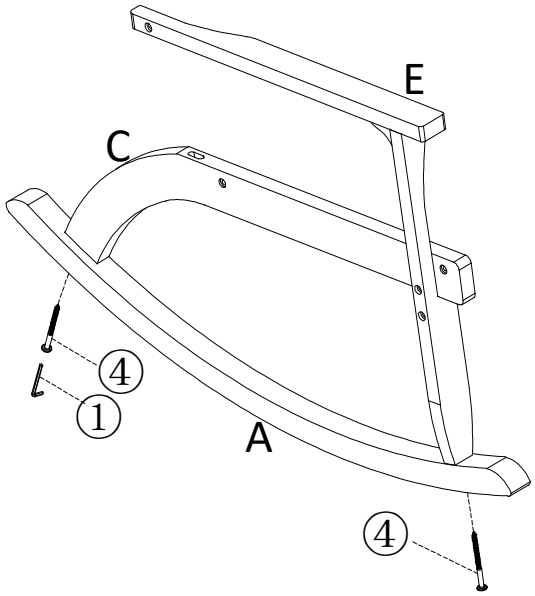

Attach the Left Rocking Rail (A) to Left Leg (C) and Left Arm (E), using Screw (④) with Allen Wrench (①) as shown above.
Do not fully tighten the Bolts.

Step 4

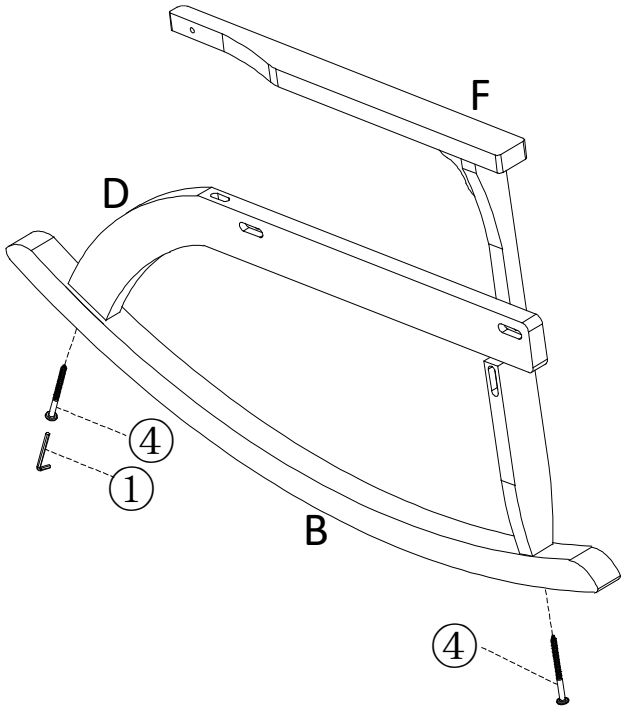

Attach the Right Rocking Rail (B) to Right Leg (D) and Right Arm (F), using Screw (④) with Allen Wrench (①) as shown above.
Do not fully tighten the Bolts.

Step 5

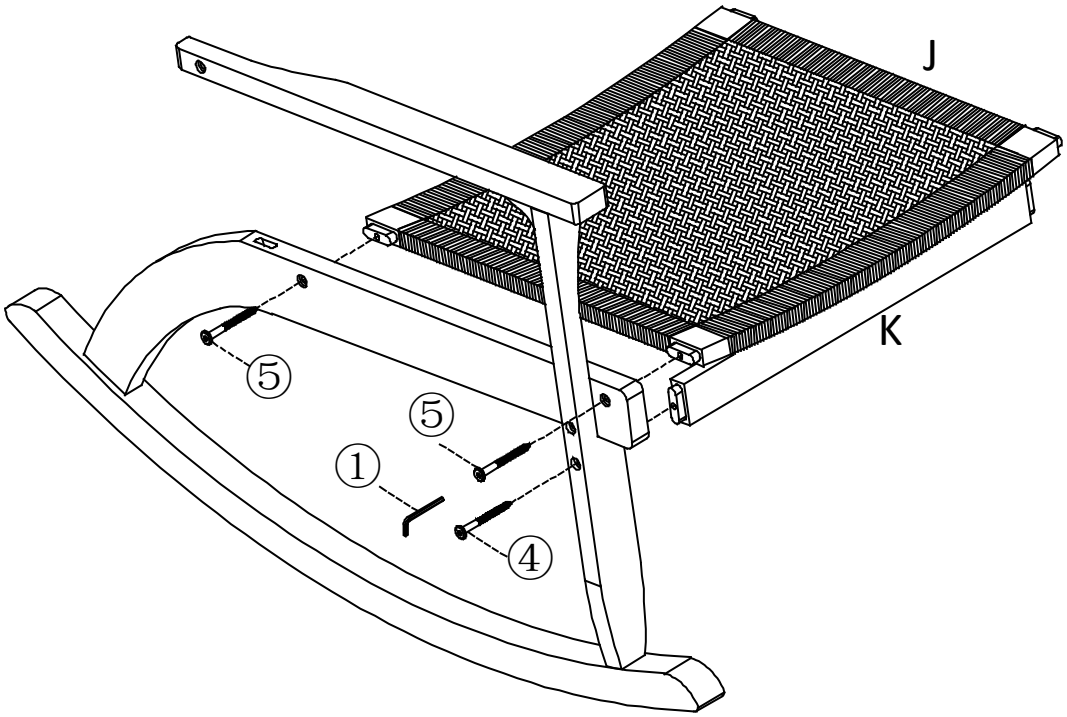

Attach the Seat (J) and Support Seat (K) to the Left Frame, using Screw (④), Screw (⑤) ,with Allen Wrench (①) as shown above.
Do not fully tighten the Bolts.

Step 6

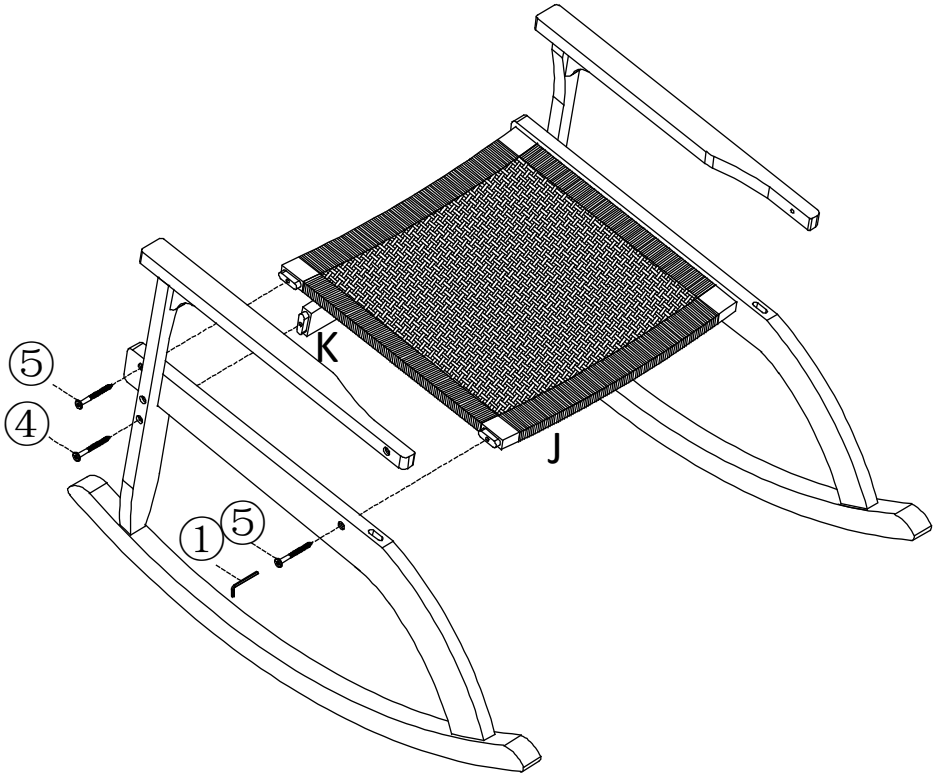

Attach the Right Frame to the Seat (J) and Support Seat (K), using Screw (④), Screw (⑤) ,with Allen Wrench (①) as shown above.
Do not fully tighten the Bolts.

Step 7

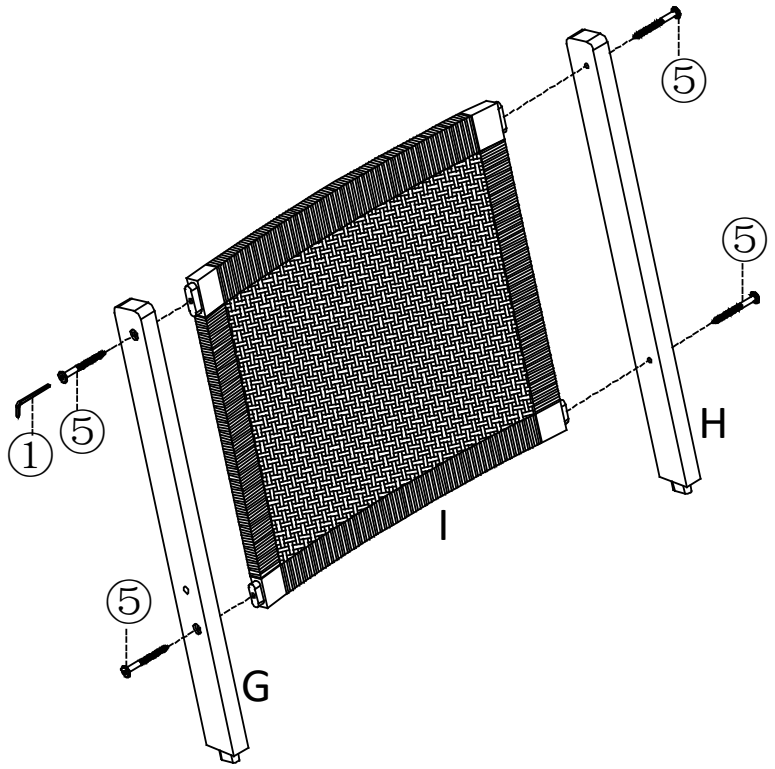

Attach the Back (I) to Left Back Rail (G) and Right Back Rail (H), using Screw (⑤), with Allen Wrench (①) as shown above.

Do not fully tighten the Bolts.

Step 8

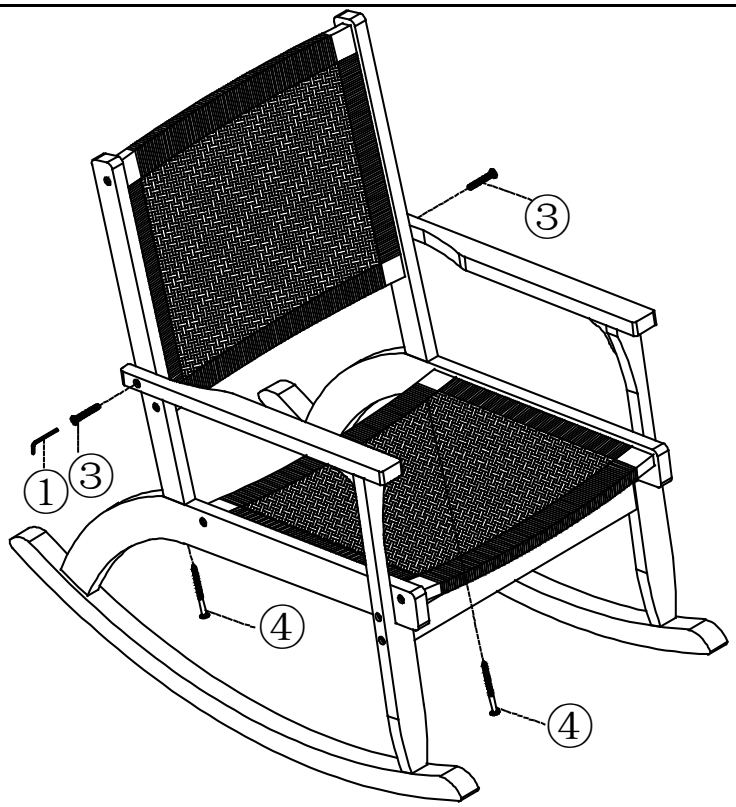

Attach the Back to Left and Arm Rocking chair, using Screw (④), Bolt (③), with Allen Wrench (①) as shown above.

Step 9	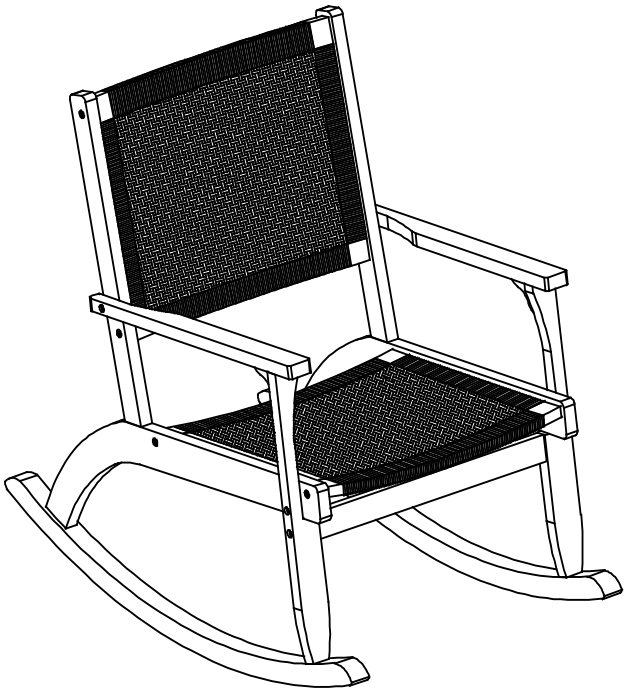

Place the Rocking Chair on a LEVEL SURFACE.
Inspect it and make sure all parts are adequately connected.
Gently and carefully sit onto the Chair.
This will help to align all parts at all joints.

Then get off the Rocking Chair, and in asequential manner, proceed to tighten all Bolts.
When tightening the Bolts, tighten sequentially.
DO NOT tighten any Bolt fully and then move on to the next one.
This may cause the frame to warp.
If there are still wobbles, loosen the Bolts and execute this same process.
Note: This step is done best with the assistance of a second adult.

Ensure all screws are fully locked into position.
Your Rocking Chair is ready for use.
Caution: This Chair can only be used on a flat, level surface.

Questions & Answers about Proposition 65

• What is Proposition 65?

Proposition 65 requires businesses to provide warnings to Californians about significant exposures to chemicals that cause cancer, birth defects or other reproductive harm. These chemicals can be in the products that Californians purchase, in their homes or workplaces, or that are released into the environment. By requiring that this information be provided, Proposition 65 enables Californians to make informed decisions about their exposures to these chemicals.

Proposition 65 also prohibits California businesses from knowingly discharging significant amounts of listed chemicals into sources of drinking water.

Proposition 65 requires California to publish a list of chemicals known to cause cancer, birth defects or other reproductive harm. This list, which must be updated at least once a year, has grown to include approximately 900 chemicals since it was first published in 1987.

• What types of chemicals are on the Proposition 65 list?

The list contains a wide range of naturally occurring and synthetic chemicals that include additives or ingredients in pesticides, common household products, food, drugs, dyes, or solvents. Listed chemicals may also be used in manufacturing and construction, or they may be byproducts of chemical processes, such as motor vehicle exhaust.

• What does a warning mean?

If a warning is placed on a product label or posted or distributed at a workplace, a business, or in rental housing, the business issuing the warning is aware or believes that it is exposing individuals to one or more listed chemicals.

By law, a warning must be given for listed chemicals unless the exposure is low enough to pose no significant risk of cancer or is significantly below levels observed to cause birth defects or other reproductive harm.

• Where can I get more information on Proposition 65?

If you have specific questions on the administration or implementation of Proposition 65, you can contact OEHHA's Proposition 65 program at P65.Questions@oehha.ca.gov, or by phone at (916) 445-6900.