1

Coffee Table Installation Instructions

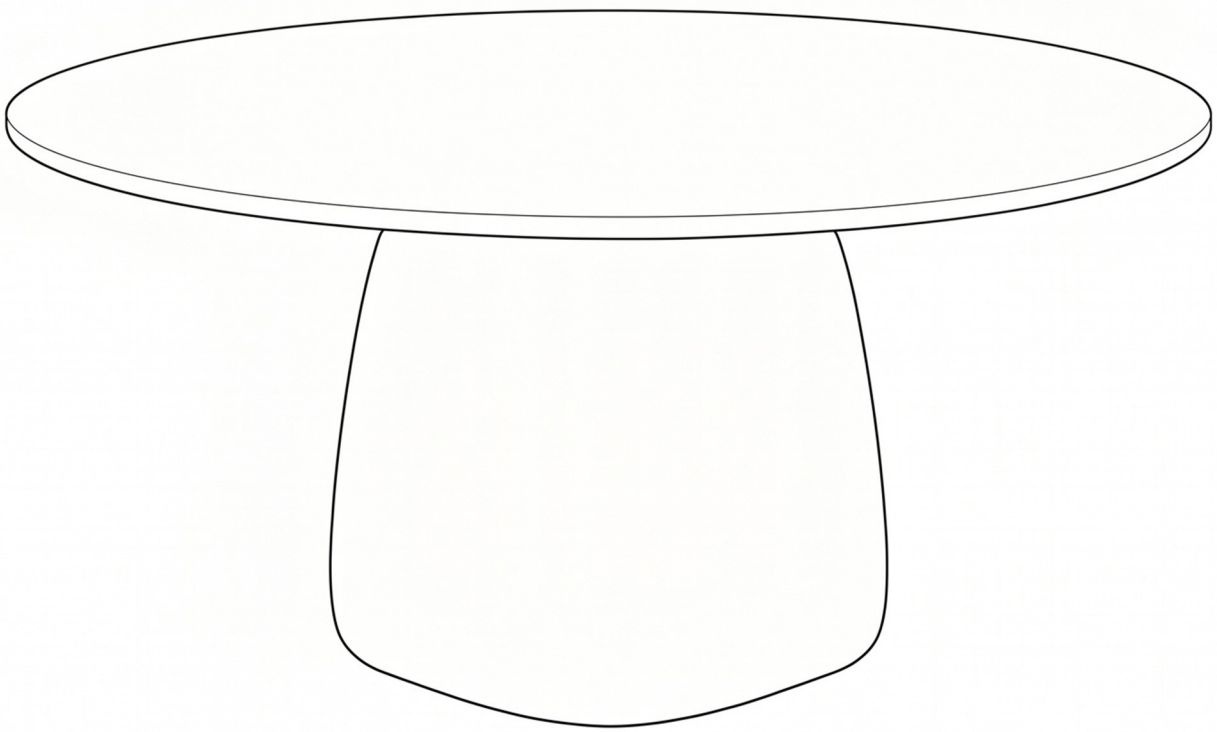

Important Preparation Notes

1. Read this entire instruction manual thoroughly before you begin assembly.
2. This product is delivered in 3 separate packages. Please confirm you have received all packages upon delivery.
3. Inspect the outer cartons for signs of damage. If no external damage is found, open the packages and check that all parts are present and free of defects (refer to the parts list).

Safety & Assembly Precautions

1. Assembly is strongly recommended for two people.
2. When fitting multiple screws: loosely insert all screws first, then tighten them gradually and evenly. Do not fully tighten any single screw before all others are in place.
3. Avoid over-tightening screws, as this may strip threads or damage wooden components.

3

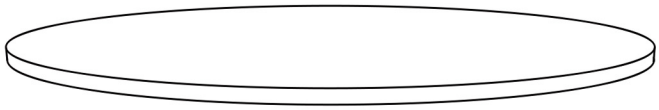

②Tabletop×1

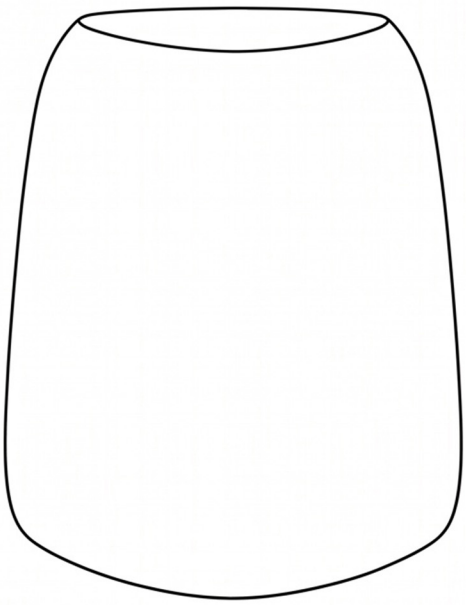

①Base×1

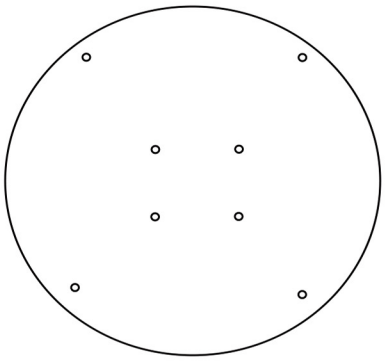

③Connecting plate×1

a ×1	b ×10	c ×10
	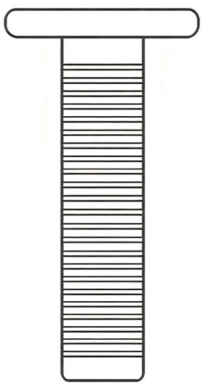	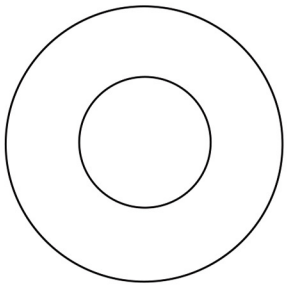
Hex screwdriver	Screws	Screw washers

Installation components

4

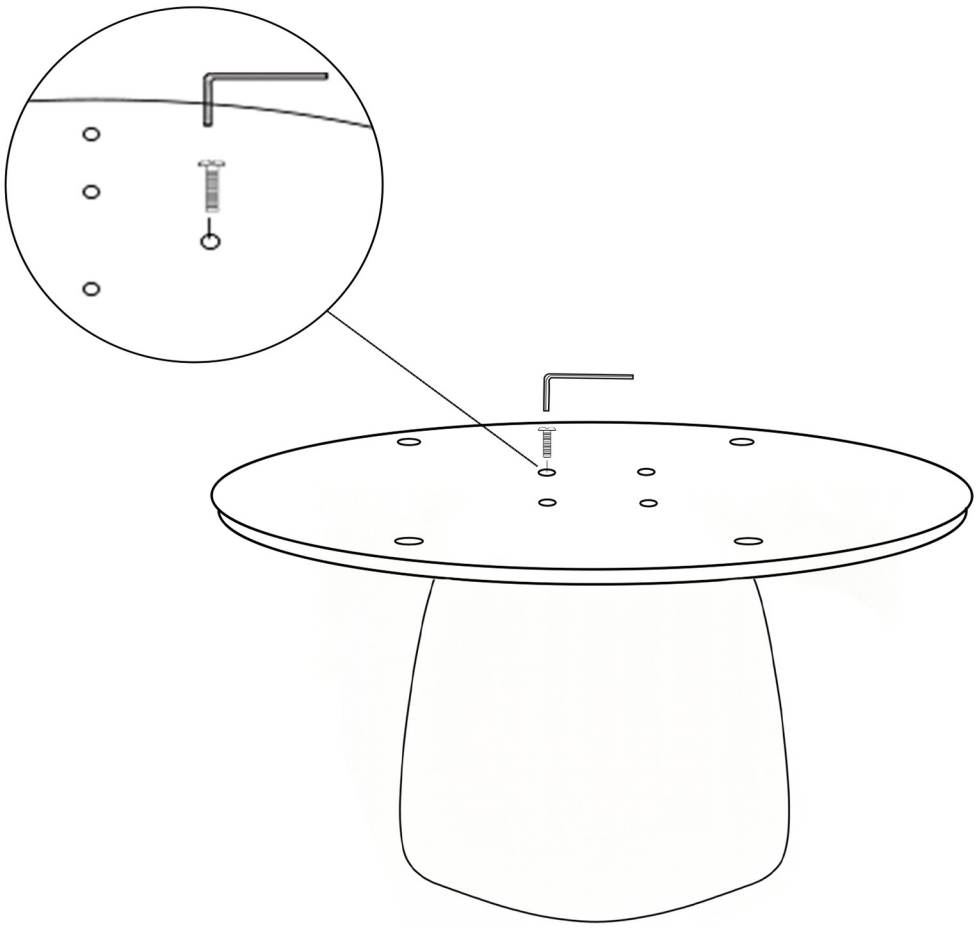

Step 1: Attach the Connecting plate to the Base

1. Align the pre-drilled holes of the connecting plate with the corresponding holes on the base.
2. Insert all screws into position but leave them loosely fastened — do not fully tighten at this stage.
3. Once all screws are fitted, tighten them evenly with the Allen key.

5

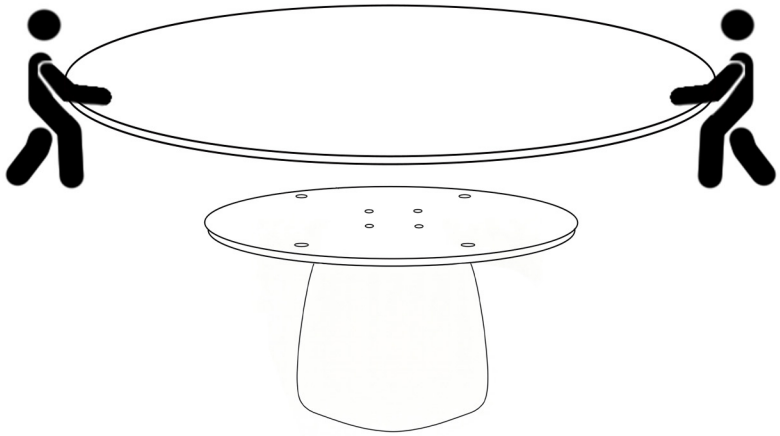

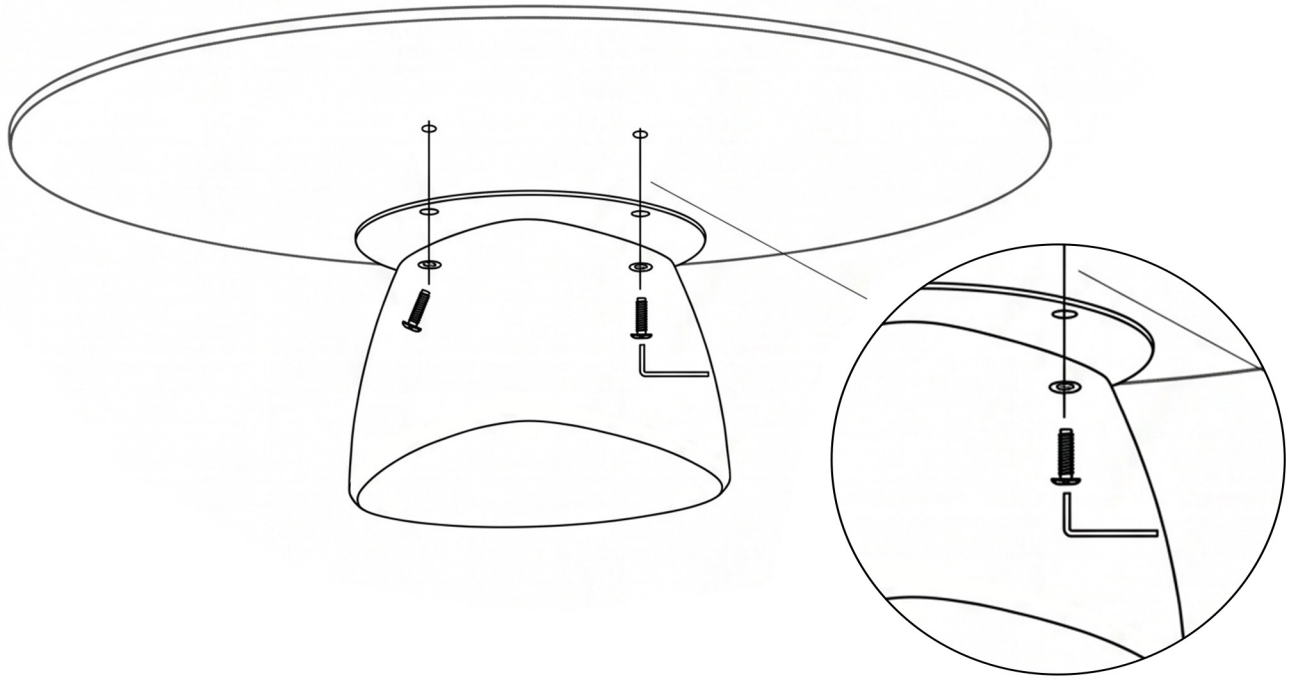

Step 2: Mount the Tabletop

1. With two people, carefully lift the tabletop.
2. Lower the tabletop gently onto the pre-assembled base.
3. If required, rotate the tabletop slightly to match the pre-drilled holes on its underside to the holes on the base.
4. Loosely insert all tabletop mounting screws.
5. After all holes are fully aligned, tighten all screws gradually and evenly.

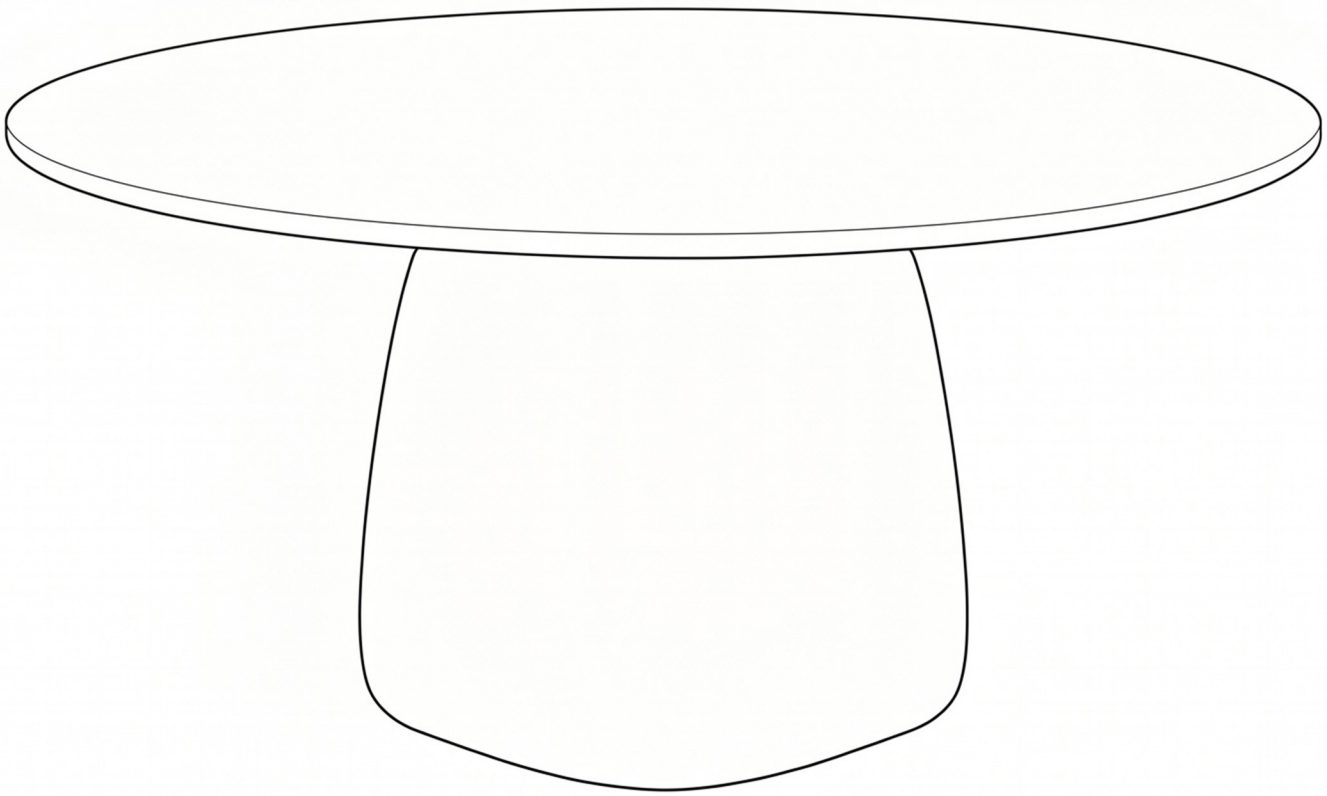

Step 3: Final Inspection

1. Double check that every screw has been tightened securely.
2. Gently rock the table to verify it stands stable, with no wobble or abnormal rattling.

Your assembly is now complete!