Assembly Instructions

Caution : You must read this before you proceed

Care & Maintenance



- Not for commercial use. For residential use only.



- Furniture may scratch floors. We recommend using furniture pads to protect your floors.



- Do not put hot items directly on furniture surface.



- Do not clean furniture with harsh cleansers or polish.



- Do not place furniture under direct sunlight.



- Do not place furniture near heating or cooling vents.



- Do not write on furniture without a padded barrier to protect the surface.



- Do not place furniture outside . For indoor use only.



- Stains may be removed with mild soap solution and damp cloth.



- Children should not climb or jump on the furniture.



- Dust and pick-up spills using a clean, non-colored, lint-free cloth.

Please see the bed section to find the hardware and bed leg.

Sets often ship in multiple boxes and may arrive a day or two apart.

KING BED
N761P556496

! WARNING !

STRANGGULATION HAZARD
NEVER place bed near windows where cords from blinds or drapes may strangle achild.
NEVER suspend strings over bed.
NEVER place items with astring, cord, or ribbon, such as hood strings or pacifercords, around a child's neck. These items may catch on bed parts.
ALWAYS follow assembly instructions.
Not intended for children under the age of six. INFANTS HAVE DIED FROMBECOMING ENTRAPPED IN BEDs. Openings in and between bed parts can entrapthe neck and head of a small child.
NEVER use bed for child under the age of six.
The mattress must be appropriately sized for the bed. If the mattress is undersizeddangerous gaps can exits and a person can become entrapped or entangled in the frame and suffocate

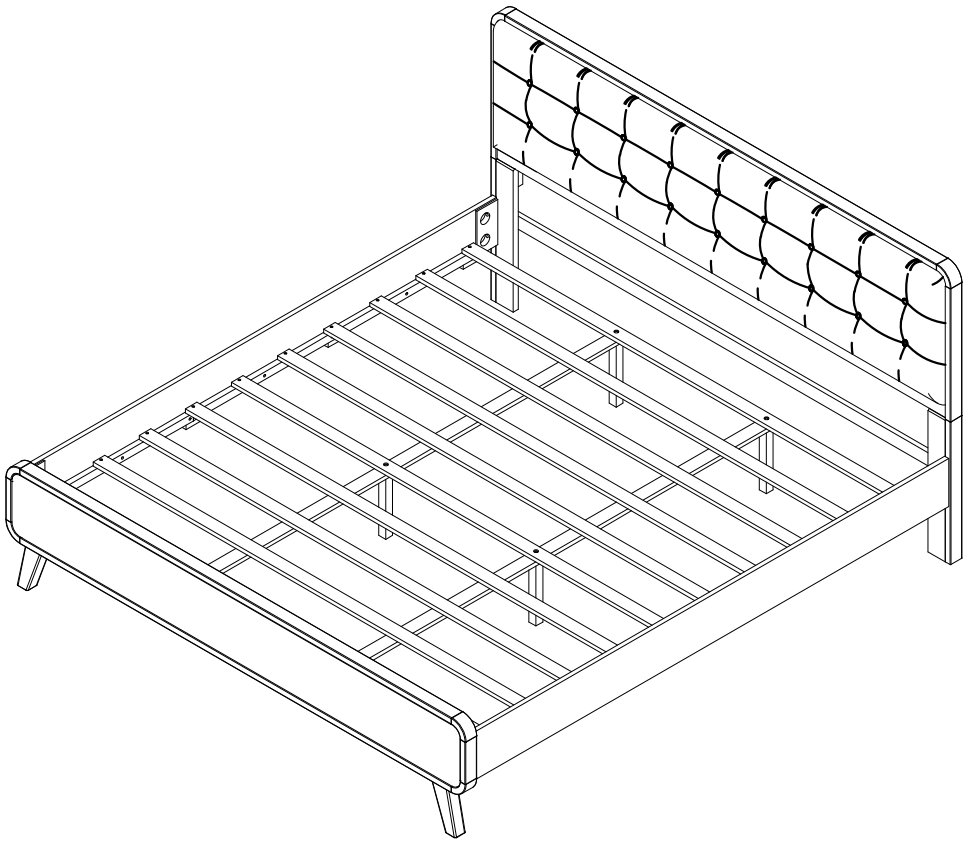

CAUTION: This King Bed is NOT a TOY.
Keep your child / children at bay in the process of assembly.
For turning the King Bed and to prevent damage to the King Bed.
02 persons may be needed to execute this action.

DETAIL VIEW

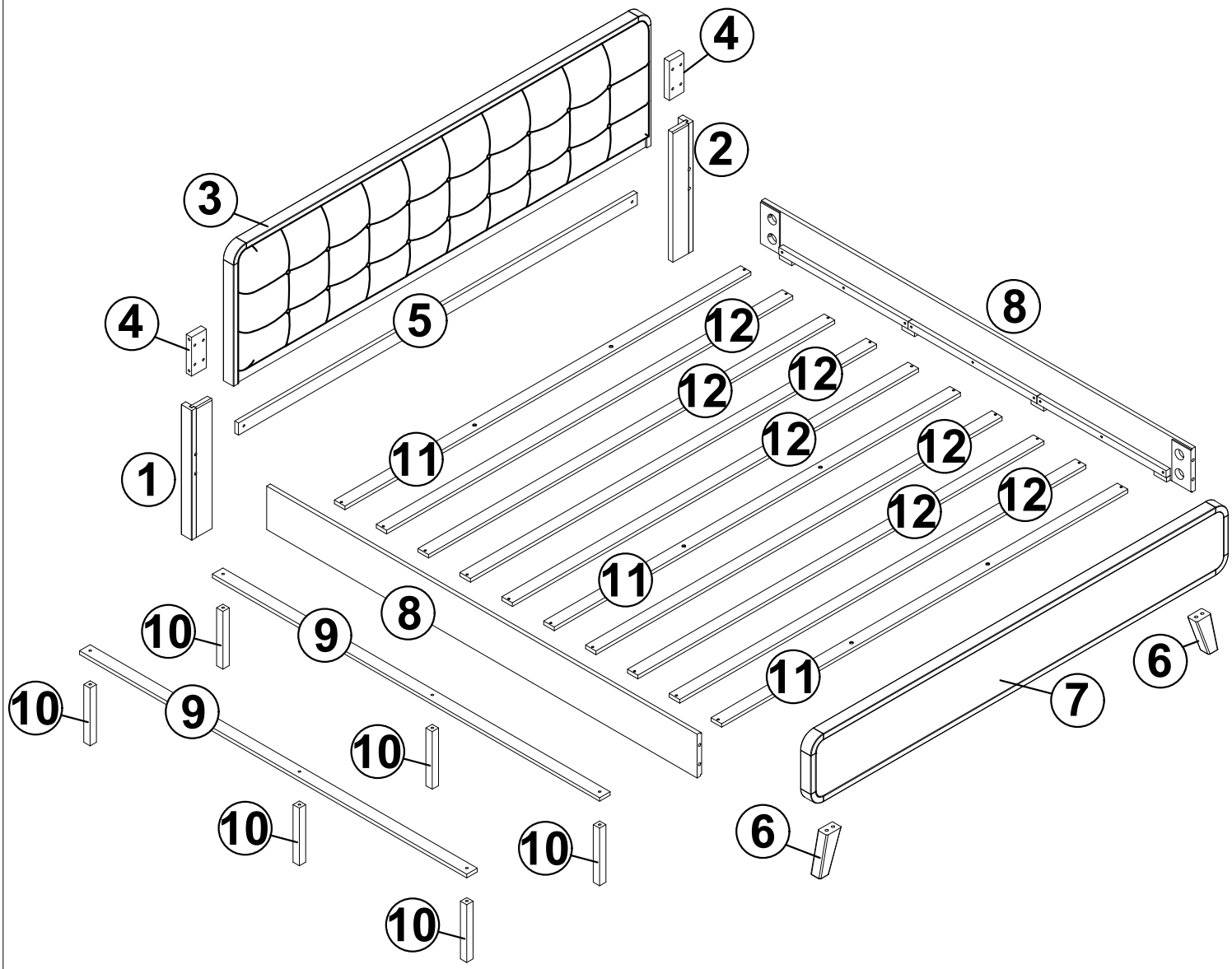

PARTS LIST: N761P556496

①	Leg - left (Headboard) 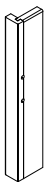	1PC
②	Leg - right (Headboard) 	1PC
③	Upholstered headboard 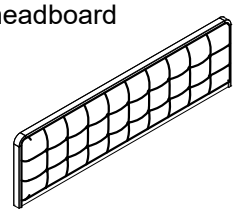	1PC
④	Tie rod 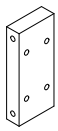	2PCS
⑤	Lower - Horizontal bar (Headboard) 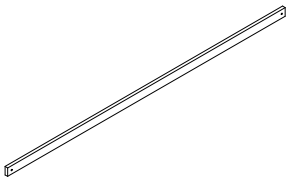	1PC
⑥	Legs 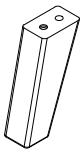	2PCS
⑦	Footboard frame 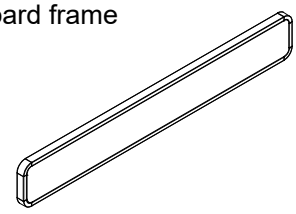	1PC
⑧	Side Rails 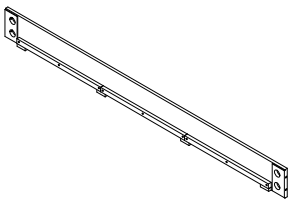	2PCS
⑨	Middle support bar 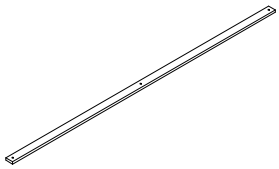	2PCS
⑩	Middle legs 	6PCS
⑪	Outer slats 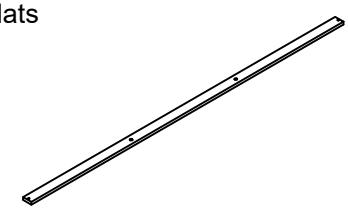	3PCS
⑫	Slats 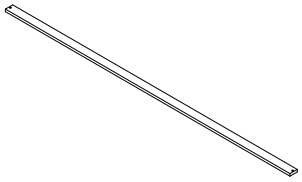	7PCS

Hardware (Each of the above hardware Including exxtra 1 pc)

Label	Picture	Description	Q.ty
A		Bolts Ø1/4 x 55mm	6+ 1
B		Double-threaded bolts Ø5/16" x 80mm	8 + 1
C		Semicircular washers 28 x 15 x 7 mm	8 + 1
D		Hexagonal nuts Ø5/16"	8 + 1
E		Wood screws M4 x 25	20 + 1
F		Wood dowels Ø8 x 30	4 + 1
G	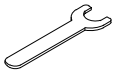	Wrench	1
H		Allen Wrench	1
J		Bolts Ø1/4 x 30mm	10+ 1
K		Bolts Ø5/16 x 50mm	2+ 1
L		Wood dowels Ø10 x 30	2+ 1

HARDWARE LIST: N761P556496

Assembly Preparation

Before Begining Assembly

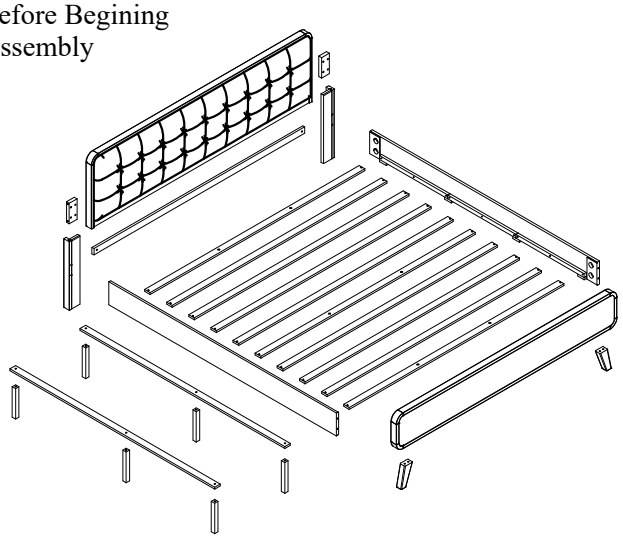

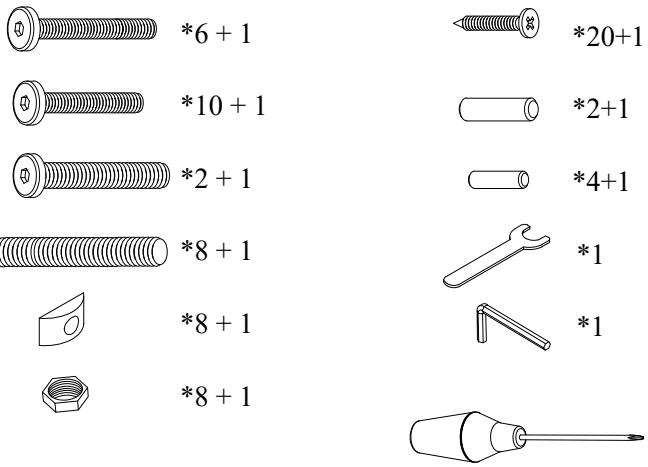

ASSEMBLY TOOLS REQUIRED (NOT INCLUDED)

- Read instructions, cover to cover-
- Have 2 adults on hand for assembly-
- Do not assemble on flooring or carpet-
- Assemble on a clean non-marring surface (packing foam)-
- Save all packaging until finished-

Overview

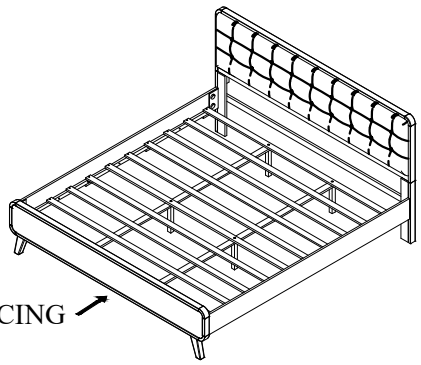

This bed has multiple parts and may require up to some 1 hour to assemble.
To give you an overview of the bed parts, the above picture is to help you put the various parts into perspective .
Please read through the instructions here below to familiarise the parts and steps before assembly.

STEP 1

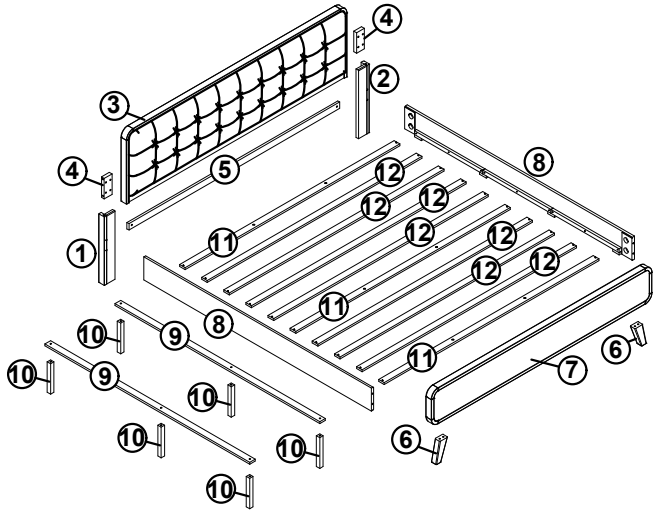

Unpack and place all part on a clean, non-marring surface.

STEP 2

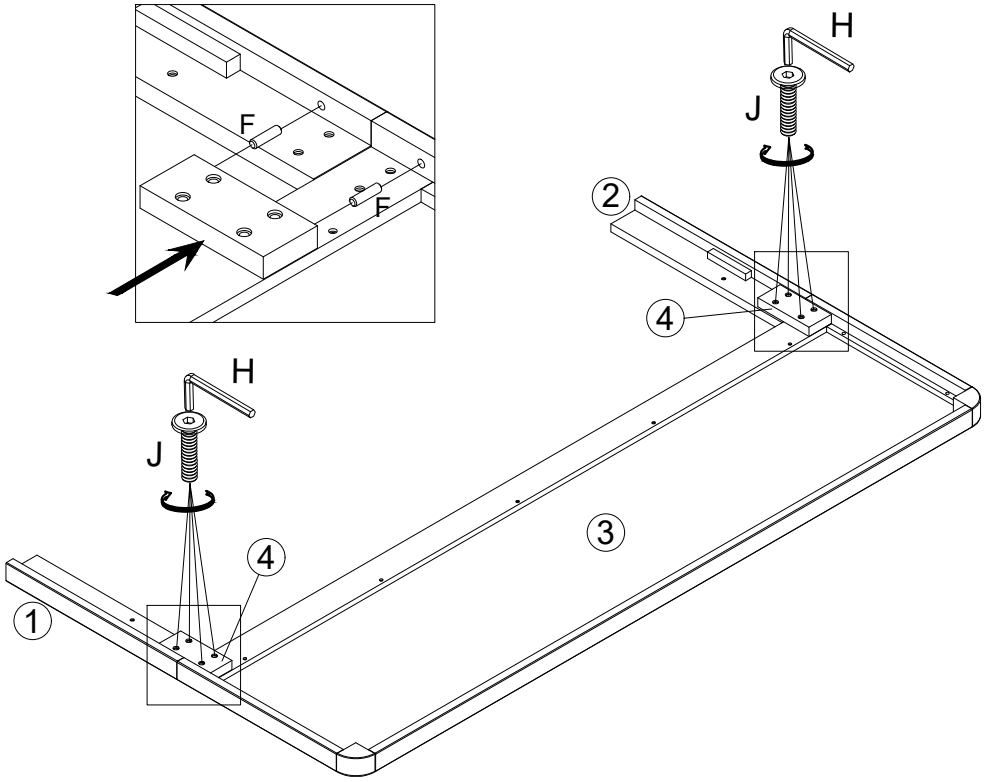

Attach the Tie rod④to Upholstered headboard③, Leg - left (Headboard)①and Leg - right (Headboard) ②, secure it with 4 Wood dowels Ⓕ, then tighten using 8 Bolts Ⓙand the Allen Wrench Ⓗ.

STEP 3

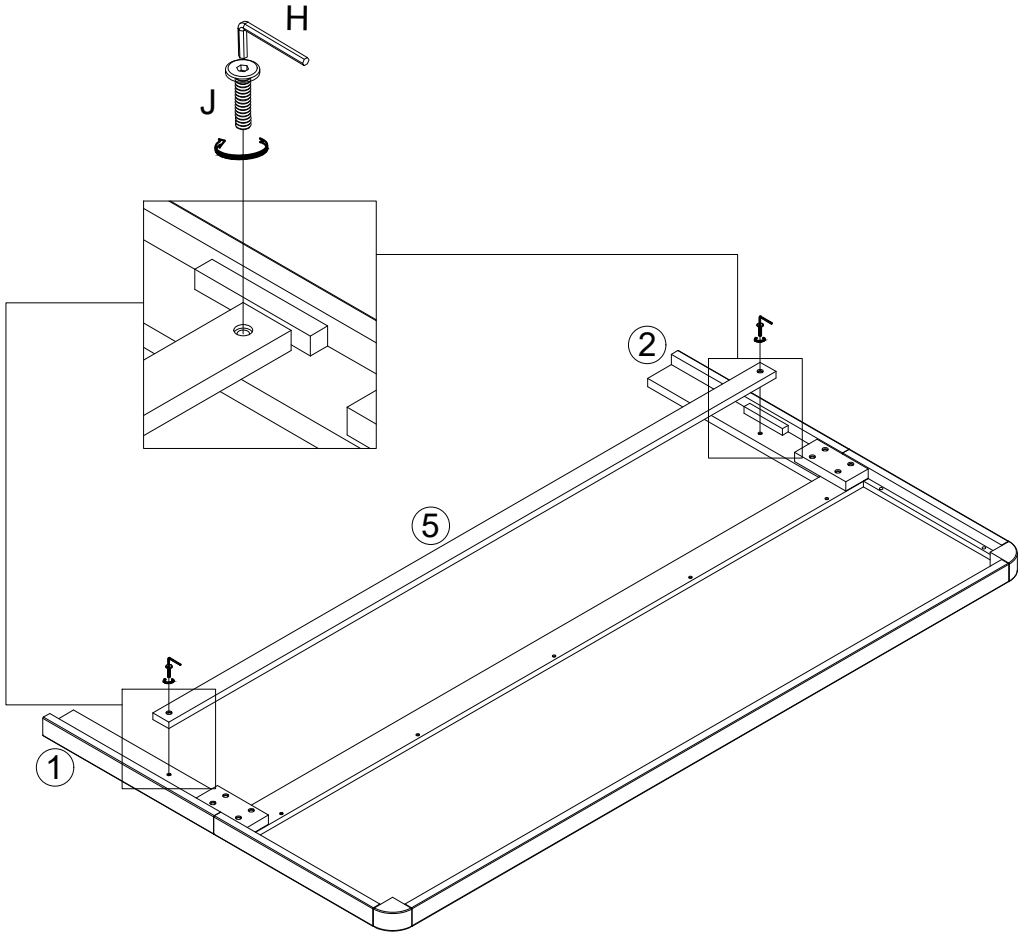

Attach Lower - Horizontal bar (Headboard)⑤to Leg - left (Headboard)①and Leg - right (Headboard) ②, using 2 Bolts Ⓙand the Allen Wrench Ⓗto tighten.

STEP 4

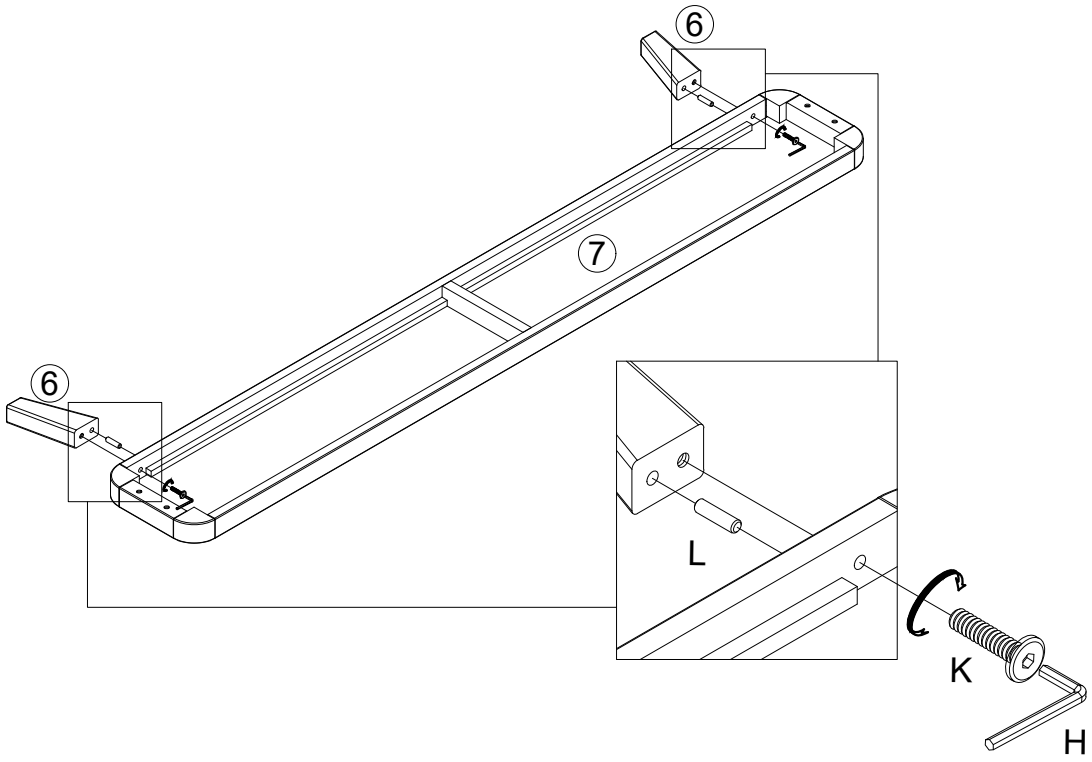

Attach the Legs⑥to Footboard frame⑦, secure it with 2 Wood dowelsⓁ, then tighten using 2 BoltsⓀand the Allen WrenchⒽ.

STEP 5

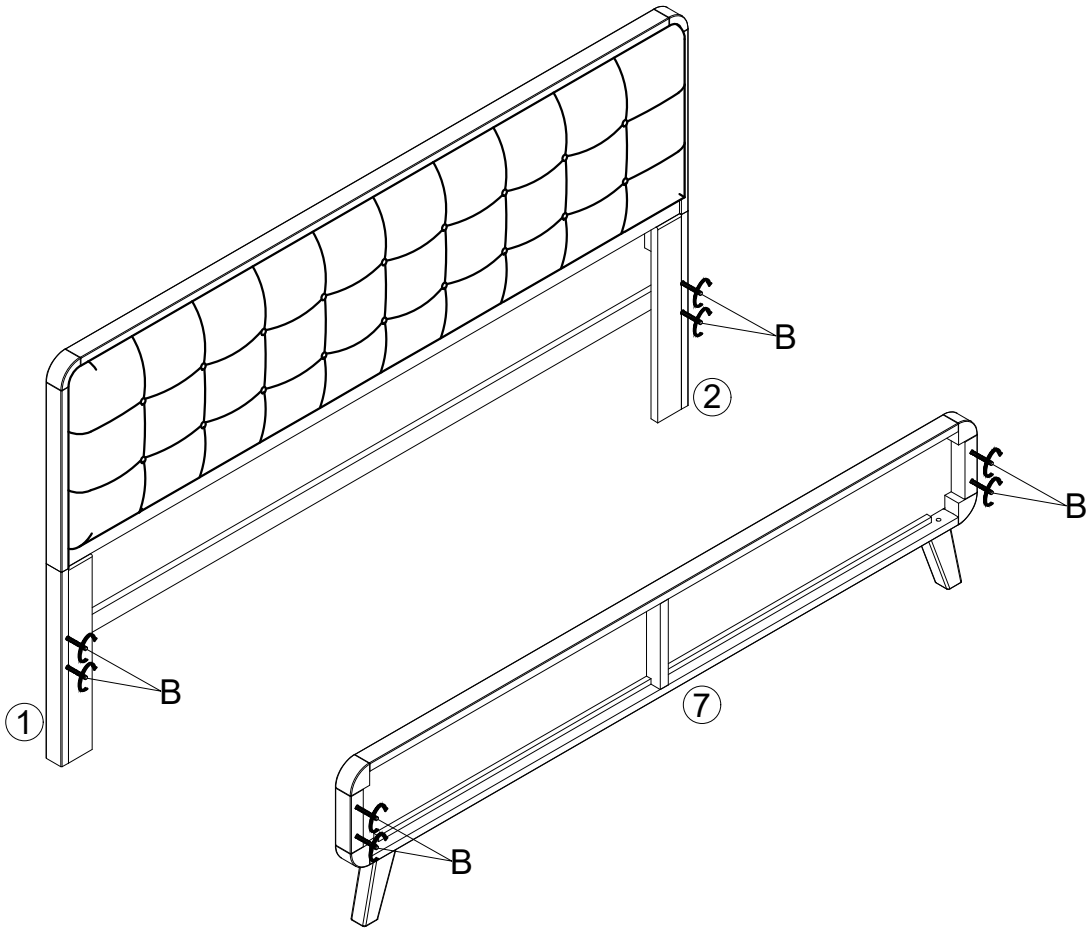

Attach 4 Double-threaded boltsⒷinto Leg - left (Headboard)①and Leg - right (Headboard)②and 4 Double-threaded boltsⒷinto Footboard frame⑦

STEP 6

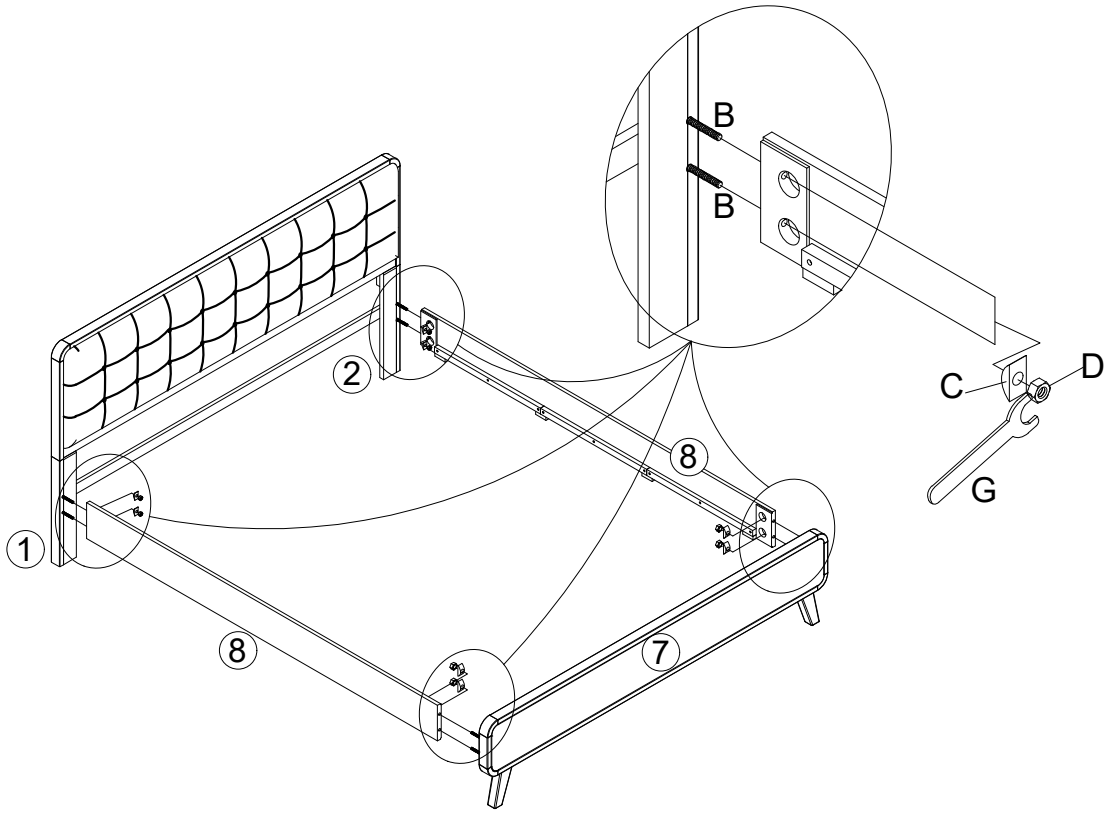

Attach the Side rails ⑧ to Leg - left (Headboard) ① & Leg - right (Headboard) ② and Footboard frame ⑦ by sliding them onto the Double-threaded bolts Ⓑ. Secure using 8 Semicircular washer Ⓒ and 8 Hexagonal nut Ⓓ, then tighten firmly with the Wrench Ⓖ.

STEP 7

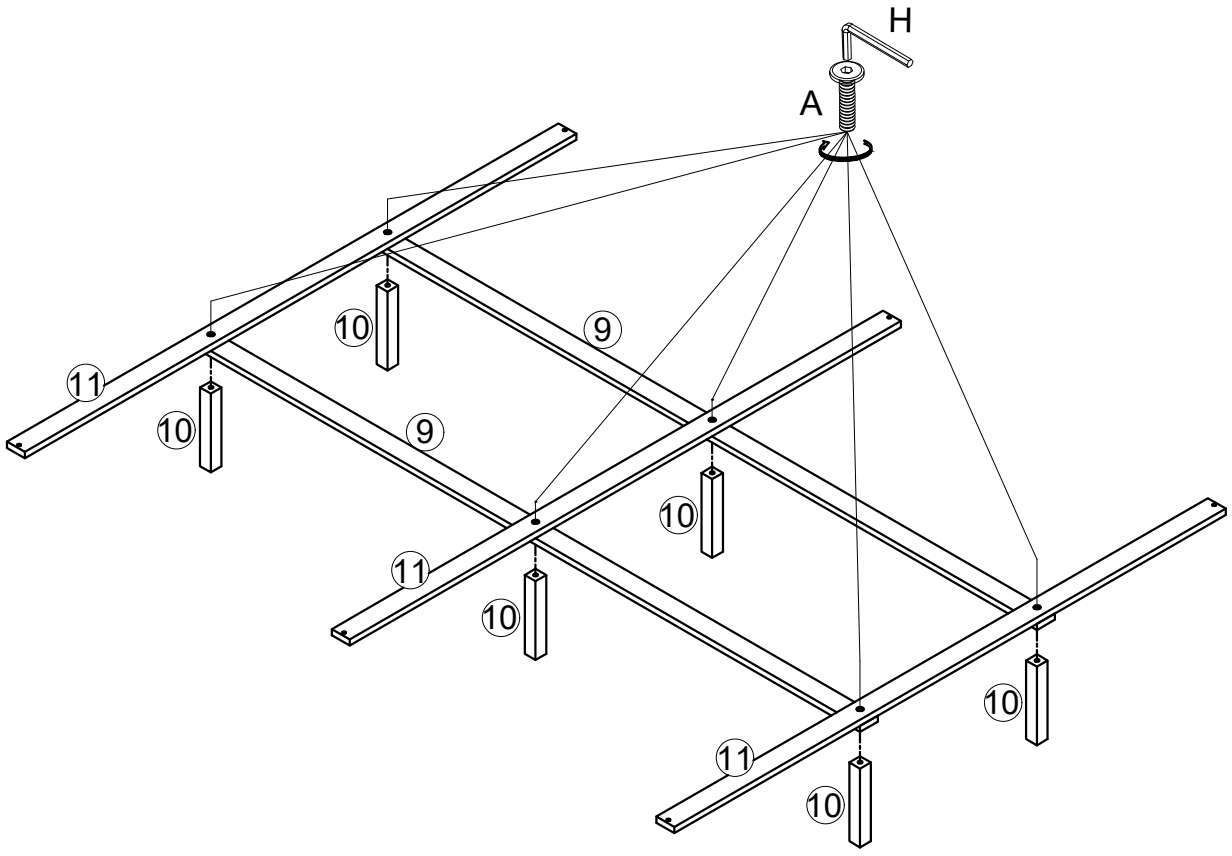

Attach 3 pcs Outer slats ⑪ and the Middle support bar ⑨ to the 6 pcs Middle legs ⑩ using 6 pcs Bolts Ⓐ and Allen Wrench Ⓗ to tighten them.

STEP 8

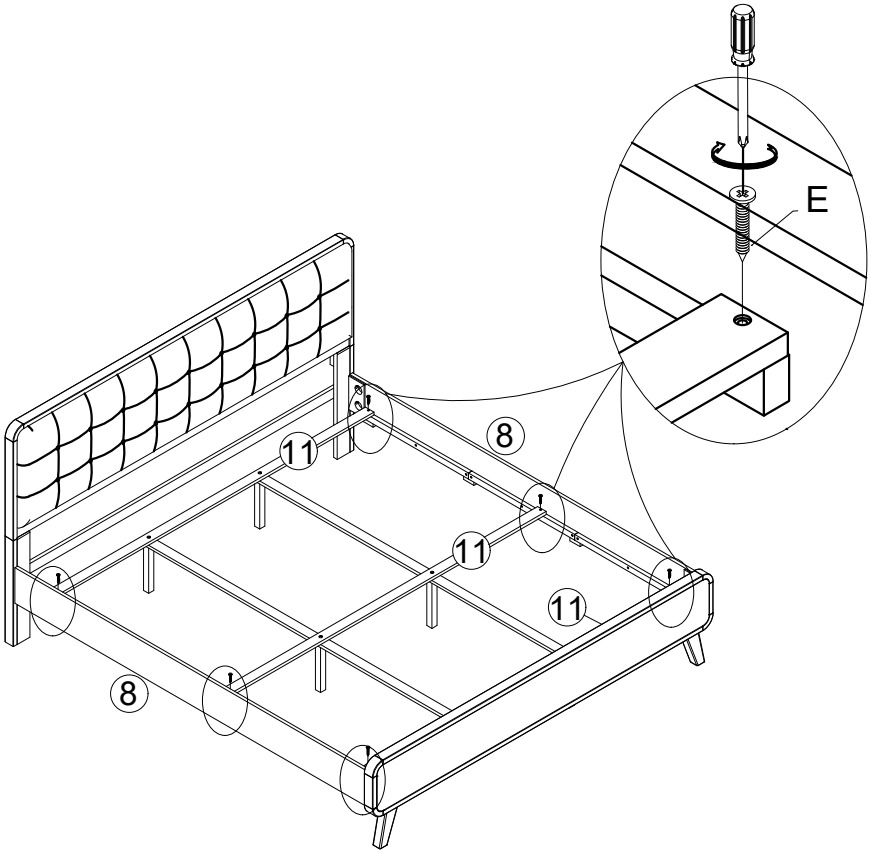

Place the Outer slats ⑪ onto the Side Rails ⑧ and secure using 6 Wood screws Ⓔ to tighten them.

STEP 9

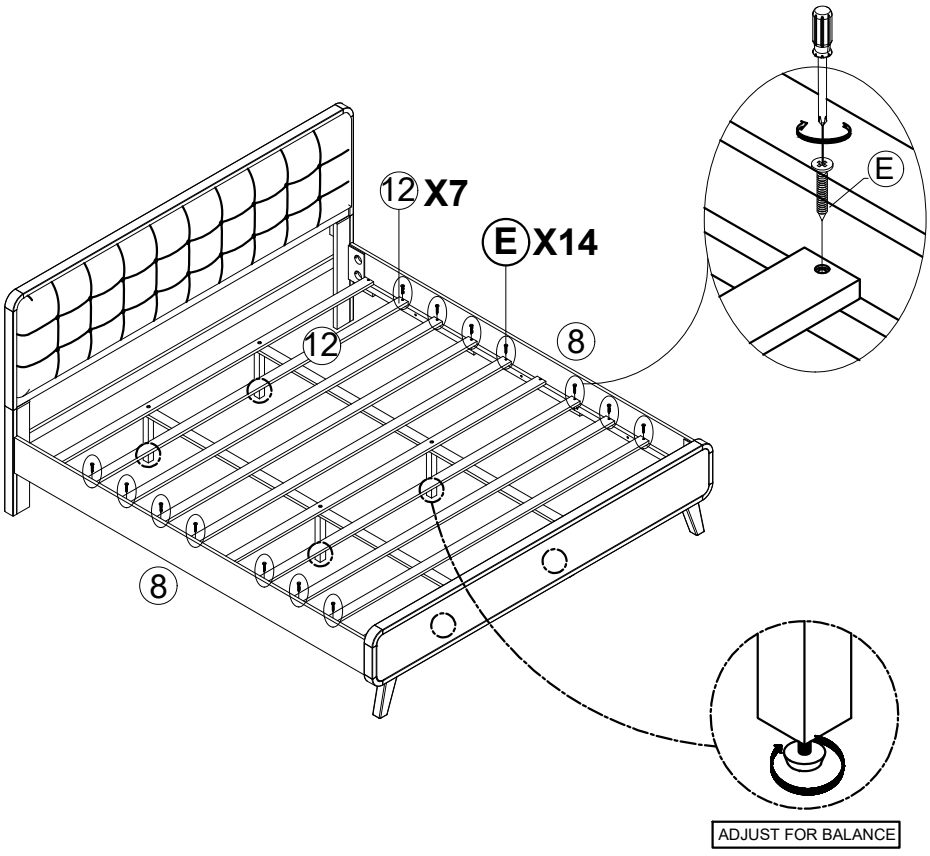

Attach 7 pcs Slats ⑫ to Side Rails ⑧ in the correct spacing using 14 pcs Wood screws Ⓔ to tighten them.

NOTE : that the middle leg can be adjusted to suit the position of your floor.

COMPLETED

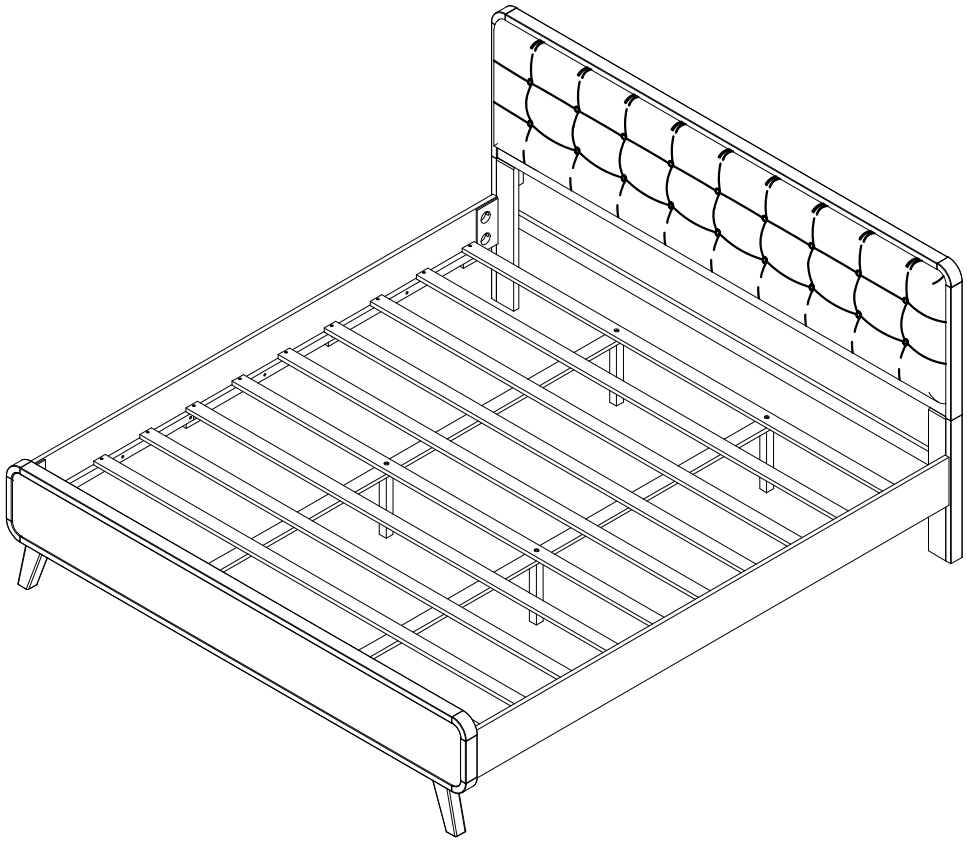

Inspect the Bed an make sure all parts are adequately connected.
Adjust the Levelers to desired height to avoid wobbles.
Your bed is ready for use.

CARE INTRUCTIONS:
Hardware may loosen overtime. Periodically check that all connections are tight.
Wipe with a soft , dry cloth . To protect finish , avoid the use of chemicals and household cleaners.