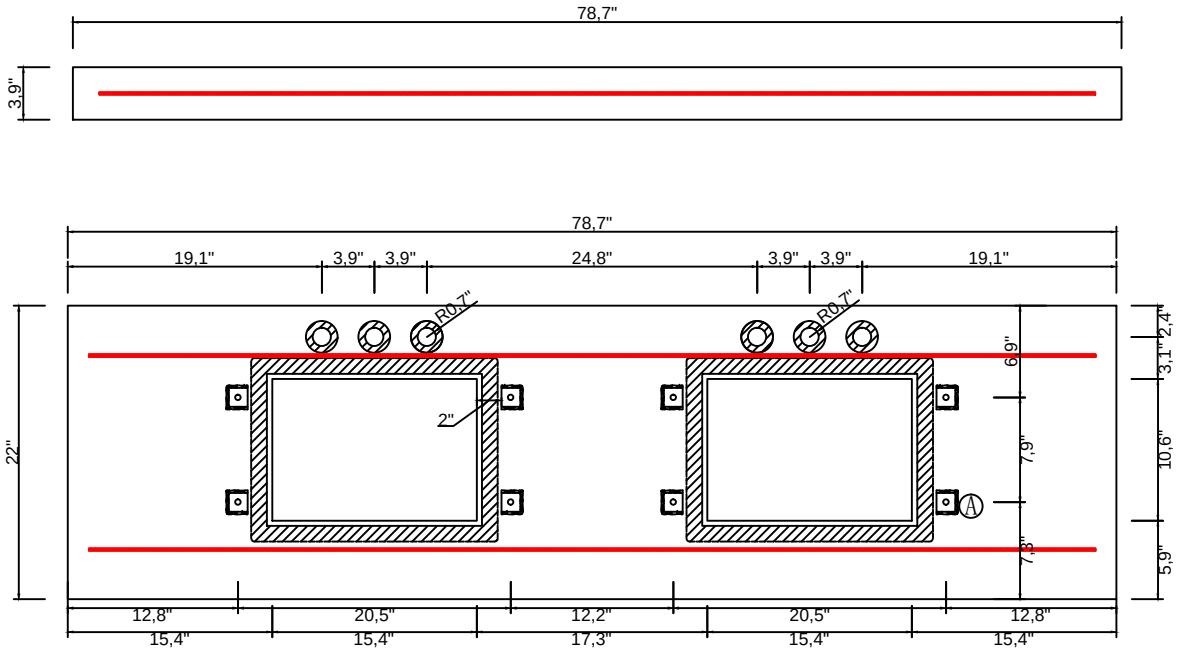
78,7"
3,9"
78,7"
19,1"
3,9"
3,9"
24,8"
3,9"
3,9"
19,1"
R0,7"
R0,7"
2"
22"
6,9"
7,9"
7,3"
2,4"
3,1"
10,6"
5,9"
A
12,8"
20,5"
12,2"
20,5"
12,8"
15,4"
15,4"
17,3"
15,4"
15,4"

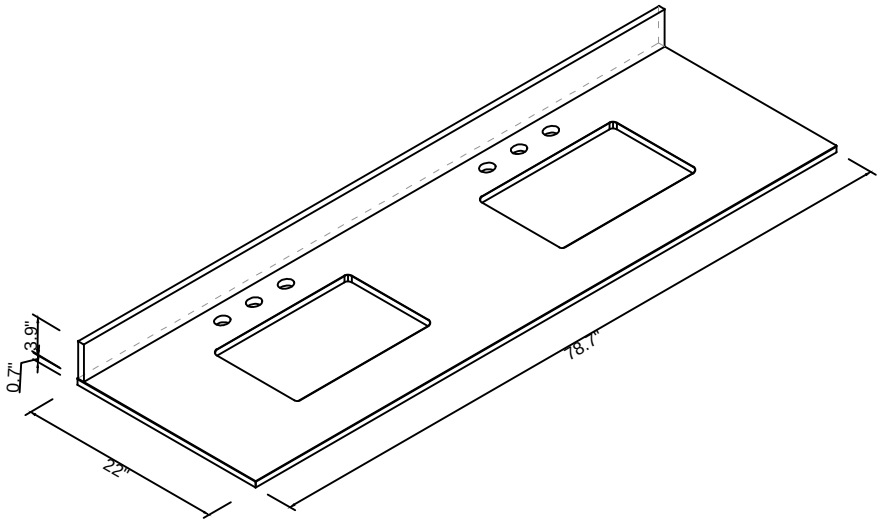
0,7"
3,9"
22"
78,7"

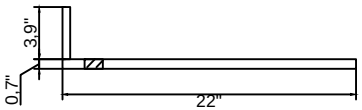
3,9"
0,7"
22"

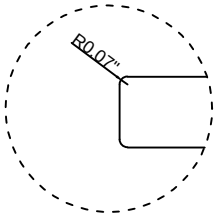
R0,07"

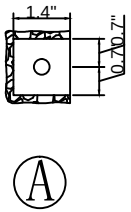
1,4"
0,7"
0,7"
A

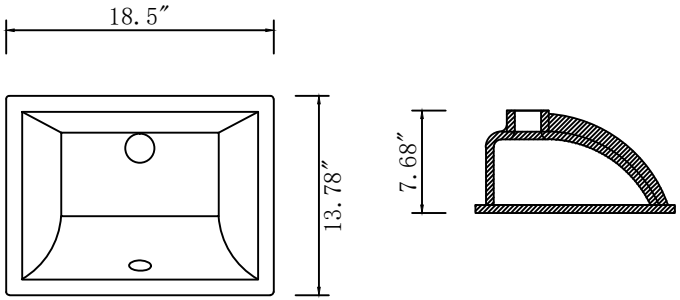
18.5″
13.78″
7.68″

GS-2-Bas-SQ