MODULAR SECTIONAL SOFA

- OTTOMAN MODULE

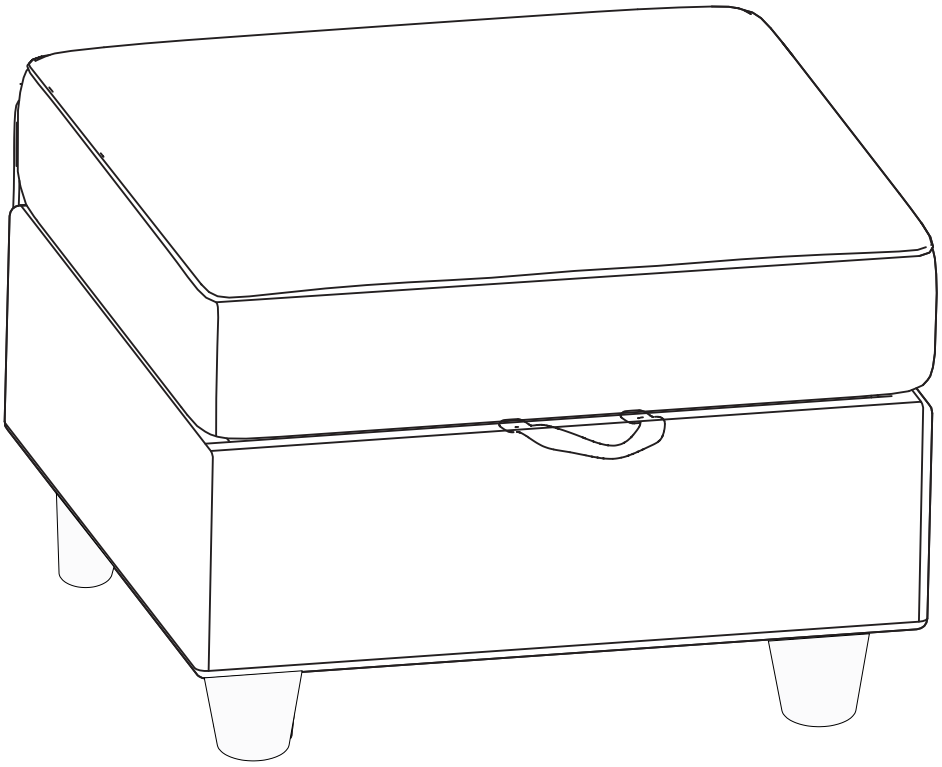

Trouble Shooting:

Missing / Wrong /Broken parts and installation issues

↓

Send email with your question,pic and order No. to our website.

↓

Respond within 24 hours

↓

Issue resolved

INTRODUCTION

Thank you for purchasing our products. Committed to providing customers with the best quality products and service has always been our lifelong goal. Before using the product, please read this instruction manual carefully to ensure correct use. Keep the instruction manual in a place where the user can find it at any time.

PRECAUTIONS

1. The package contains several components and accessories, each labeled with a letter or number. Before using any product, check labels carefully. To prevent accidents, keep children and animals away from the work area.
2. Make sure you have enough room to place the parts before you start, and assemble the product as close to its final location as possible.
3. To avoid scratching or damaging the surface of the product, install it on a clean, soft surface such as carpet or cardboard.
4. Note that the main parts of the product are relatively heavy. Pay great attention to safety during installation.
5. Avoid moving the product randomly during installation, otherwise it may be unstable. Wait for it to fully install before doing anything else.
6. It is recommended that two people work together for easier assembly.
7. If you have any questions during the installation process, please contact customer service for help in time.

***PLEASE BE SURE TO FOLLOW THE INSTALLATION STEPS IN THE MANUAL TO AVOID UNNECSSARY LOSSES CAUSED BY IMPROPER INSTALLATION.**
***IF YOU NEED FUTHER ASSIATANCE, PLEASE CONTACT THE CUSTOMER SERVICE ONLINE.**

CARE ADVICE

1. Use a damp cloth or mild detergent for cleaning. Avoid bleach or abrasive cleaners.
2. Promptly clean spills to prevent stains or damage.
3. Avoid using acetone, ammonia, or sodium hydroxide-based products. These chemicals can harm the surface or cause discoloration.
4. Avoid placing furniture in front of heat sources.
5. Use mats to protect surfaces from moisture and heat.
6. Regularly check for loose screws and tighten them promptly.

C BOX

*Please check if all the pieces listed below are received

5 Seat 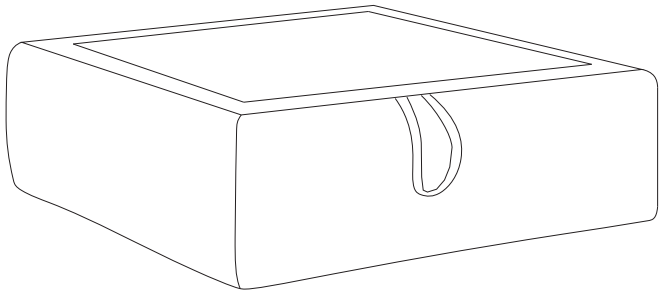 x1	**C** 50*70*80mm 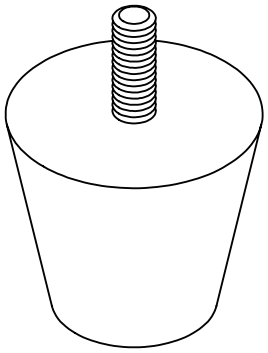 x4
6 Seat Cushion (It is located in the seat) 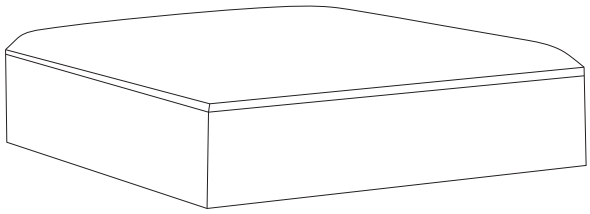 x1	**G** 30*65mm 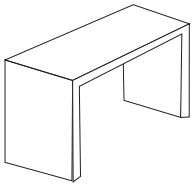 x2

1

YOU WILL NEED	
C x4	

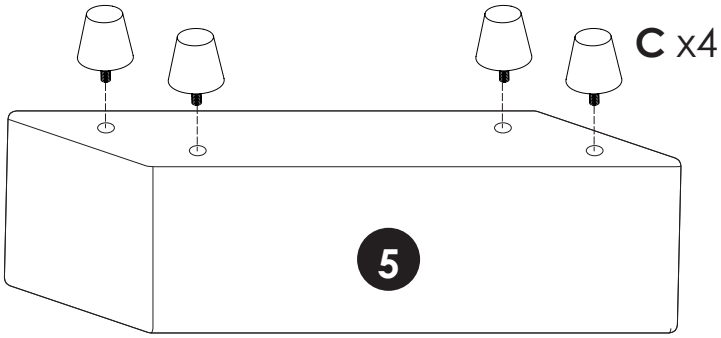

2

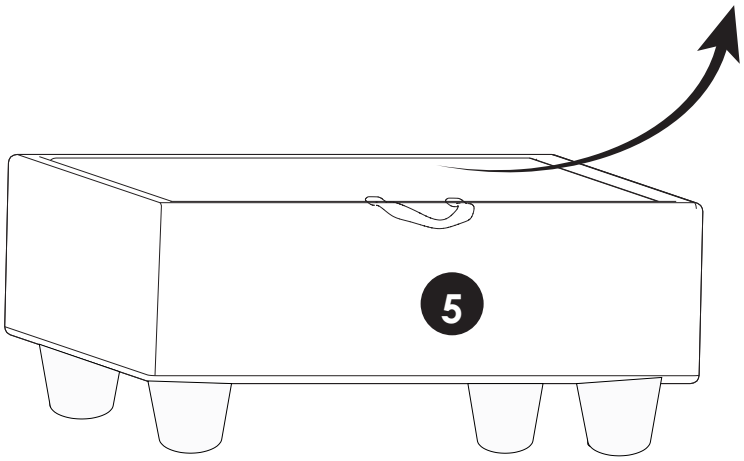

3

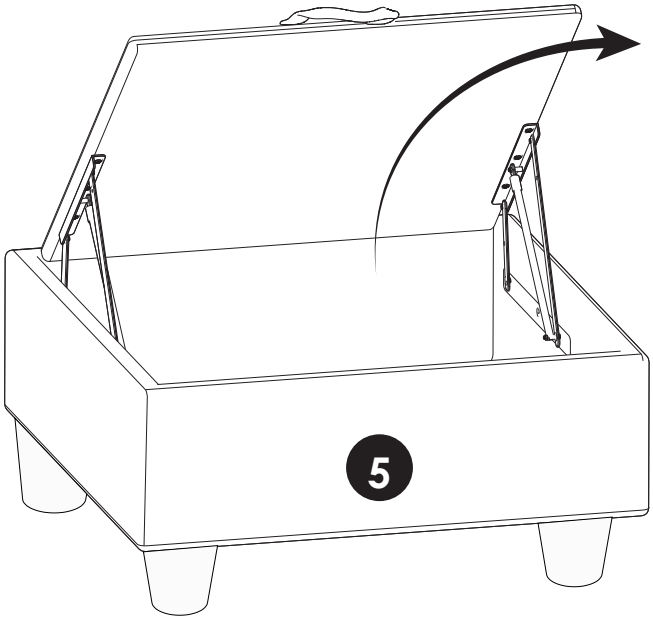

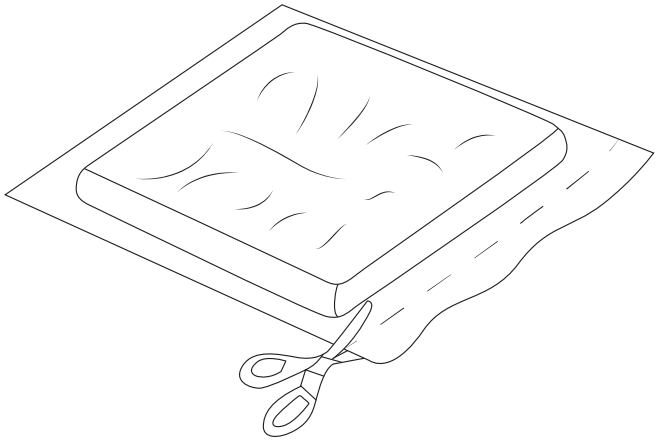

Please allow 3 hours for the cushion to regain its full shape.

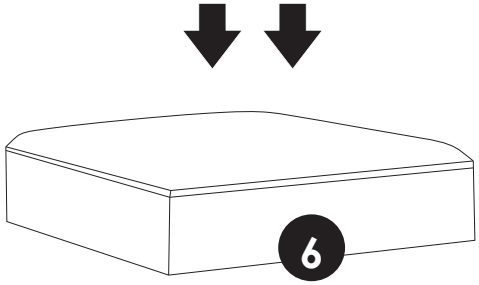

4

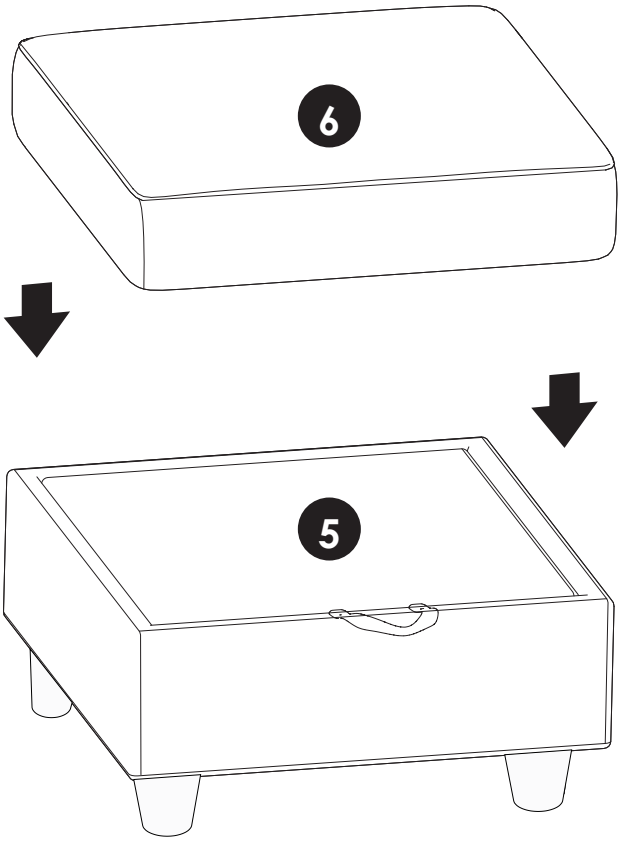

5

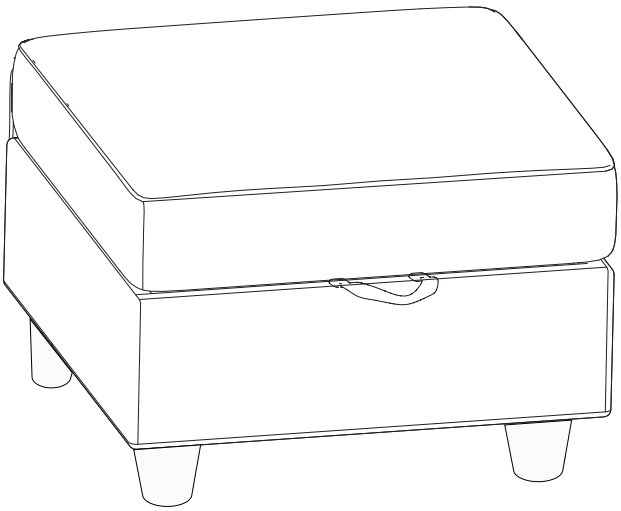

CHANGE YOUR SOFAS AS NEEDED

Armrest A1 as example

A1

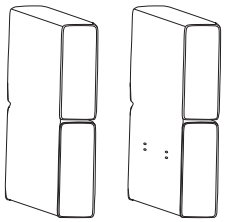

B

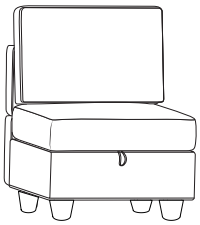

C

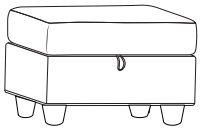

A x1 B x4 C x1

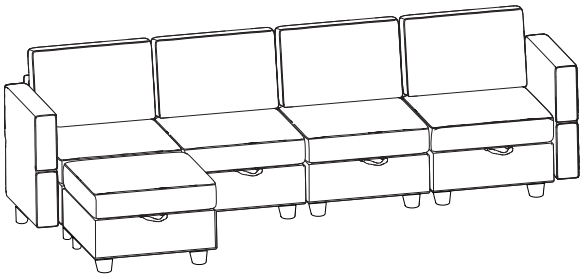

A x1 B x4 C x2

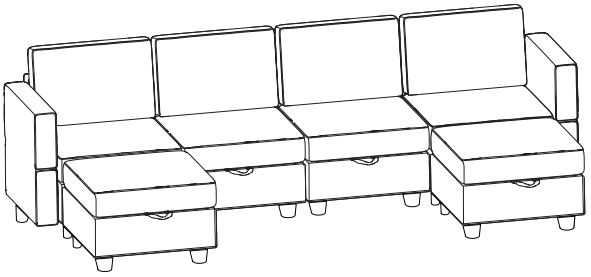

A x1 B x4 C x3

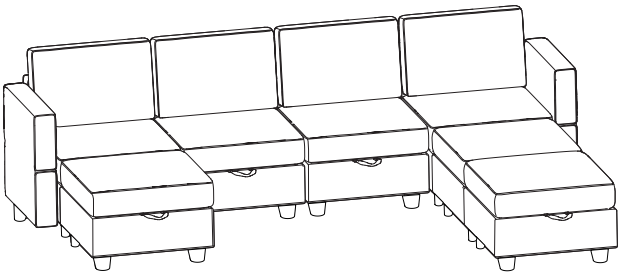

A x1 B x6

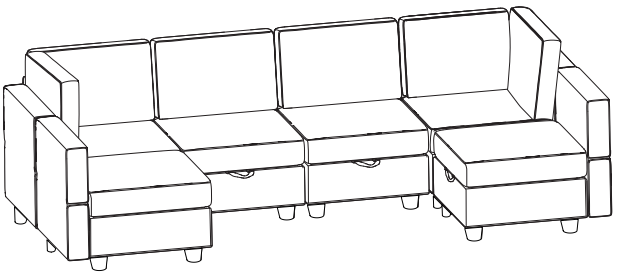

A x1 B x7 C x2

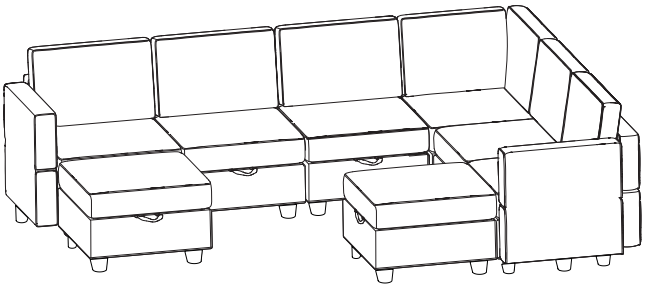

IMPORTANT SAFETY INFORMATION

Please carefully read the instructions and caution warnings below before assembling the product. Following this guide will ensure that you install, use and maintain the product properly.

- Please keep this installation and user manual/instructions for future reference in case you need to assemble the product
- Do no assemble if you notice serious damage such as cracks or bends.
- During installation, please use work gloves for hand safety.
- Please assemble the unit on carpeted floor or the flat cardboard box to avoid scratching the surface or your floor while assembling on the floor.
- To assemble,please use the complimentary installation tools(Allen Wrench).Pay more attention to the direction of components at each steps.
- It is recommended that two people work together to assemble the product.
- Please do not tighten the screws up too much, just to 80% before you finish to make the installation go on successfully.

RETURN POLICY

We believe you will absolutely love your new product.But for some reason you want to return your item,please contact us within 30 days after receiving and ensure that the product which you want to return is in a good condition in the original box with all original certificates of purchase, manuals and accessories attached.

HOW TO MAINTAIN YOUR PRODUCT:

- Check the screws of the product are not loose from regular use.
- Do not use sharp instruments,rubbing alcohol,corrosive chemicals, or abrasive cleaners to clean the product.
- Do not keep the product in a damp environment for a long period of time.The damp environment may cause the iron components to rust and the plates to bulge and crack.