ASSEMBLY INSTRUCTION

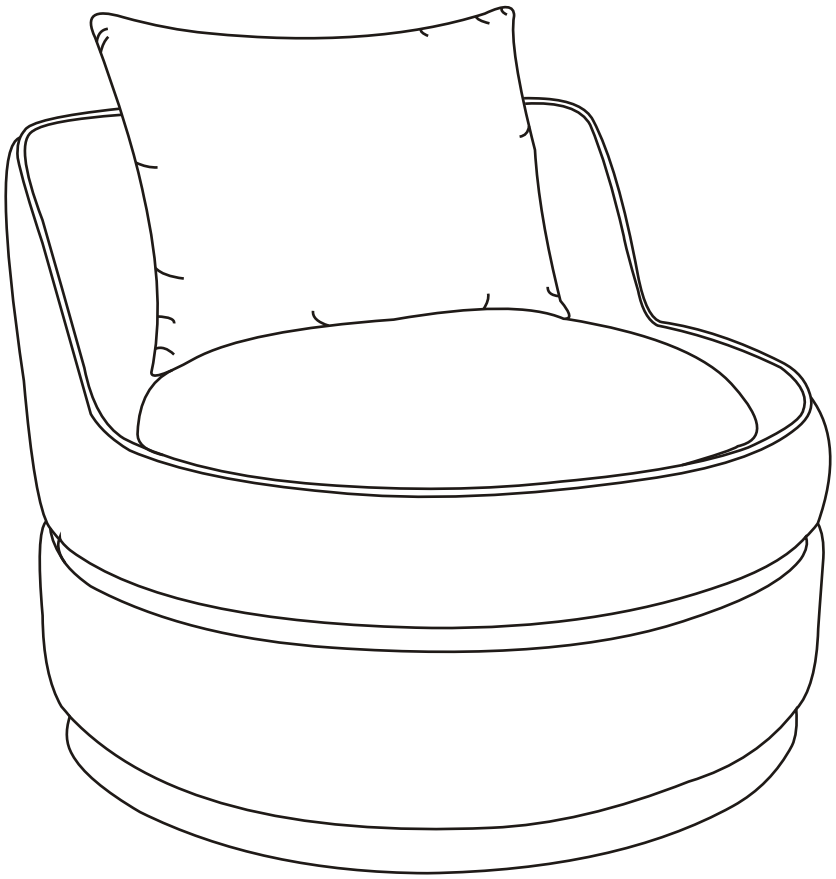

Attention!

Before assembly, pls check all parts list and make sure no missing!

Parts list

A x1 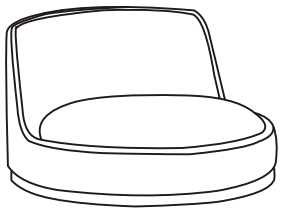 Backrest	B x1 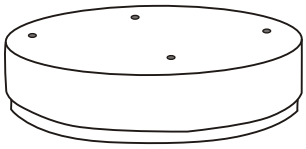 Base	C x1 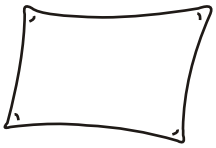 Back cushion	D x1  6mm Allen wrench	E x4  Screw M6x45mm F x4  Washer M6x30

Step 1: **Align** the holes of the backrest (part **A**) and the base (part **B**) as instruction in this direction,

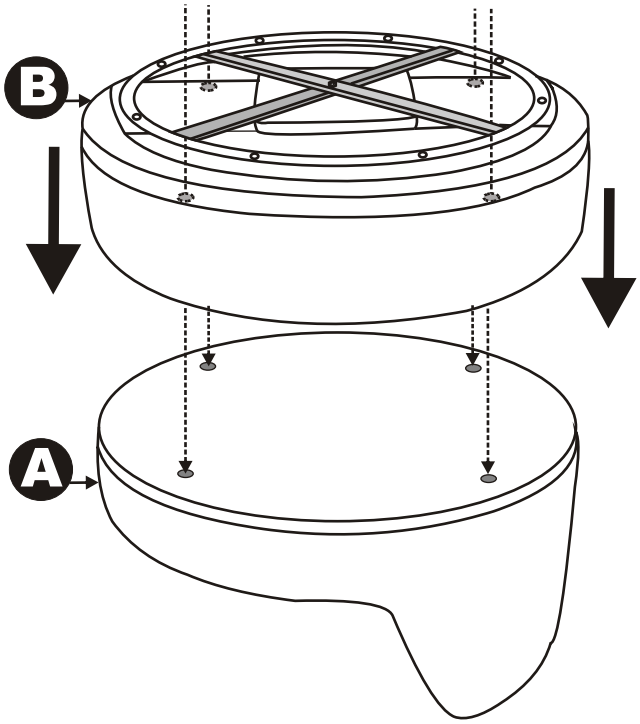

Step 2: And use Allen wrench (**D**) to connect with screws (part **E**) & flat washers(part **F**). But please don`t tighten screws into 100%, 50% is ok for now.

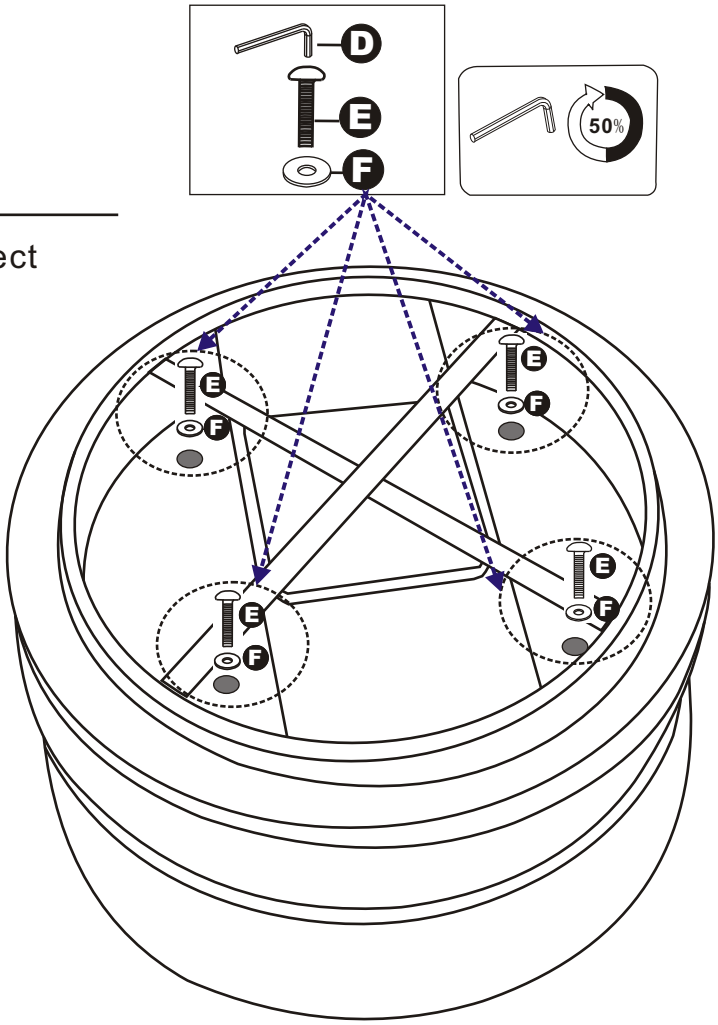

Step 3: Then tighten all screws into 100%.
Put the back cushuion (part **C**) onto the backrest (part **A**).

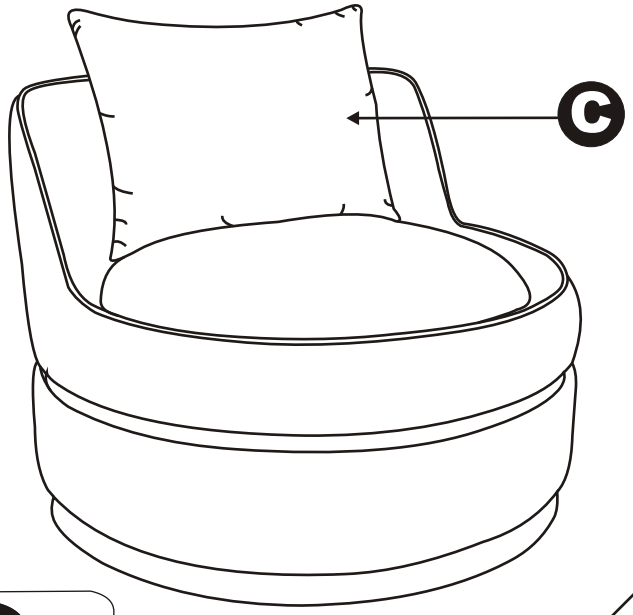

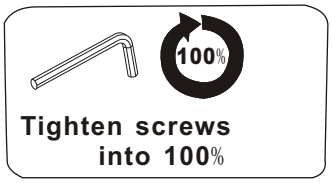

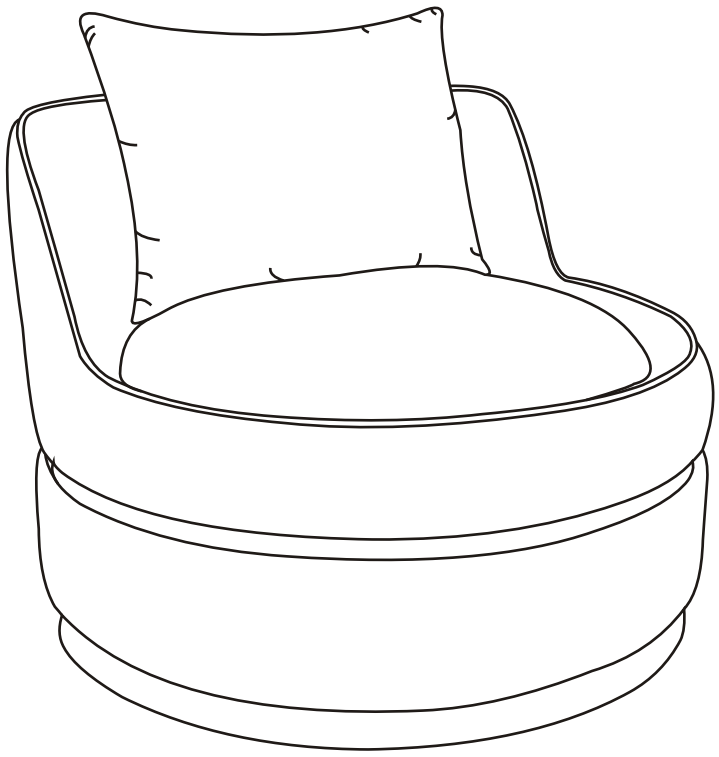

Finished !