GARDEN SHED
Installation Manual

Please make sure you have received all the packages before installing and choose the installation mannual according to the storage sheds you ordered

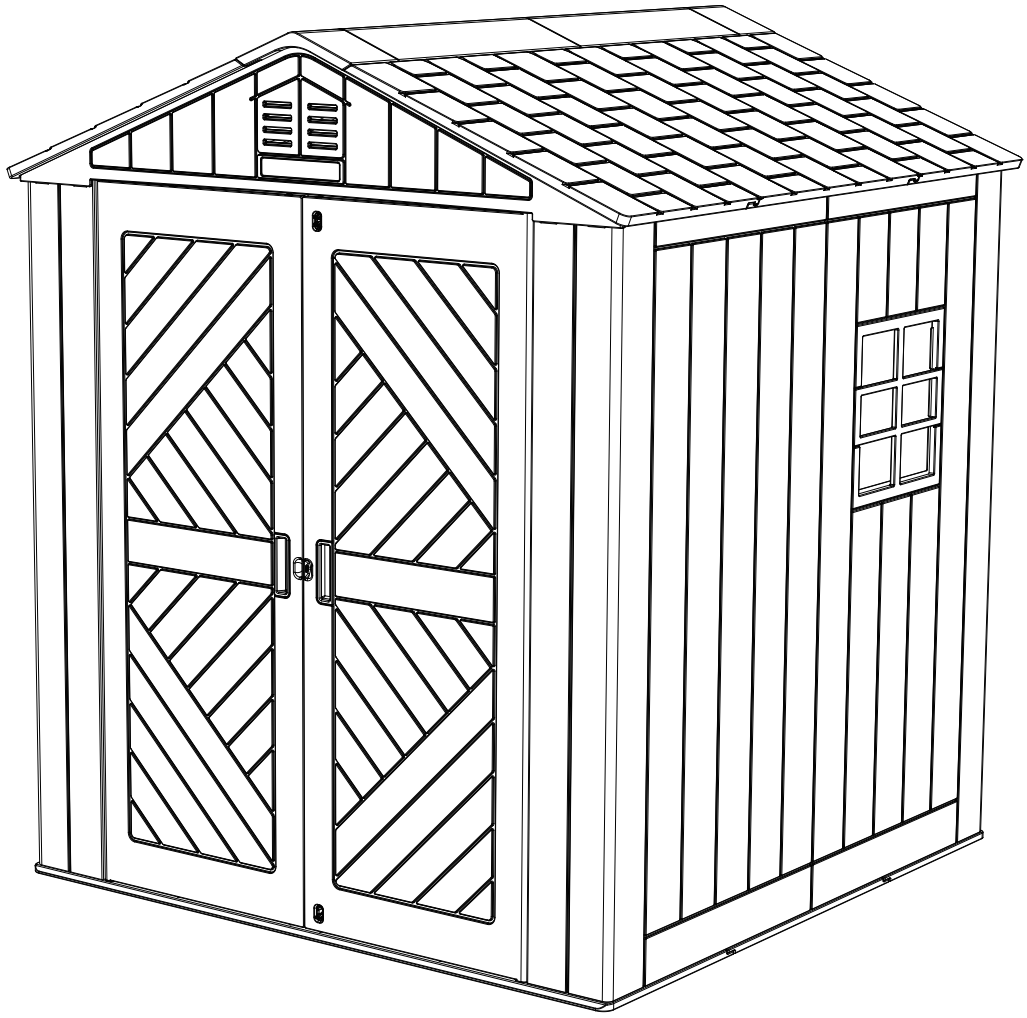

3Boxes（Box A，Box B，Box C）

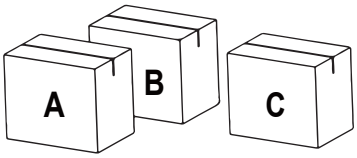

Warnings

Care must be taken when handling various pieces of your building since many contain sharp edges.Some parts may have sharp edges. It is advisable to wear gloves when handling these items and safety glasses if drilling holes.

Sensible shoes are highly recommended.

Do NOT attempt to assemble your building before double-checking that you have all the parts indicated.

in the parts lists. Any building left partially assembled may be seriously damaged by even light winds.

Do NOT attempt to assemble your building on a windy day. The large panels can catch the wind like a “sail”, making construction difficult and unsafe.

Keep children and pets away from the worksite during construction and until the building is completely assembled. This will help avoid distractions and any accidents which may occur.

NEVER concentrate your weight on the roof of the building.

Before assembling any parts, your base should be constructed and an anchoring system should be ready to use.

The best location is a level area with good drainage.

Allow enough space outside the building to be able to access the roof with a ladder.

Use Teamwork: Two or more people are required to assemble your building.

BEFORE BEGINNING ASSEMBLY

Keep the hardware bags and their contents separate. If any parts are missing, call our Customer Service Department.

Read the "Congratulations" letter on page 2-3. Identify and inventory all parts and hardware using the parts and hardware lists and identifiers in this document.

Two adults required to complete assembly

(+ one adult suggested as an instruction reader)

Only adults should set up the product. Do not allow children in the set-up area until assembly is complete.

TOOLS REQUIRED



power drill



screw bits



adjustable spanner



weeding machine



hammer



gloves



phillips screwdriver



ladder



leveling board



rake



safety glasses (one for each person)

IMPORTANT NOTICES

Level Surface Notice:

Surface must be leveled before installation. We recommend building a level work space with a concrete or patio style surface. If the surface is not properly leveled, the Outdoor Shed will not assemble correctly. Proper surface leveling will save you time in the long run, so please do not ignore this step.

Building Code Notice:

Consult all local building codes, as well as city and county or dinances, to ensure that the construction of the Outdoor Shed does not require a building permit. Proper building permit documentation may be required in your neighborhood, and it would be unfortunate to learn this after constructing the Shed.

Screwdriver Notice:

You may use a #2 Phillips head screwdriver bit and apower screwdriver ordrill,instead of a hand screwdrive r. Howeve r, be aware that the plastic pieces of your Shed can be damaged by overtightening of screws. To avoid damage we strongly recommend the use of a low-powered power screwdriver or a drill that has an adjustable clutch that is set on a low torque setting. If neither is available, use a hand screwdriver. In any case use caution to avoid overtightening the screws.

Floor Puncture Notice:

Sharp objects may damage your floor. If resting sharp, heavy objects on your Shed floor , place a block of wood between the sharp object and floor.

⚠ CAUTION:

If more than six (6) inches of snow accumulate on the roof of the shed, carefully remove the snow to avoid possible roof collapse. While standing on the ground, remove the snow from the roof with a broom or snow shovel. Do not stand on the roof to remove snow.

For outdoor installation, a flat site is required.

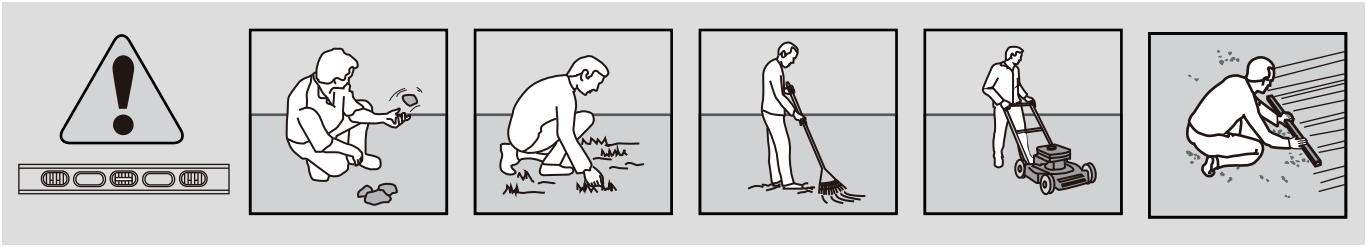

Level the ground surface before unpacking parts and beginning.

A Carton Part Lists

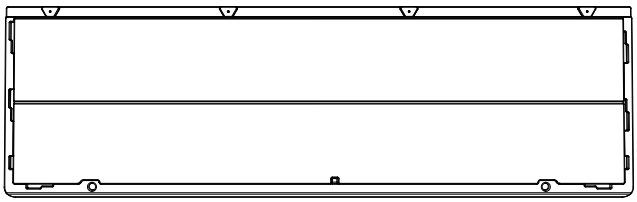

A-1

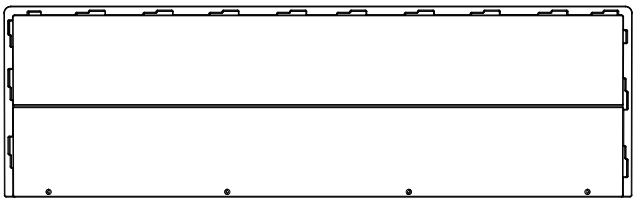

A-3

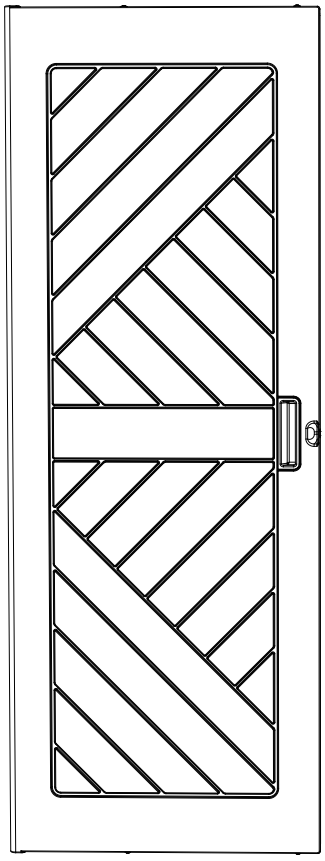

D-L

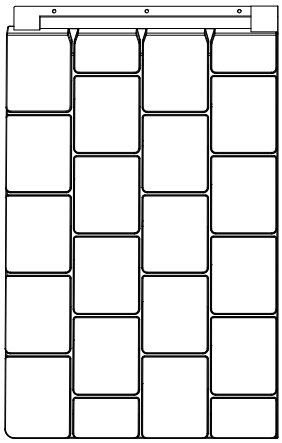

G-1
2pcs

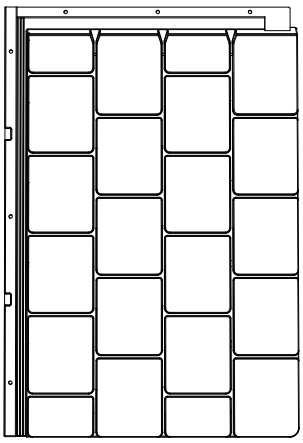

G-2
2pcs

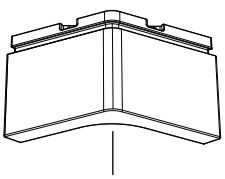

H-1

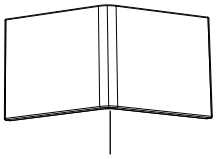

H-3

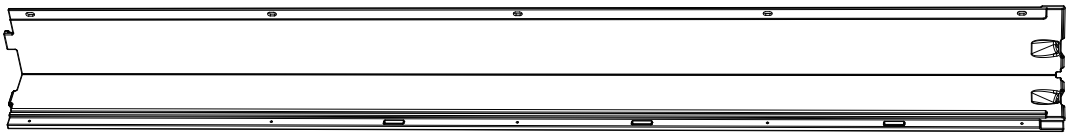

B-1
2pcs

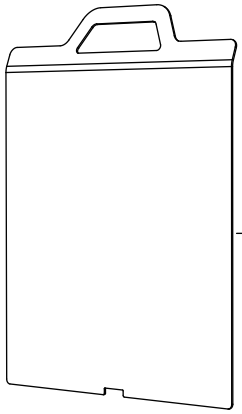

P

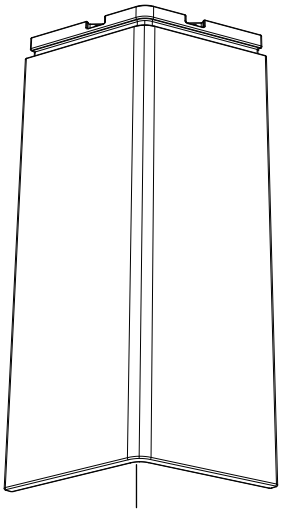

H-2



J-6
6pcs

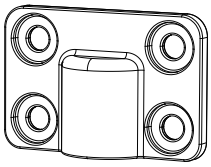

M
2pcs

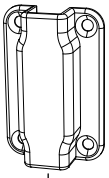

L2
2pcs

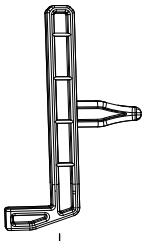

L3
2pcs



E-3

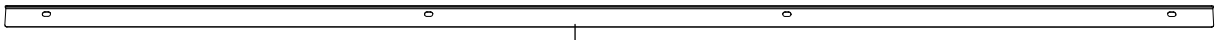

E-2

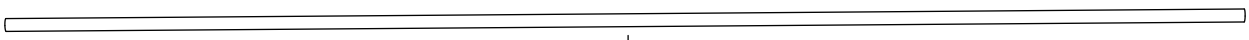

J-1
2pcs



E-1



E-4

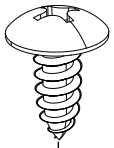

S1
120pcs
Spare 3pcs

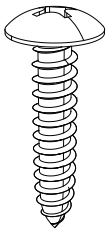

S2
10pcs
Spare 4pcs

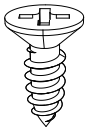

S3
10pcs
Spare 2pcs

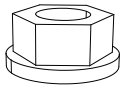

N1
3pcs
Spare 1pc

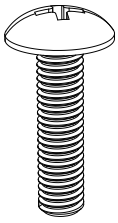

S4
3pcs
Spare 1pc

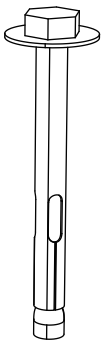

S6
5pcs
Spare 1pc



K-1
4pcs

B Carton Part Lists

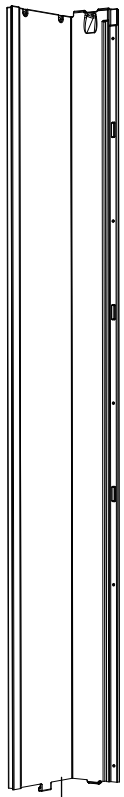

B-L

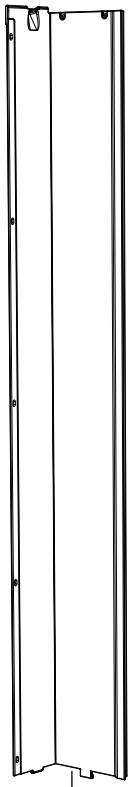

B-R

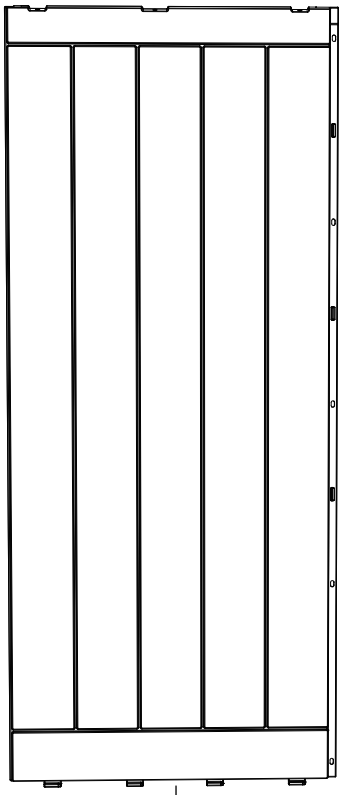

C-1

3pcs

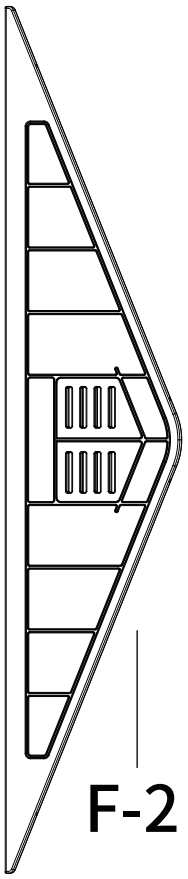

F-2

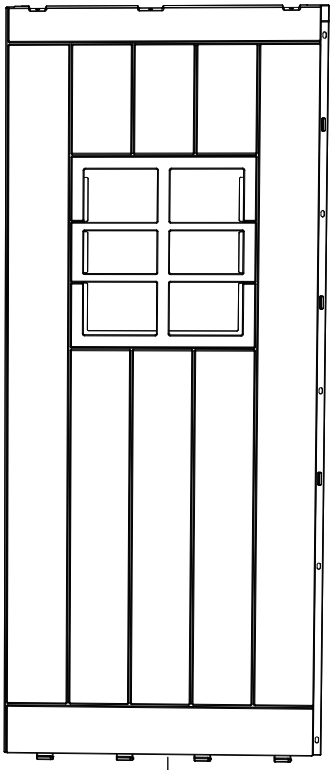

C-2

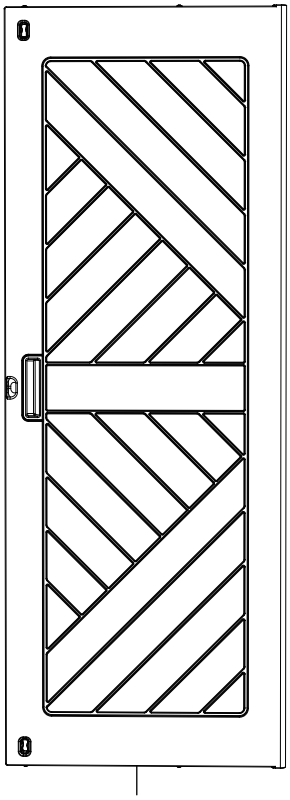

D-R

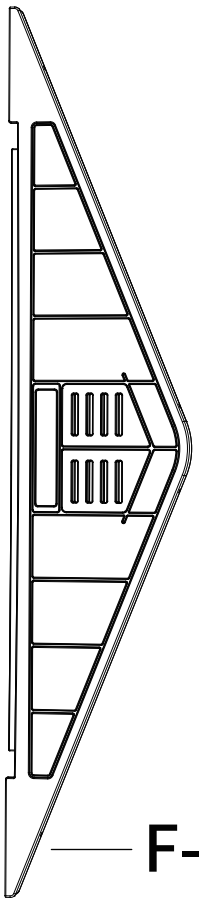

F-1

C Carton Part Lists

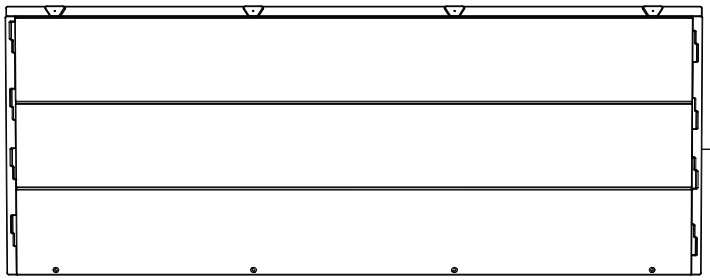

A-2

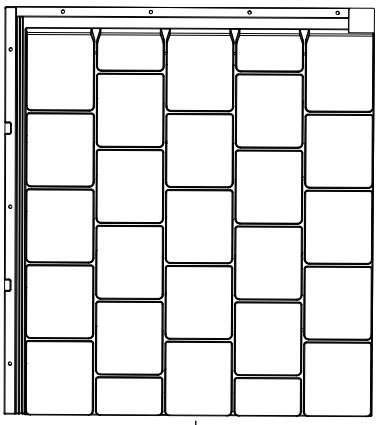

G-3
2pcs

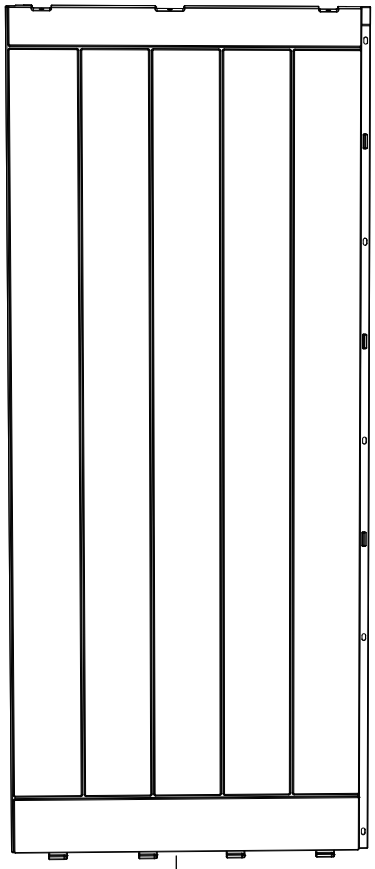

C-1

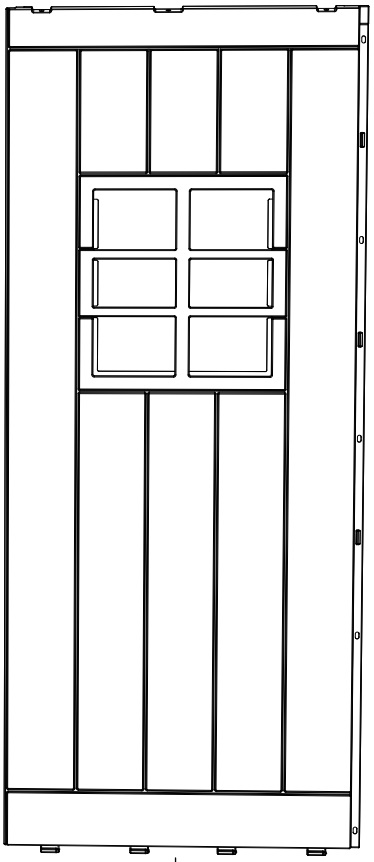

C-2

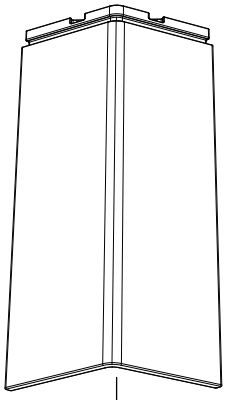

H-2

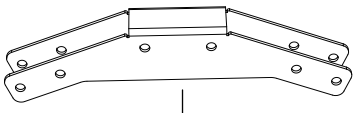

J-5



J-4

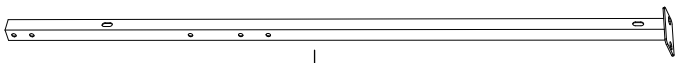

J-3
2pcs



E-1
2pcs

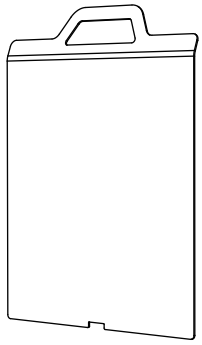

P

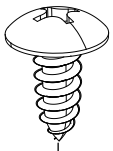

S1
45pcs
Spare 5pcs

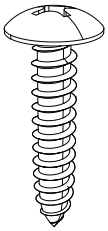

S2
12pcs
Spare 2pcs

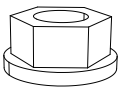

N1
17pcs
Spare 3pcs

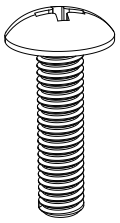

S4
3pcs
Spare 1pc

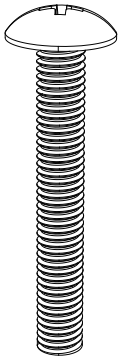

S5
14pcs
Spare 2pcs

1 Floor installation

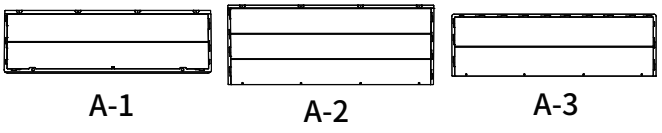


S1
8pcs

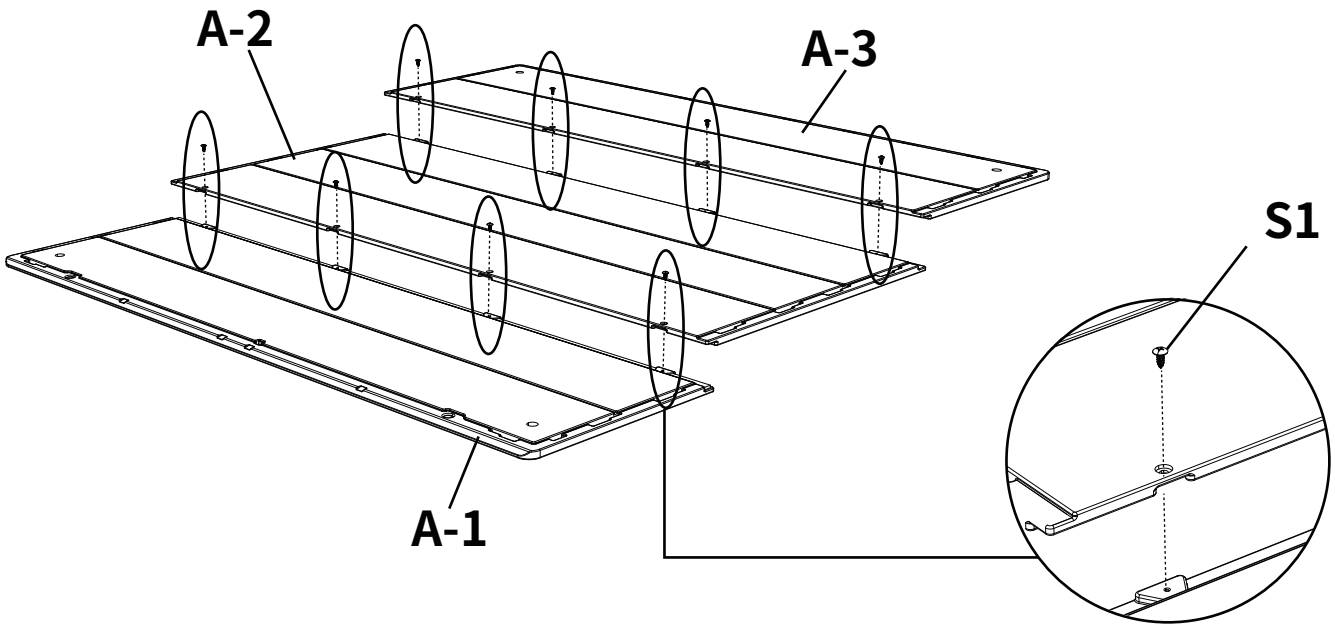

2 Installation of the left front pillar


B-L

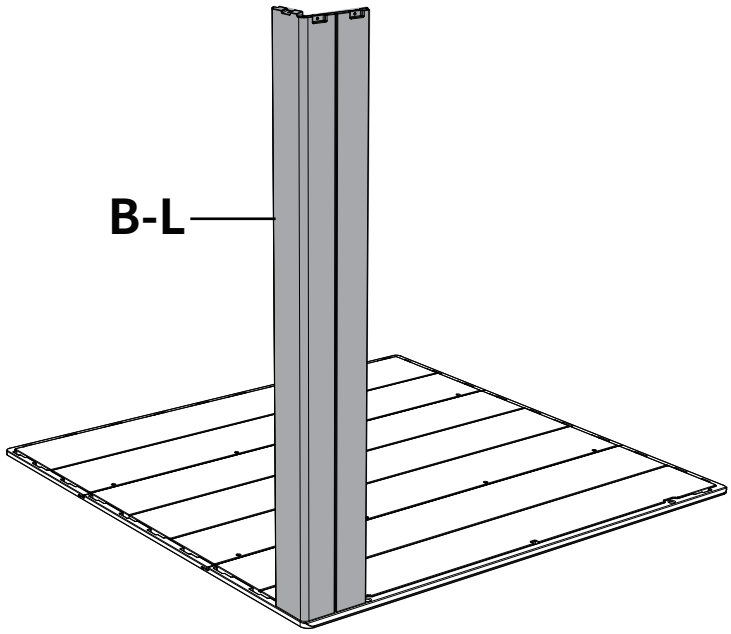

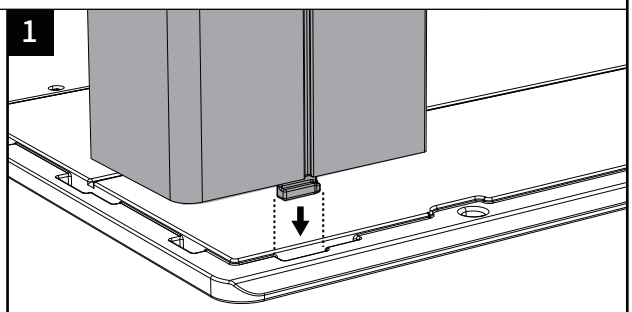

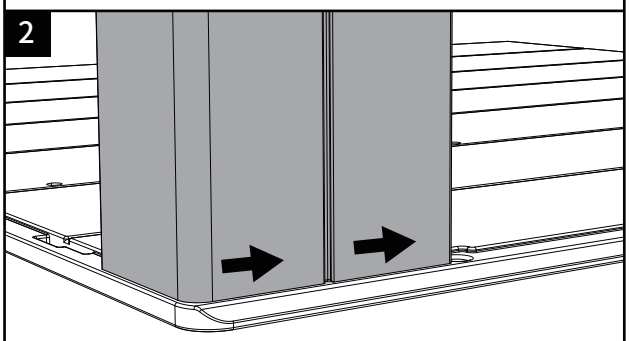

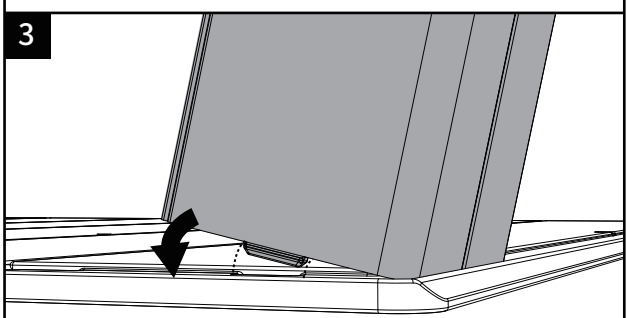

Note: Installation must start from the left front column (B-L) and proceed in a clockwise direction.

3 Wall panel installation

S1
5pcs

C-2

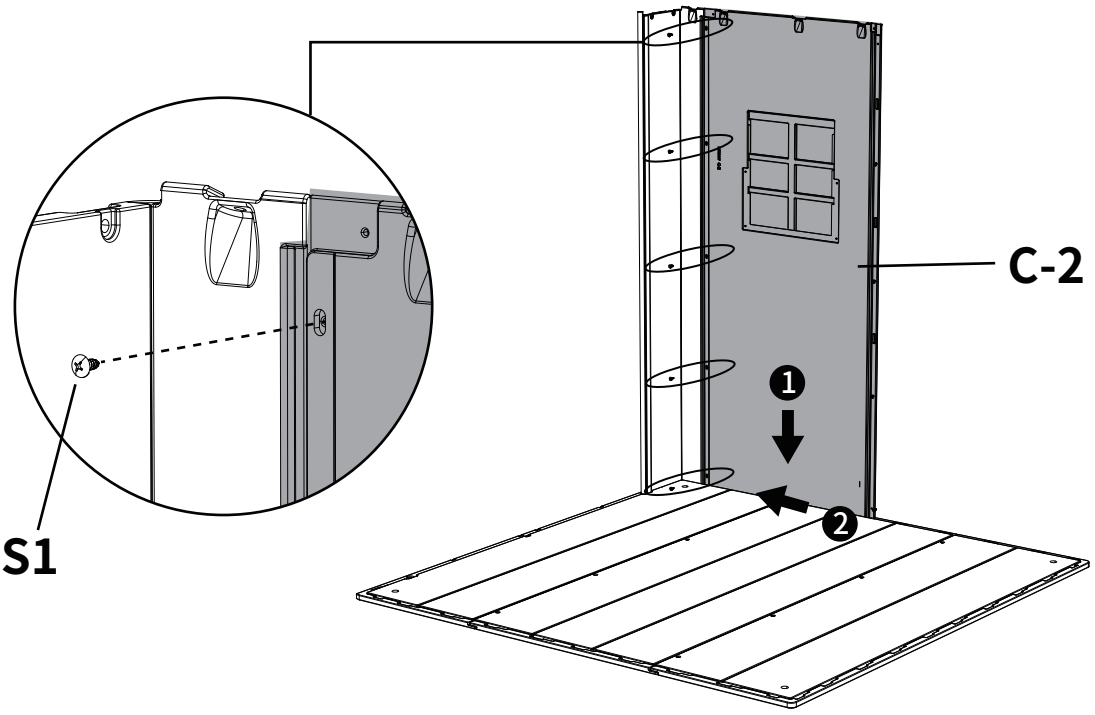

4 Wall panel installation

S1
40pcs

E-1
3pcs

C-2

C-1
4pcs

B-1
2pcs

B-R

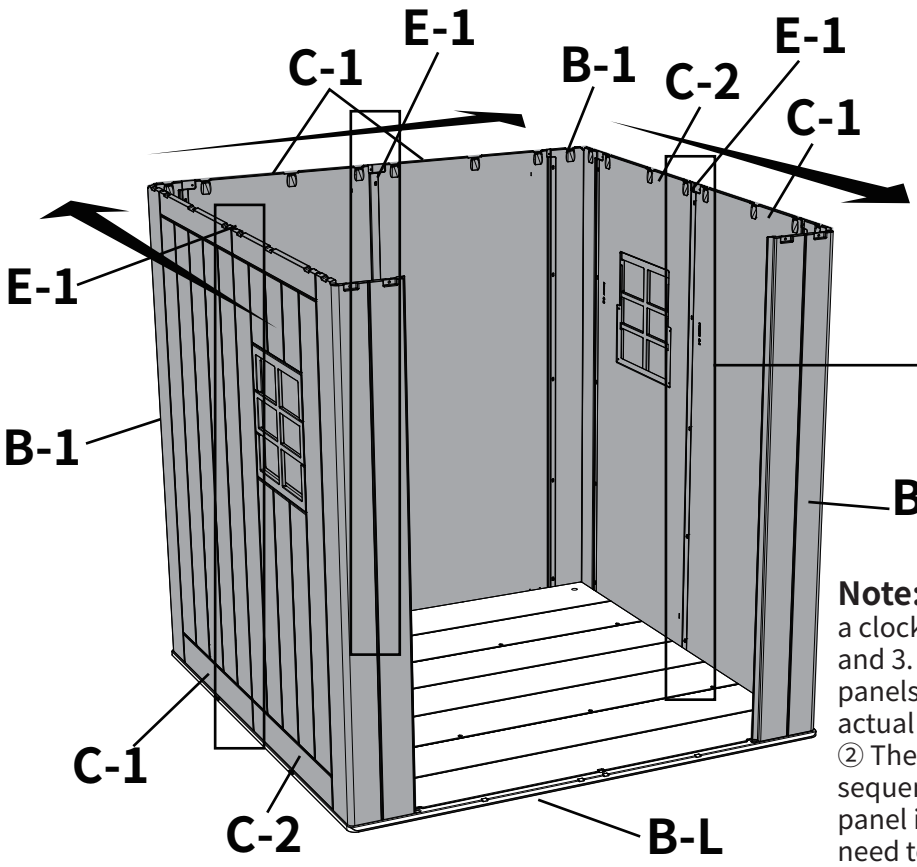

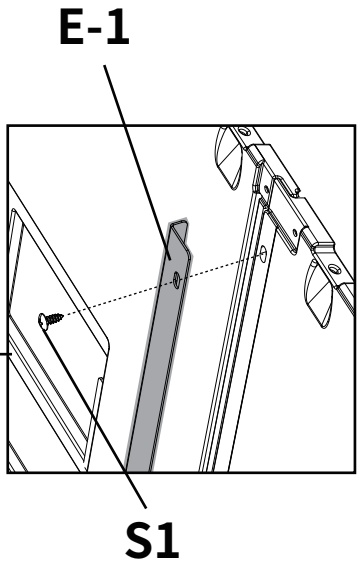

Note: ① Install the remaining wall panels in a clockwise direction according to steps 2 and 3. Wall panels (C-1) and window wall panels (C-2) can be installed as per the actual situation.
② The wall panels should be installed in sequence according to step 3. For each wall panel installed, the corresponding screws need to be installed.
③ The window wall panels can be installed in different positions as required.

5 Installation of triangular plates


F-1


F-2

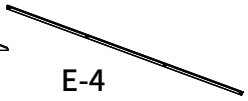
E-4


S1
16pcs

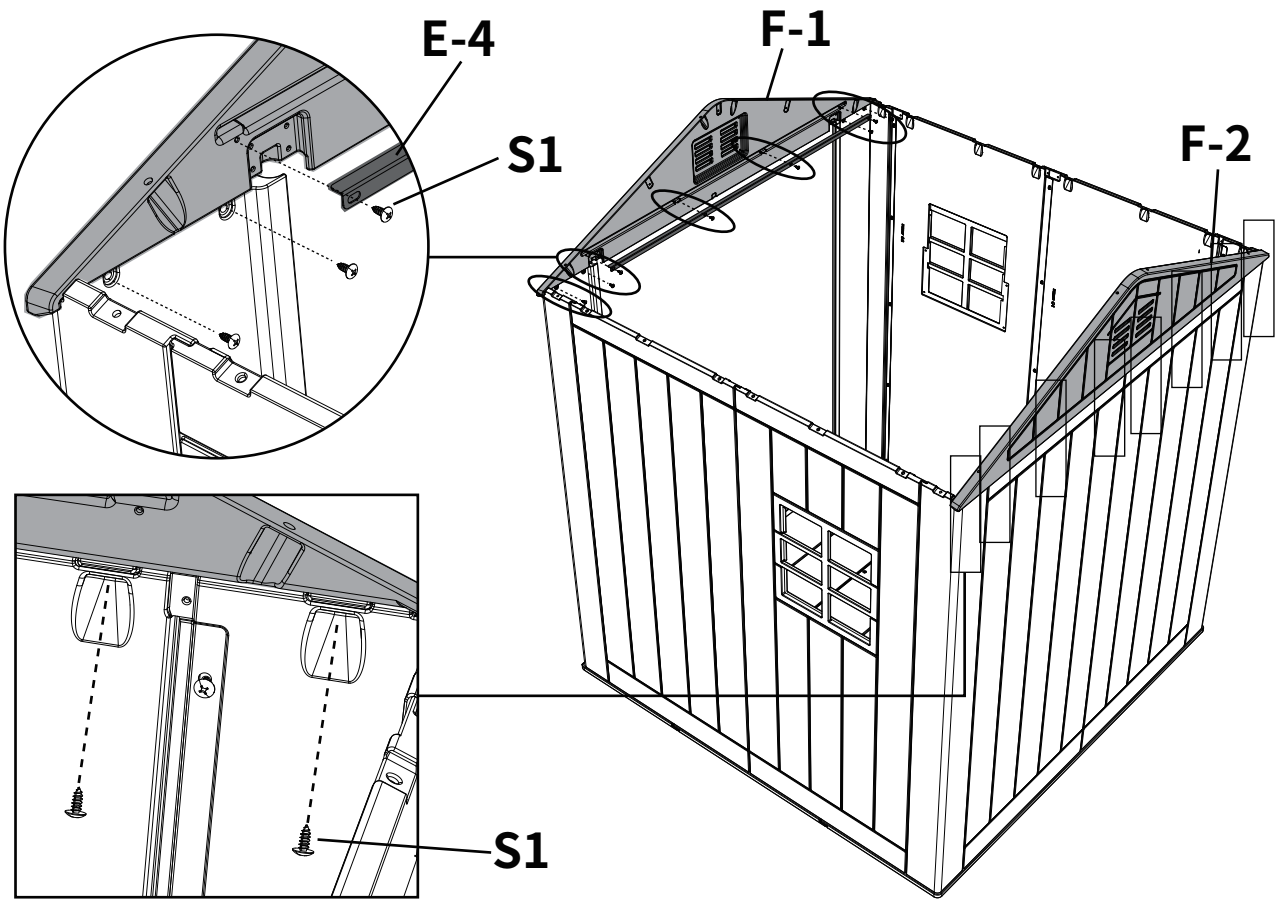

6 Assembly of support beams


N1
6pcs


S5
6pcs

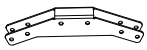
J-5

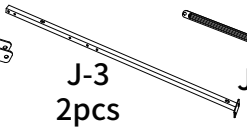
J-3
2pcs


J-4

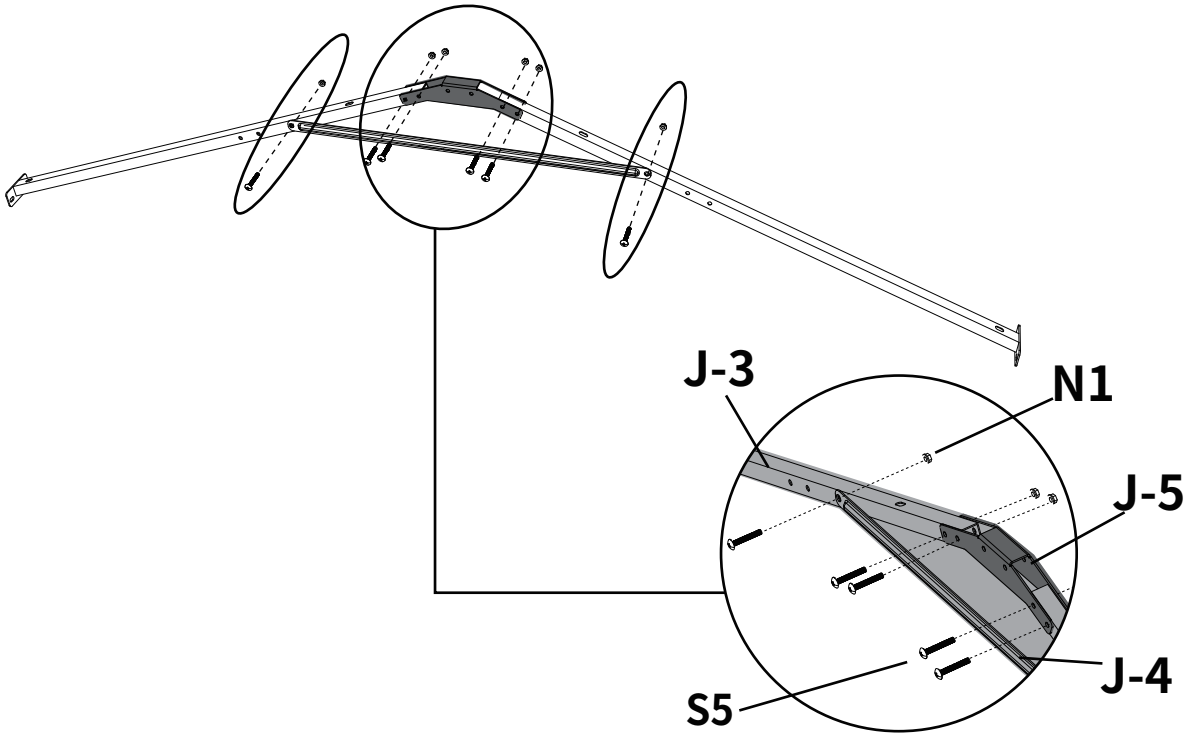

7 Installation of support beams

S1
4pcs

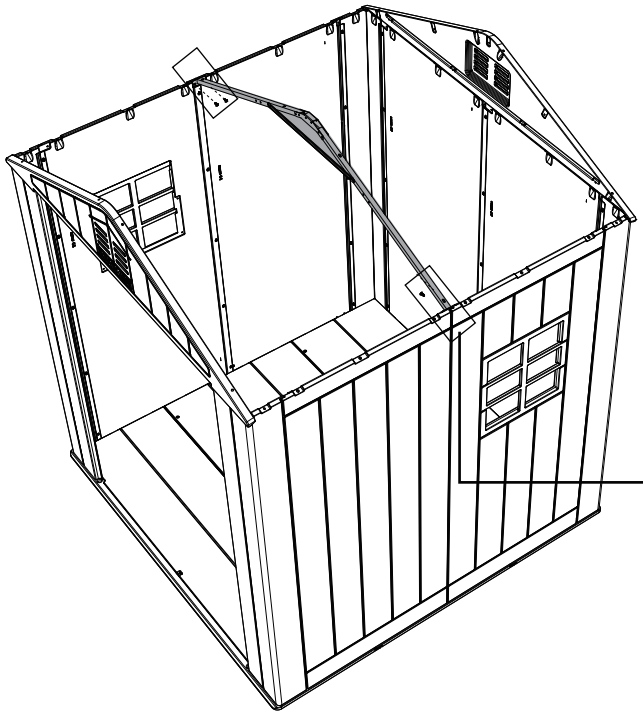

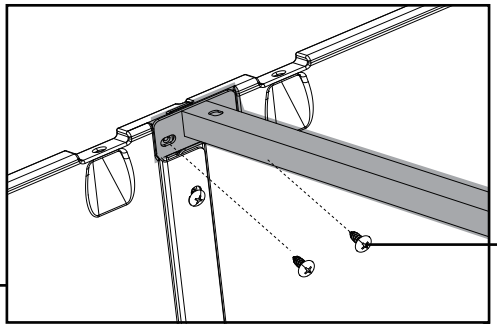

8 Installation of support beams

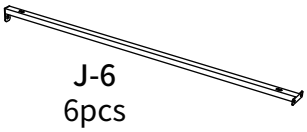

J-6
6pcs



S1
6pcs



N1
6pcs



S5
6pcs

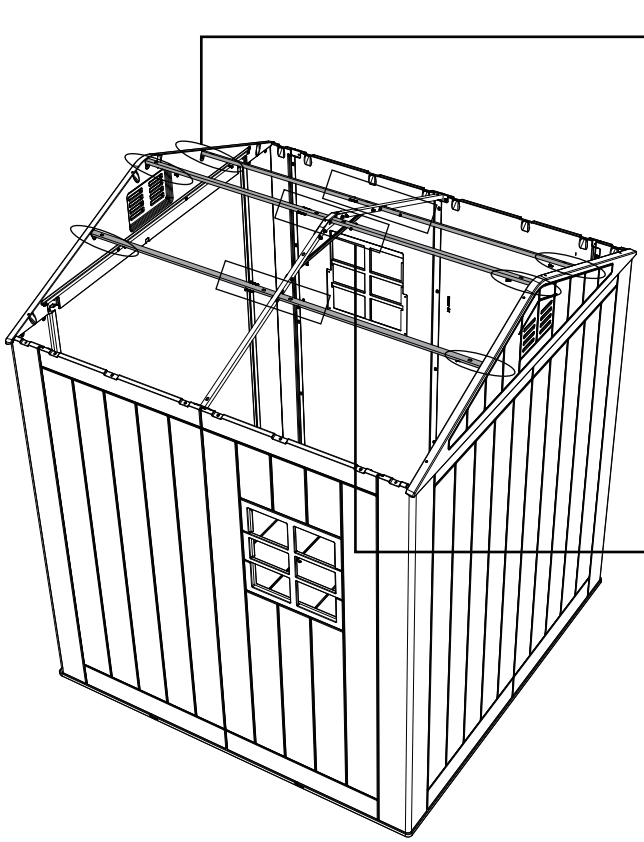

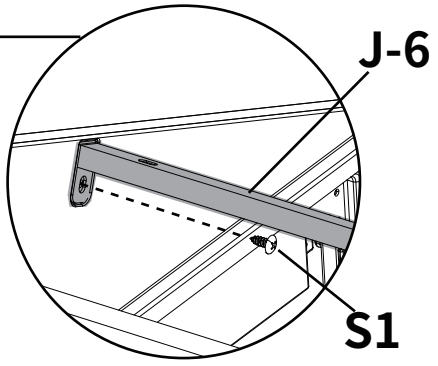

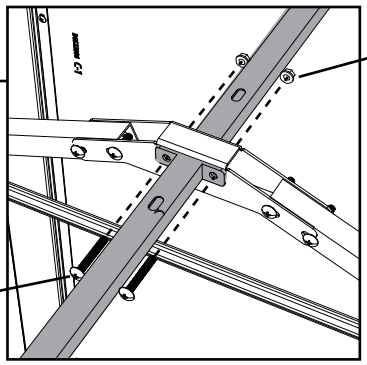

9 Installation of tiles

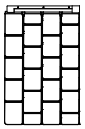
G-1
2pcs

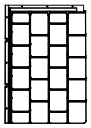
G-2
2pcs

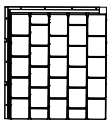
G-3
2pcs


S1
32pcs


S4
4pcs


N1
4pcs

Note: The final step is to install the bolts (S4) and nuts (N1).

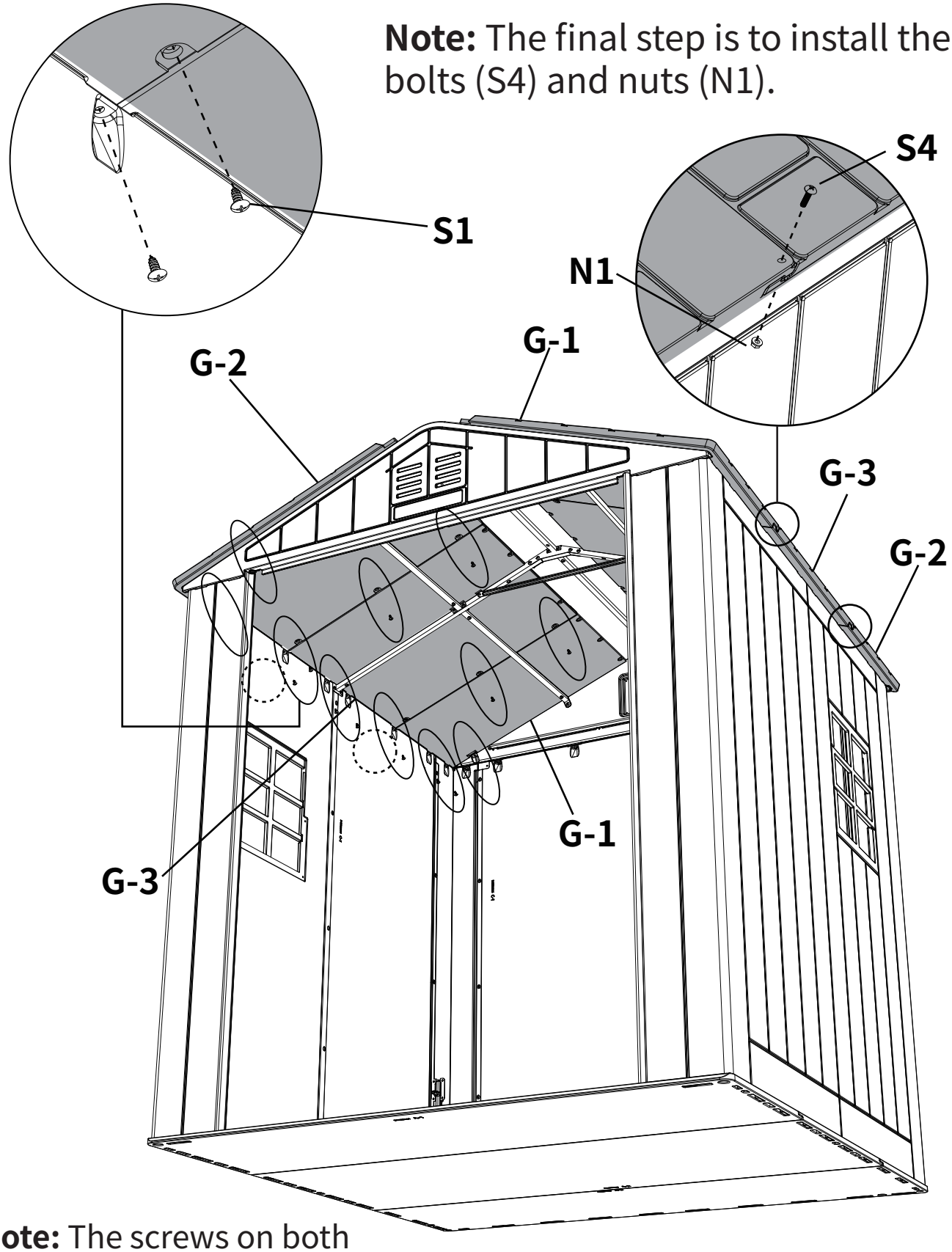

Note: The screws on both sides should be installed uniformly.

10 Installation of tiles

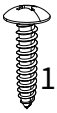

S2
12pcs

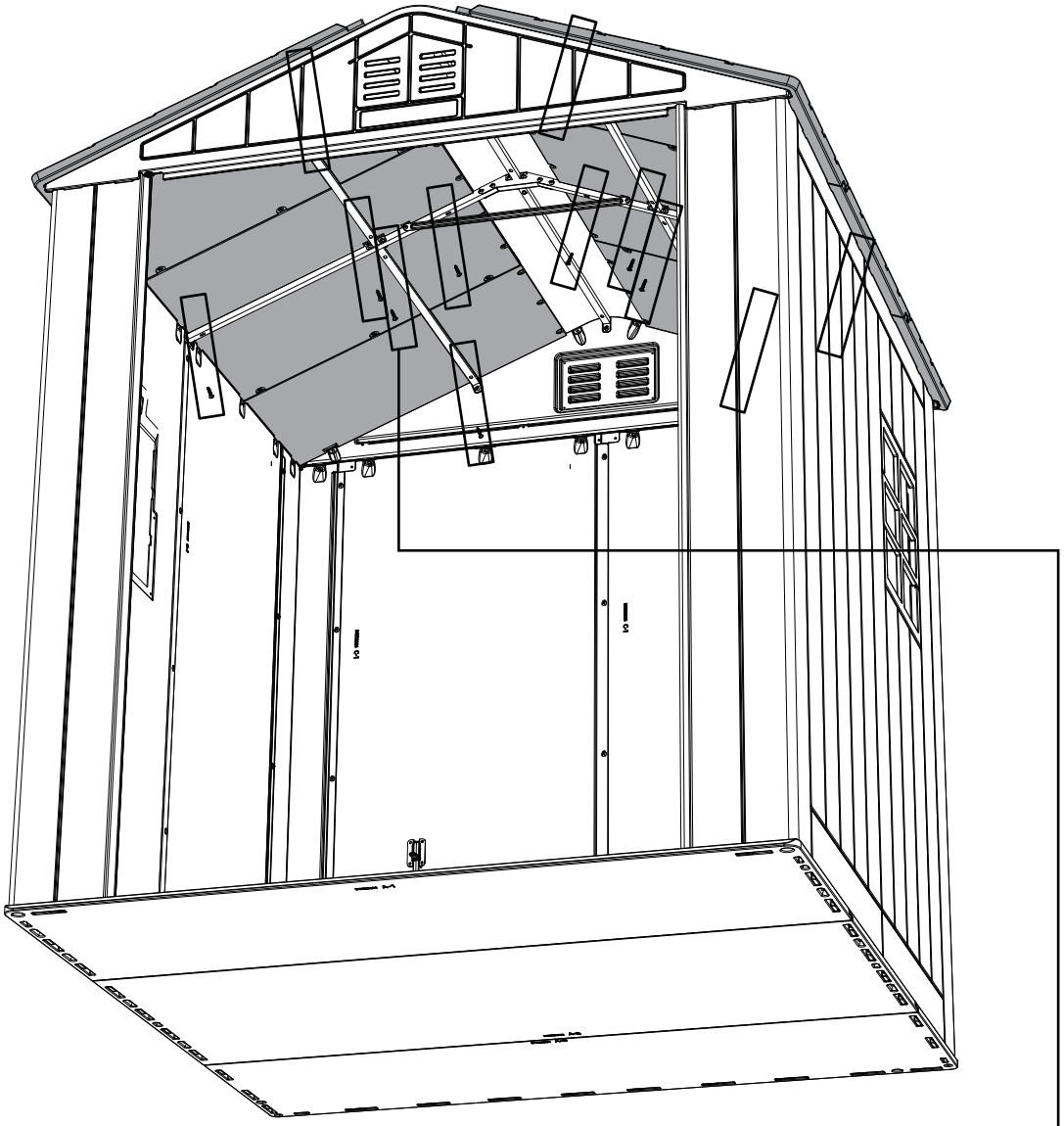

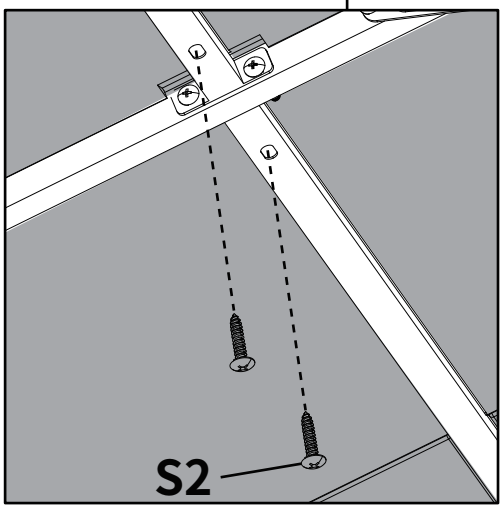

Note: The screws on both sides should be installed uniformly.

11 Installation of tile covers

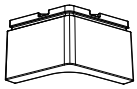
H-1

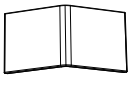
H-3

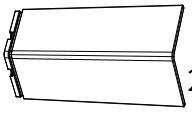
H-2
2pcs


S2
4pcs


S1
30pcs

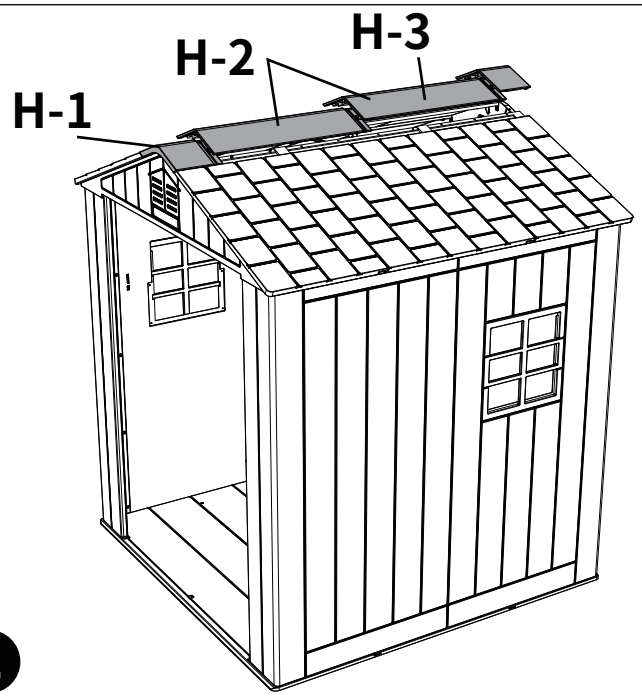

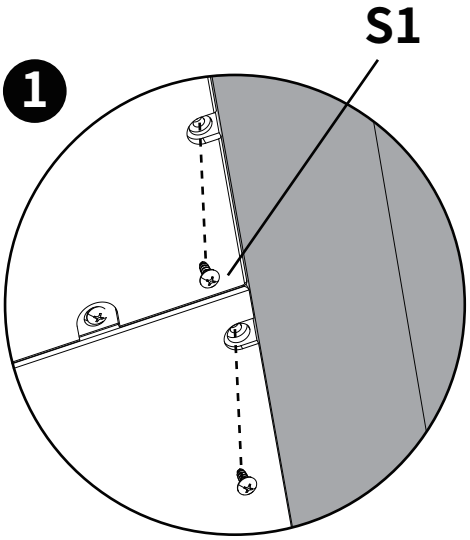

2

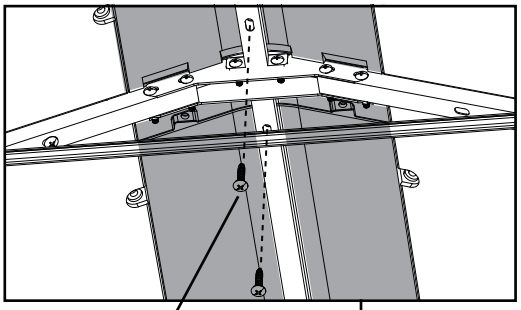

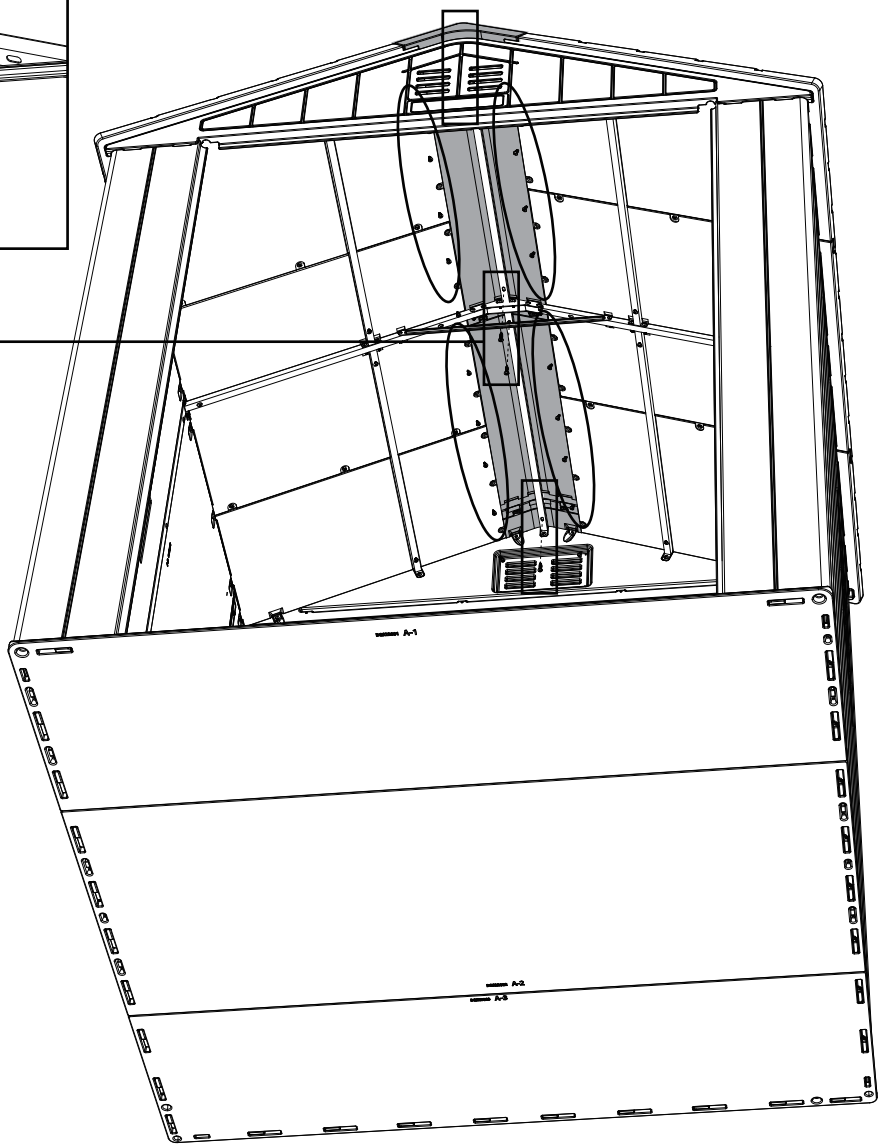

12 Door panel installation

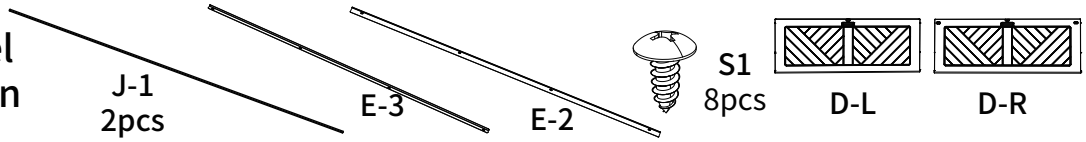

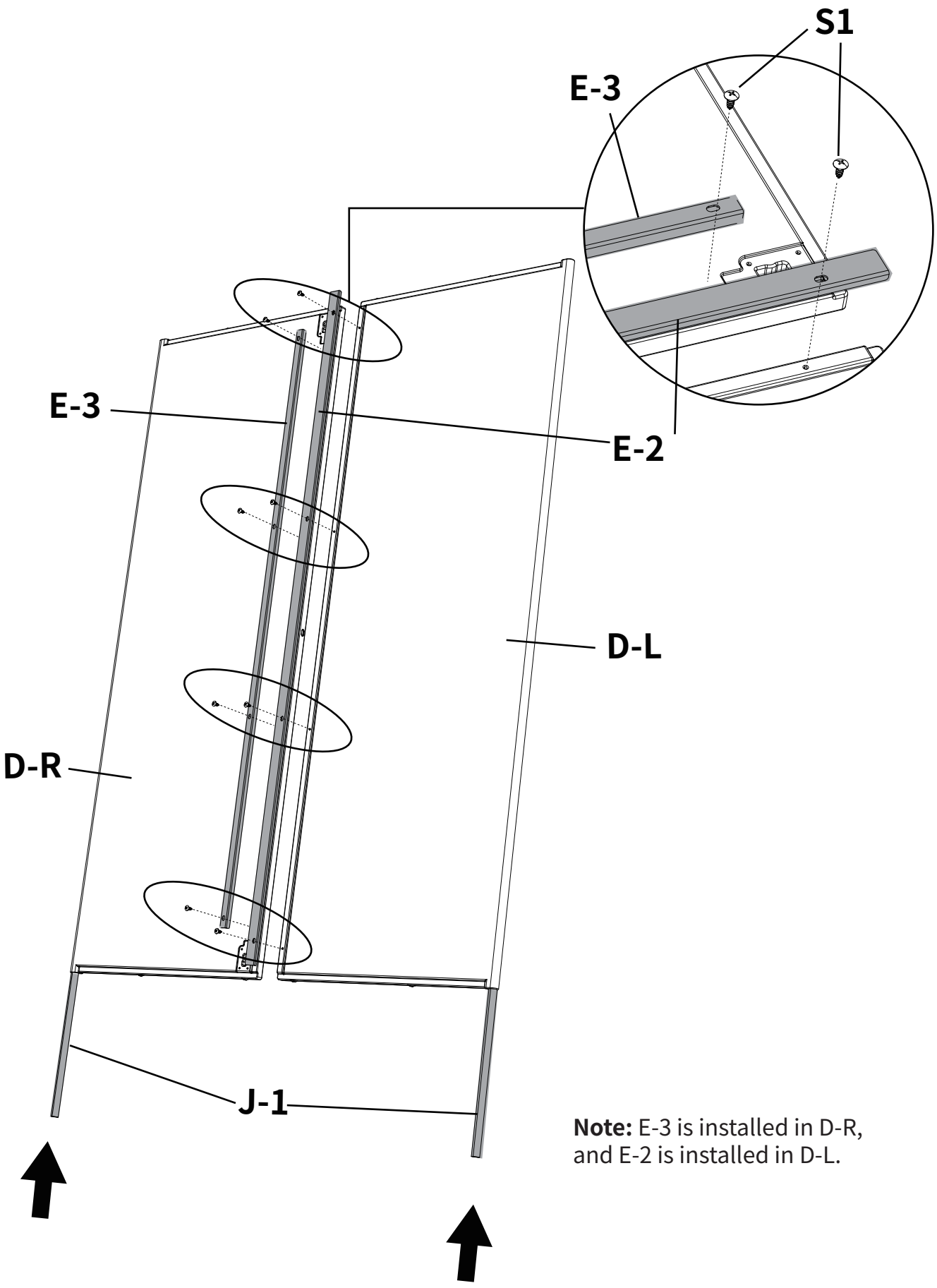

Note: E-3 is installed in D-R, and E-2 is installed in D-L.

13 Door panel installation

S1
8pcs

M
2pcs

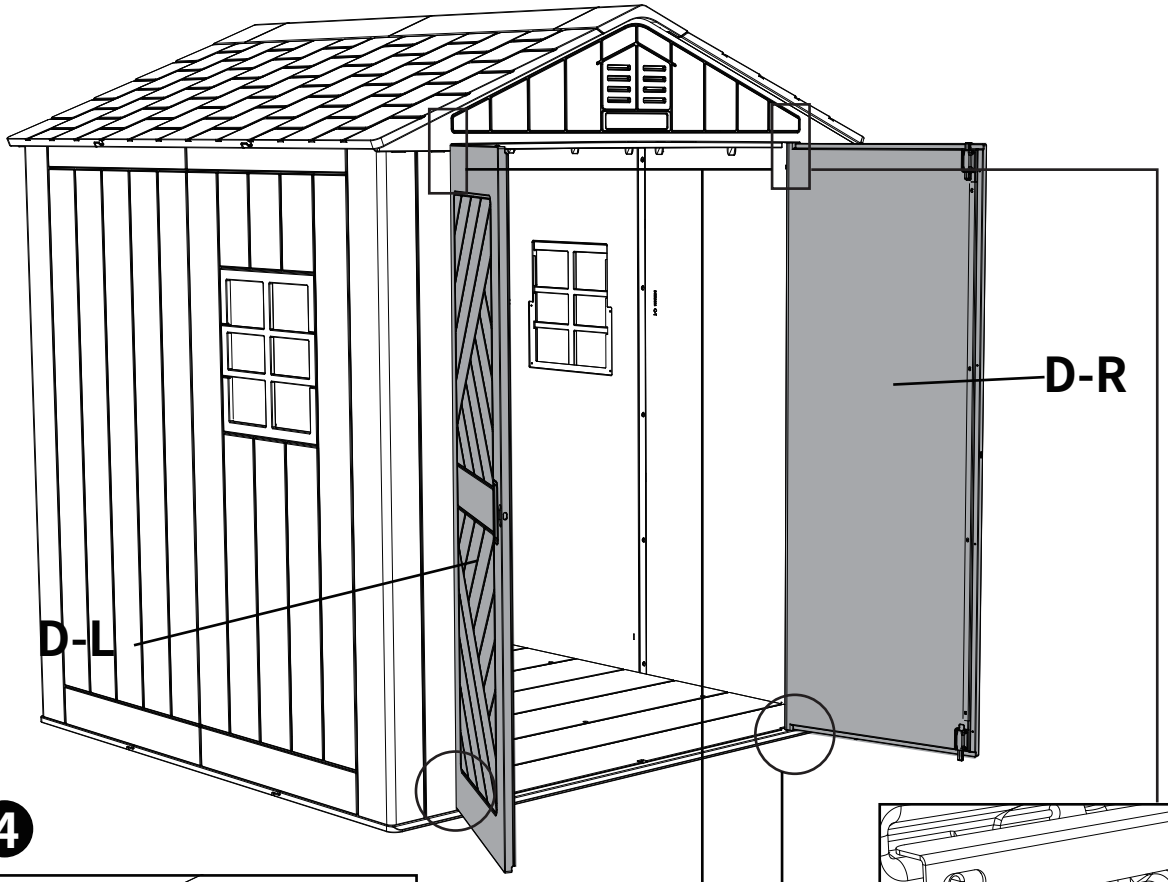

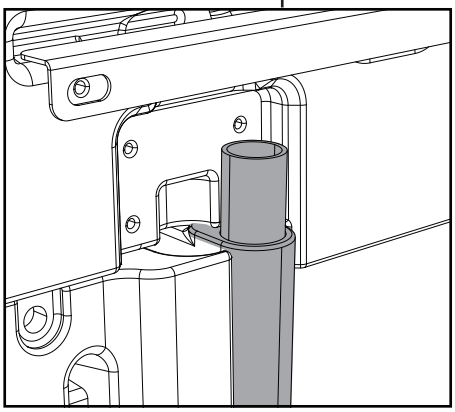

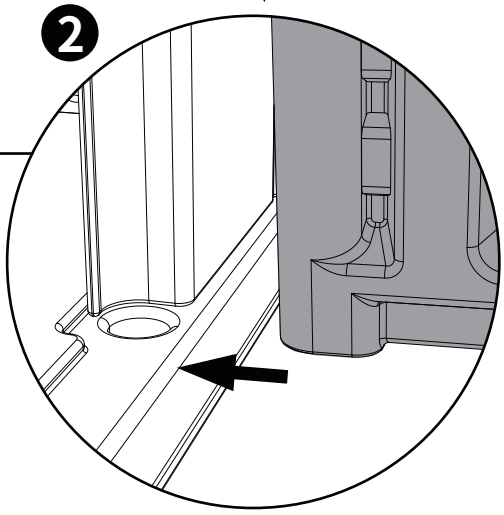

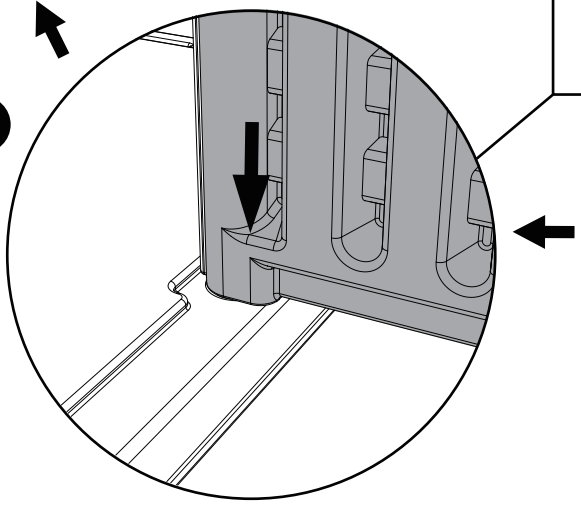

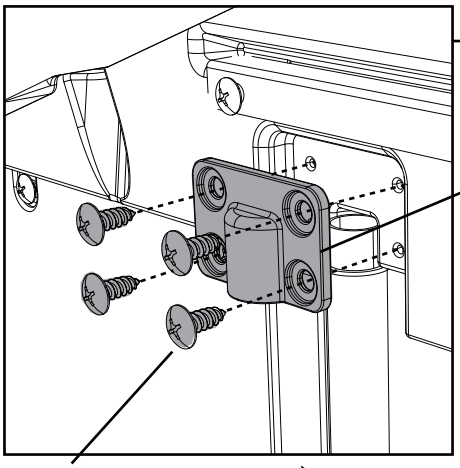

Note: The internal metal pipe is inserted into the floor.

14 Door panel installation

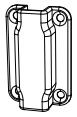
L2
2pcs

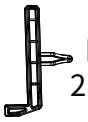
L3
2pcs

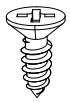
S3
8pcs

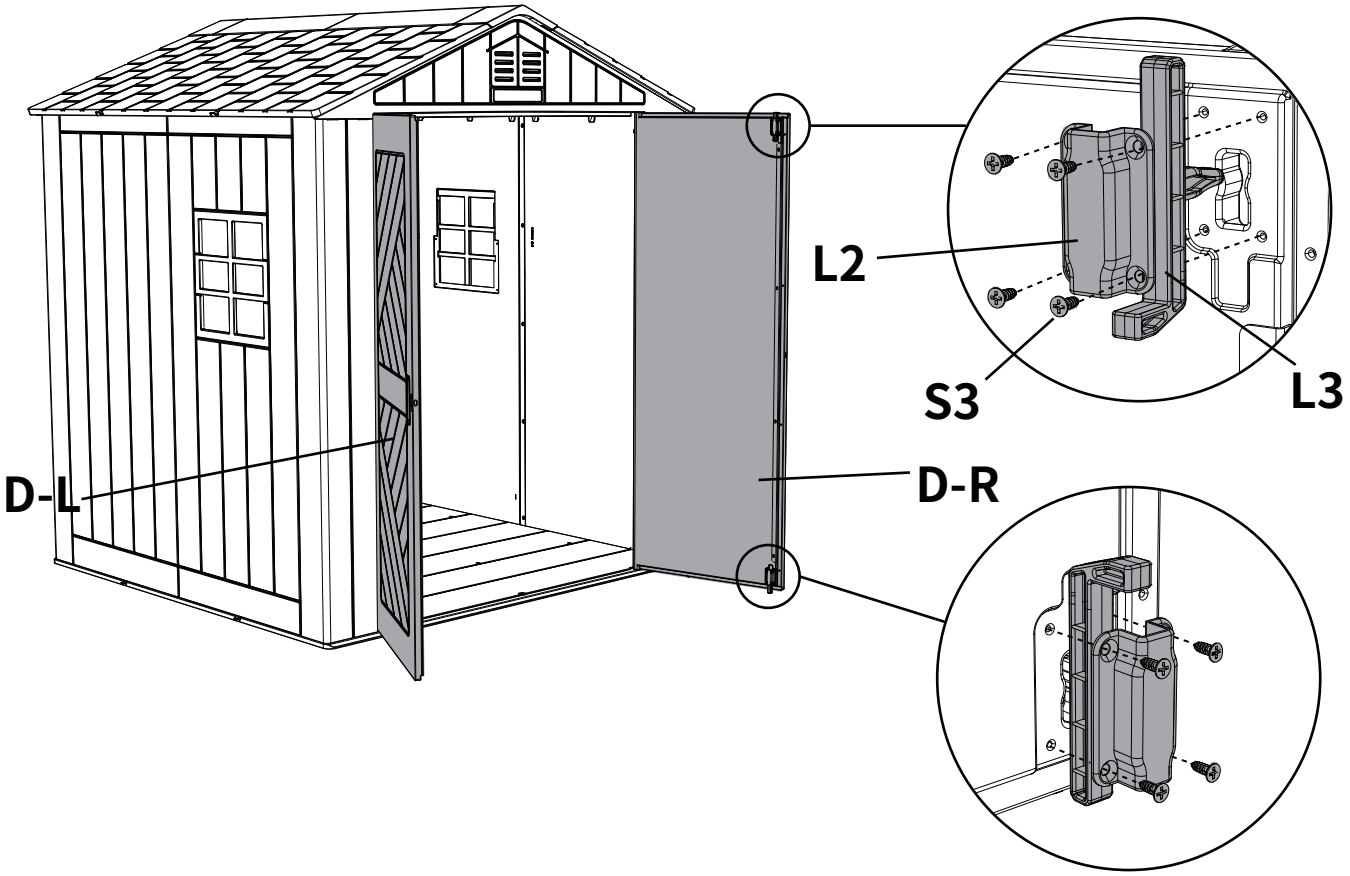

Note: The upper pin L3 should face upwards and the lower pin L3 should face downwards.

15 Installation of expansion screws

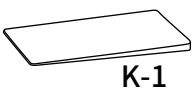
K-1
4pcs


S6
4pcs

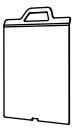
P
2pcs

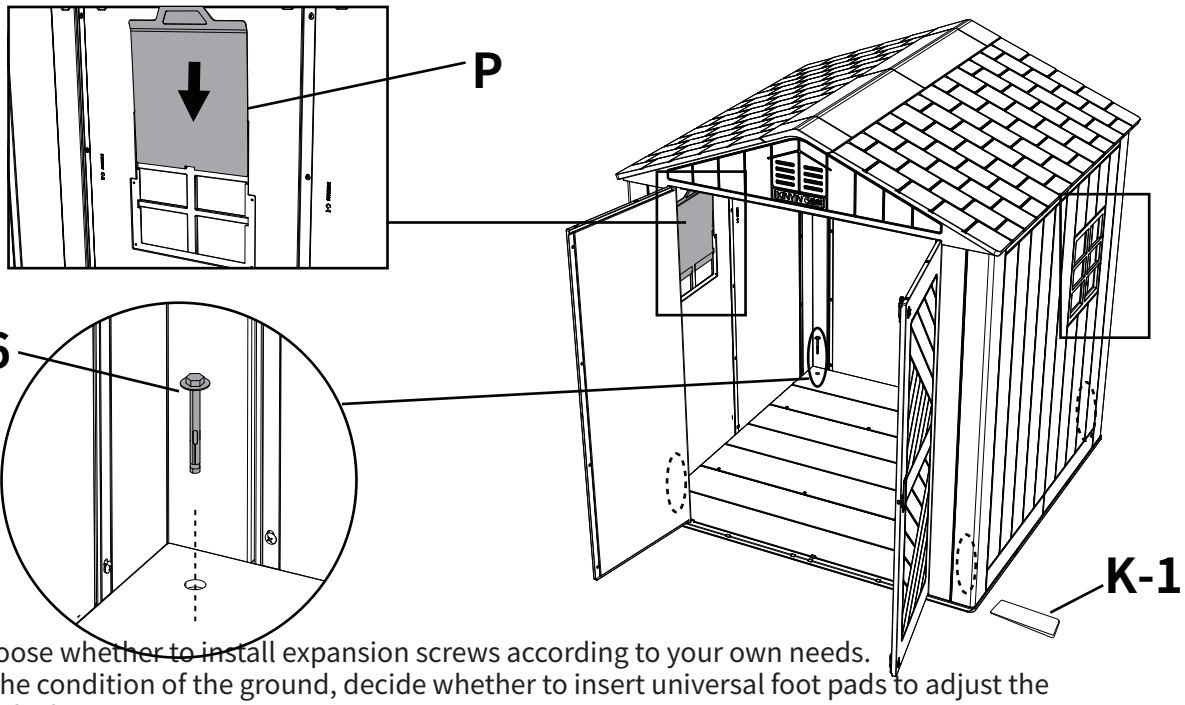

Note: Choose whether to install expansion screws according to your own needs. Based on the condition of the ground, decide whether to insert universal foot pads to adjust the balance of the house.