KING SMITH
WALKINGDESK

WALKINGDESK

INSTRUCTIONS

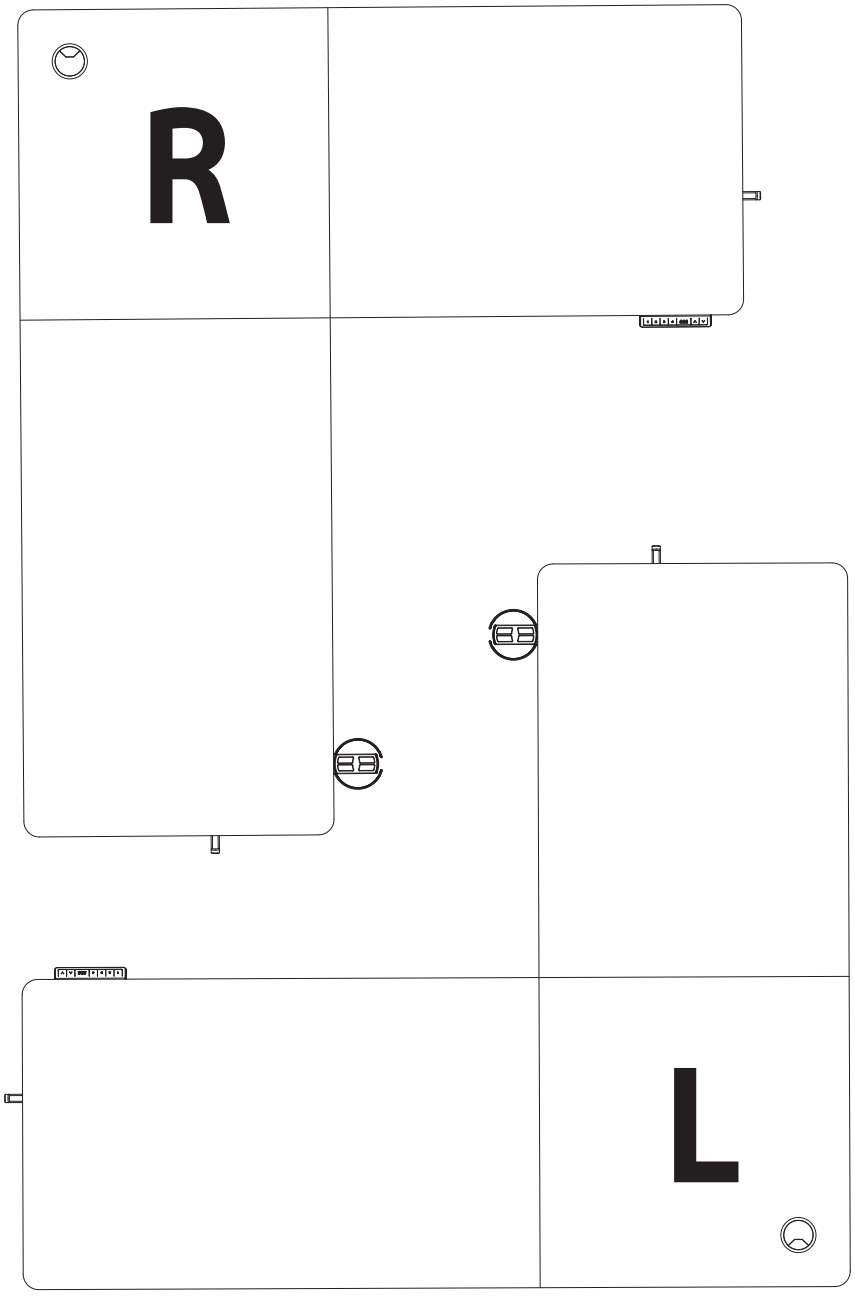

ETSLI21

Hours: Monday to Friday, 9 a.m to 5 p.m

(US) 1-(888)-292-4009 Email: support-desk@kingsmithfitness.com

Caution

Keep children and animals away from the desk during use. Ensure the desktop is not touching any walls.
Remove obstacles taller than 20"/51 cm from underneath the desk.
Operate only in a working environment temperature of 32° F−104° F/0° C−40° C.
Keep product away from corrosive gases, liquids and dusty objects.
Keep hands, feet and other body parts in a safe position during operation. Anti−collision is not automatically enabled during all resets.
The company does not bear any warranty or liability for damage and human injury caused by any abnormal or un−intended operation of the equipment.
It is necessary to perform a manual reset after the initial installation or power cycling the equipment.
Power adapter (model GRP−30W290010−CC) 29.0V⎓1.5A: only for altitudes of 2000 meters and below, only for non−tropical climate conditions.



1. Two−person installation is recommended.
2. Please install it on the carpet to avoid scratching the desktop.

Parts List

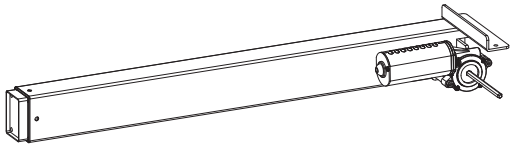

A x1

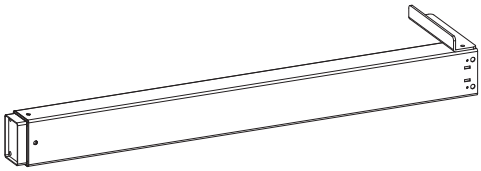

B x1

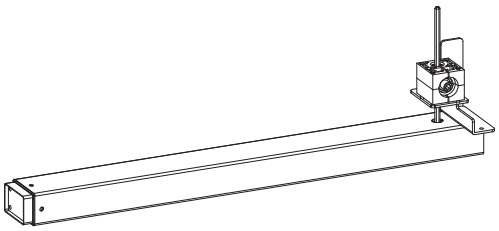

C x1

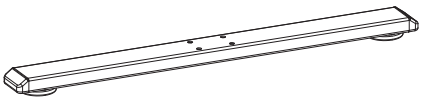

D x2

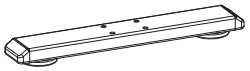

E x1

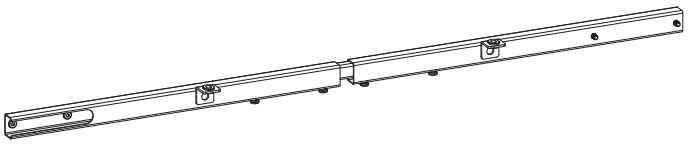

F x2

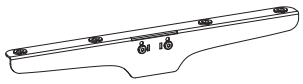

G x3

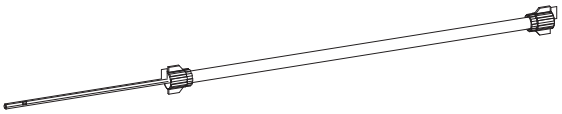

H x2

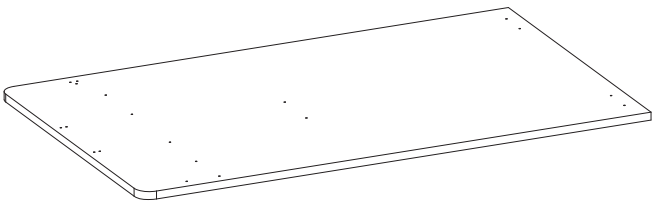

I x1

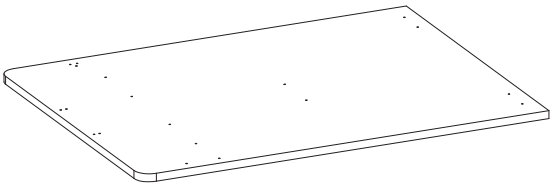

J x1

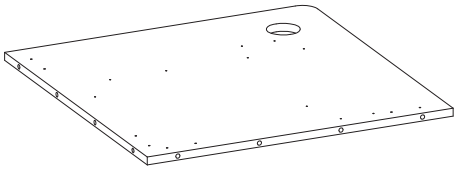

K x1

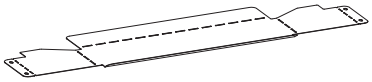

L x1

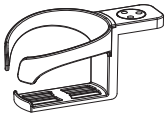

M x1

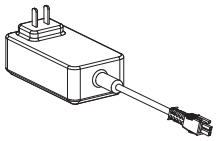

N x1

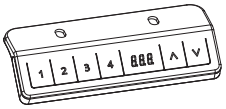

O x1

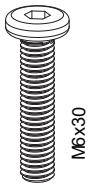

① x4

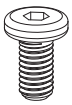

② x22



③ x 38



④ x 3



⑤ x4



⑥ x8



⑦ x4



⑧ x1

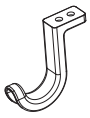

⑨ x 2



⑩ x1



⑪ x 3



⑫ x 3



①x 1



②x1



③x 1



④x 1



⑤x1

Note: For serial numbers ①、②、③、④、⑤、one more will be for backup.

Install the right-side desk

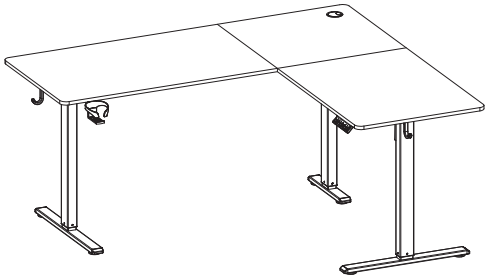

Note: installation steps 1–19.

1

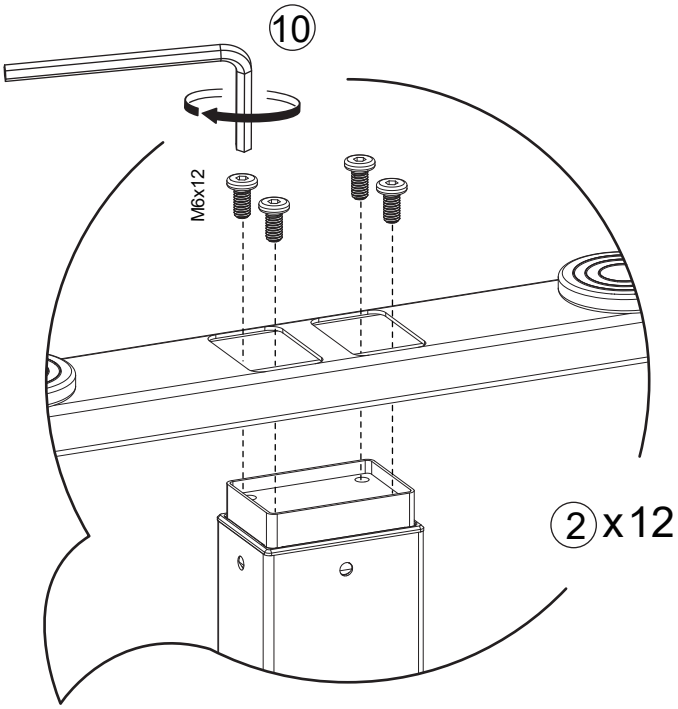

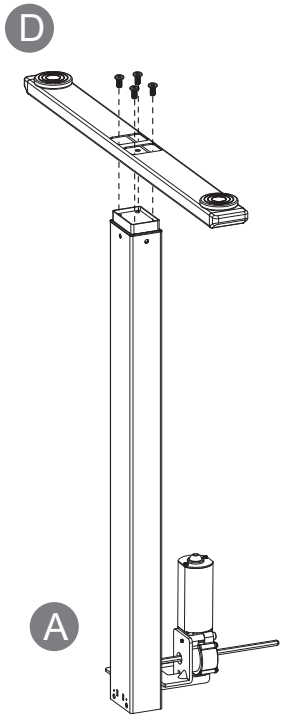

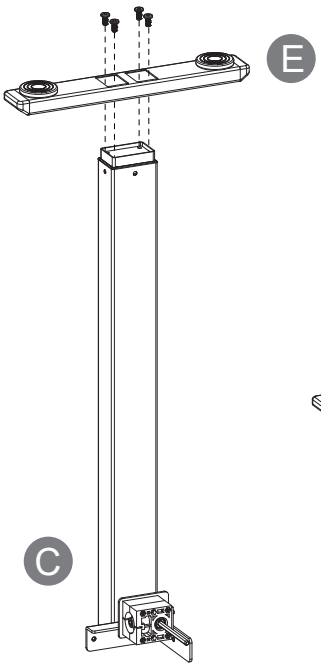

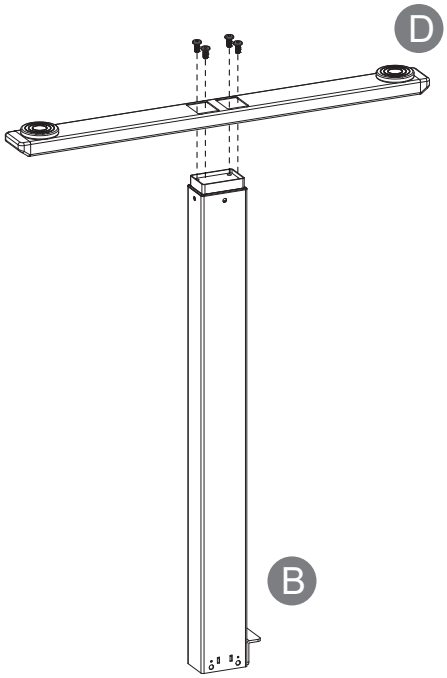

2 Two people are required to install it.

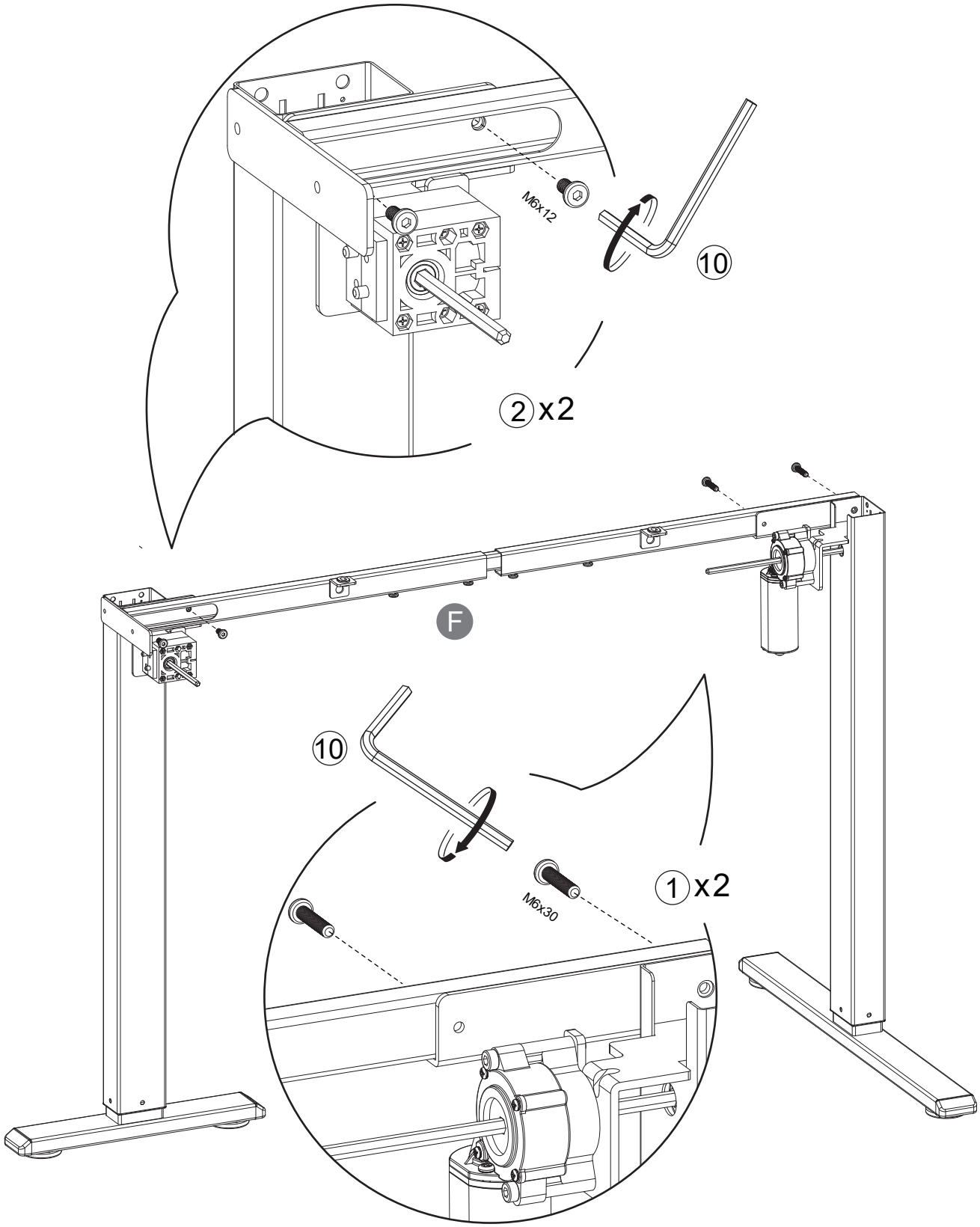

3

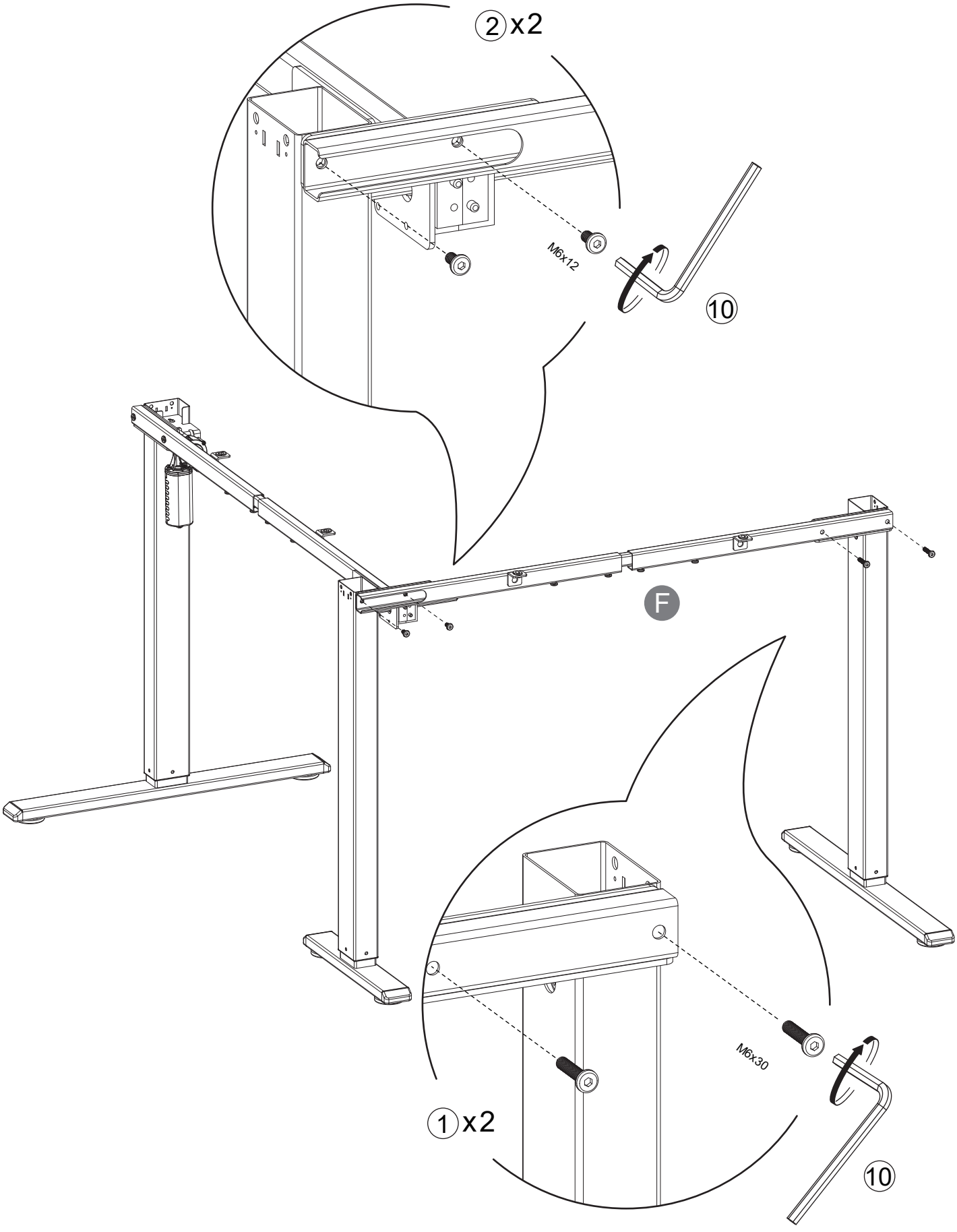

4

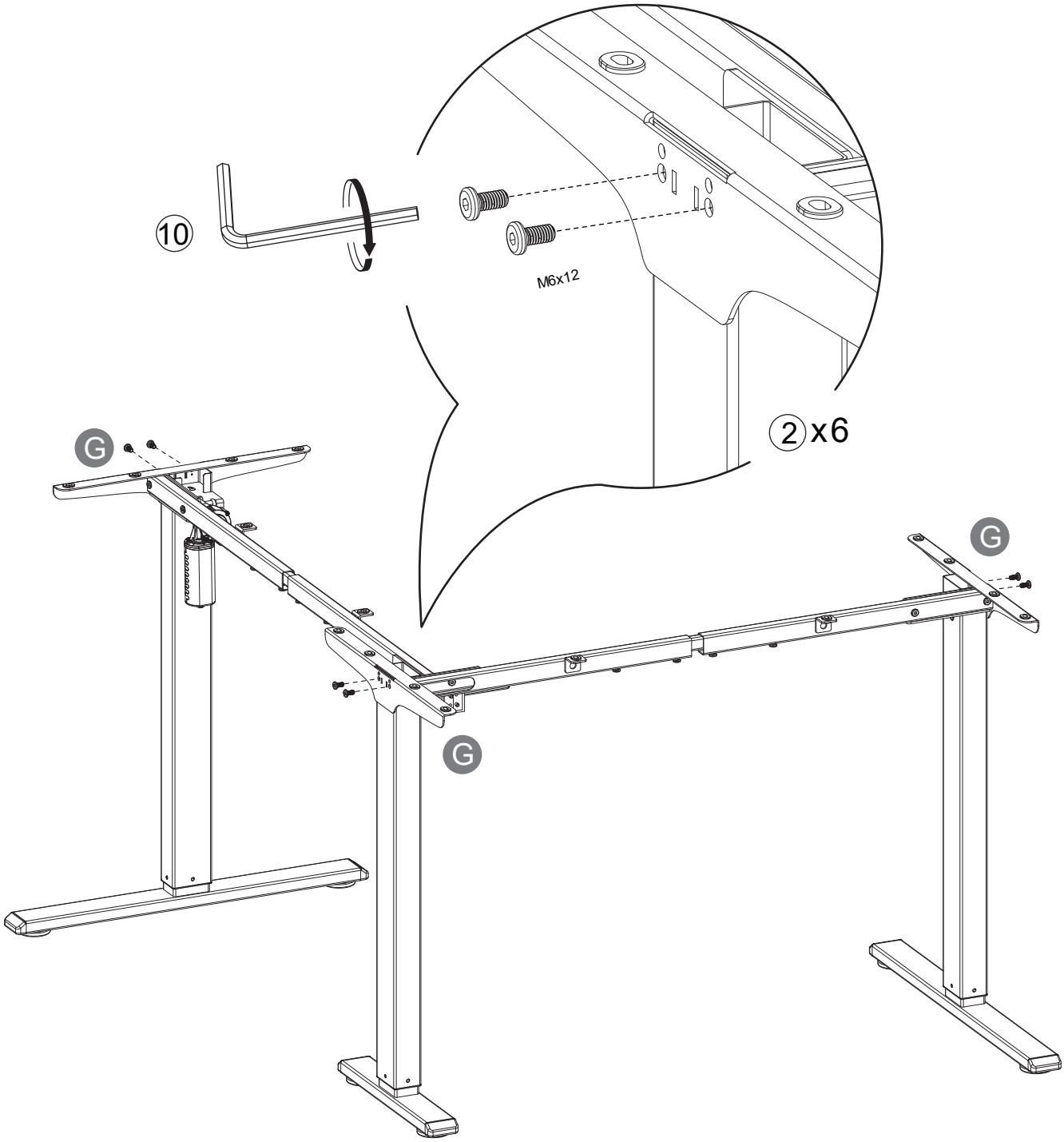

5

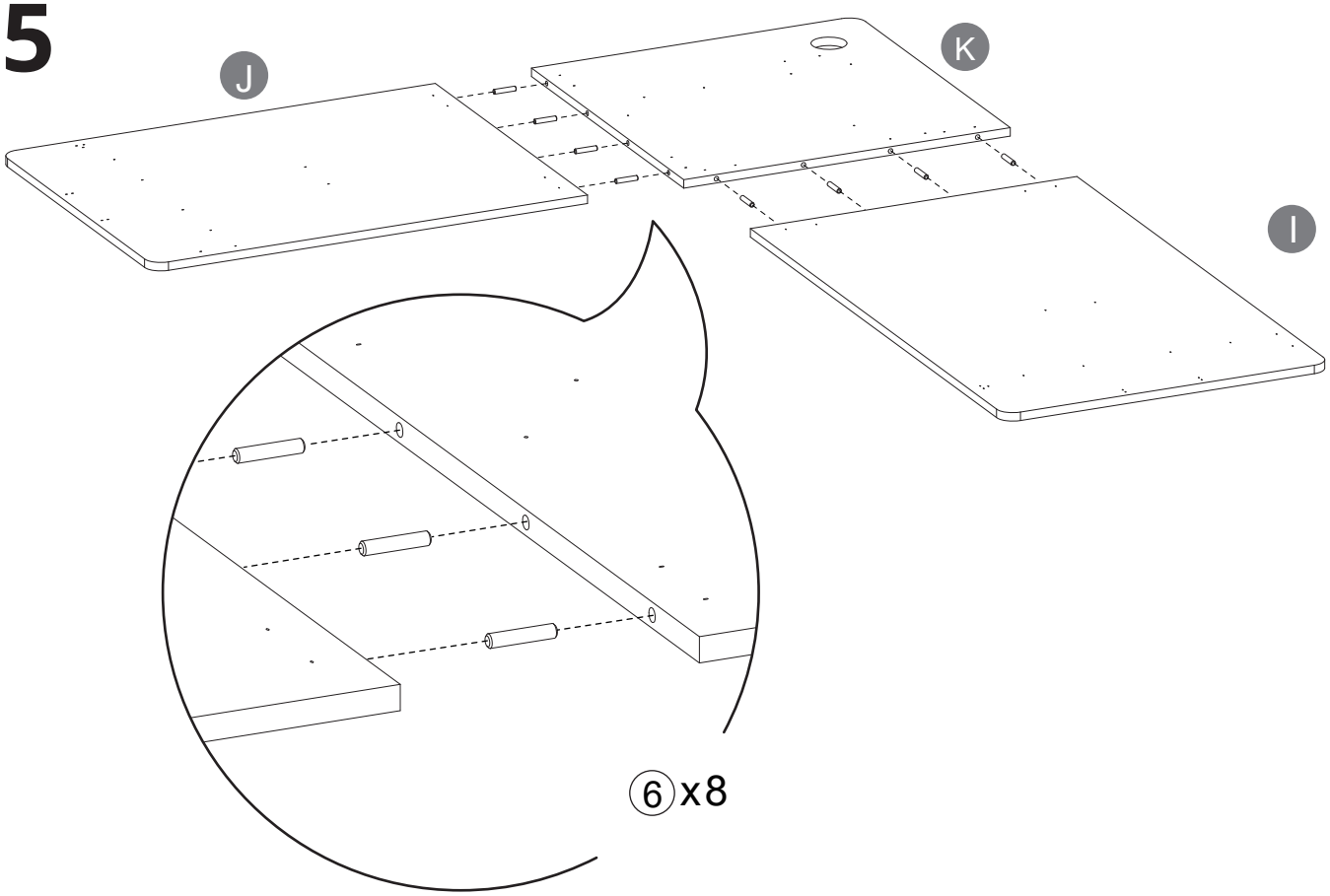

6

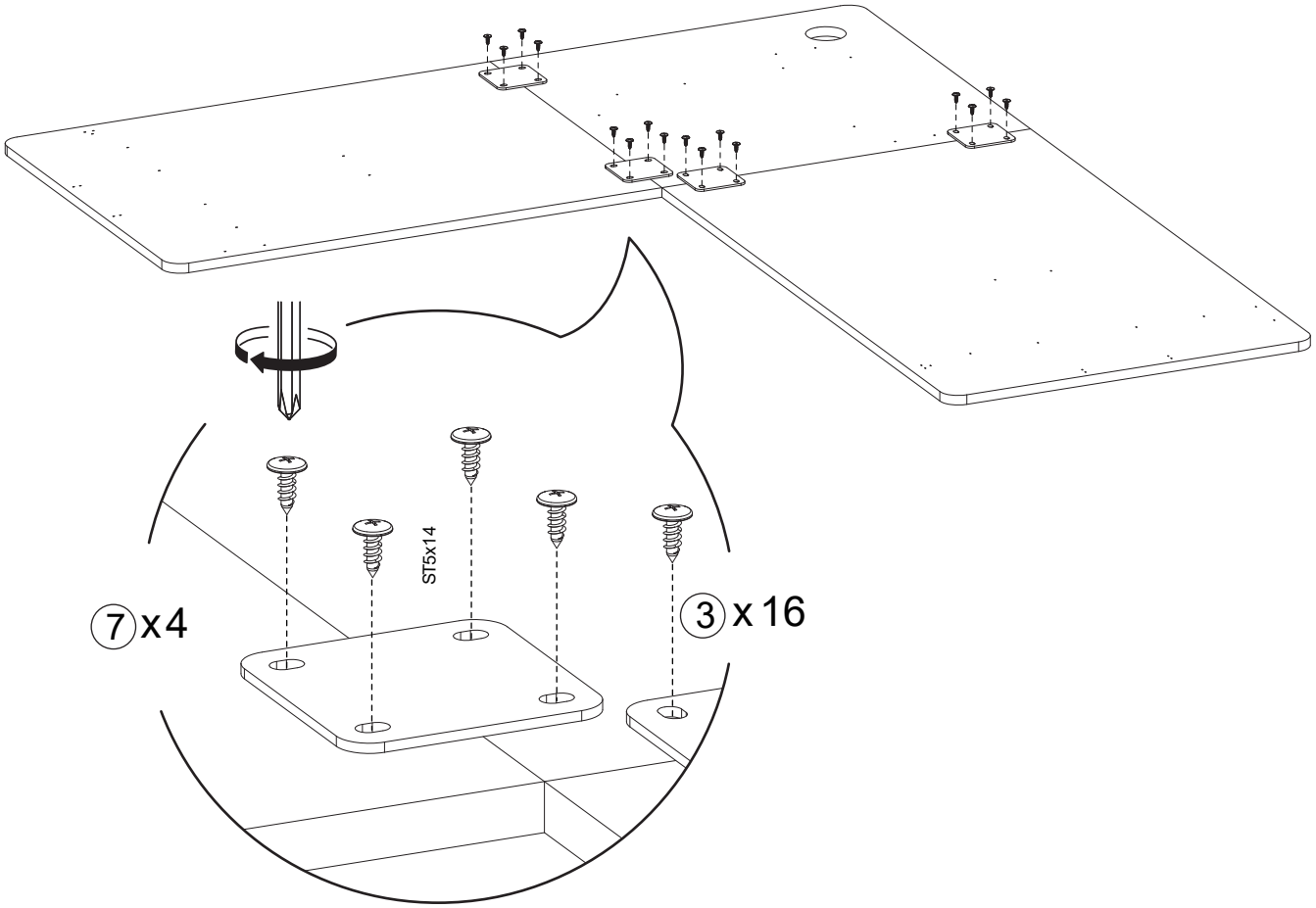

7 Loosen the screws and move the frame to adjust to the corresponding position.

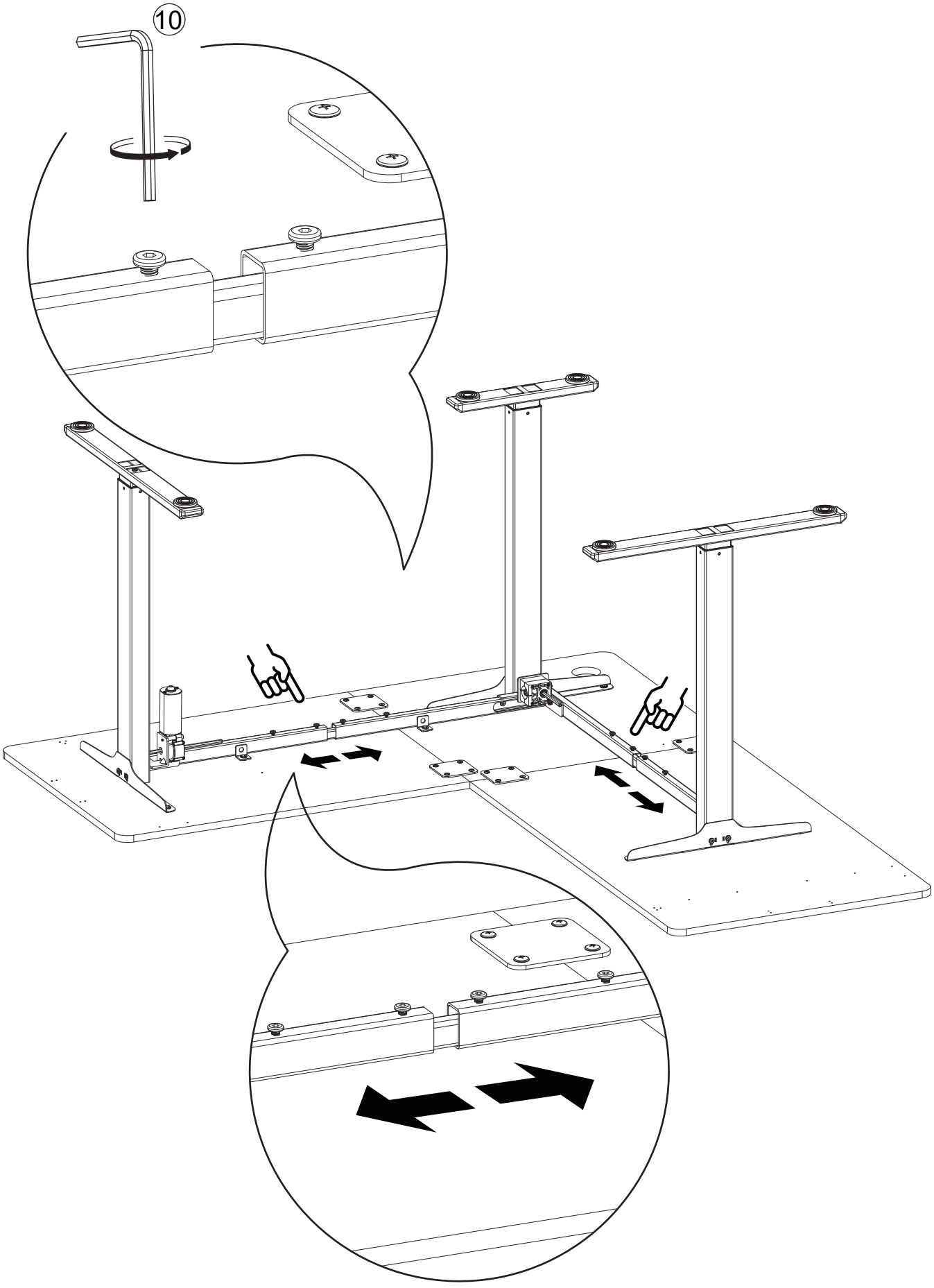

8

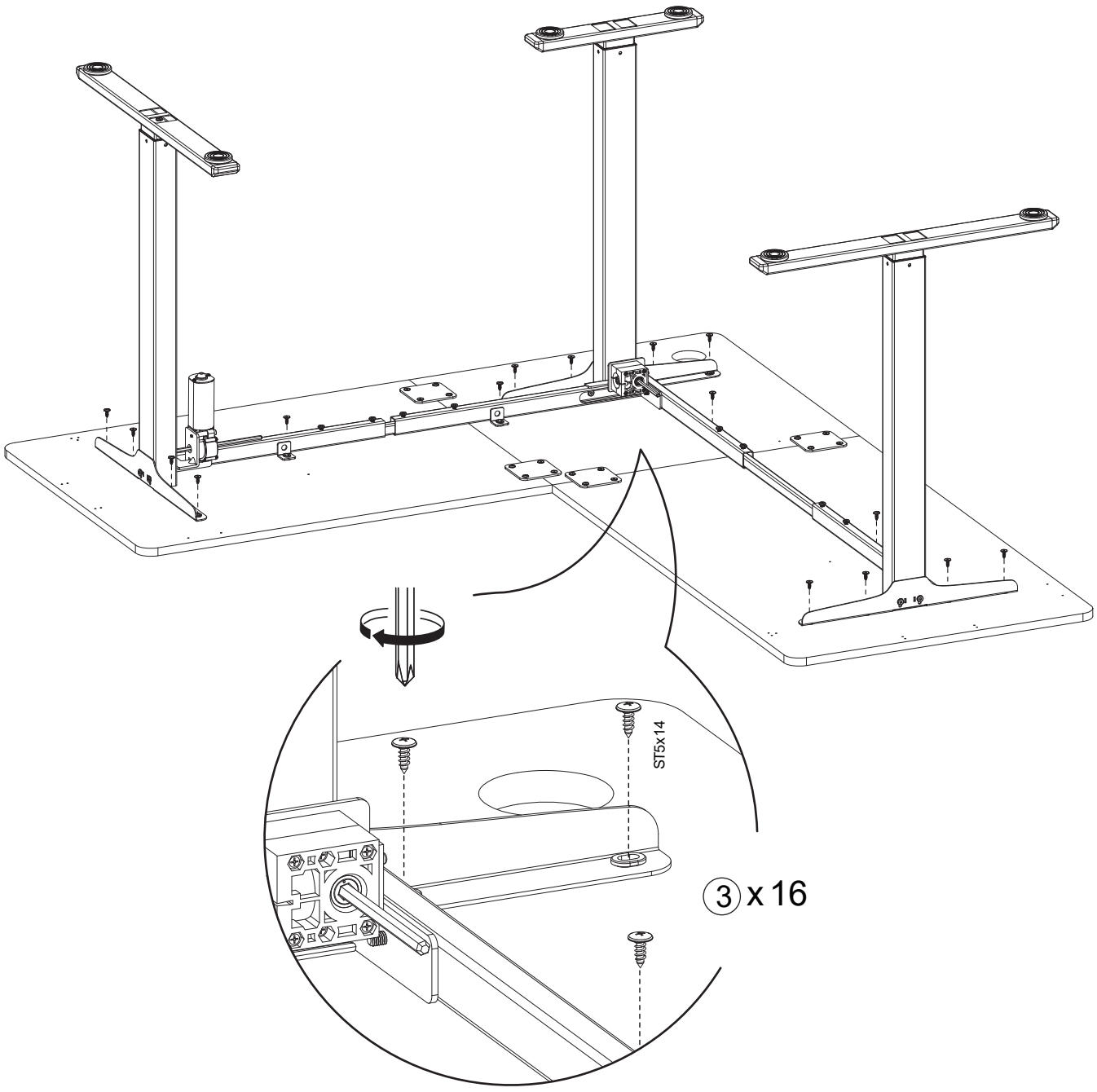

9

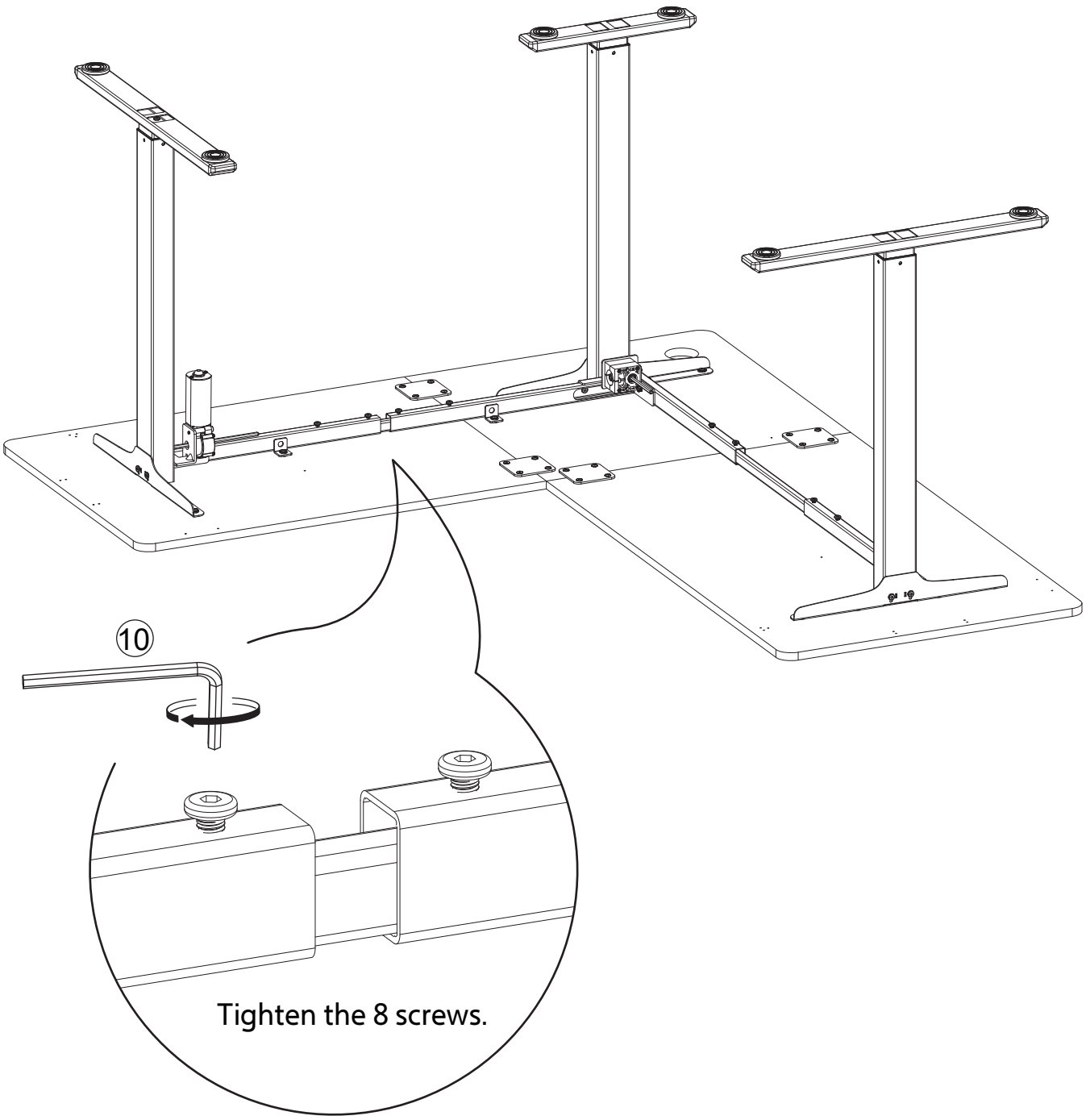

10

Note: Before installing the mechanical bearing, check that the column height is balanced and aligned.

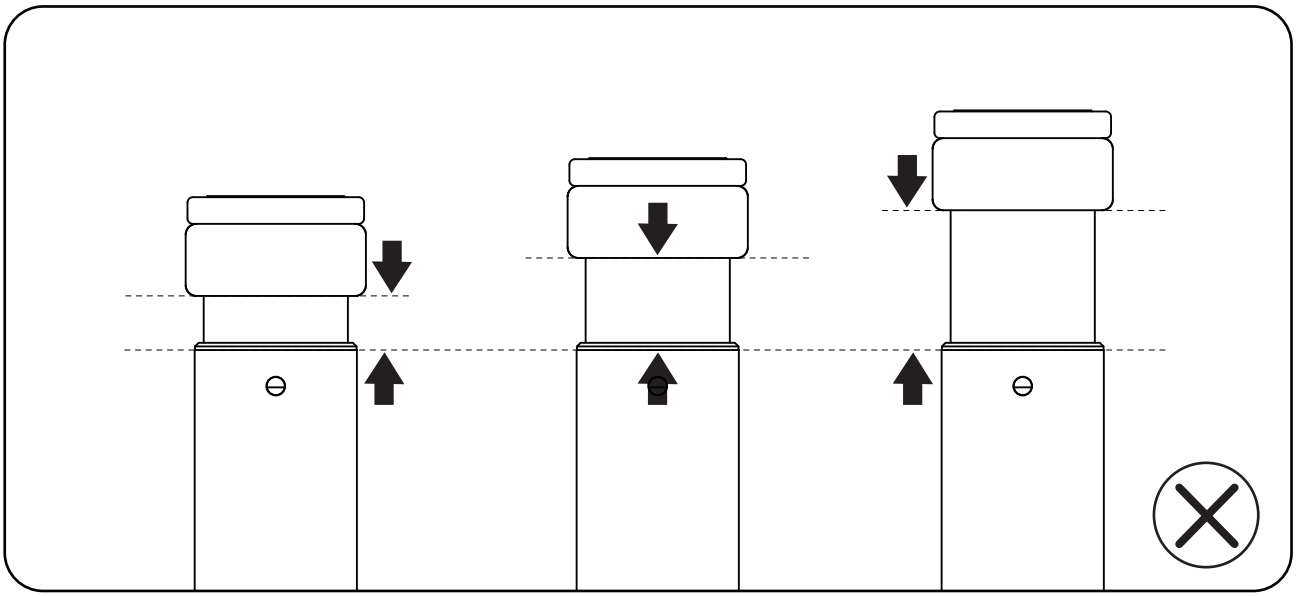

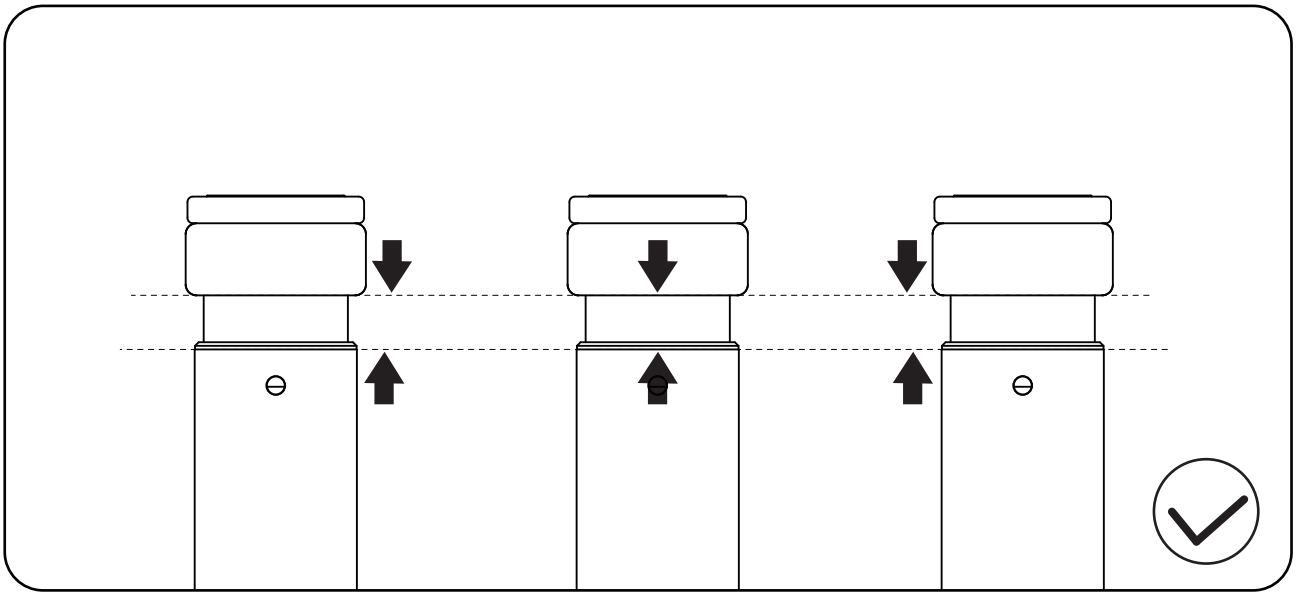

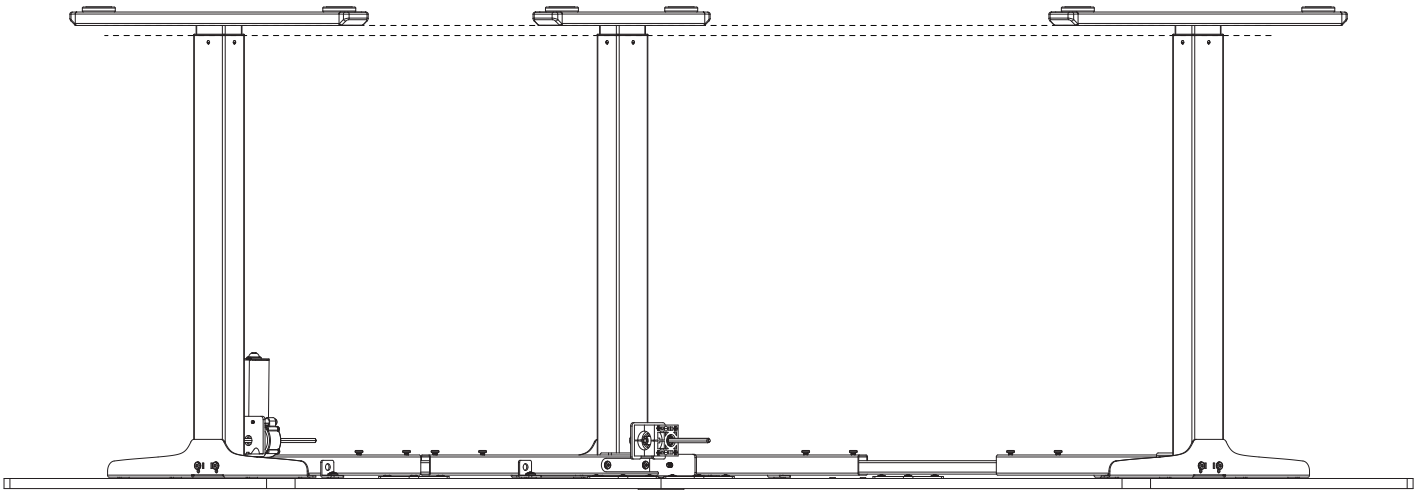

11

Before installing, loosen counterclockwise.

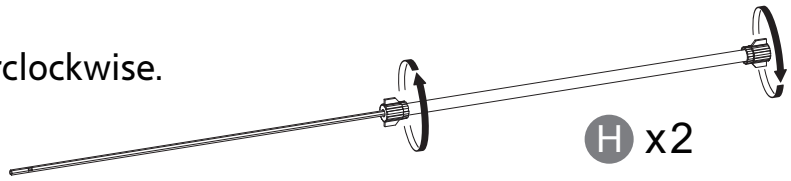

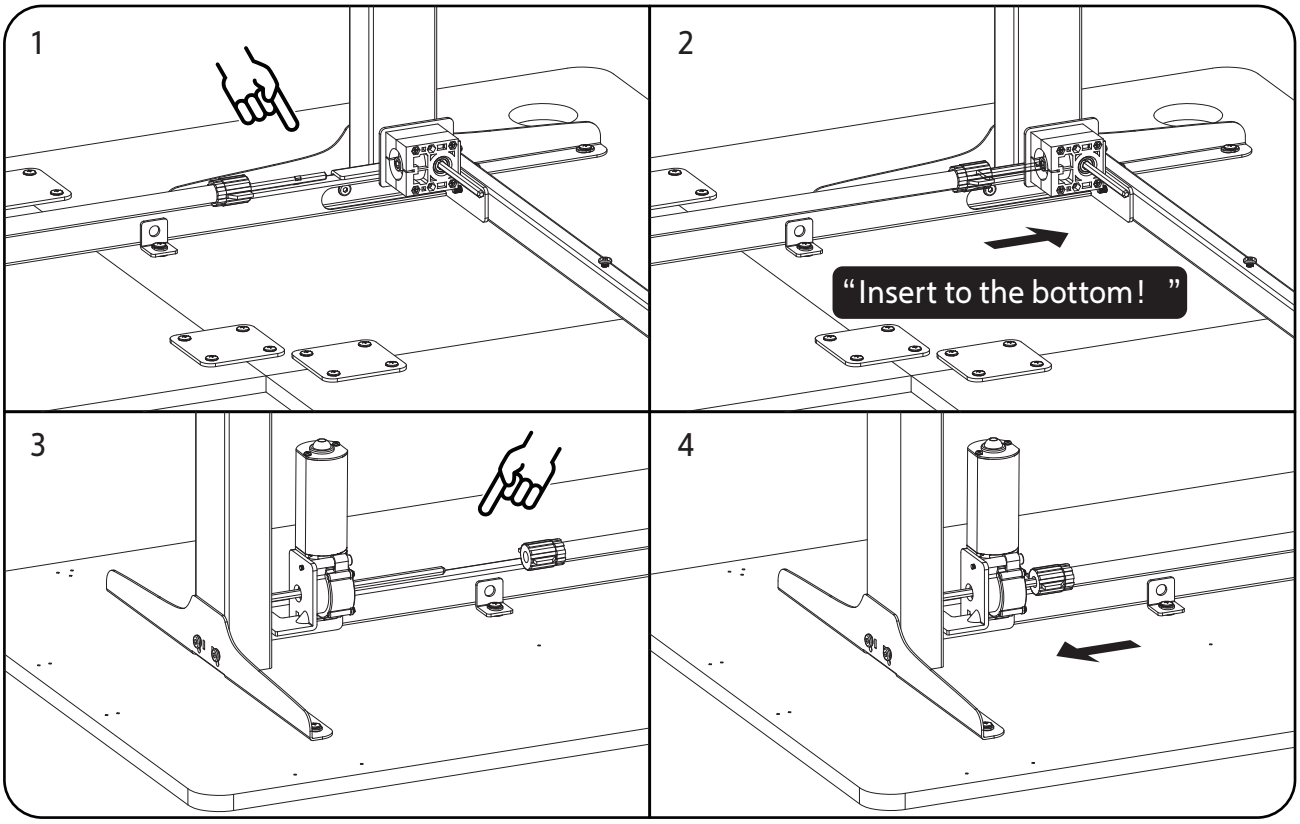

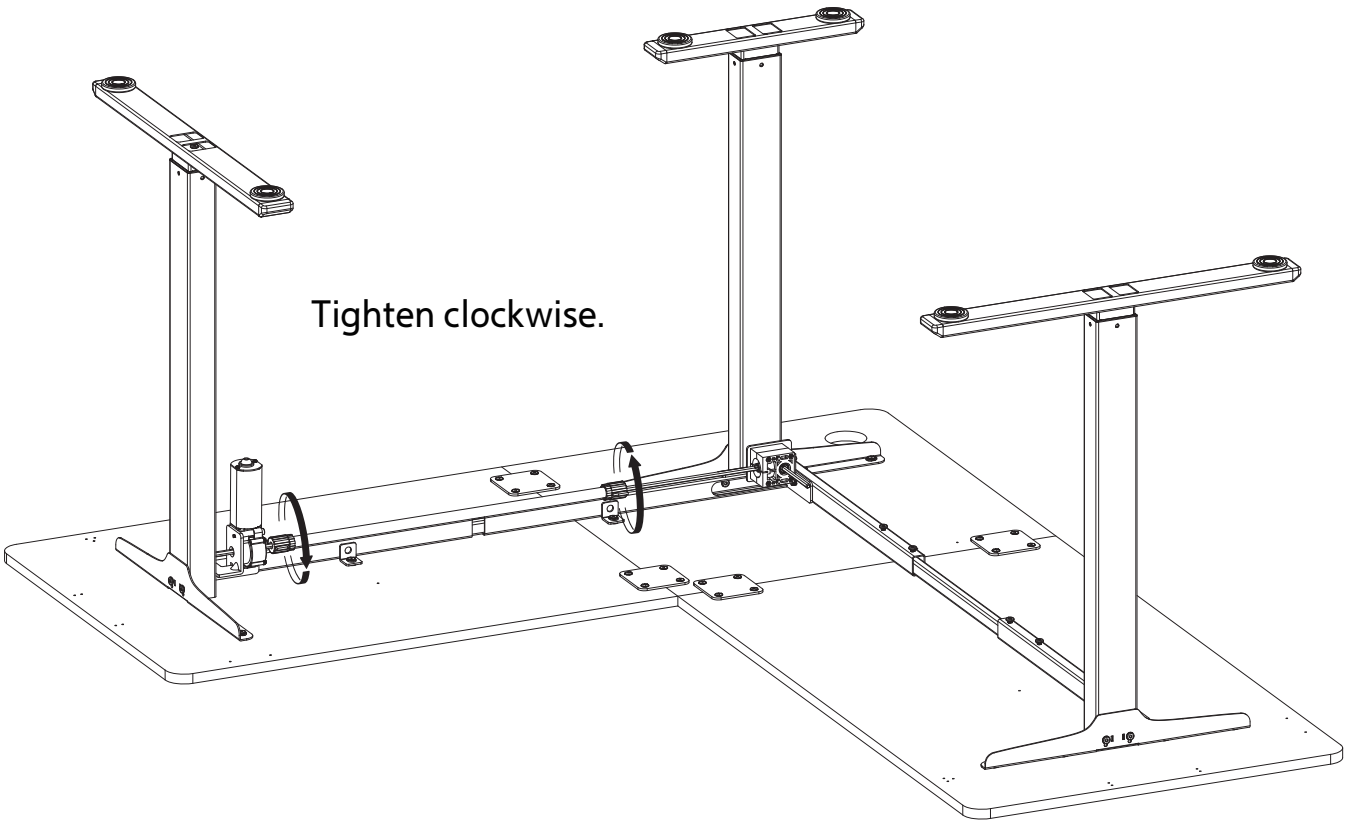

12

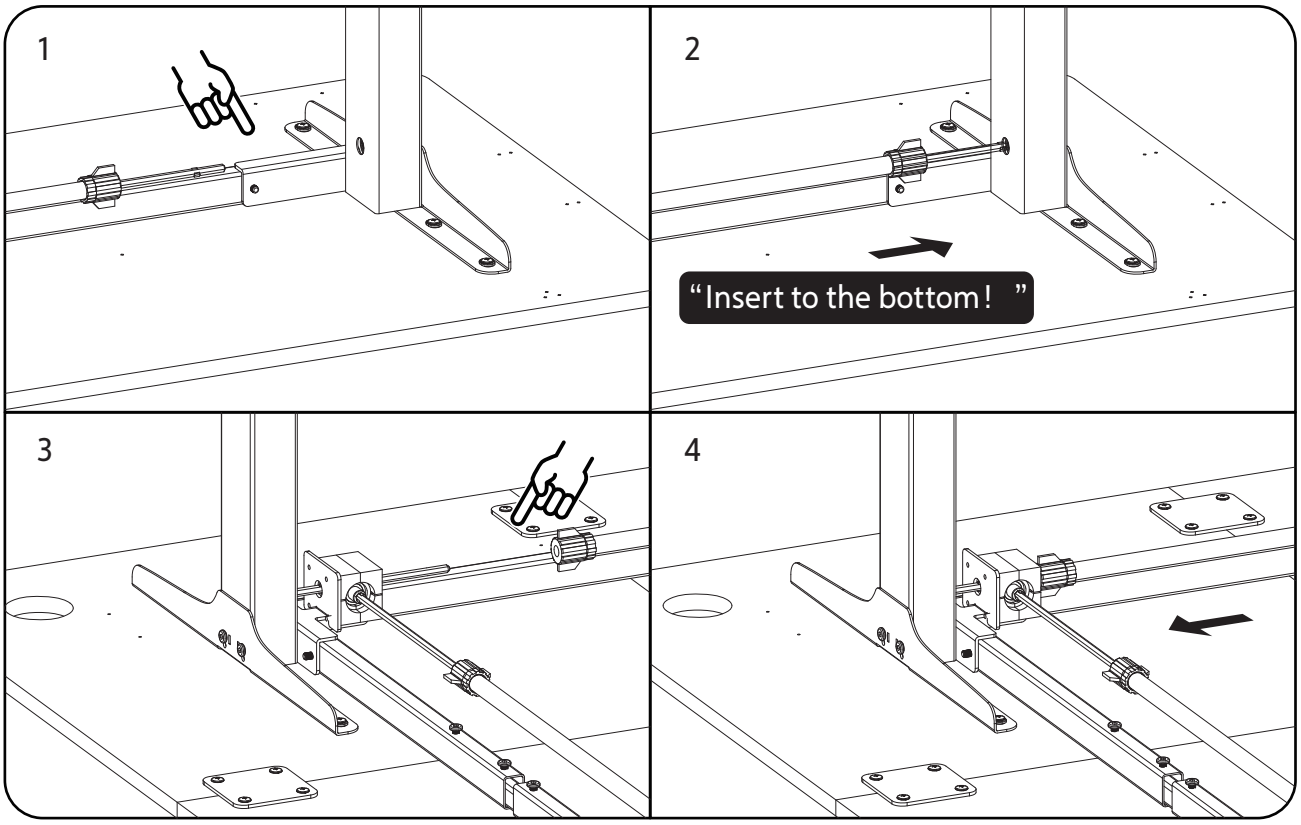

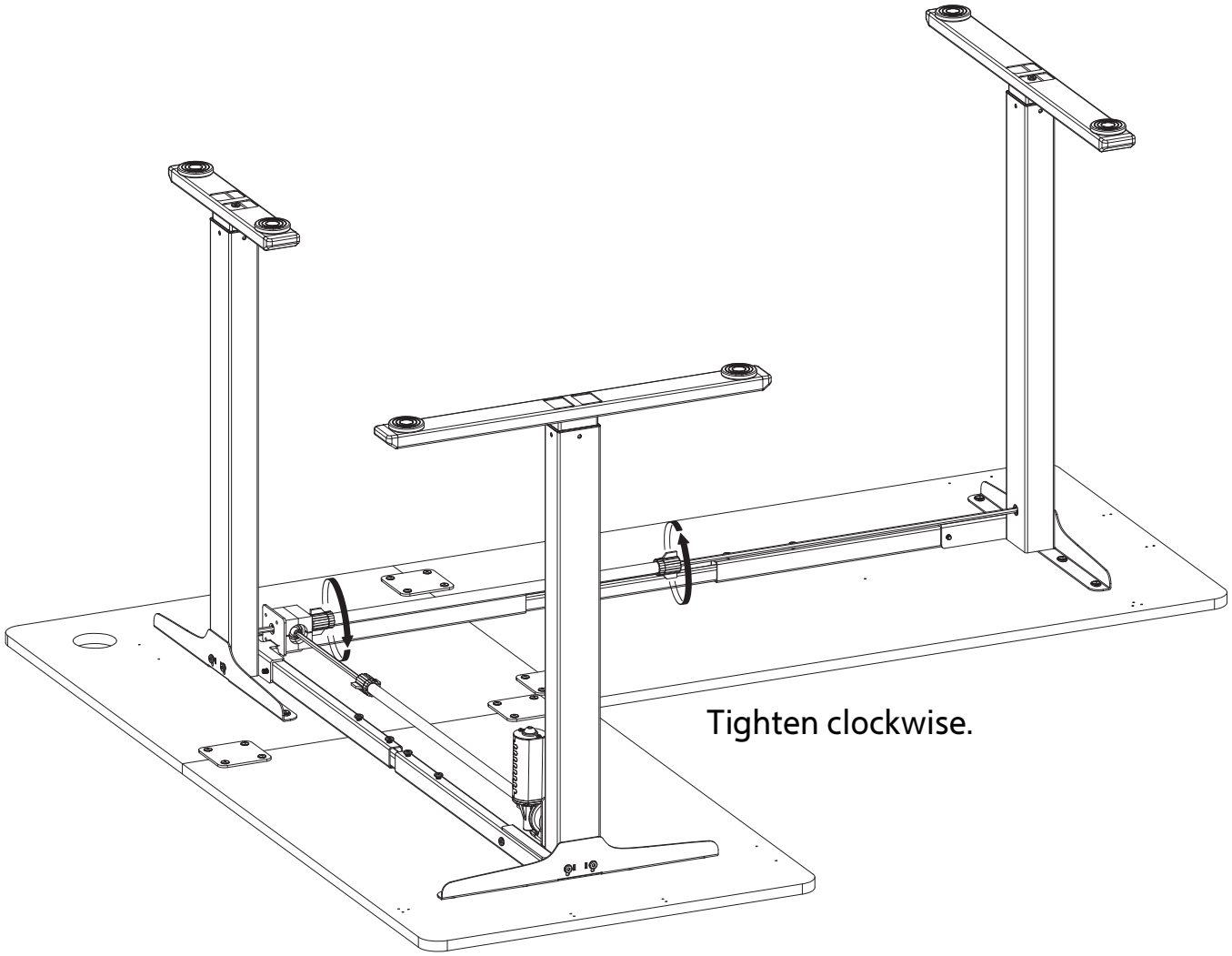

Tighten clockwise.

13

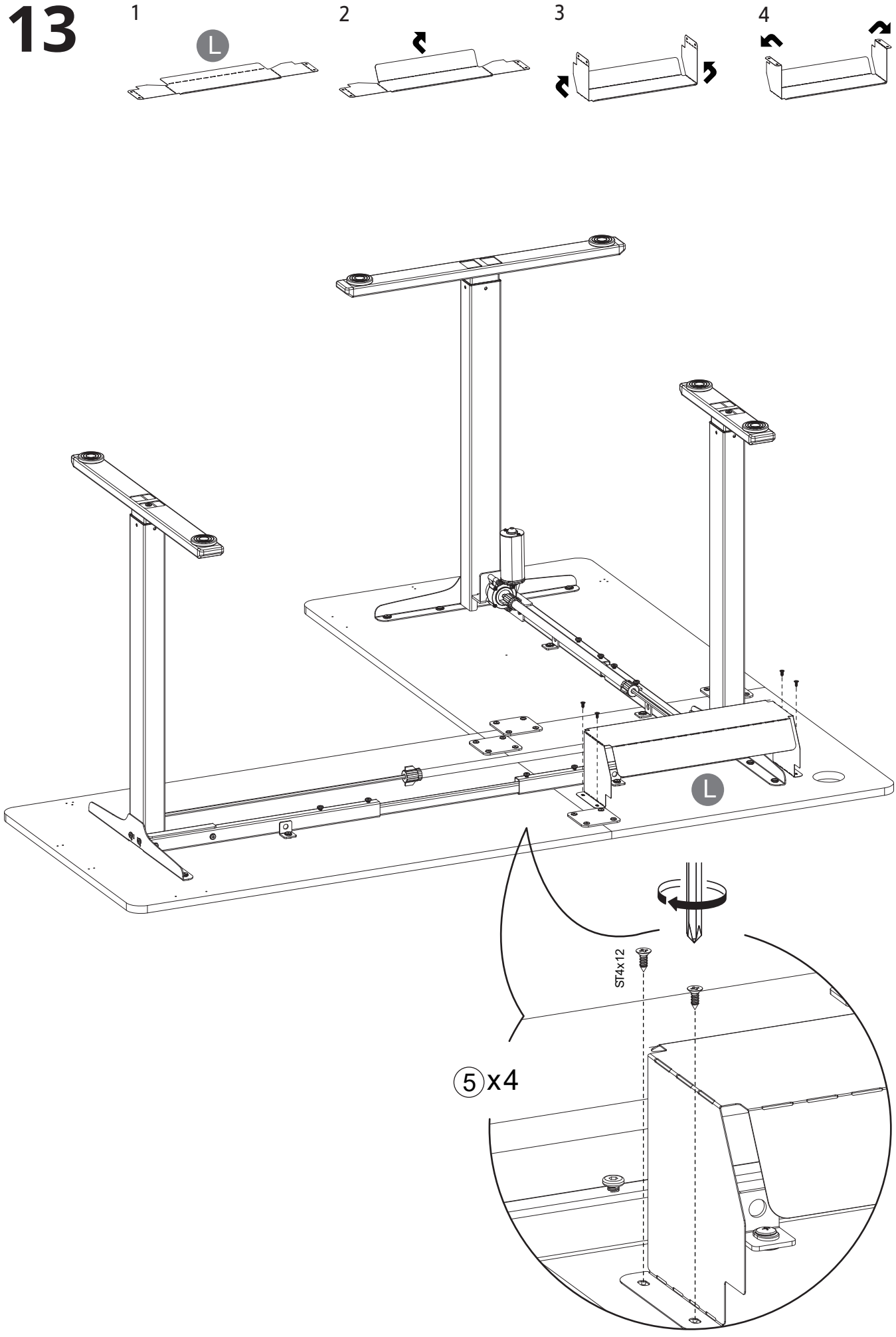

14

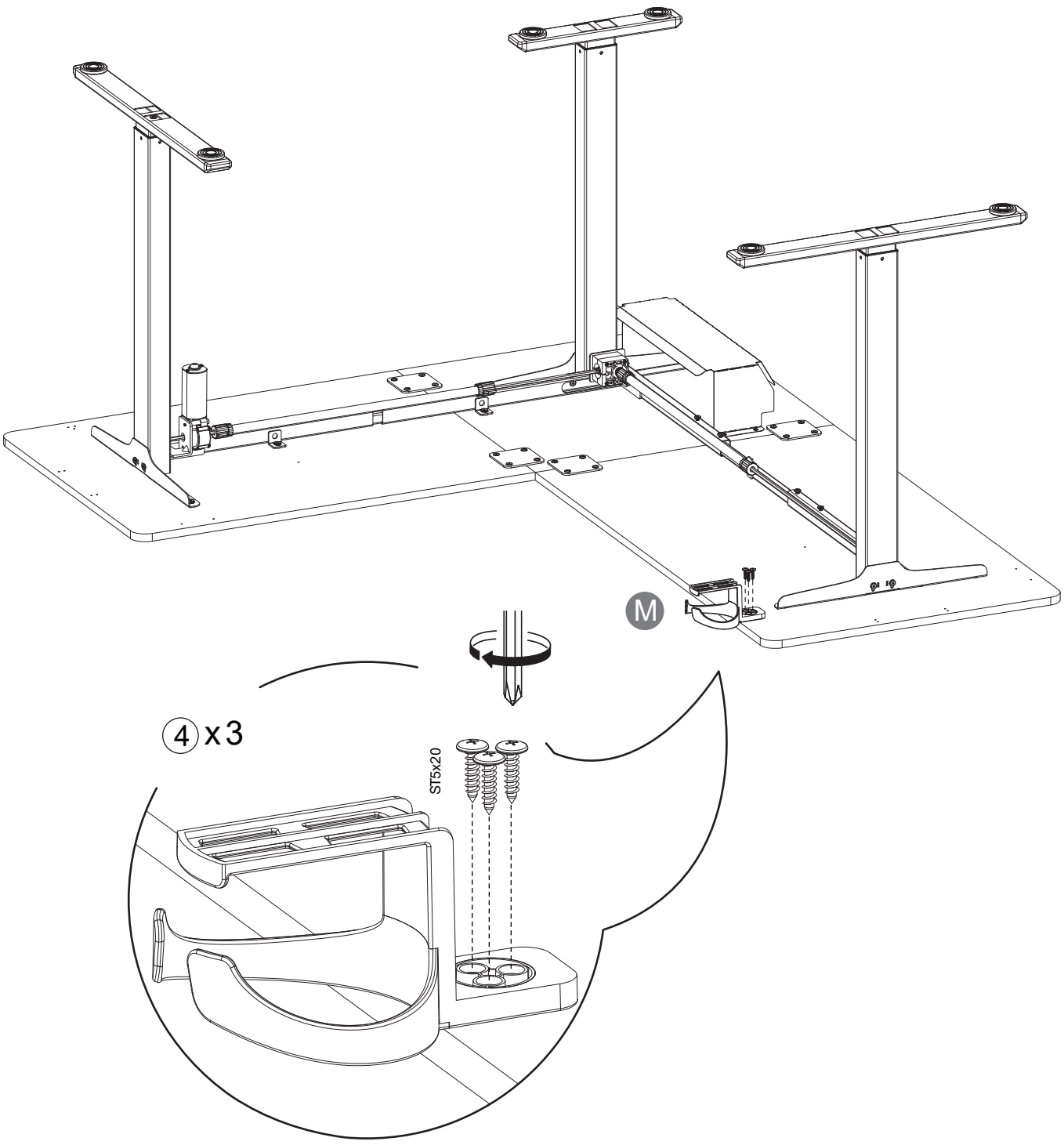

15

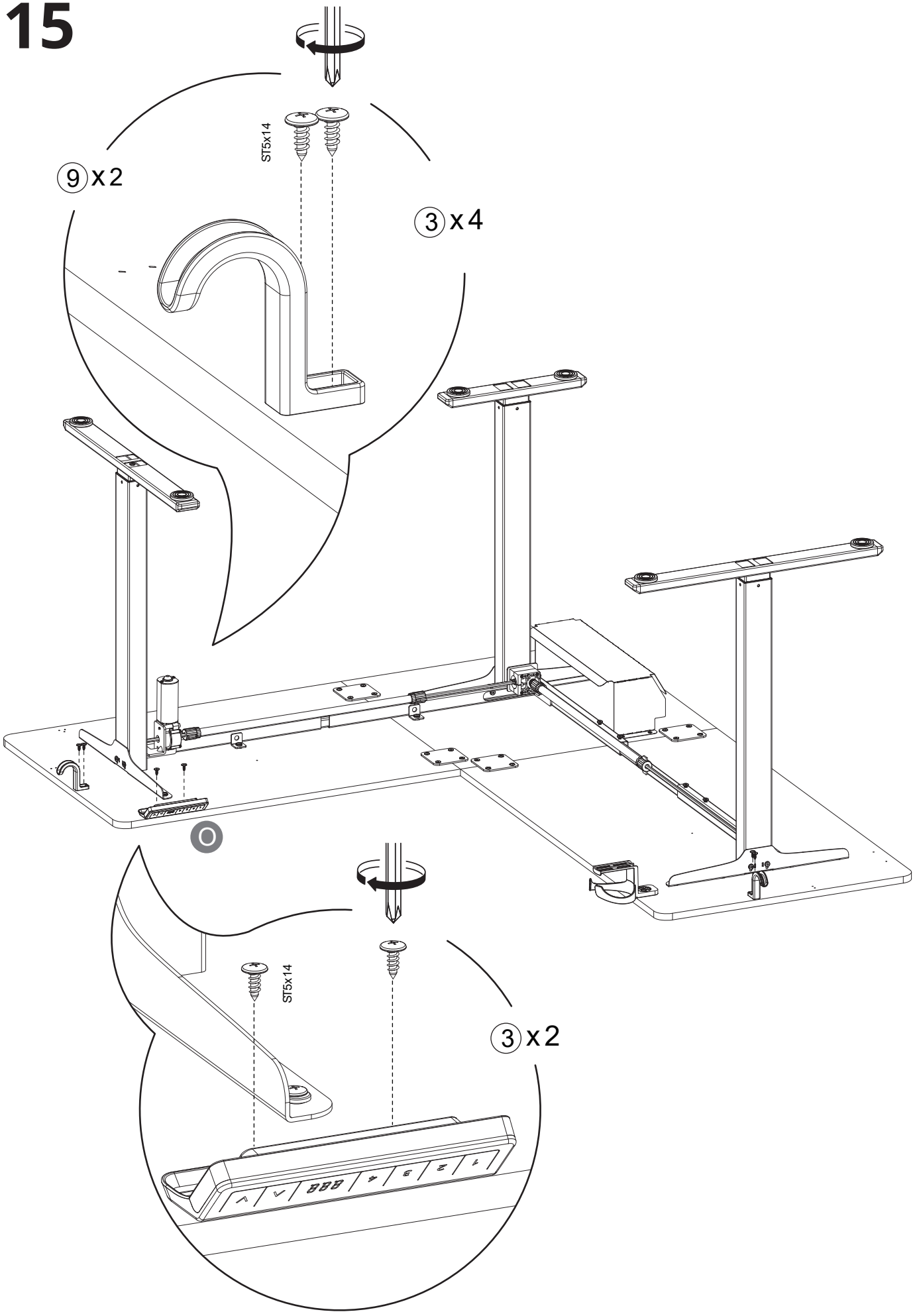

16

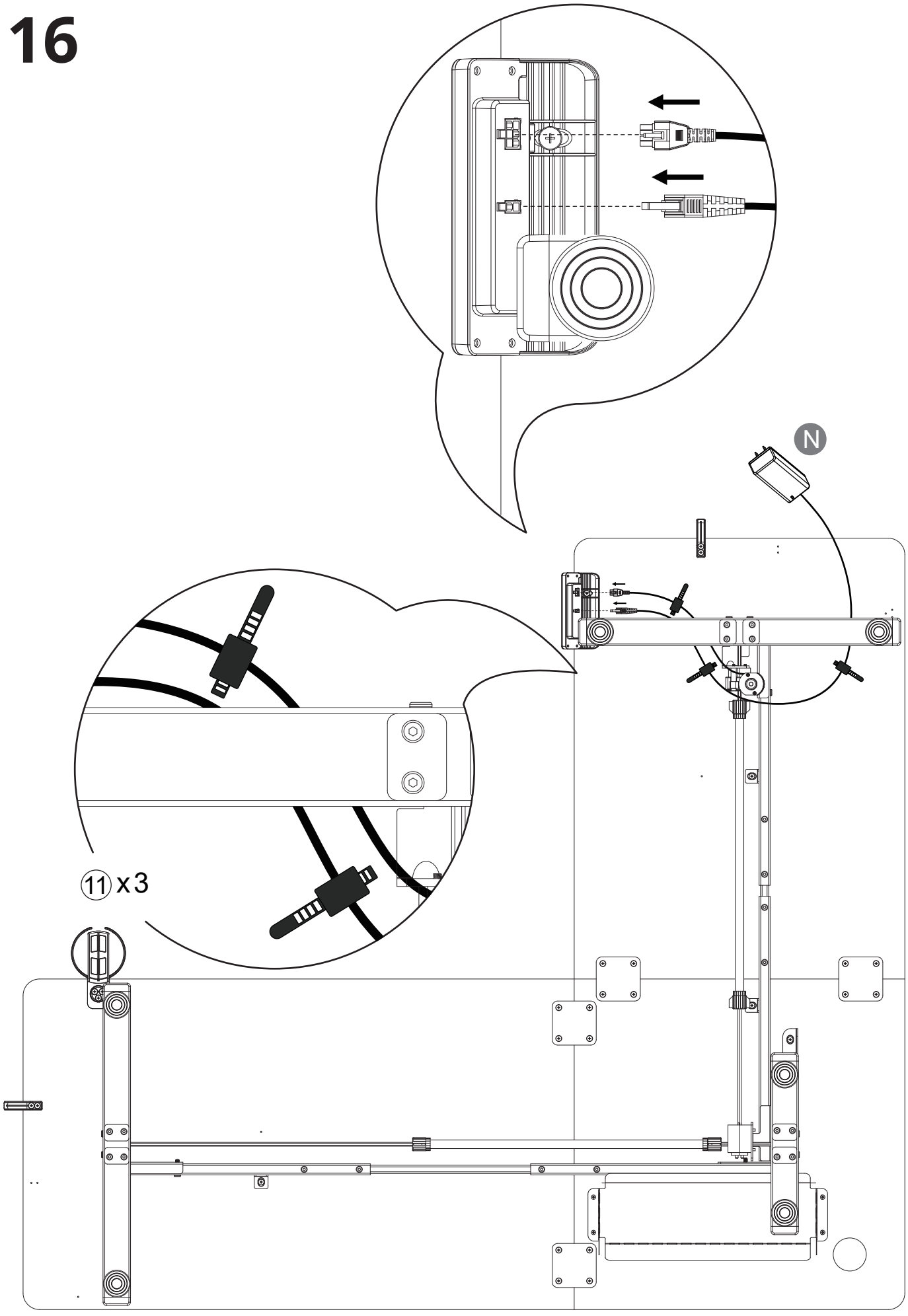

17

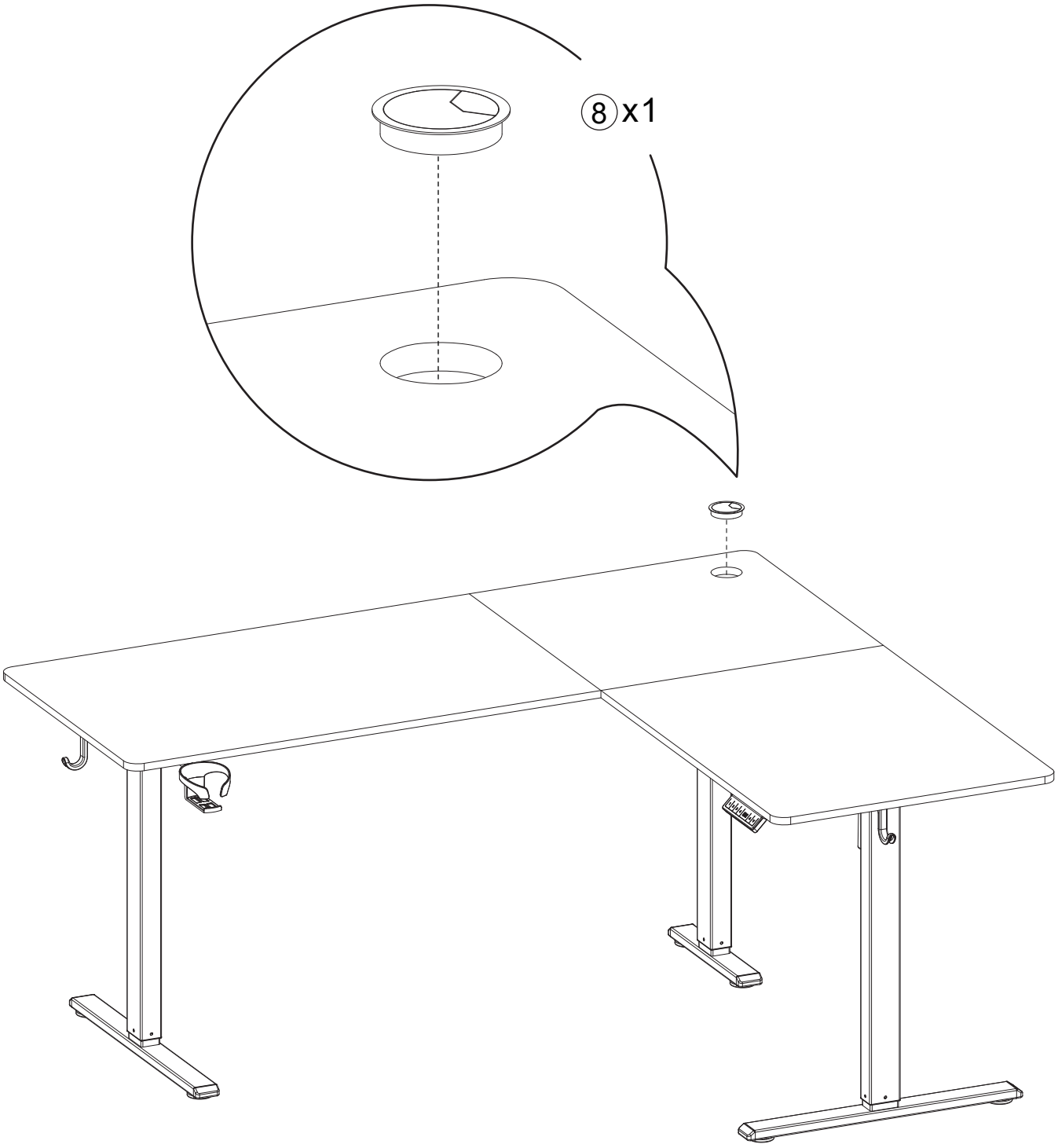

18

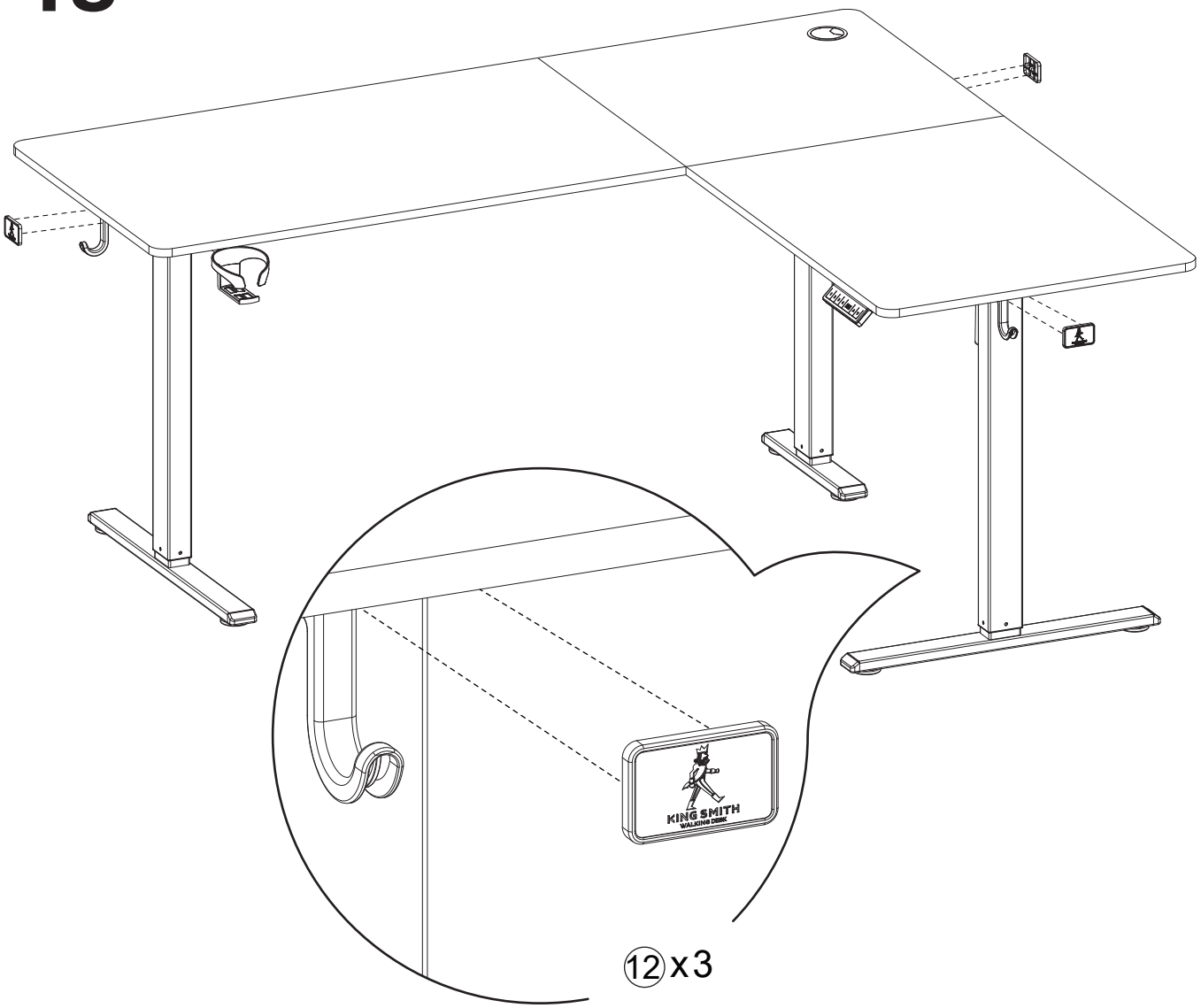

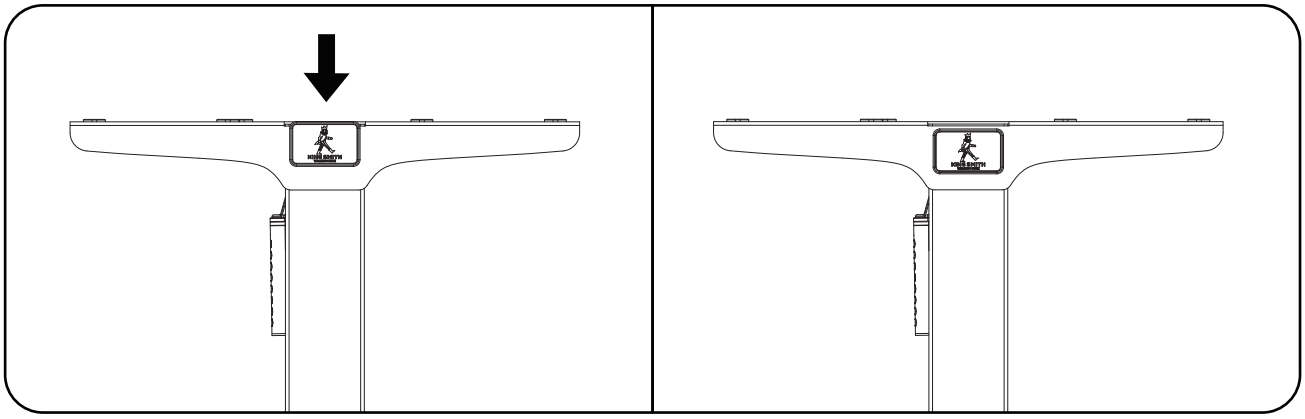

19 Before using "Force Reset"

After the installation is completed, press and hold down the downward key "﹀" until the digital tube displays "RST", and then the actual height is displayed, the reset is successful, and the operation is resumed.

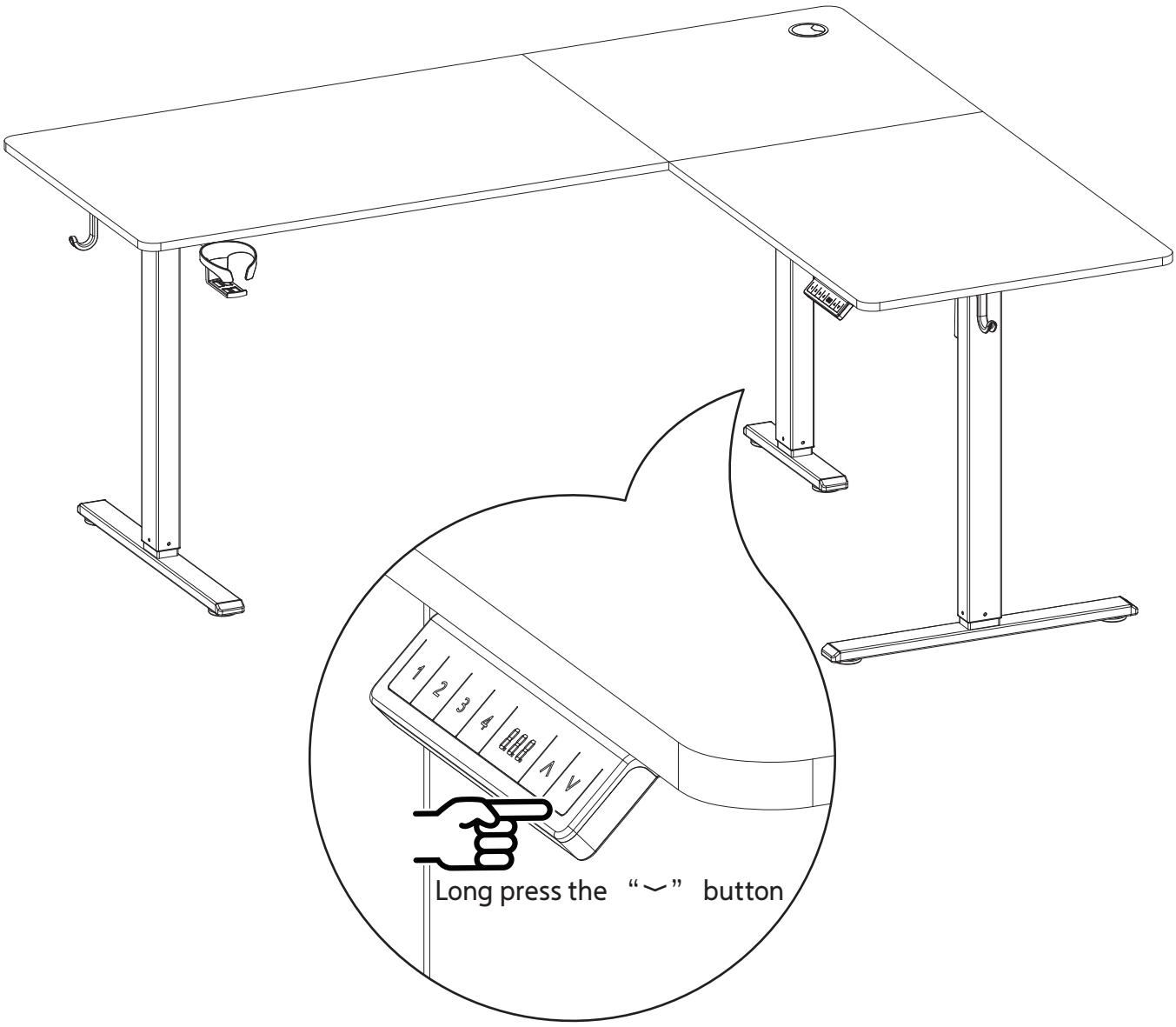

Installing a left-side desk

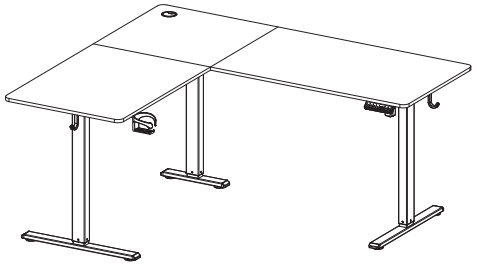

Note: installation steps 20–38.

20

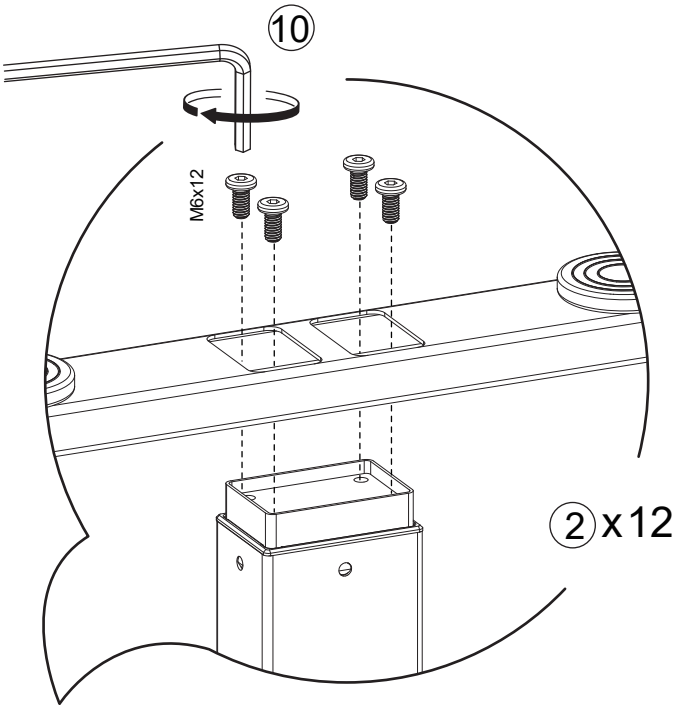

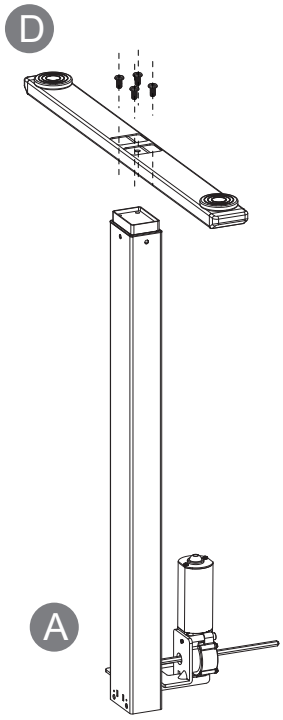

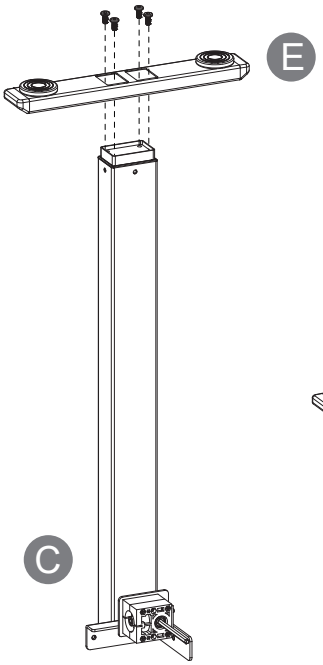

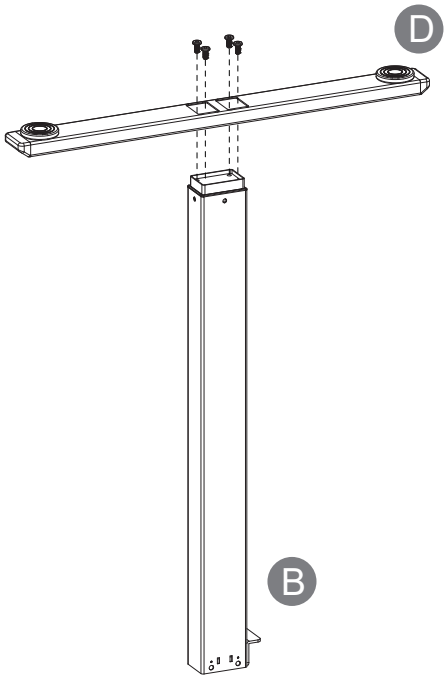

21 Two people are required to install it.

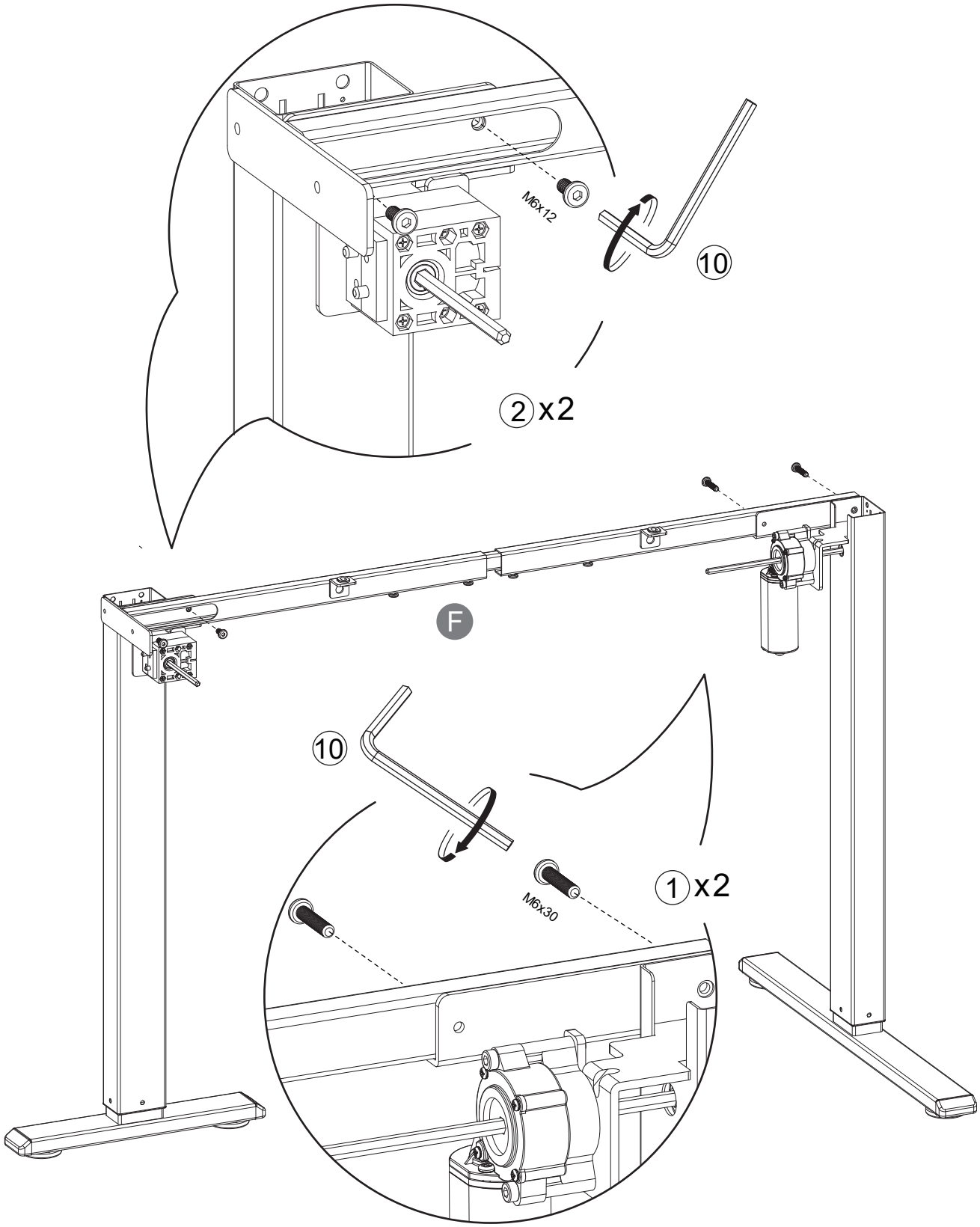

22

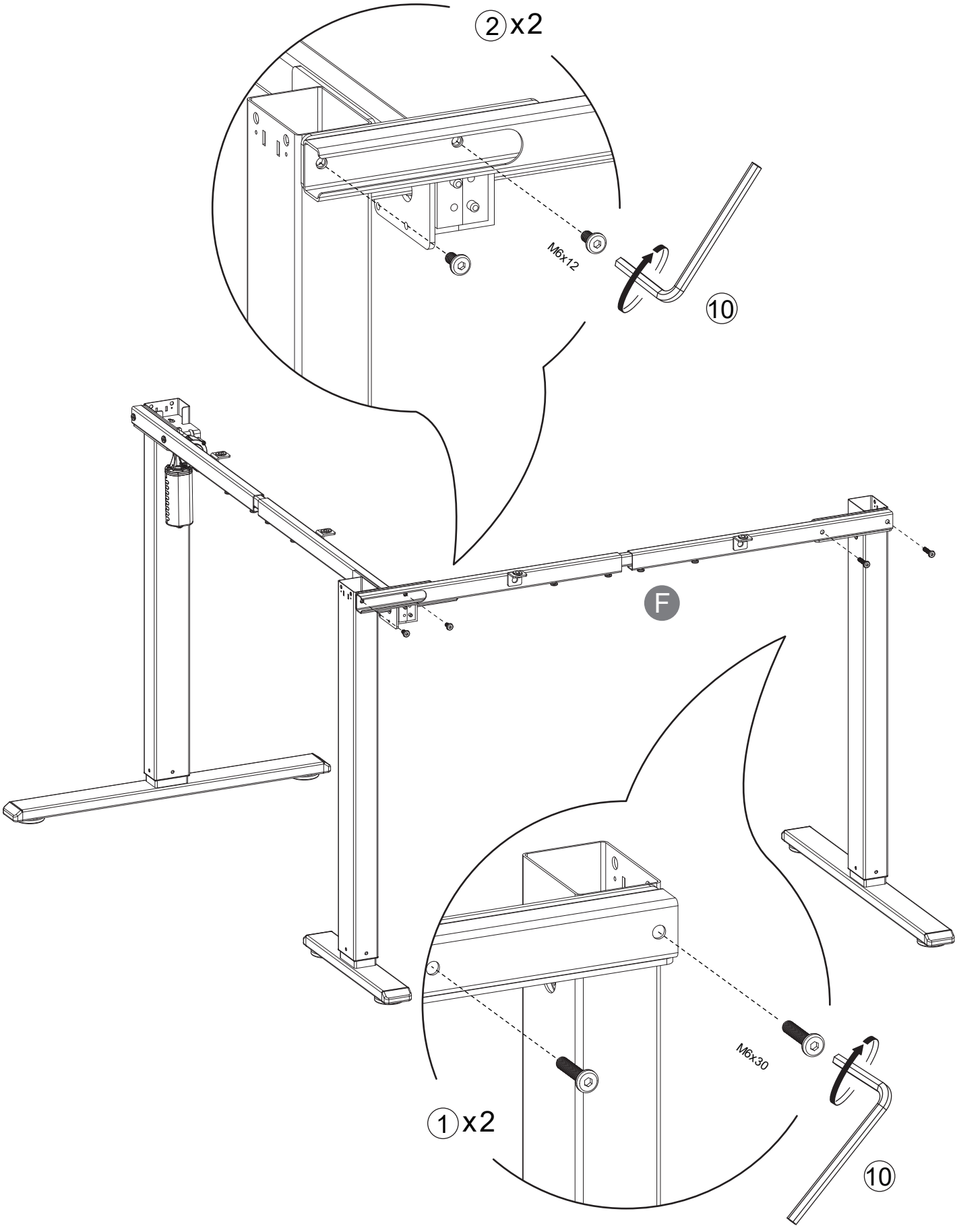

23

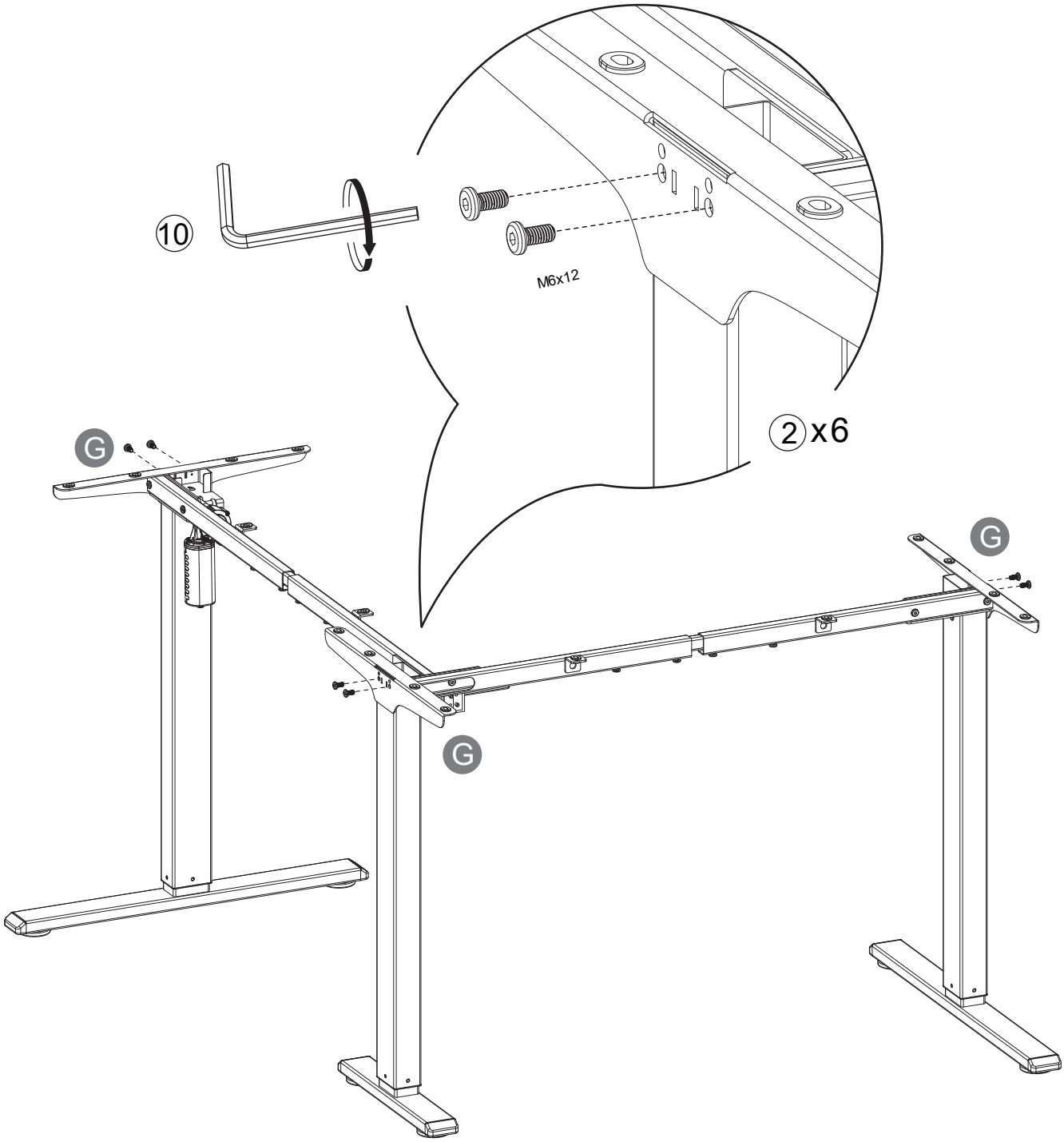

24

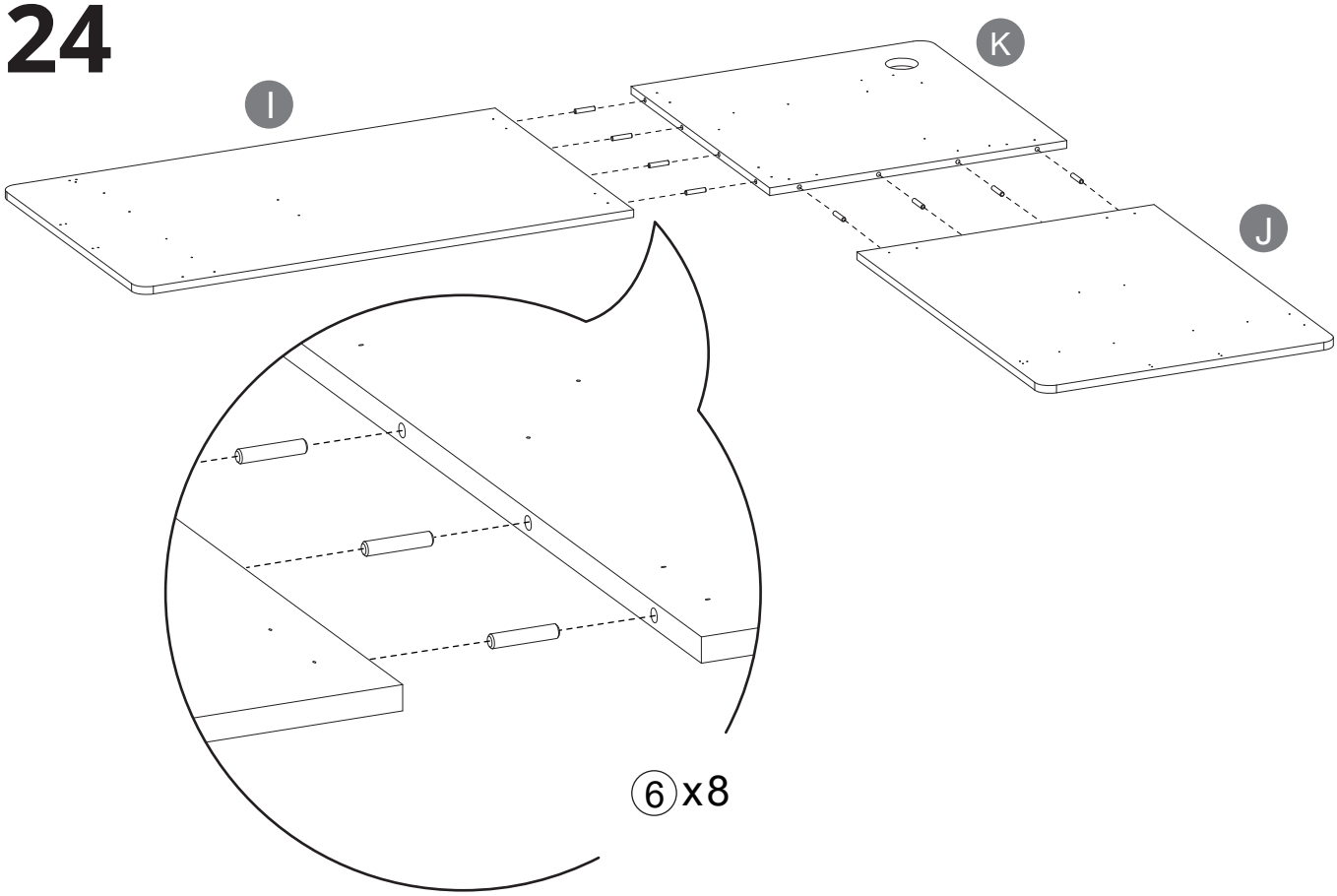

25

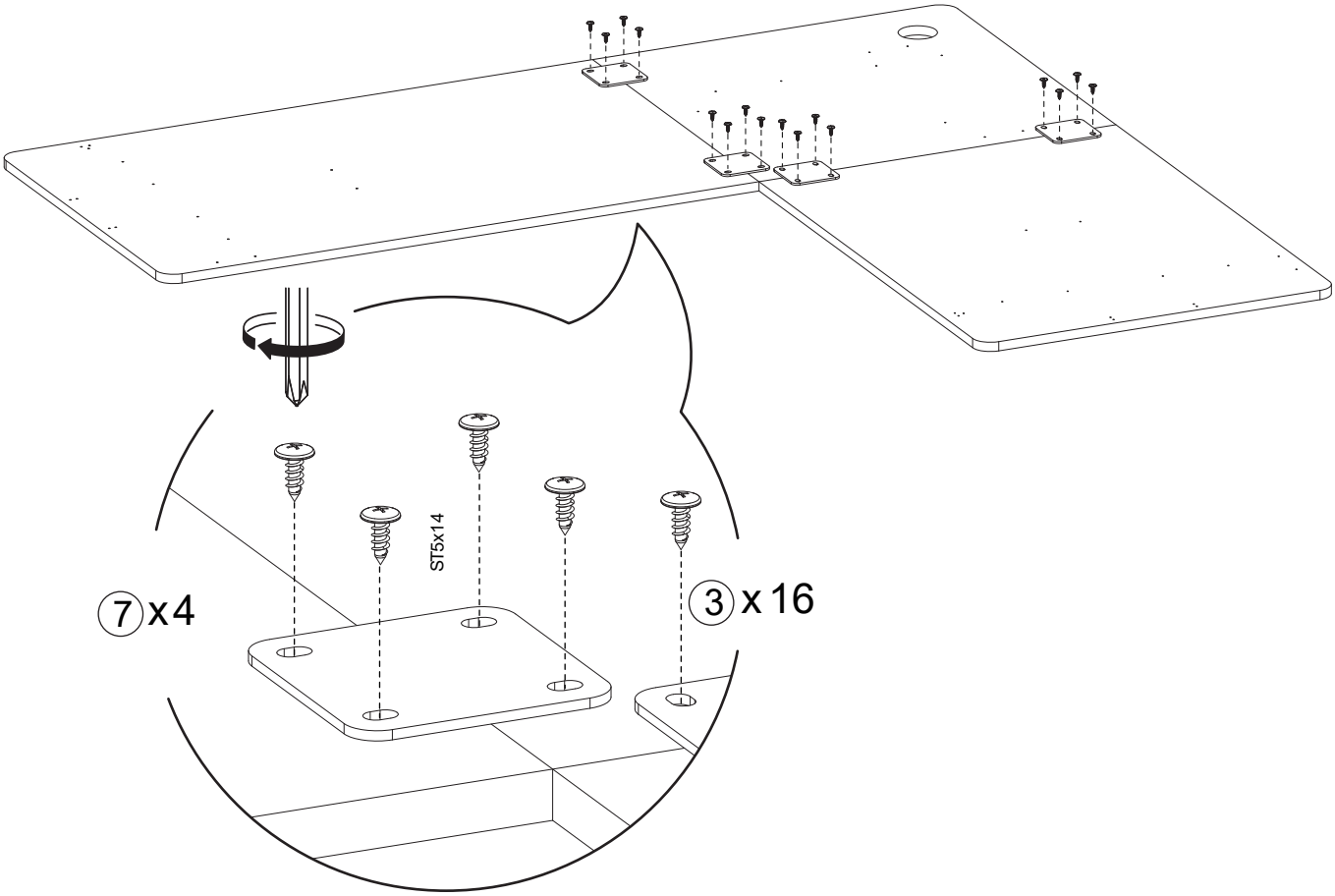

26 Loosen the screws and move the frame to adjust to the corresponding position.

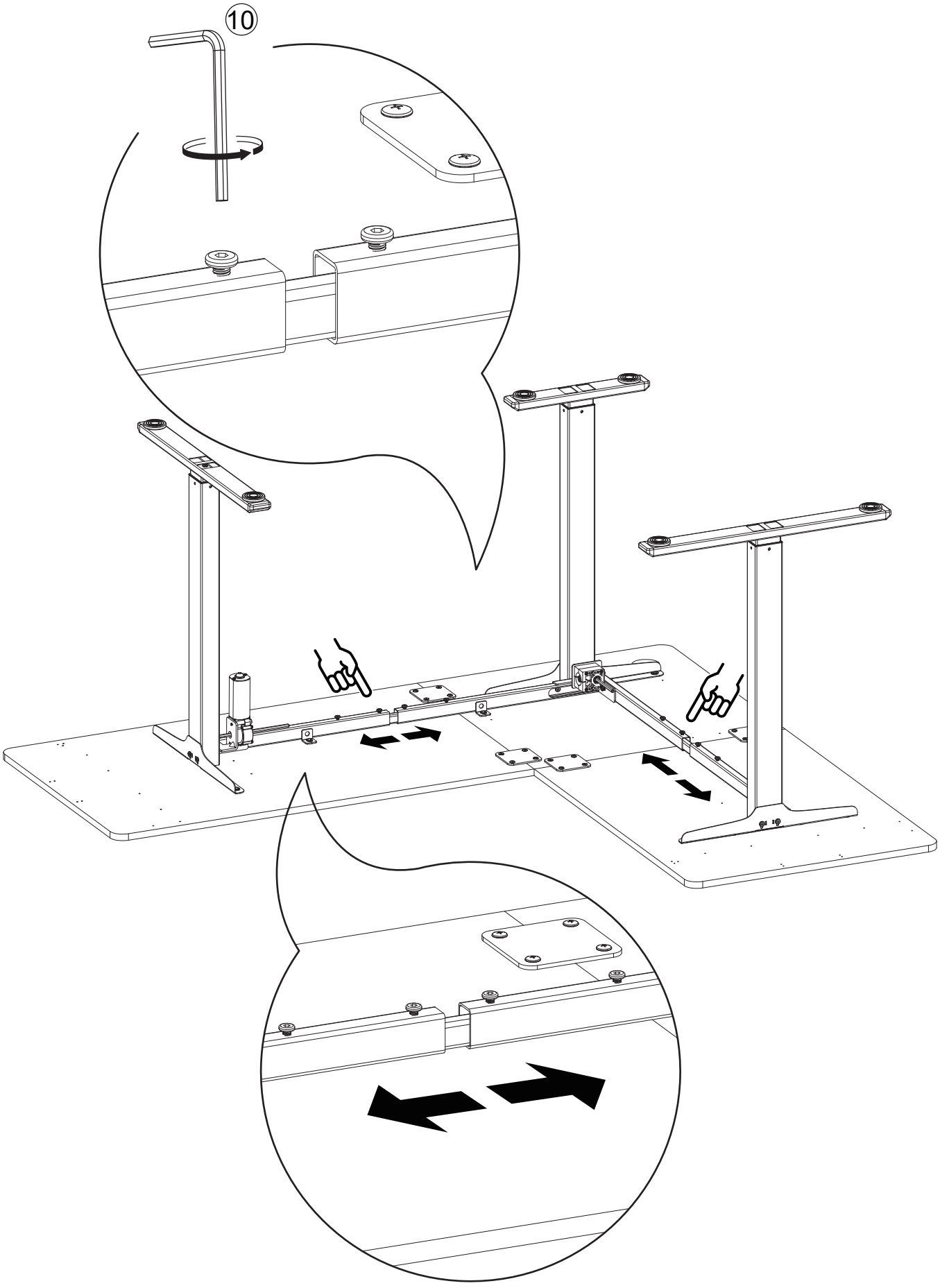

27

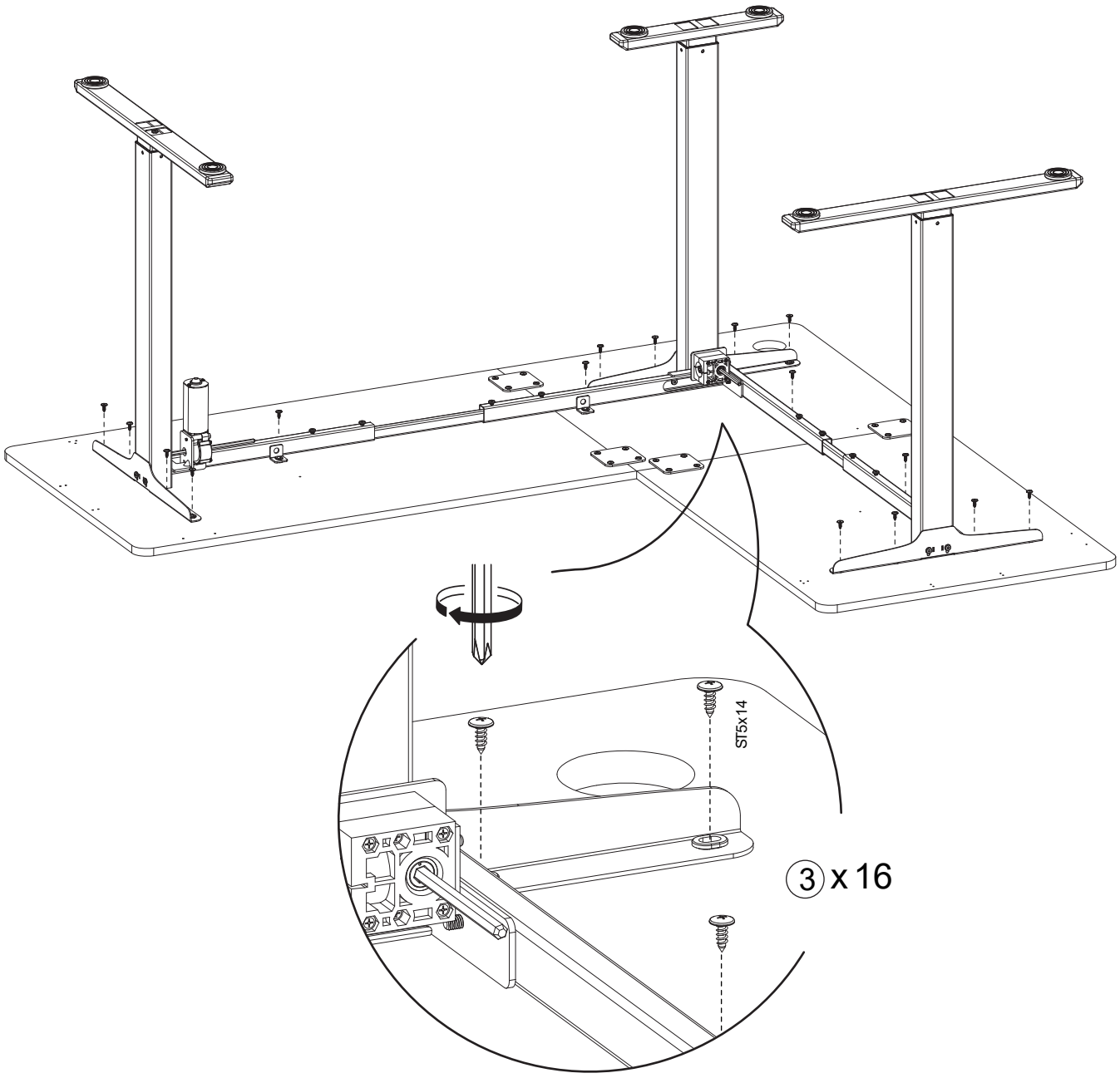

28

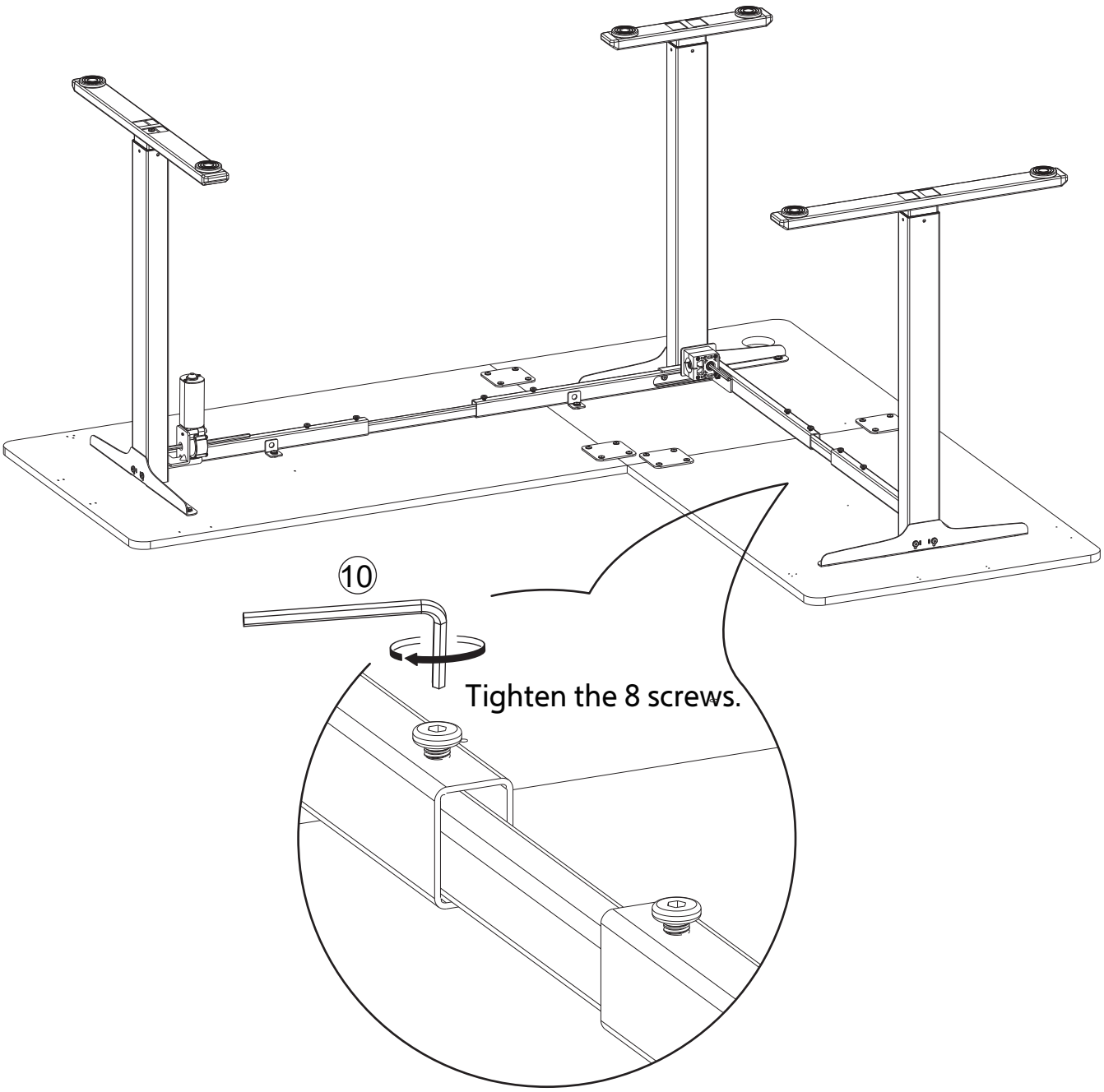

29

Note: Before installing the mechanical bearing, check that the column height is balanced and aligned.

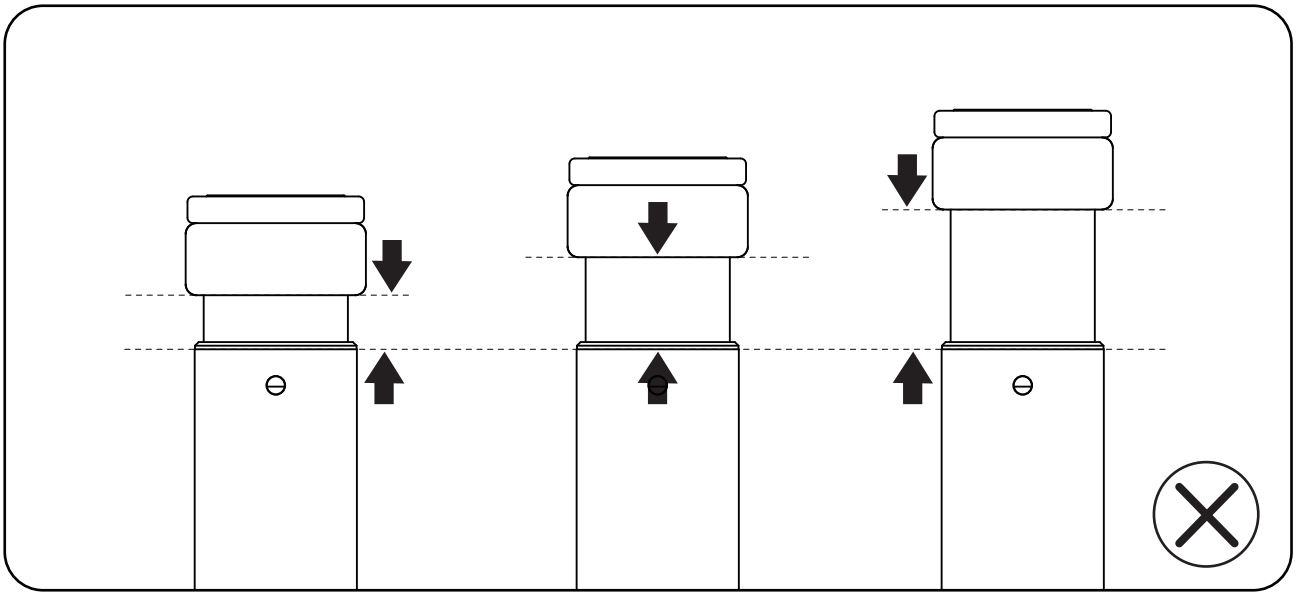

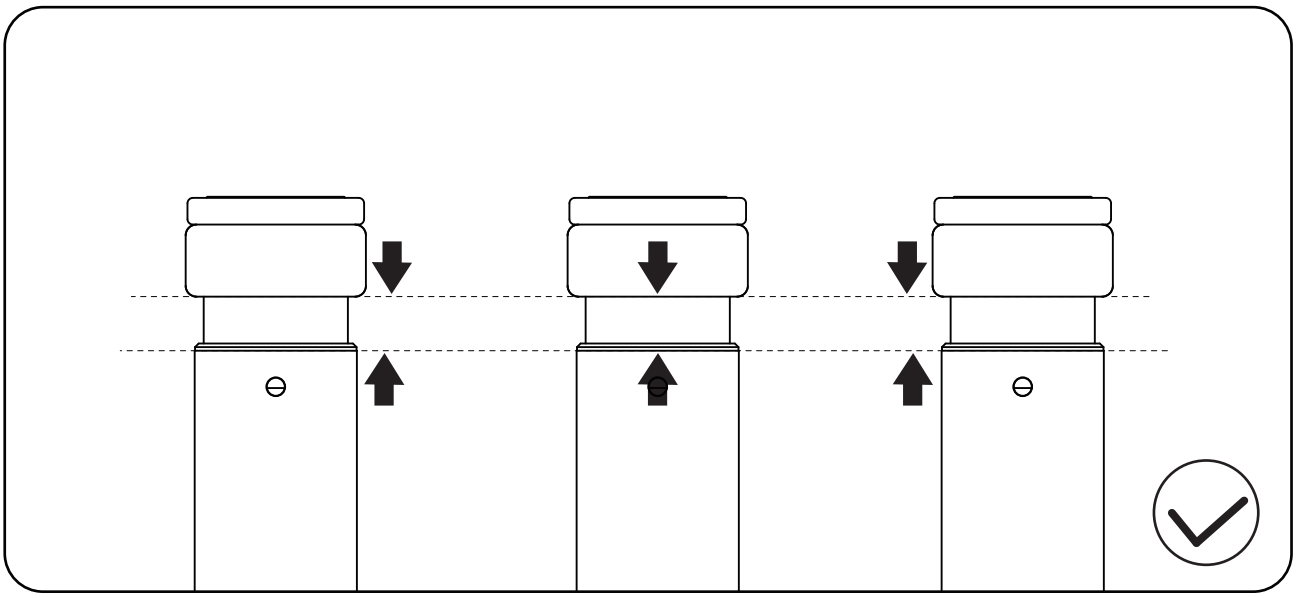

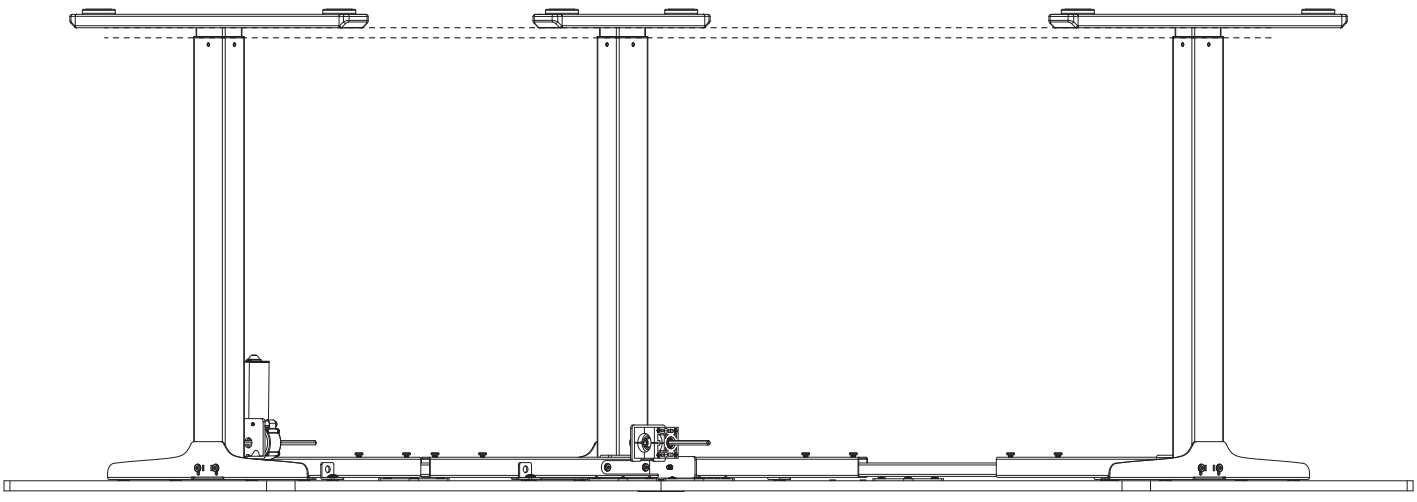

30

Before installing, loosen counterclockwise.

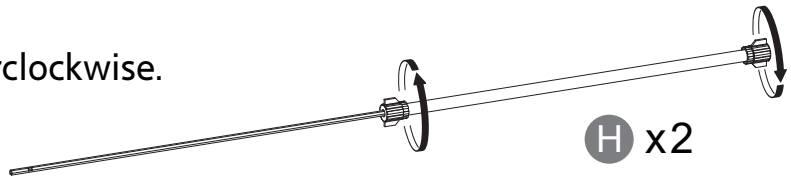

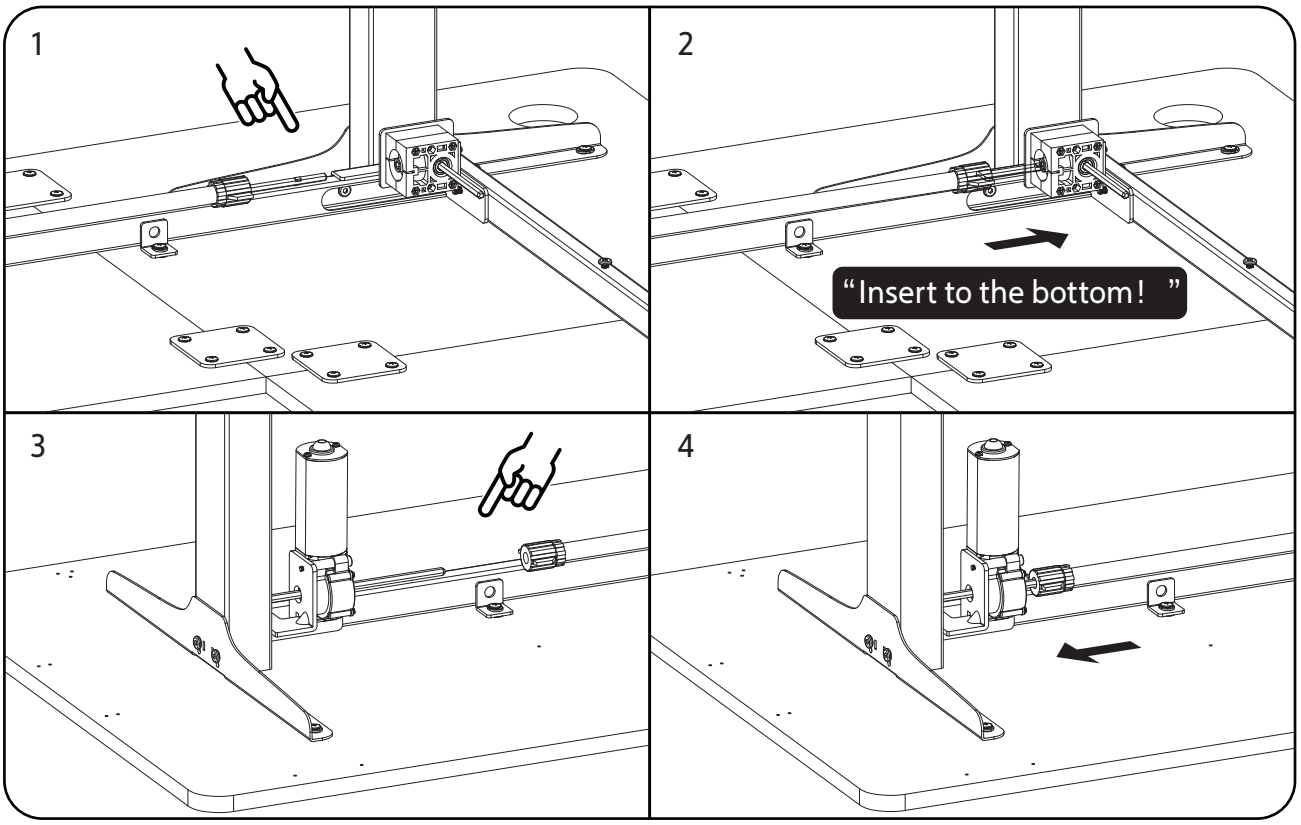

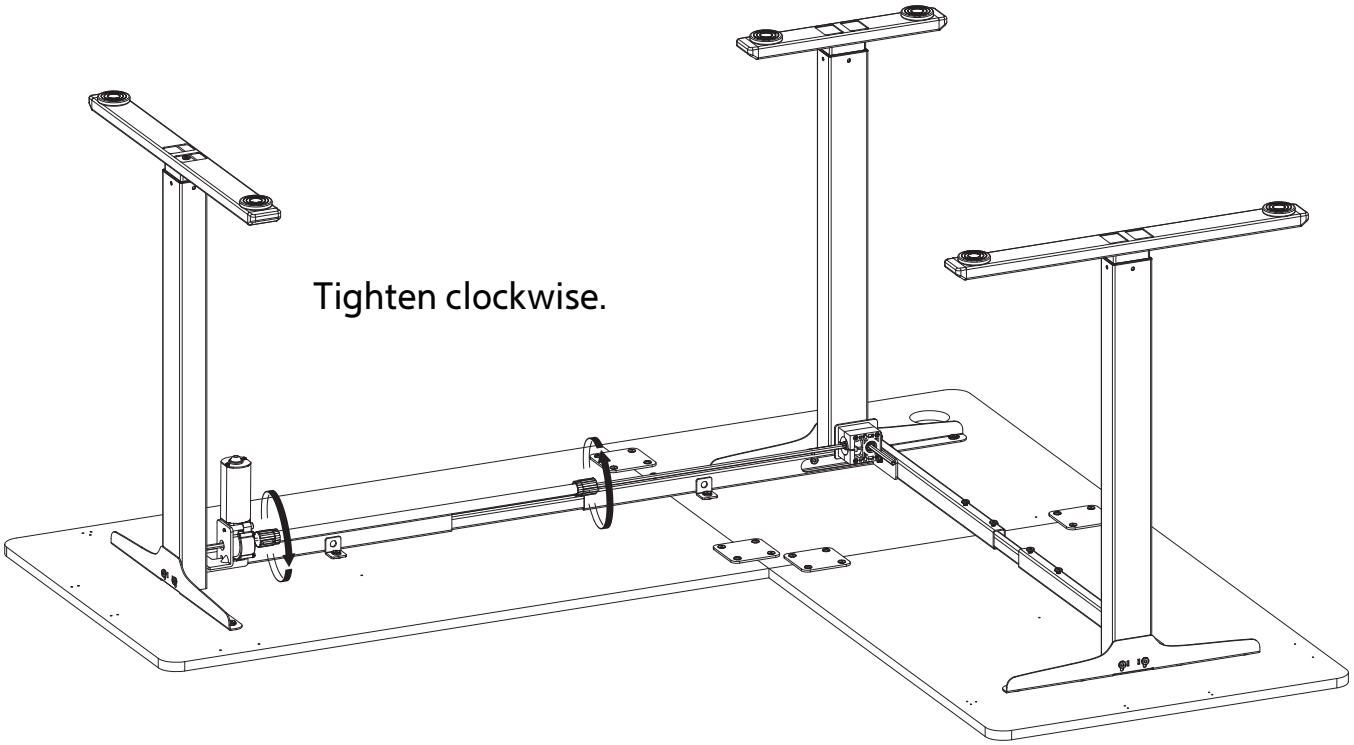

31

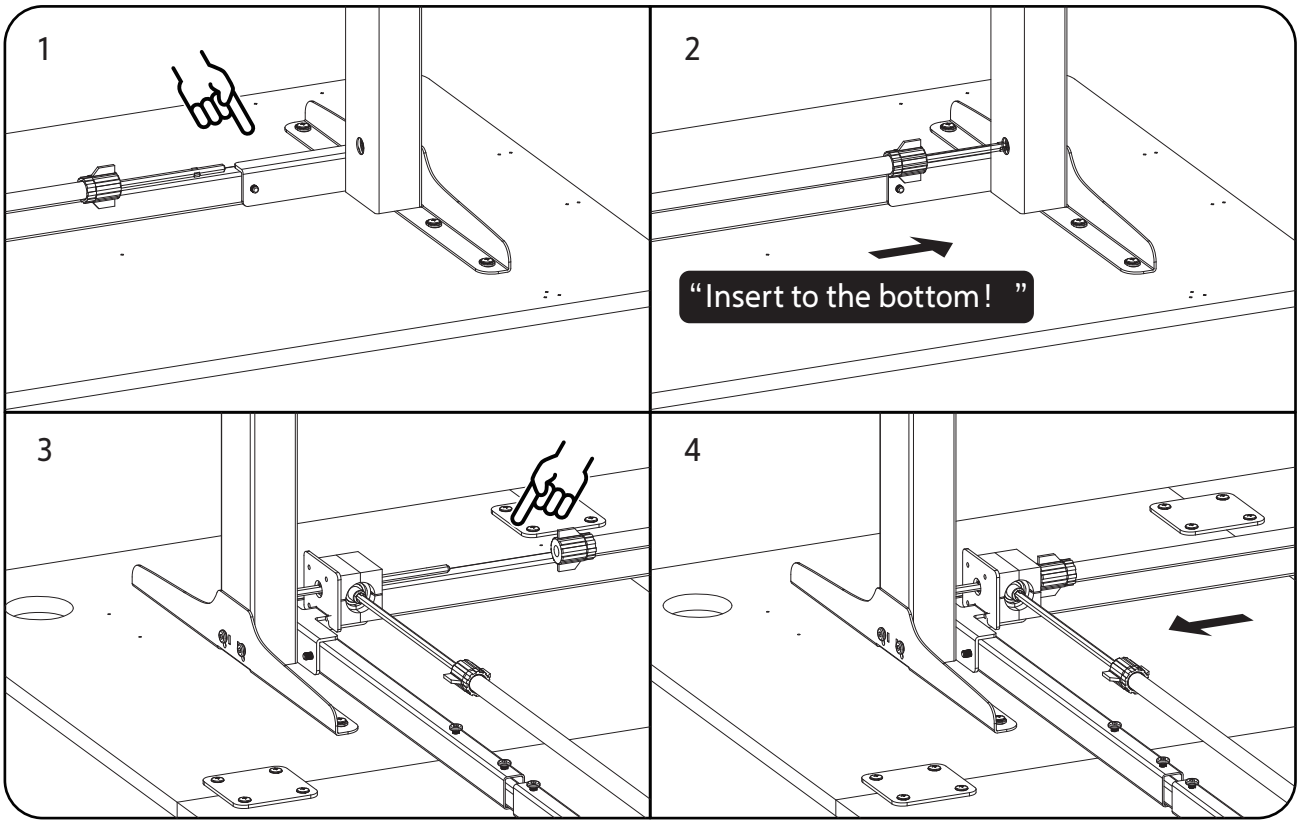

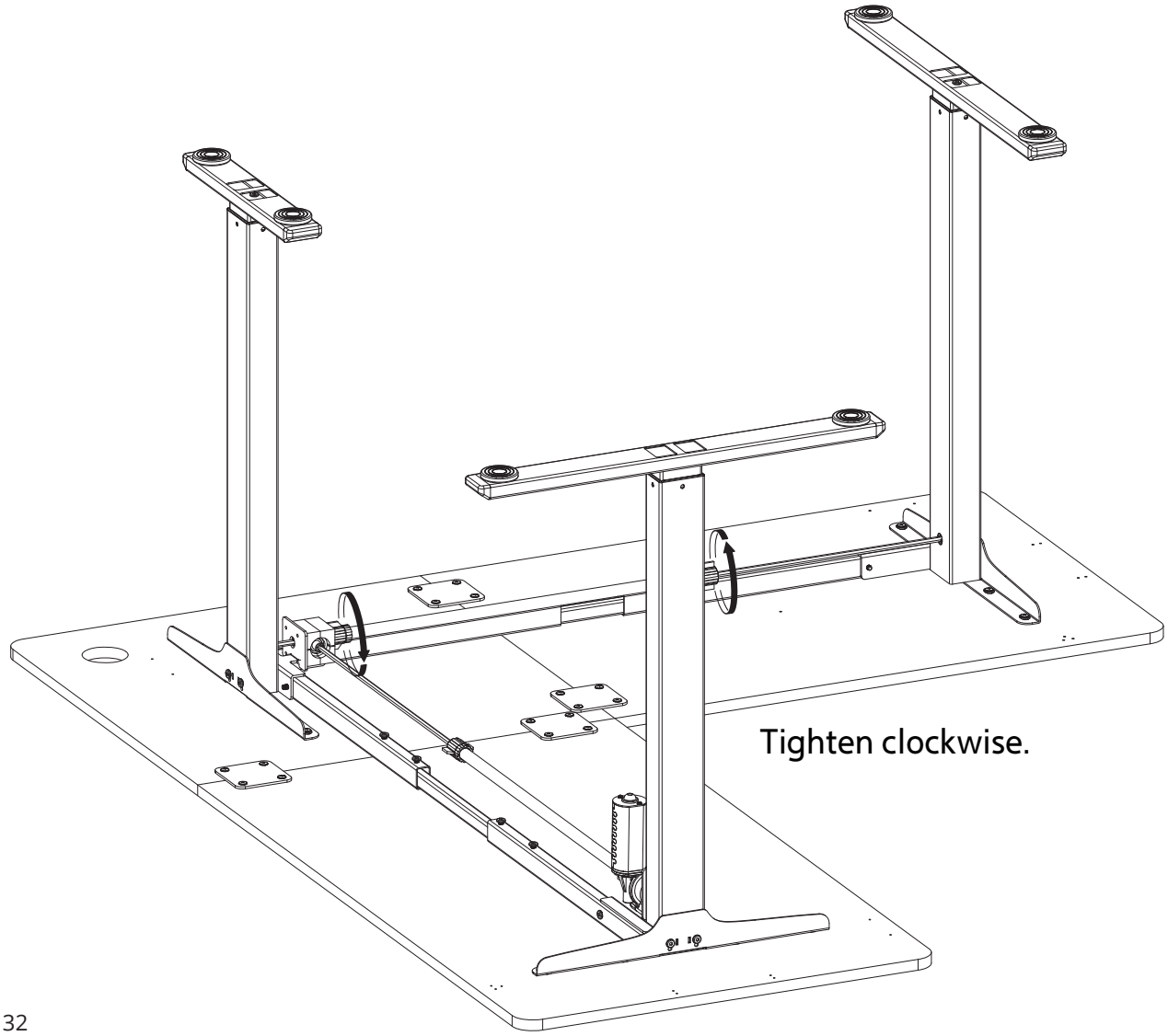

32

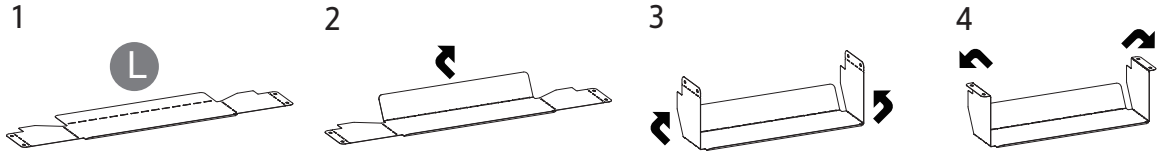

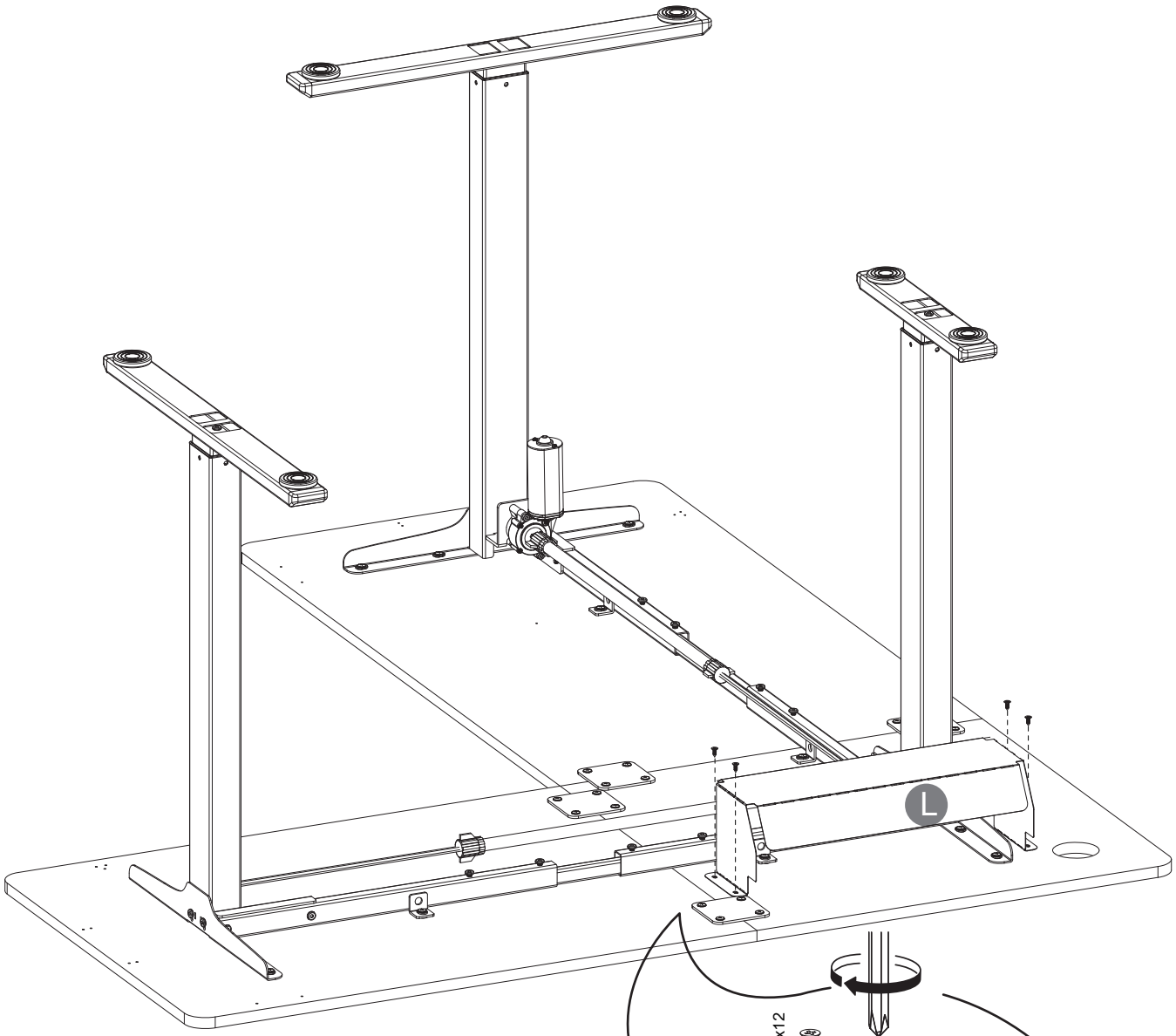

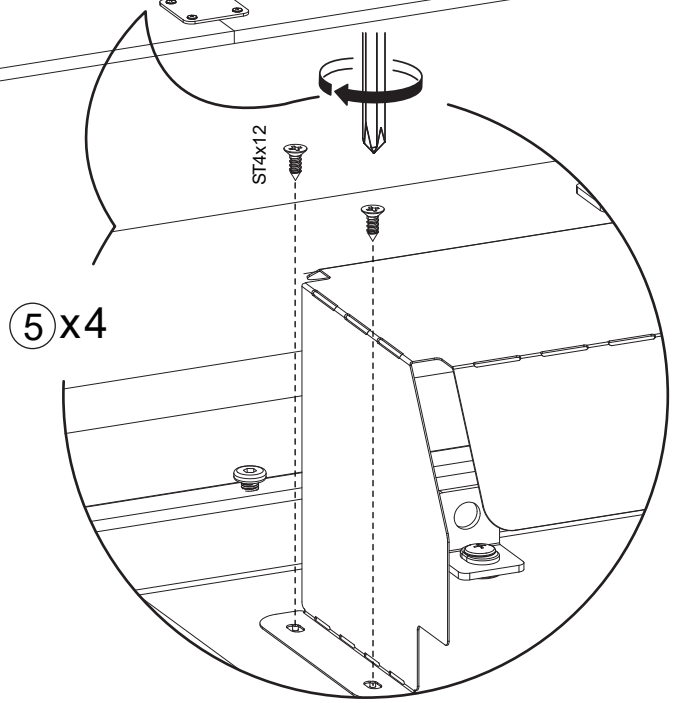

33

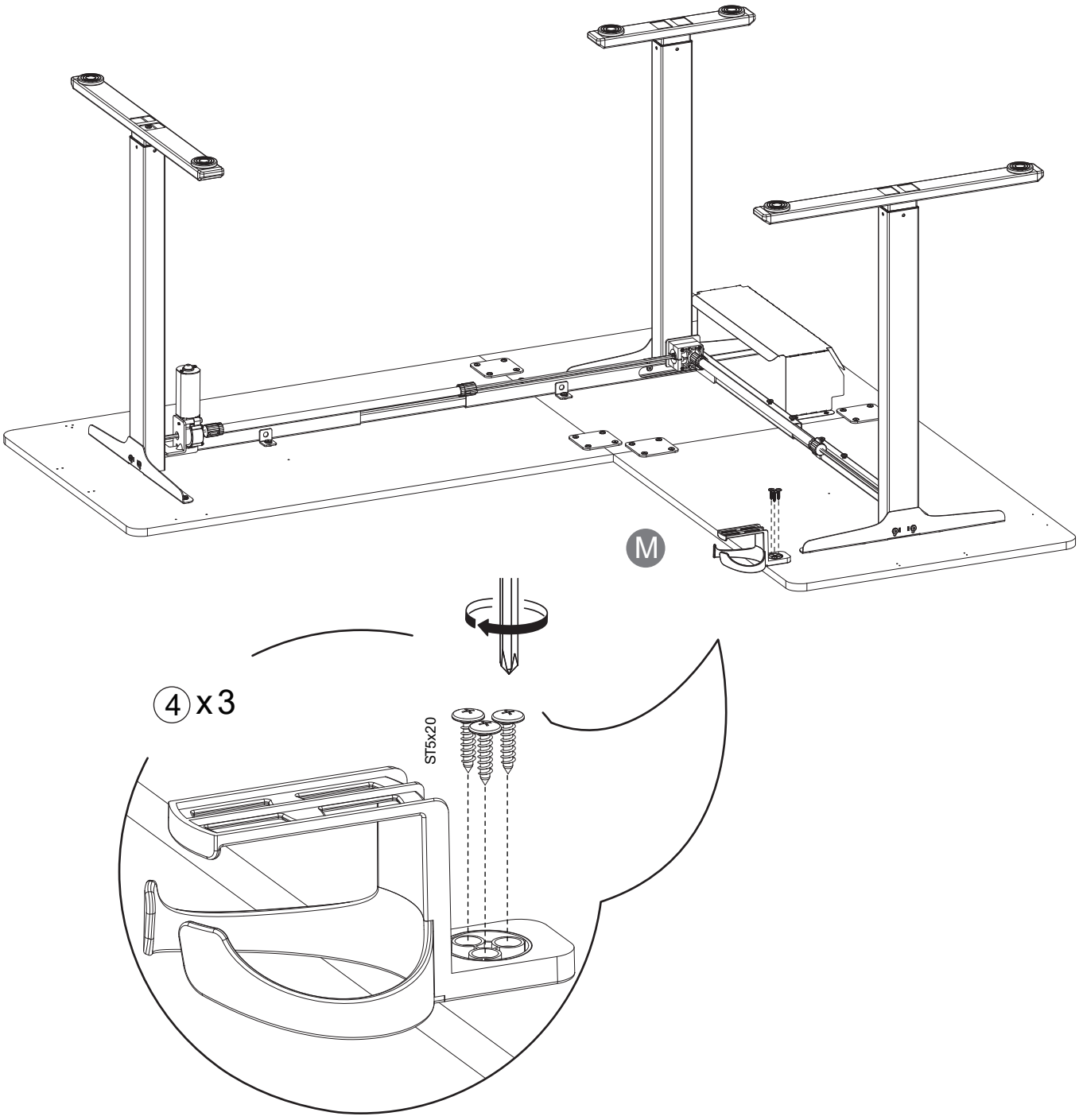

34

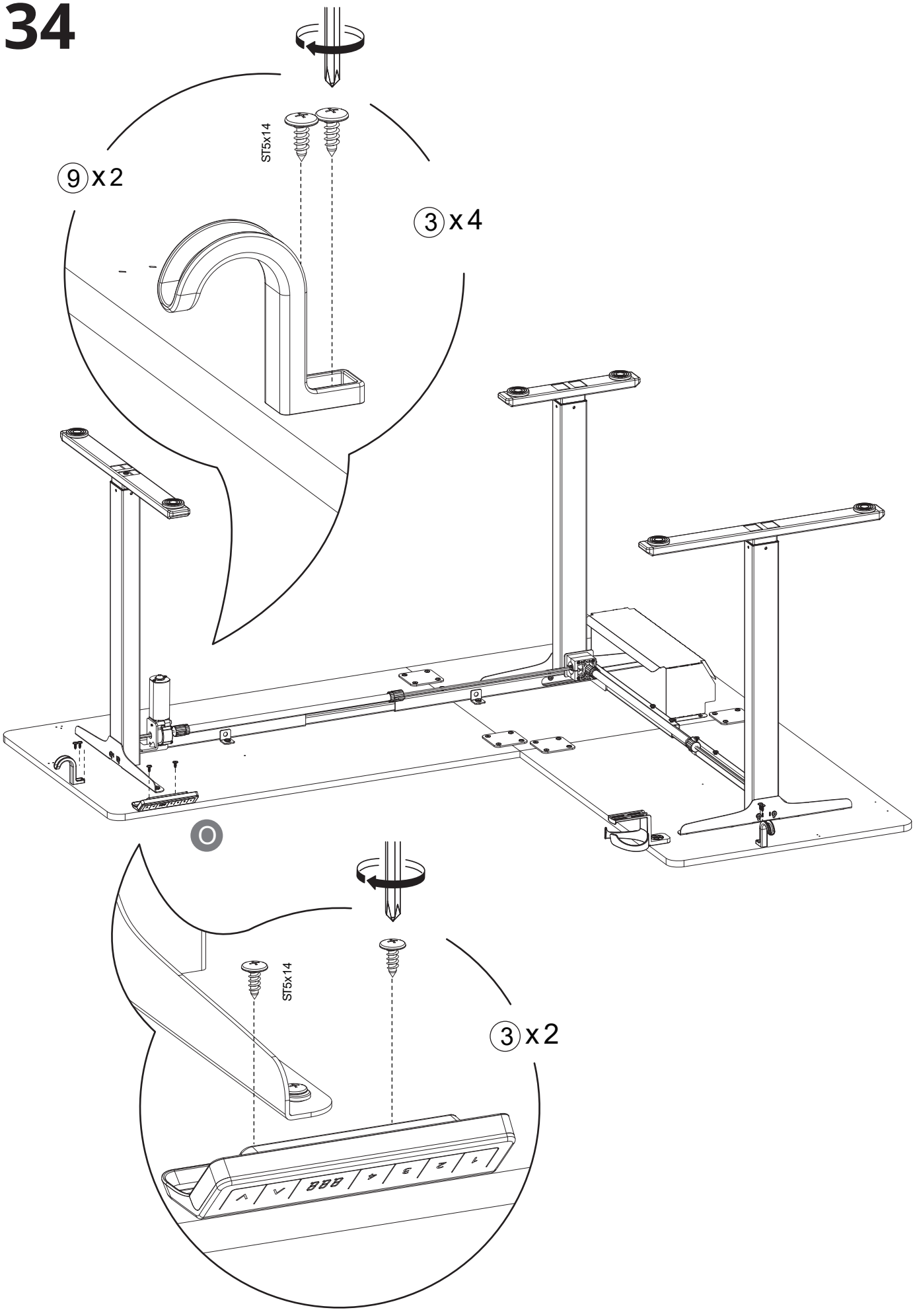

35

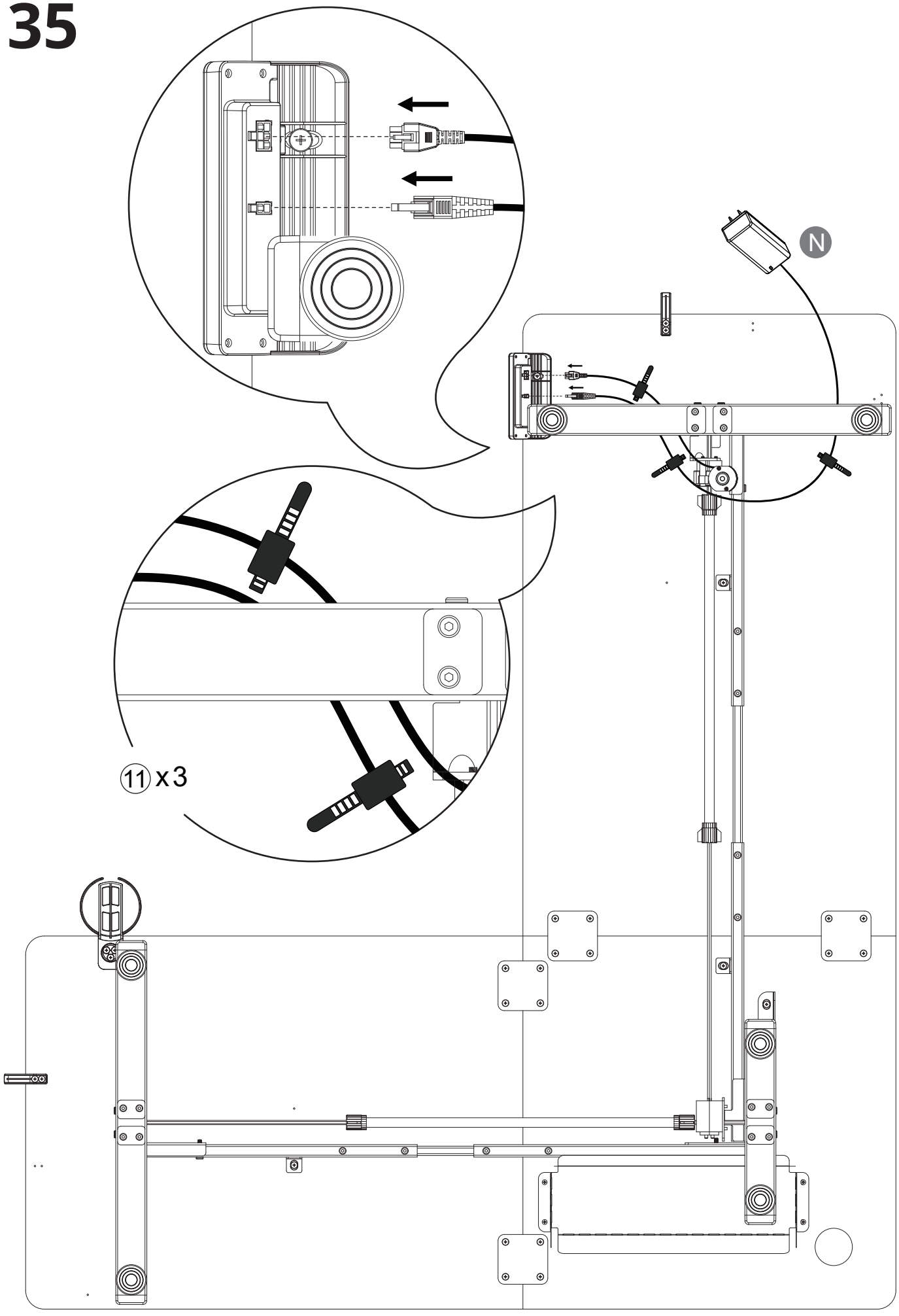

36

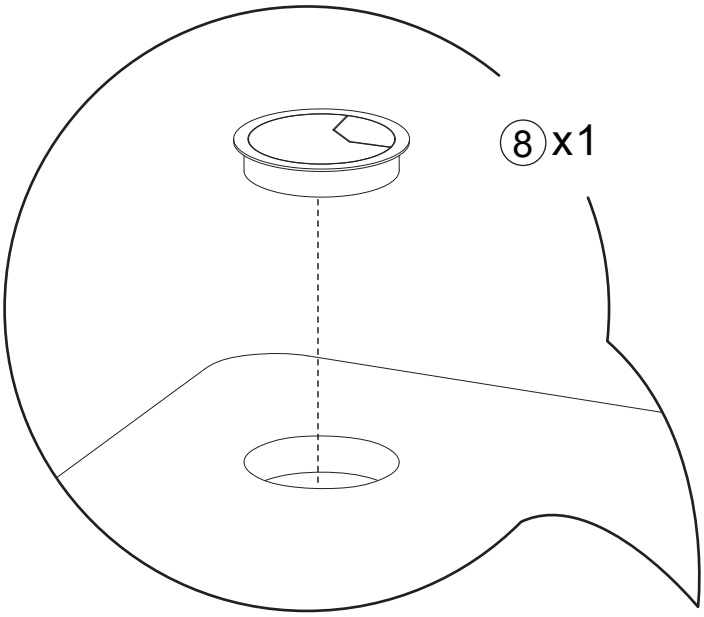

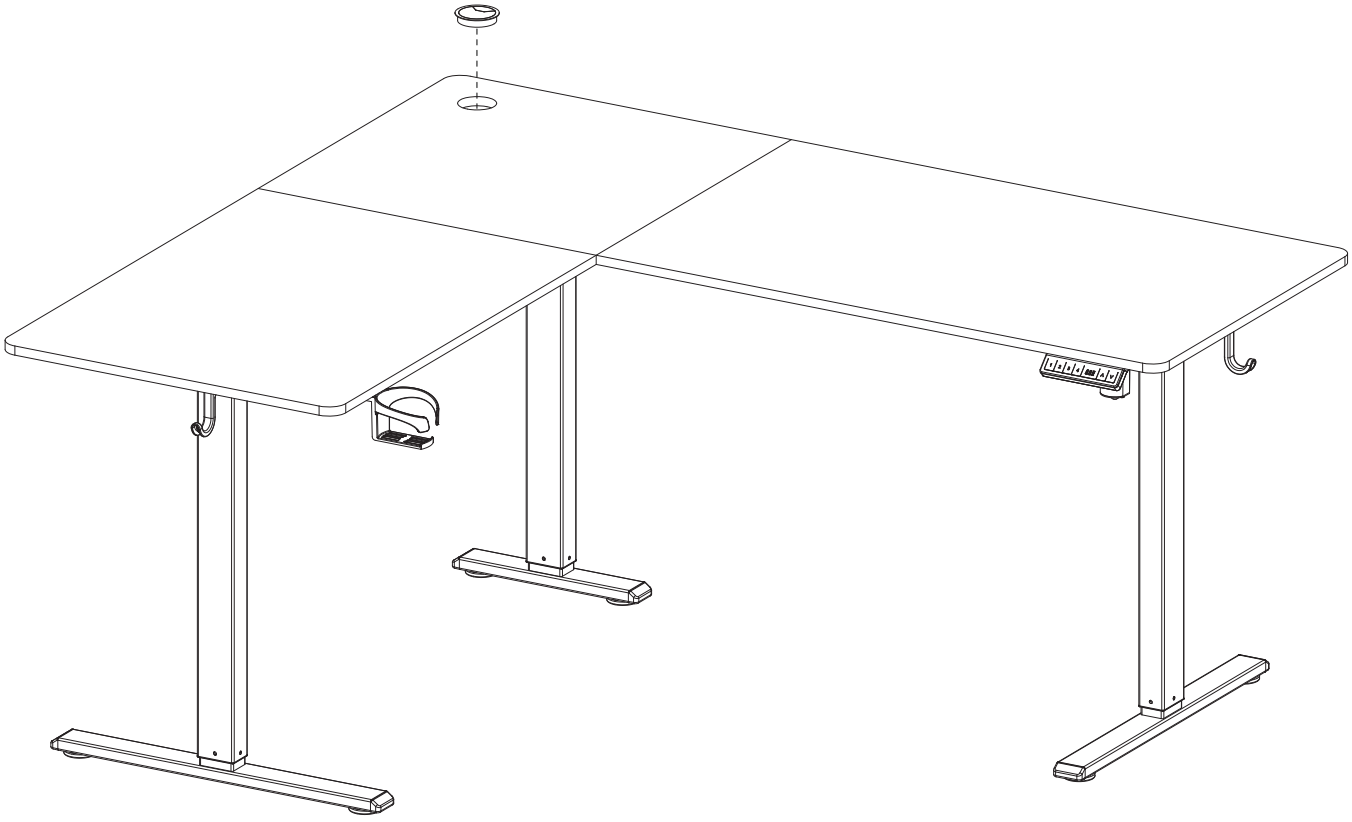

37

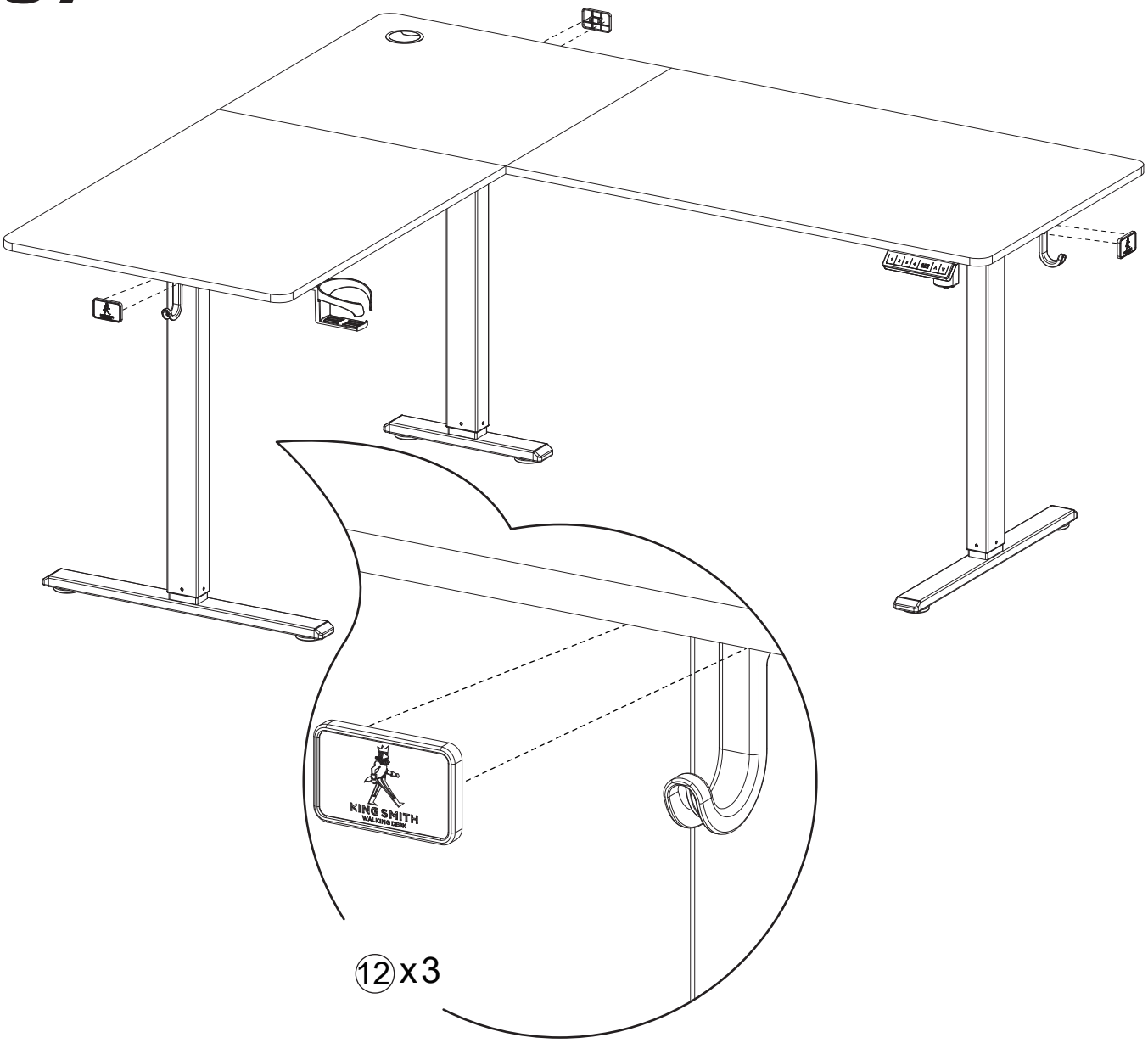

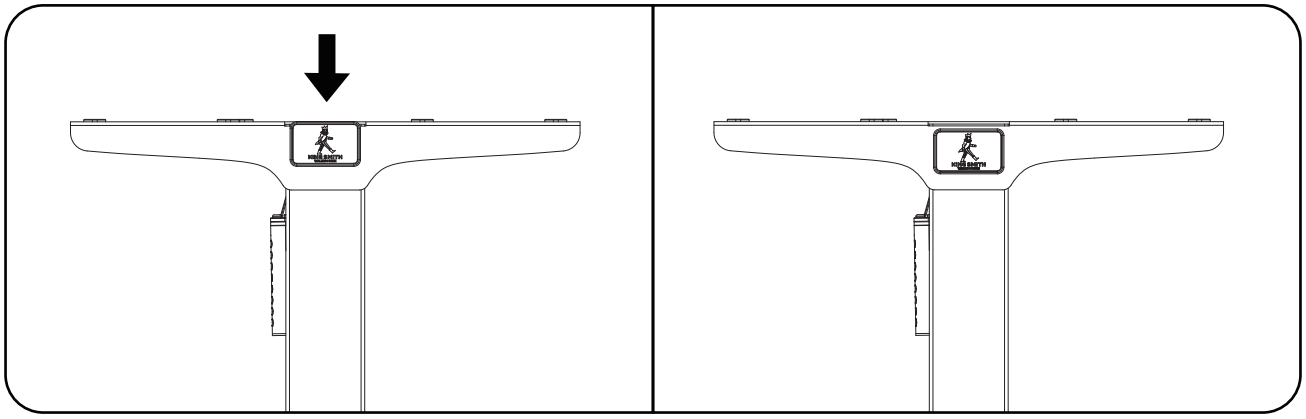

38 Before using "Force Reset"

After the installation is completed, press and hold down the downward key "﹀" until the digital tube displays "RST", and then the actual height is displayed, the reset is successful, and the operation is resumed.

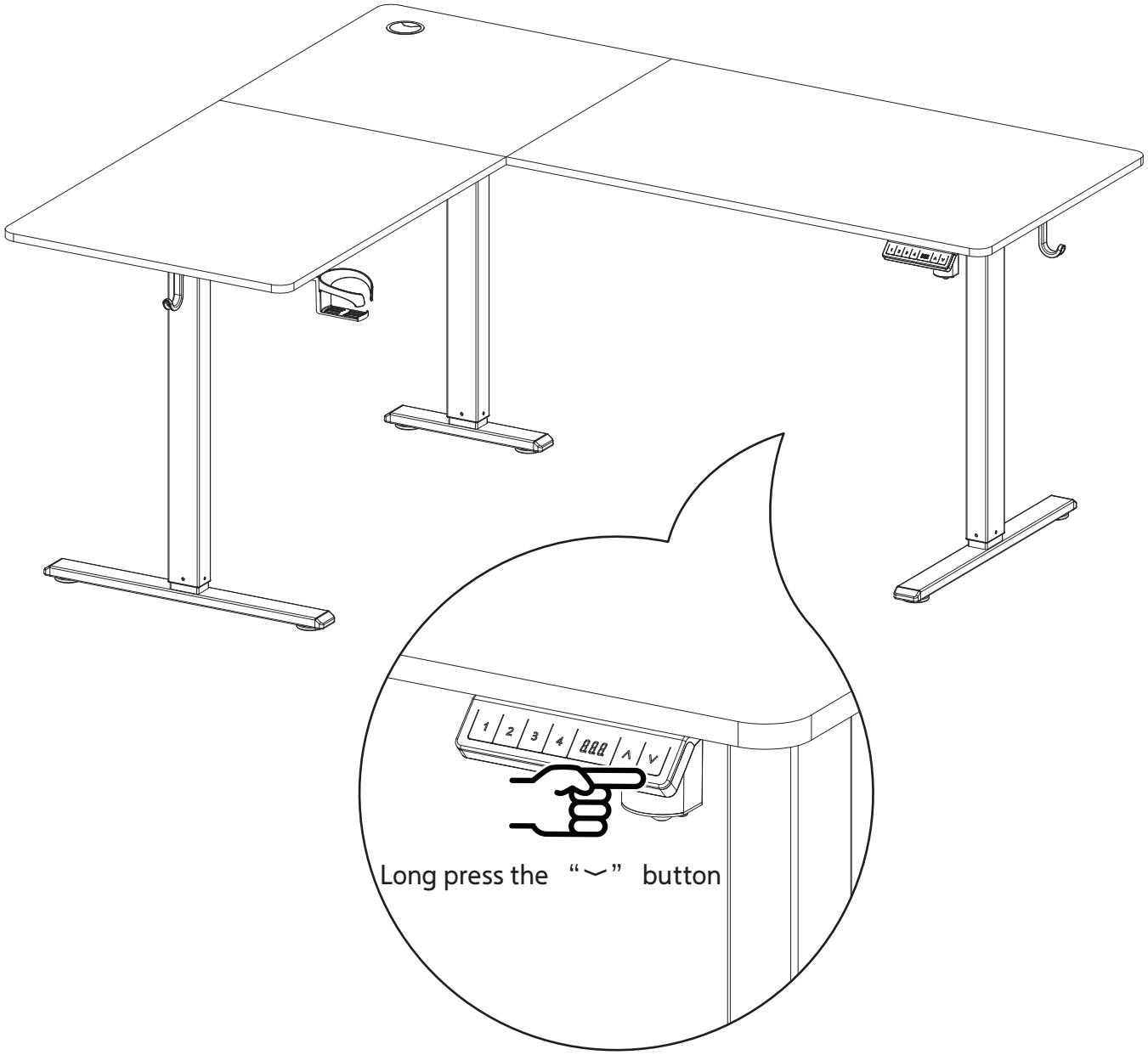

Operation instruction

1.1. Memory operation

1.1.1 Set the memory point

Long press each number key “ 1 , 2 , 3 , 4 ” for 2 seconds, and the digital display will show S−1, S−2, S−3, S−4. Then it will remember that the current display height reaches the corresponding button position.

1.1.2 Going the memory point

Press the different number button , 1 , 2 , 3 , 4 , then it will go to the pre−setting memory height.

1.2 Reset operation

After restarting power each time, it's the necessary step to force reset: Press and hold down the downward key "﹀" until the digital tube displays "RST", after that actual height is displayed, which means reset finishes. Then you can enjoy using our desk normally.

1.3 Height unit switch operation

Press the “ 3 + 4 ” buttons together for 5 seconds, display “IH” or “CN”.

Code descripiton

Code	Descripiton	Solve method
ER1	Motor hall signal breakdown or motor breakdown reasons: The motor terminal is not connected	1. Check the motor terminal is connected properly 2. Check the circuit connection of the motor
OL	Overload reasons: Exceeding the load−bearing range	Remove or reducing heavy objects from the desktop
E05	Backoff reasons: Encountered obstacles while the desktop running	Remove the obstacles
Hot	Motor overheating reasons: Using too long results in the temperature of the motor too high	At this time, any operation is invalid. All you need to do is waiting the motor to restore normal temperature.
Rst	Reset reasons: When using it for the first time, it needs to be reset	Must run down to reset, and only the down key is valid, at this time, long press the down key desktop continues to run down until the movement of the lowest position, release and then long press the down key for 5 seconds, until the digital tube displays the actual height, the reset is successful, and resume operation.



Manufacturer: Beijing Kingsmith Technology Co., Ltd.
Address: Floor 4, Building 25, Area 18, ABP Park, Fengtai, Beijing, China.

MADE IN CHINA