Assembly Instruction

5'		
A	Headboard	1 pc
B	Footboard	1 pc
C	Side Rail	2 pcs
D	Center rail	1 pc
E	Support Leg	2 pcs
F	Slat	28 pcs
G	Middle Holder	14 pcs
H	End Holder	28 pcs
I	JCBC M6 X 40	2 pcs
J	M4 x 65mm	1 pc
K	M5 x 70mm	1 pc
L	CSK M4 x 25mm	2 pcs
M	CSK M4 x 16mm	4 pcs

Step 1: Attach Side Rail (C) to Headboard (A) and Footboard (B) by pushing the bracket down to fit it.

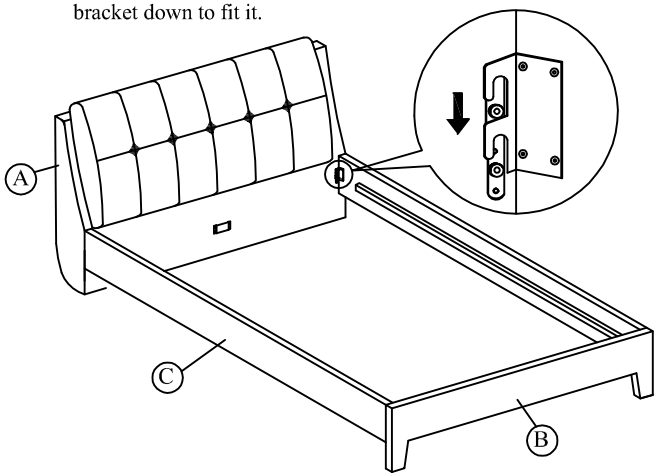

Step 2: Attach the support legs (E) to the center rail (D) of the bed as shown.

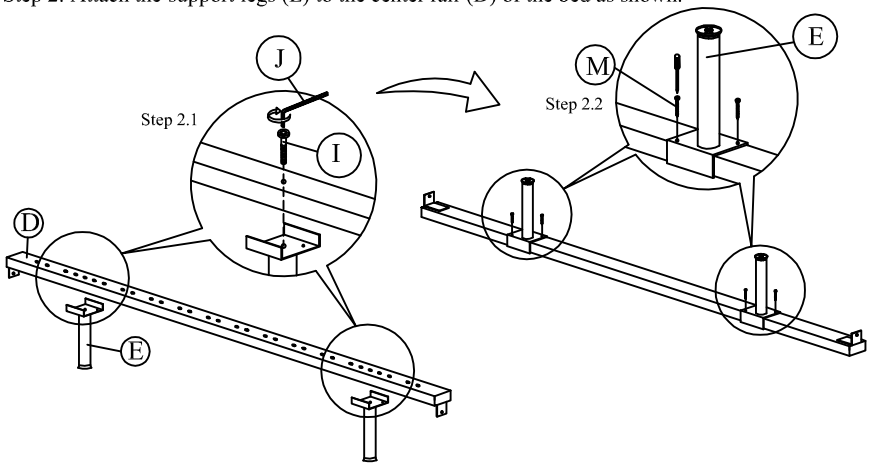

Step 3: Slide the center rail (D) to the headboard (A) and footboard (B). Tighten screws (L) using screw driver (not included) to the headboard (A) and footboard (B)

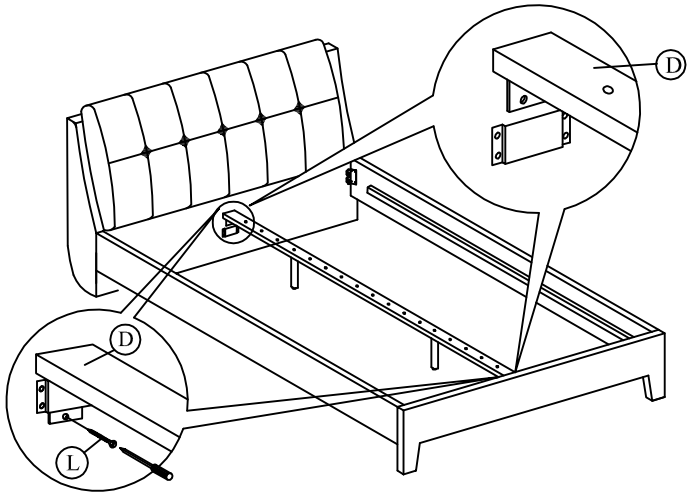
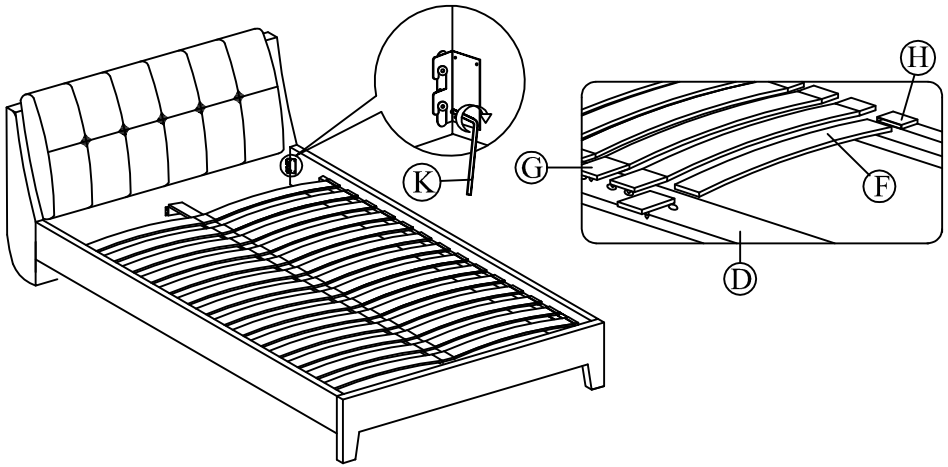
Step 4: Tighten all the 4 corner ,follow by assembly of the slat holders with LVL slats as shown.