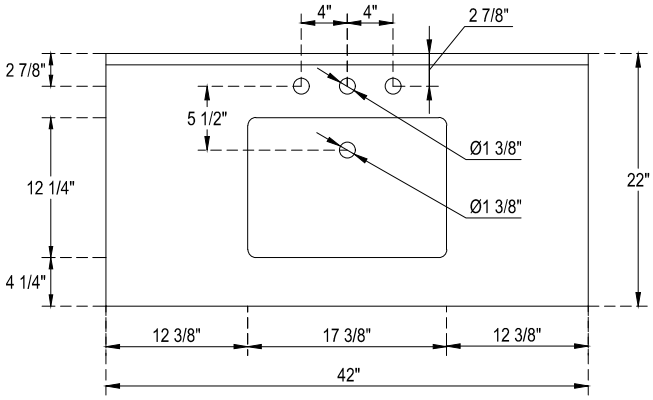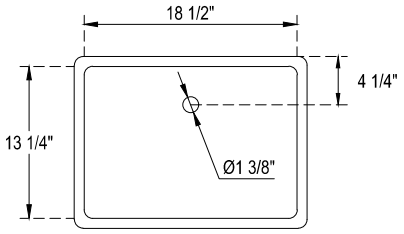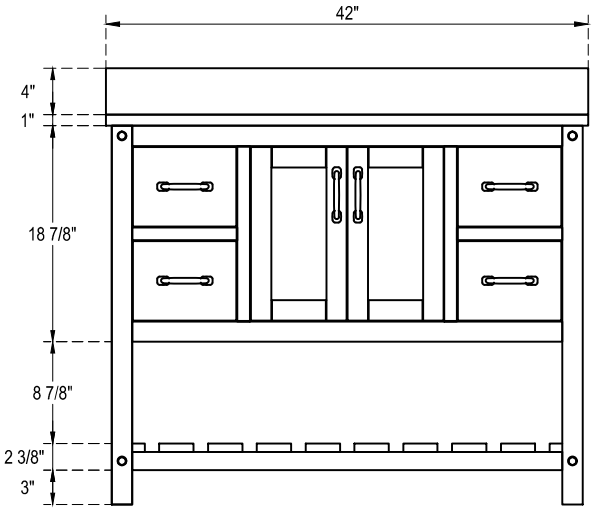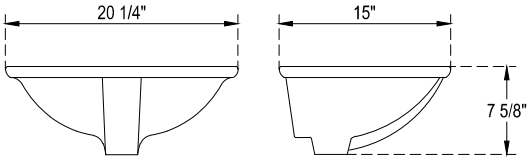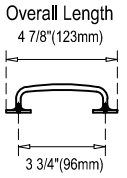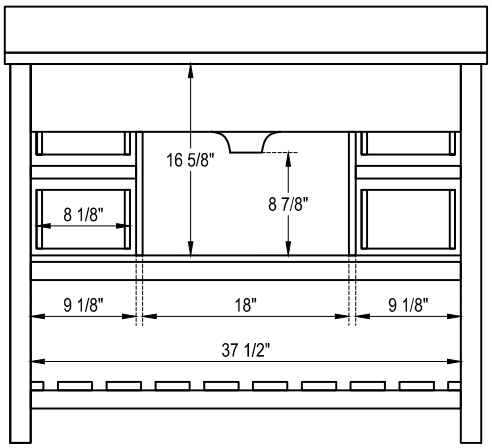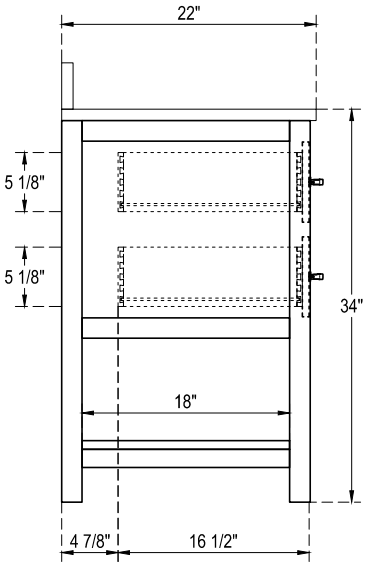SPECIFICATIONS