TLG92022

CLASSIC OUTDOOR SWING SET



ASSEMBLY INSTRUCTIONS







BATCH CODE

⚠ WARNING

To reduce the risk of serious injury or death, please read and follow these instructions. Keep and refer to instructions as needed and pass along to any future owners of this item.

⚠ WARNING:
Adult assembly required

REV 11/20/2025

Warnings and Safe Play Instructions

CONTINUOUS ADULT SUPERVISION REQUIRED. Most serious injuries and deaths on playground equipment have occurred while children were unsupervised! Our products are designed to meet mandatory and voluntary safety standards. Complying with all warnings and recommendations in these instructions will reduce the risk of serious or fatal injury to children using this play system. Go over the warnings and safe play instructions regularly with your children and make certain that they understand and follow them. Remember on-site adult supervision is required for children of all ages.

WARNING

SERIOUS HEAD INJURY HAZARD
Installation over concrete, asphalt, dirt, grass, carpet and other hard surface creates a risk of serious injury or death from falls to the ground. Install and maintain shock absorbing material under and around play-set as recommended on page 2 of these instructions.

COLLISION HAZARD
Place play-set on level ground at least 2m from any obstruction such as a garage or house, fences, poles, trees, sidewalks, walls, landscape timbers, rocks, pavement, planters, garden borders, overhanging branches, laundry lines, and electrical wires. (See OBSTACLE FREE SAFETY ZONE on cover)

CHOKING HAZARD/SHARP EDGES & POINTS
Adult assembly required. This product contains small parts and parts with sharp edges and points. Keep parts away from children until fully assembled.

WARNING LABEL
Owners shall be responsible for maintaining the legibility of the warning labels.

STRANGULATION HAZARD
- NEVER allow children to play with ropes, clotheslines, pet leashes, cables, chains or cord-like items when using this play-set or to attach these items to play-set.
- NEVER allow children to wear loose fitting clothing, ponchos, hoods, scarves, capes, necklaces, items with draw-strings, cords or ties when using this play-set.
- NEVER allow children to wear bike or sport helmets when using this play-set.

Failure to prohibit these items, even helmets with chin straps, increases the risk of serious injury and death to children from entanglement and strangulation.

TIP OVER HAZARD
Choose a level location for the equipment. This can reduce the likelihood of the play set tipping over and loose-fill surfacing materials washing away during heavy rains.

DO NOT allow children to play on the play-set until the assembly is complete and the unit is properly anchored.

Never add extra length to chain or rope. The chains or ropes provided are the maximum length designed for the swinging element(s).

WARNING – Safe Play Instructions

- ✓ Observe capacity limitations of your play-set. See front cover.
- ✓ Dress children with well fitting and full foot enclosing footwear.
- ✓ Teach children to sit with their full weight in the center of the swing seat to prevent erratic swing motion or falling off.
- ✓ Check for splintered, broken or cracked wood; missing, loose, or sharp edged hardware. Replace, tighten and or sand smooth as required prior to playing.
- ✓ Verify that suspended climbing ropes, rope ladders, chain or cable are secured at both ends and cannot be looped back on itself as to create an entanglement hazard.
- ✓ On sunny and or hot days, check the slide and other plastic rides to assure that they are not very hot as to cause burns. Cool hot slide and rides with water and wipe dry prior to using.
- ✓ Orientate slide such that it gets the least amount of exposure to the sun.
- ✘ Do not allow children to wear open toe or heel footwear like sandals, flip–flops or clogs.
- ✘ Do not allow children to walk, in front, between, behind or close to moving rides.
- ✘ Do not let children twist swing chains or ropes or loop them over the top support bar. This may reduce the strength of the chain or rope and cause premature failure.
- ✘ Do not let children get off rides while they are in motion.
- ✘ Do not permit climbing on equipment when it is wet.
- ✘ Do not permit rough play or use of equipment in a manner for which it was not intended. Standing on or jumping from the roof, elevated platforms, swings, climbers, ladders or slide can be dangerous.
- ✘ Do not allow children to swing empty rides or seats.
- ✘ Do not allow children to go down slide head first or run up slide.

⚠Protective Surfacing - Reducing Risk of Serious Head Injury From Falls

One of the most important things you can do to reduce the likelihood of serious head injuries is to install shock-absorbing protective surfacing under and around your play equipment. The protective surfacing should be applied to a depth that is suitable for the equipment height in accordance with ASTM F1292. There are different types of surfacing to choose from; whichever product you select, follow these guidelines:

Loose-Fill Materials

- Maintain a minimum depth of 9 inches (23 cm) of loose-fill materials such as wood mulch/chips, engineered wood fiber (EWF), or shredded/recycled rubber mulch for equipment up to 8 feet (2.45 m) high; and 9 inches (23 cm) of sand or pea gravel for equipment up to 5 feet (1.5 m) high. NOTE: An initial fill level of 12 inches (31 cm) will compress to about a 9-inch (23 cm) depth of surfacing over time. The surfacing will also compact, displace, and settle, and should be periodically raked and refilled to maintain at least a 9-inch (23 cm) depth.
- Use a minimum of 6 inches (16 cm) of protective surfacing for play equipment less than 4 feet (1.22 m) in height. If maintained properly, this should be adequate. (At depths less than 6 inches (16 cm), the protective material is too easily displaced or compacted.)

NOTE: Do not install home playground equipment over concrete, asphalt, or any other hard surface. A fall onto a hard surface can result in serious injury to the equipment user. Grass and dirt are not considered protective surfacing because wear and environmental factors can reduce their shock absorbing effectiveness. Carpeting and thin mats are not adequate protective surfacing. Ground level equipment -- such as a sandbox, activity wall, playhouse or other equipment that has no elevated play surface -- does not need any protective surfacing.

- Use containment, such as digging out around the perimeter and/or lining the perimeter with landscape edging. Don't forget to account for water drainage.
- Periodically rake, check and maintain the depth of the loose-fill surfacing material. Marking the correct depth on the play equipment support posts will help you to see when the material has settled and needs to be raked and or replenished. Be sure to rake and evenly redistribute the surfacing in heavily used areas.
- Do not install loose fill surfacing over hard surfaces such as concrete or asphalt.

Poured-In-Place Surfaces or Pre-Manufactured Rubber Tiles

You may be interested in using surfacing other than loose-fill materials - like rubber tiles or poured-in-place surfaces.

- Installations of these surfaces generally require a professional and are not "do-it yourself" projects.
- Review surface specifications before purchasing this type of surfacing. The specific height for which the surface is intended to protect against serious head injury. This height should be equal to or greater than the fall height - vertical distance between a designated play surface (*elevated surface for standing, sitting, or climbing*) and the protective surfacing below - of your play equipment.
- Check the protective surfacing frequently for wear.

Placement

Proper placement and maintenance of protective surfacing is essential. Refer to diagram on front cover. Be sure to;

- Extend surfacing at least 6 feet (1.8 m) from the equipment in all directions.
- For to-fro swings, extend protective surfacing in front of and behind the swing to a distance equal to twice the height of the top bar from which the swing is suspended.
- For tire swings, extend surfacing in a circle whose radius is equal to the height of the suspending chain or rope, plus 6 feet (1.8 m) in all directions.

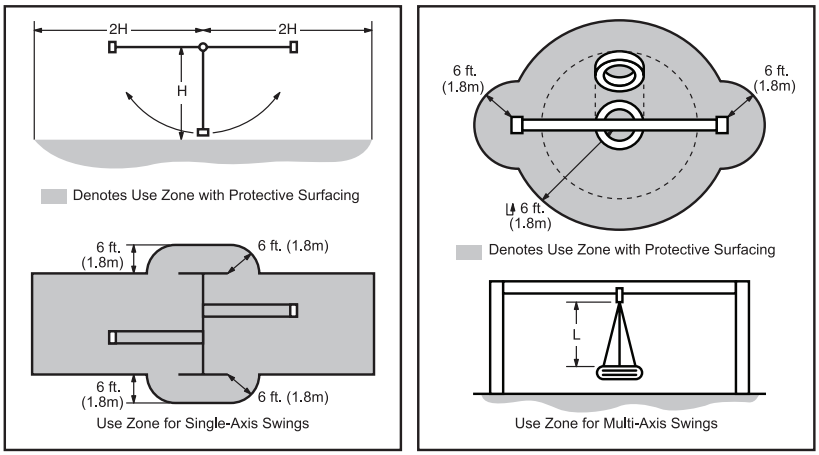

Instructions for Proper Maintenance

Your classic outdoor swing set is designed and constructed of quality materials with your child's safety in mind. As with all outdoor products used by children, it will weather and wear. To maximize the enjoyment, safety and life of your Play Set, it is important that you, the owner, properly maintain it.

Check the following at the beginning of the play season:

HARDWARE:

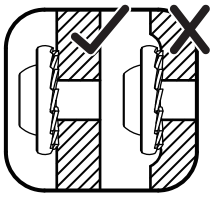

- ✓ Check metal parts for rust. If found, sand and repaint using a non-lead paint complying with 16 CFR 1303.
- ✓ Inspect and tighten all hardware. On wood assemblies DO NOT OVER-TIGHTEN as to cause crushing and splintering of wood.
- ✓ Check for sharp edges or protruding screw threads, add washers if required.

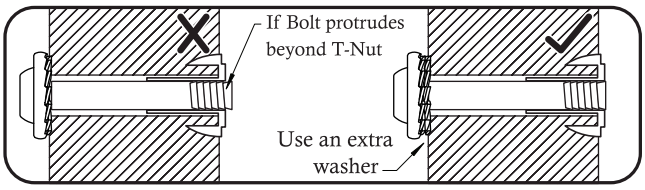

SHOCK ABSORBING SURFACING:

- ✓ Check for foreign objects. Rake and check depth of loose fill protective surfacing materials to prevent compaction and maintain appropriate depth. Replace as necessary. (See Protective Surfacing, page)

GROUND STAKES (ANCHORS):

- ✓ Check for looseness, damage or deterioration. Should firmly anchor unit to ground during use. Re-secure and or replace, if necessary.

SWING HANGERS:

- ✓ Check that bolts are secure and tight. Quick clips should be completely closed and threaded clips screwed tight.
- ✓ If squeaking occurs lubricate bushings with oil or WD-40®.

SWINGS, ROPES AND RIDES:

- ✓ Reinstall if removed during cold season. Check all moving parts including swing seats, ropes, chains and attachments for wear, rust and other deterioration. Replace as needed.
- ✓ Check that ropes are tight, secure at both ends and cannot loop back as to create an entrapment.

WOOD PARTS:

- ✓ Check all wood members for deterioration, structural damage and splintering. Sand down splinters and replace deteriorated wood members. As with all wood, some checking and small cracks in grain is normal.
- ✓ Applying a water repellent or stain (water-based) on a yearly basis is important maintenance to maintain maximum life and performance of the product.

Check twice a month during play season:

HARDWARE:

- ✓ Inspect for tightness. Must be firmly against, but not crushing the wood. DO NOT OVER-TIGHTEN. This will cause splintering of wood.
- ✓ Check for sharp edges or protruding screw threads. Add washers if required.

SHOCK ABSORBING SURFACING:

- ✓ Rake and check depth of loose fill protective surfacing materials to prevent compaction and maintain appropriate depth. Replace as necessary. (See Protective Surfacing, page)

Check once a month during play season:

SWING HANGERS:

- ✓ Check that they are secure and orientated correctly. Hook should rotate freely and perpendicular to support beam.
- ✓ If squeaking occurs lubricate bushings with oil or WD-40®.

SWINGS AND RIDES:

- ✓ Check swing seats, all ropes, chains and attachments for fraying, wear, excessive corrosion or damage. Replace if structurally damaged or deteriorated.

Check at the end of the play season:

SWINGS AND RIDES:

- ✓ To prolong their life, remove swings and store inside when outside temperature is below 32°F/0°C. Below freezing, plastic parts may become more brittle.

SHOCK ABSORBING SURFACING:

- ✓ Rake and check depth of loose fill protective surfacing materials to prevent compaction and maintain appropriate depth. Replace as necessary. (See Protective Surfacing, page)

If you dispose of your play set: Please disassemble and dispose of your unit so that it does not create any unreasonable hazards at the time it is discarded. Be sure to follow your local waste ordinances.

About Our Wood

Classic outdoor swing set uses only premium playset lumber, ensuring the safest product for your children's use. Although we take great care in selecting the best quality lumber available, wood is still a product of nature and susceptible to weathering which can change the appearance of your set.

What causes weathering? Does it affect the strength of my Play System?

One of the main reasons for weathering is the effects of water (moisture); the moisture content of the wood at the surface is different than the interior of the wood. As the climate changes, moisture moves in or out of the wood, causing tension which can result in checking and or warping. You can expect the following due to weathering. These changes will not affect the strength of the product:

1. **Checking** is surface cracks in the wood along the grain. A post 4" x 4" (101mm x 101mm) will experience more checking than a board 1" x 4" (25mm x 101mm) because the surface and interior moisture content will vary more widely than in

thinner wood.

2. **Warping** results from any distortion (twisting, cupping) from the original plane of the board and often happens from rapid wetting and drying of the wood.

3. **Fading** happens as a natural change in the wood color as it is exposed to sun-light and will turn a grey over time.

How can I reduce the amount of weathering to my Play System?

At the factory we have coated the wood with a water repellent or stain. This coating decreases the amount of water absorption during rain or snow thus decreasing the tension in the wood. Sunlight will break down the coating, so we recommend applying a water repellent or stain on a yearly basis (see your local stain and paint supplier for a recommended product).

Most weathering is just the normal result of nature and will not affect safe play and enjoyment for your child.

Keys to Assembly Success

Part Identification Key
On each page, you will find the parts and quantities required to complete the assembly step illustrated on that page. Here is a sample.

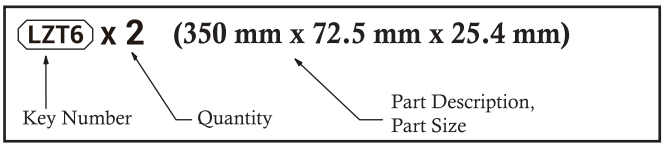

Symbols and tools use

This identifies information that requires special attention. Improper assembly could lead to an unsafe or dangerous condition.

Use Help Use Help

Where this is shown, 2 or 3 people are required to safely complete the step. To avoid injury or damage to the assembly make sure to get help!

Measure Distance

Use a measuring tape to assure proper location.

Check that assembly is square before tightening bolts.

Square Assembly

Check that set or assembly is properly level before proceeding.

Use Level

Pre-drill 1/8"(3mm) & 3/16"(5mm) Bit

Pre-drill a pilot hole before fastening screw or lag to prevent splitting of wood.

3mm 5mm

Tighten Bolts

This indicates time to tighten bolts, but not too tight! Do not crush the wood. This may create splinters and cause structural damage.

CAUTION – Protrusion Hazard

Once the assembly is tightened, watch for exposed threads. If a thread protrudes from the T-Nut, remove the bolt and add washers to eliminate this condition.

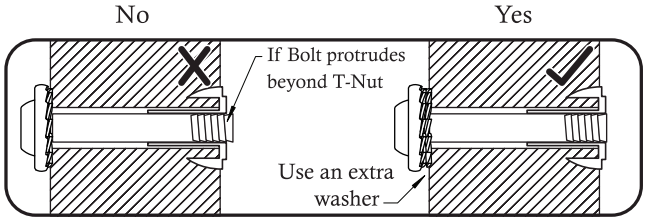

Proper Hardware Assembly
Screws require drilling pilot holes to avoid splitting wood. Only a washer is required. For ease of installation liquid soap can be used on all screws.

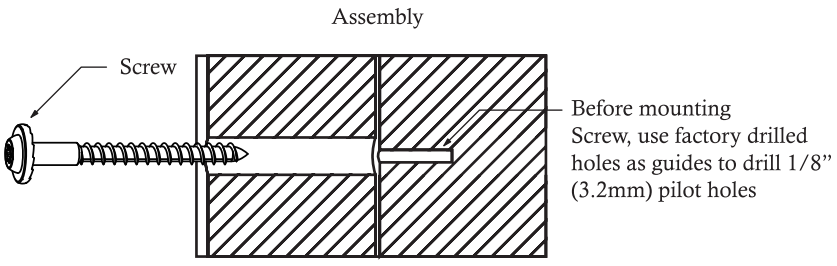

For bolts, tap T-Nut into hole with hammer. Insert the bolt through washer. Because the assemblies need to be squared do not completely tighten until instructed. Pay close attention to diameter of the bolts. 5/16" (8mm) is slightly larger than 1/4" (6.4mm).

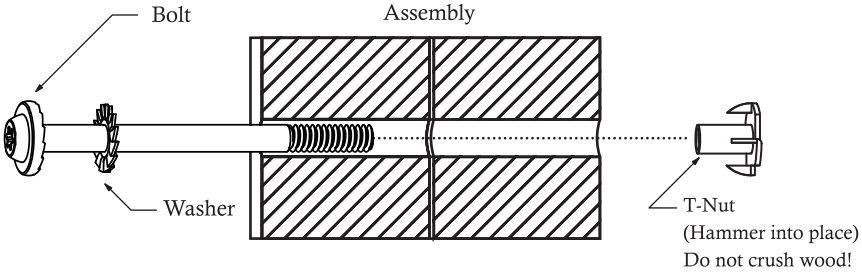

① -1040×140×25.4mm

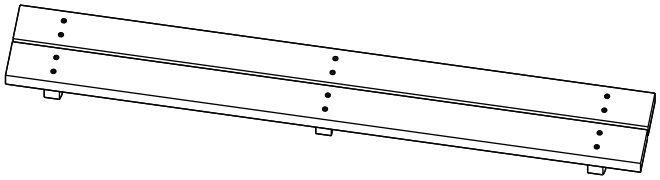

② x 2 -290×50.8×25.4mm

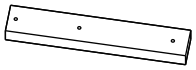

③ x 2 -260×50.8×25.4mm

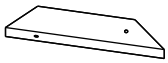

④ x 2 -355×50.8×25.4mm



⑤ -1067×89×15.9mm

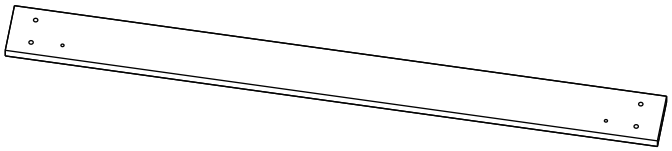

⑨ x 4 -1067×50.8×25.4mm

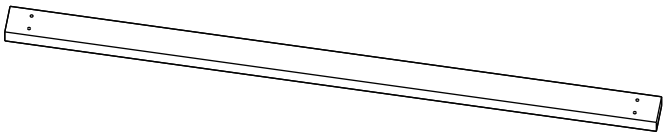

⑥ x 2 -2336×85×35mm

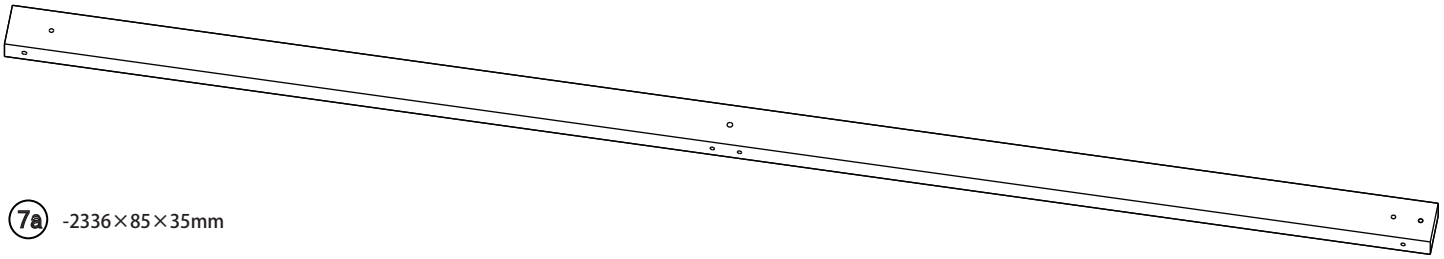

⑦a -2336×85×35mm

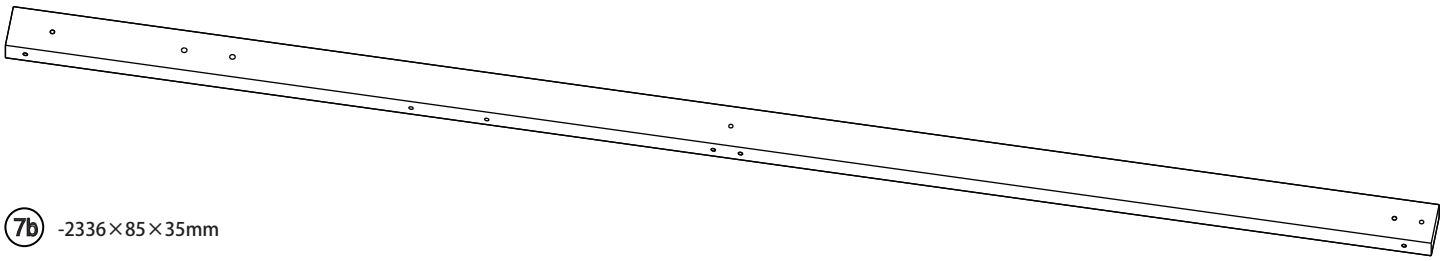

⑦b -2336×85×35mm

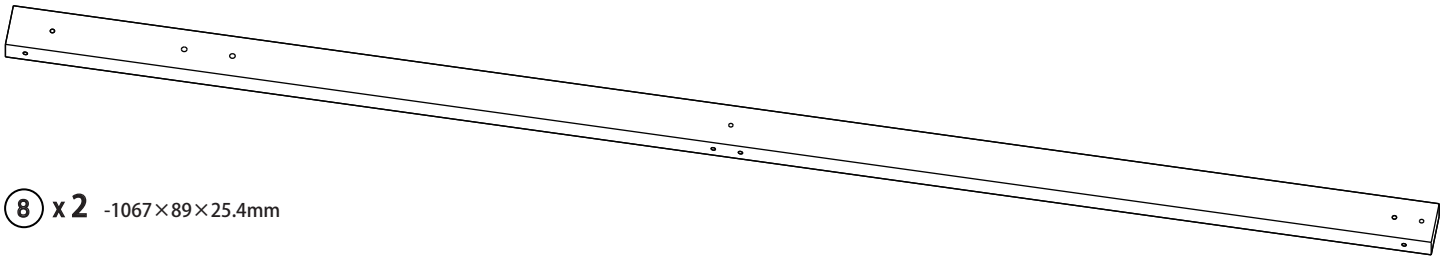

⑧ x 2 -1067×89×25.4mm

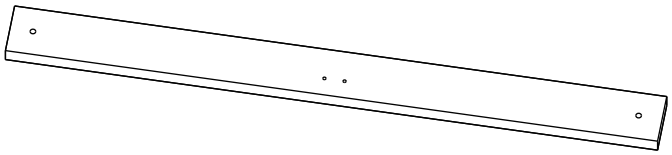

⑩ x 2 -1067×89×15.9mm

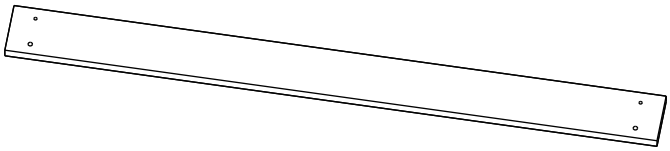

⑪ -1067×136.5×31.8mm

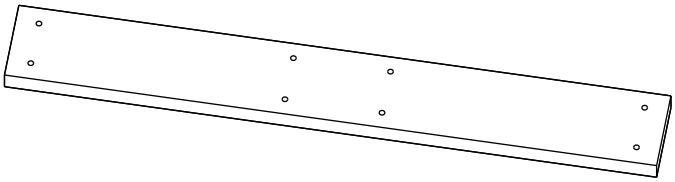

⑫ -1955×89×15.9mm

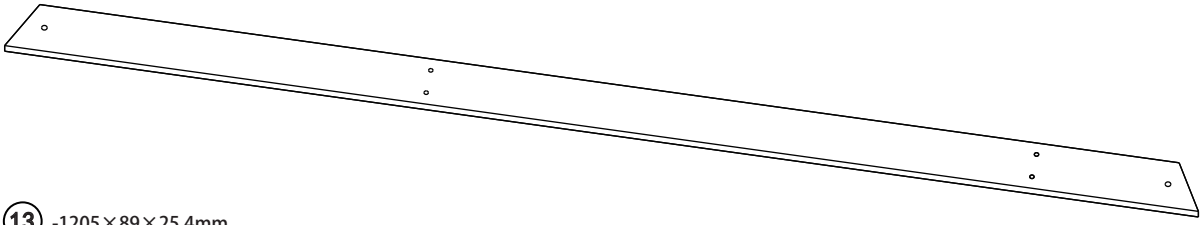

⑬ -1205×89×25.4mm

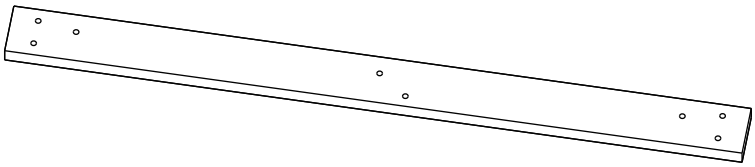

⑱ x 13 -530×114×15.9mm

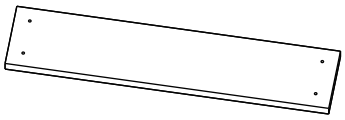

⑭ -1205×89×25.4mm

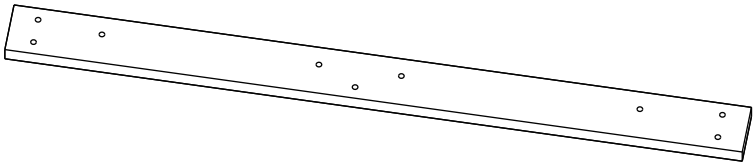

⑲ x 2 -200×50.8×25.4mm

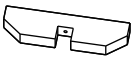

⑮ -1167×89×15.9mm

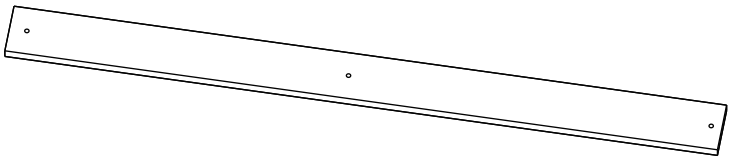

⑳ -895×89×15.9mm

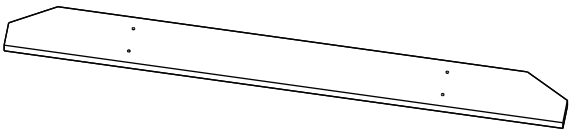

⑯ -1167×89×15.9mm

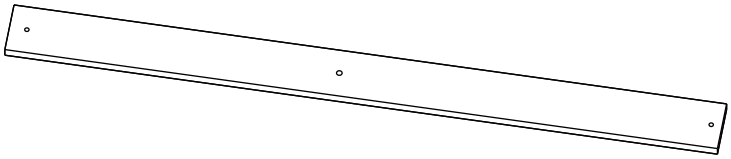

㉑ -1165×114×15.9mm

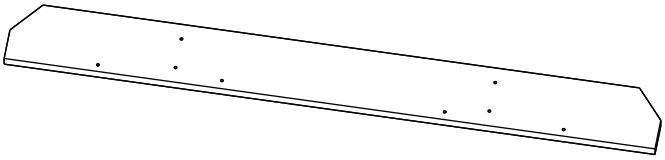

⑰ -1156×76.2×34.9mm

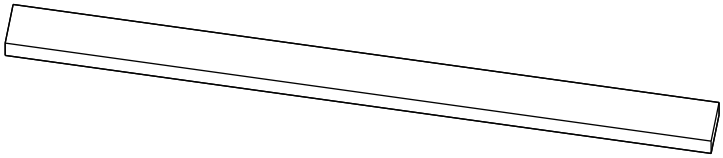

㉒ -520×34.9×34.9mm

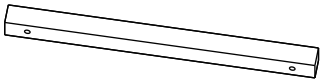

24 -1050×34.9×34.9mm

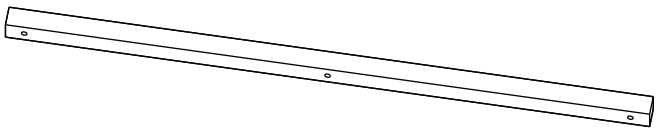

23 -450×34.9×34.9mm

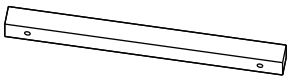

25 -665×50.8×25.4mm

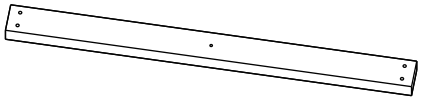

31 -1067×50.8×15.9mm

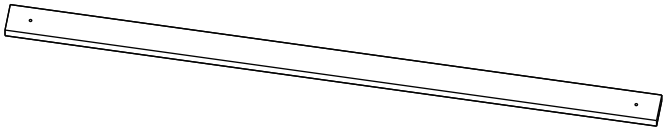

26 -1067×50.8×25.4mm

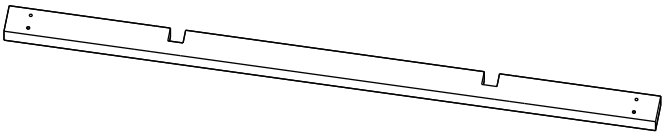

32 x 2 -380×50.8×25.4mm

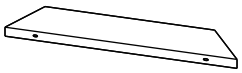

27 -1148×76.2×25.4mm

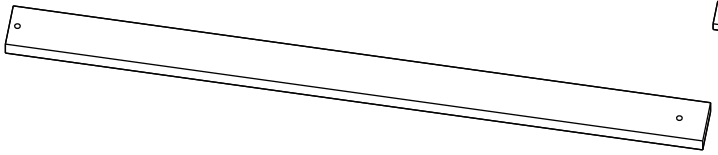

33 -1065×114×15.9mm

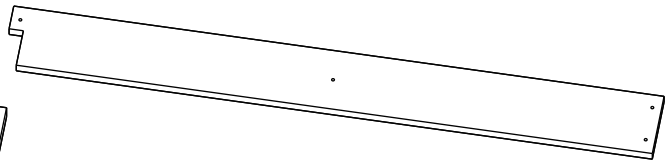

28 -66.5×114×15.9mm

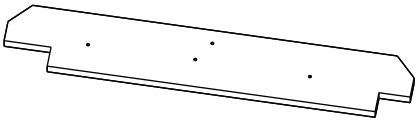

34 x 2 -1065×114×15.9mm

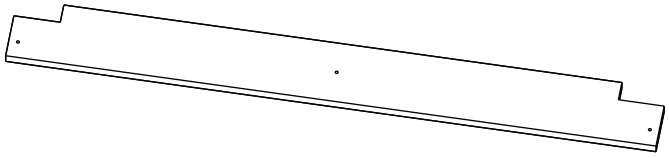

29 -988×300.8×25.4mm

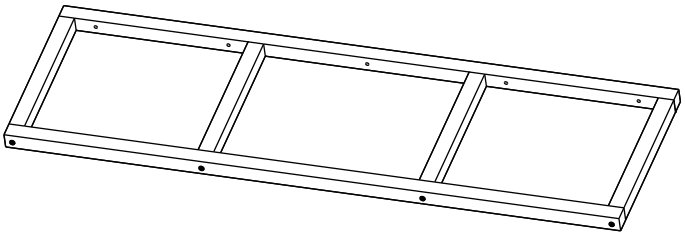

35 x 7 -1065×114×15.9mm

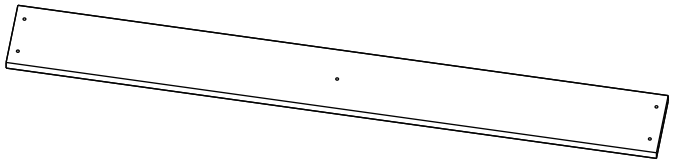

36 x 10 -800×114×15.9mm

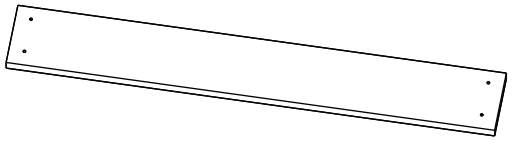

30 -50×50.4×25.4mm



37 x 2 -890×76.2×25.4mm

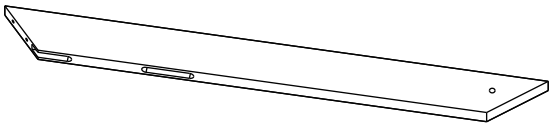

38 x 2 -890×76.2×25.4mm

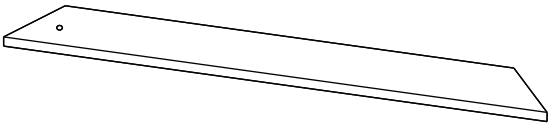

39 x 2 -780×63.5×25.4mm

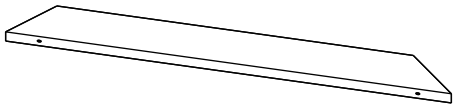

40 x 2 -310×76.2×12.7mm

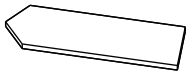

41 x 4 -210×76.2×12.7mm



42 -1340×63.5×25.4mm

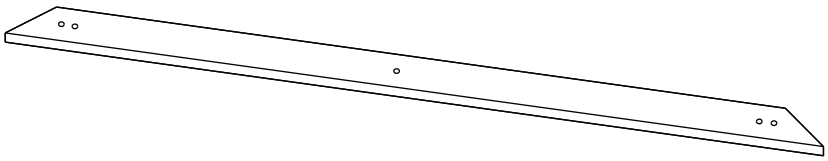

43 -1340×63.5×25.4mm

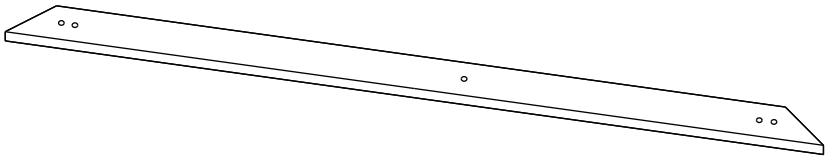

44 x 2 -1218×452.7×28mm

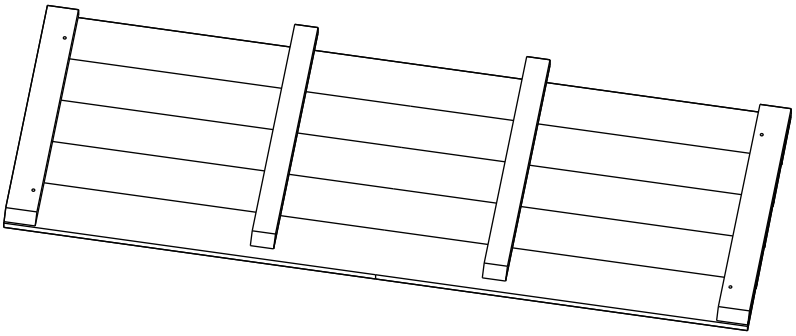

45 -1218×501×28mm

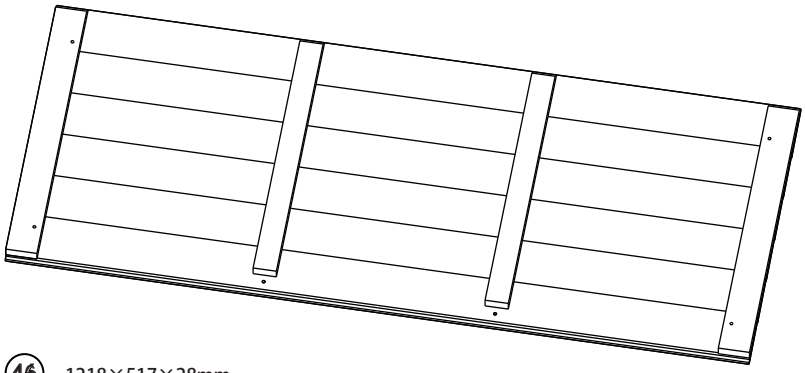

46 -1218×517×28mm

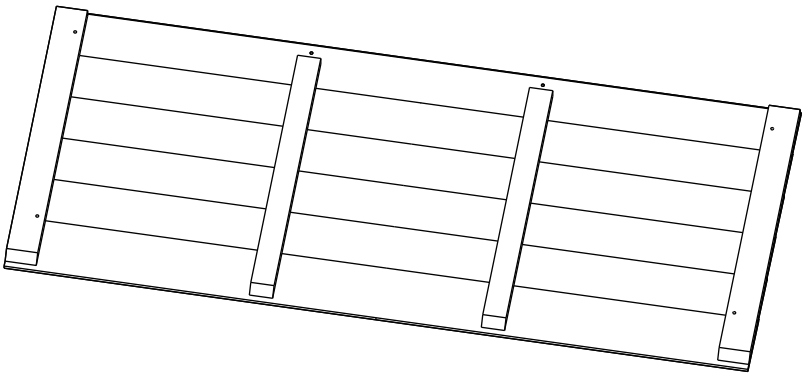

47 -705×50.8 ×25.4mm

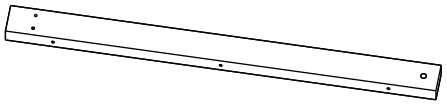

48 -1136×50.8×25.4mm

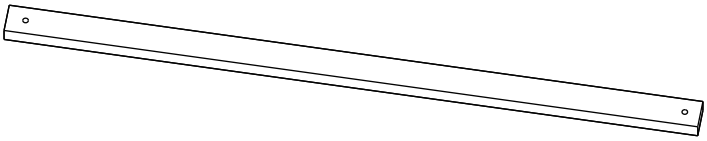

49 x 2 -1136×105×15.9mm

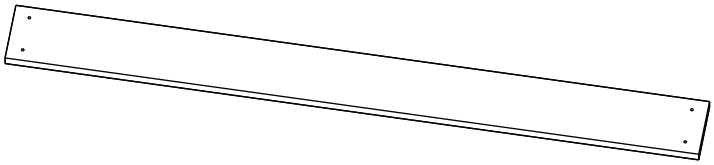

50 -680×76.2×25.4mm

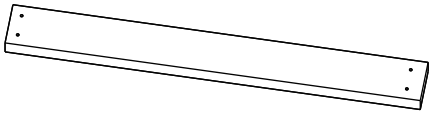

51 x 2 -610×114×15.9mm

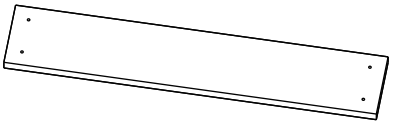

52 -605×50.8×25.4mm

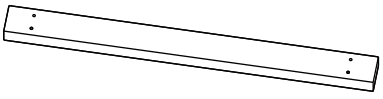

53 x 2 -310×50.8×15.9mm



54 x 2 -570×114×15.9mm

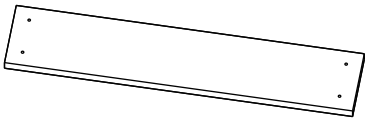

55 x 2 -150×114×15.9mm

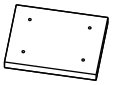

56 -1200×76.2×50.8mm

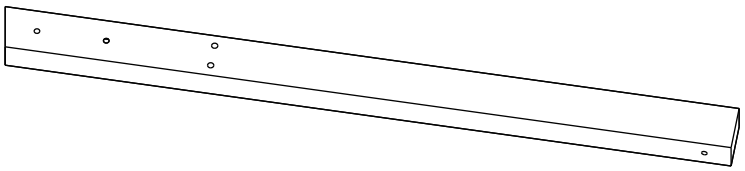

57a -2160×76.2×34.9mm

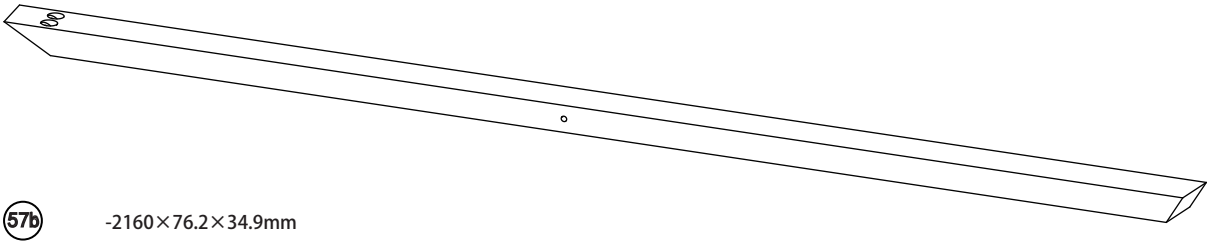

57b -2160×76.2×34.9mm

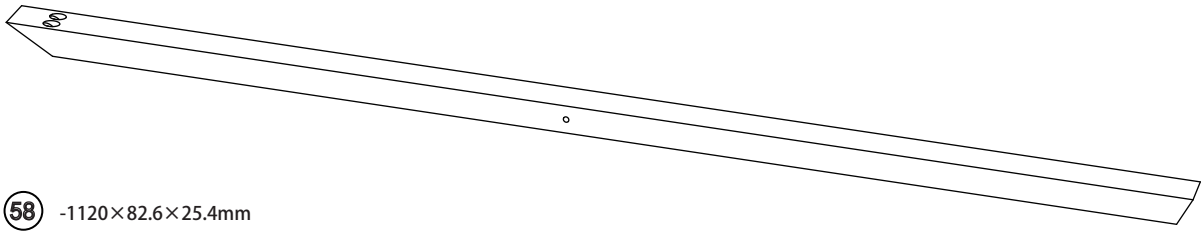

58 -1120×82.6×25.4mm

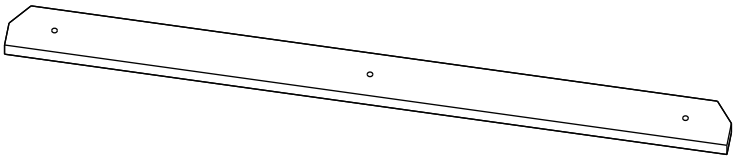

59 x 2 -1136×105×15.9mm

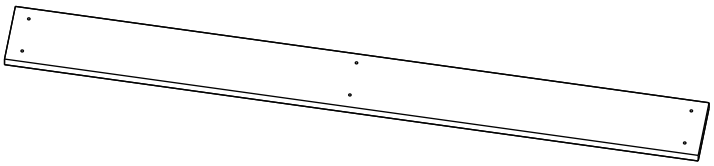

60 -2130×133×50.8mm

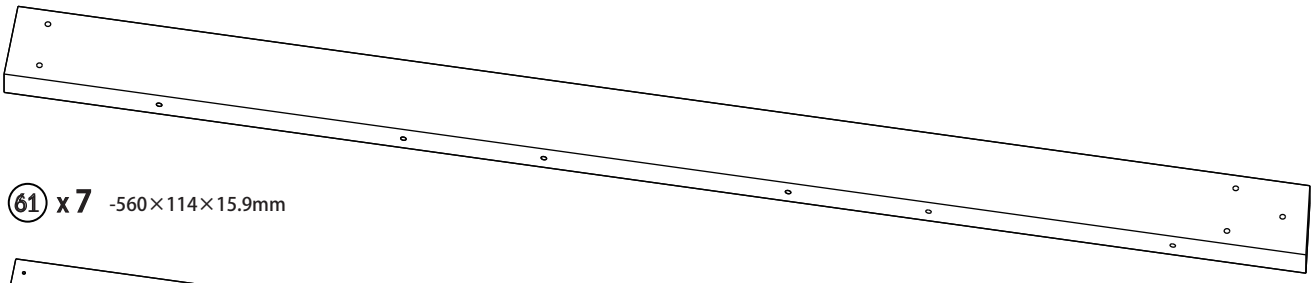

61 x 7 -560×114×15.9mm

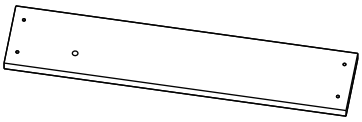

62 -610×114×15.9mm

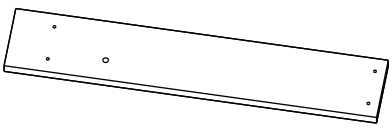

63 -560×76.2×15.9mm

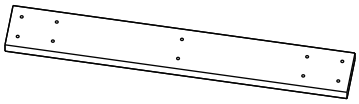

64 -1321×63.5×34.9 mm

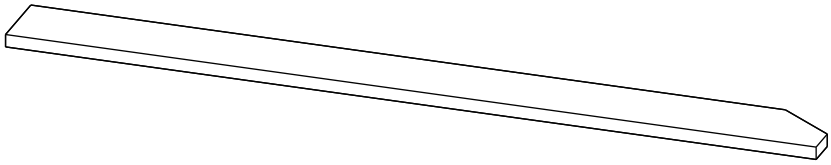

65 -1321×63.5×34.9 mm

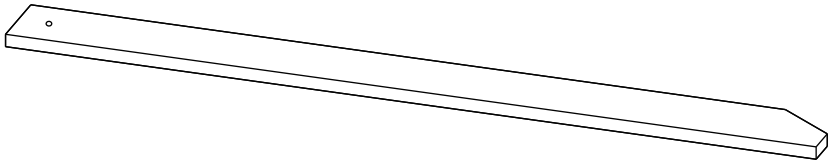

66 -550×63.5×34.9mm

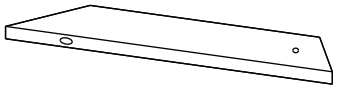

67 -70×63.5×34mm



70 x 6 -262×85×34.9mm

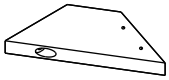

69 x 2 -375×25.4×25.4mm

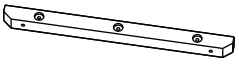

72 -155×30×25.4mm



68 -1004×423.5×28.7mm

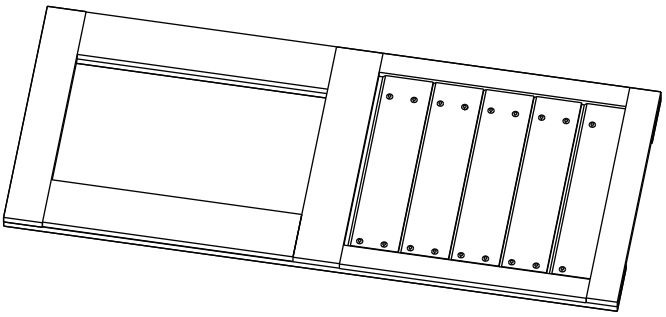

71 -2336×76.2×25.4mm

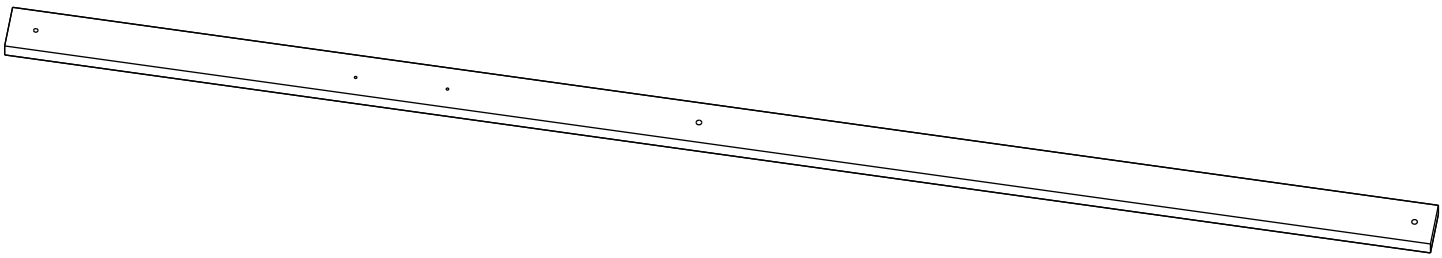

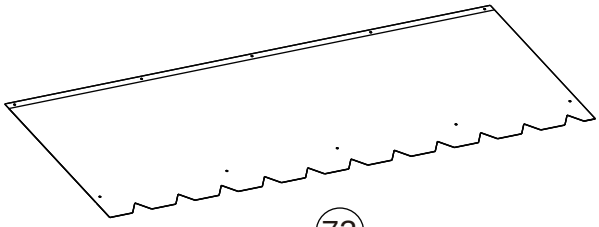

73



SJ1913

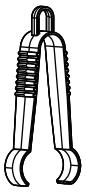

SJ1624

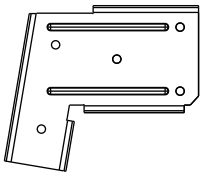

WJ0105-R

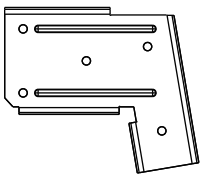

WJ0104-L

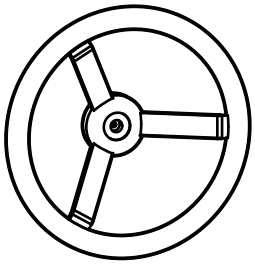

SJ0914

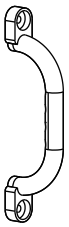

x 2

SJ1402

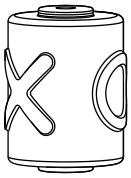

x 9

SJ0928

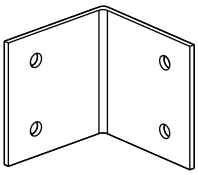

x 2

WJ0103

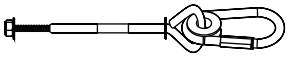

x 6

WJ0102

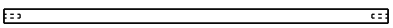

x 3

SJ1946

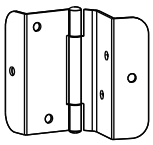

x 2

WJ0202

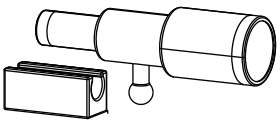

SJ0927

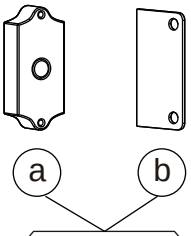

WJ0209

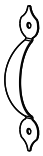

WJ0201

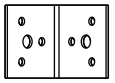

x 2

WJ0208

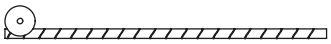

x 6

WJ0112



SJ1609

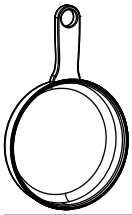

SJ1605



SJ1612

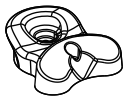

x 4

SJ0910



x 4

SJ0909

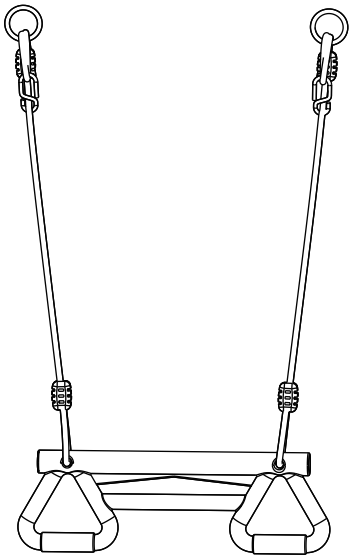

SJ0916

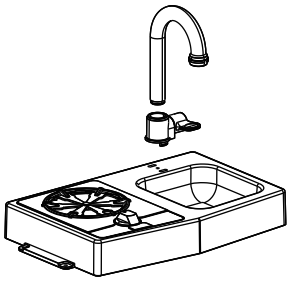

SJ1101



x 2

SJ0915

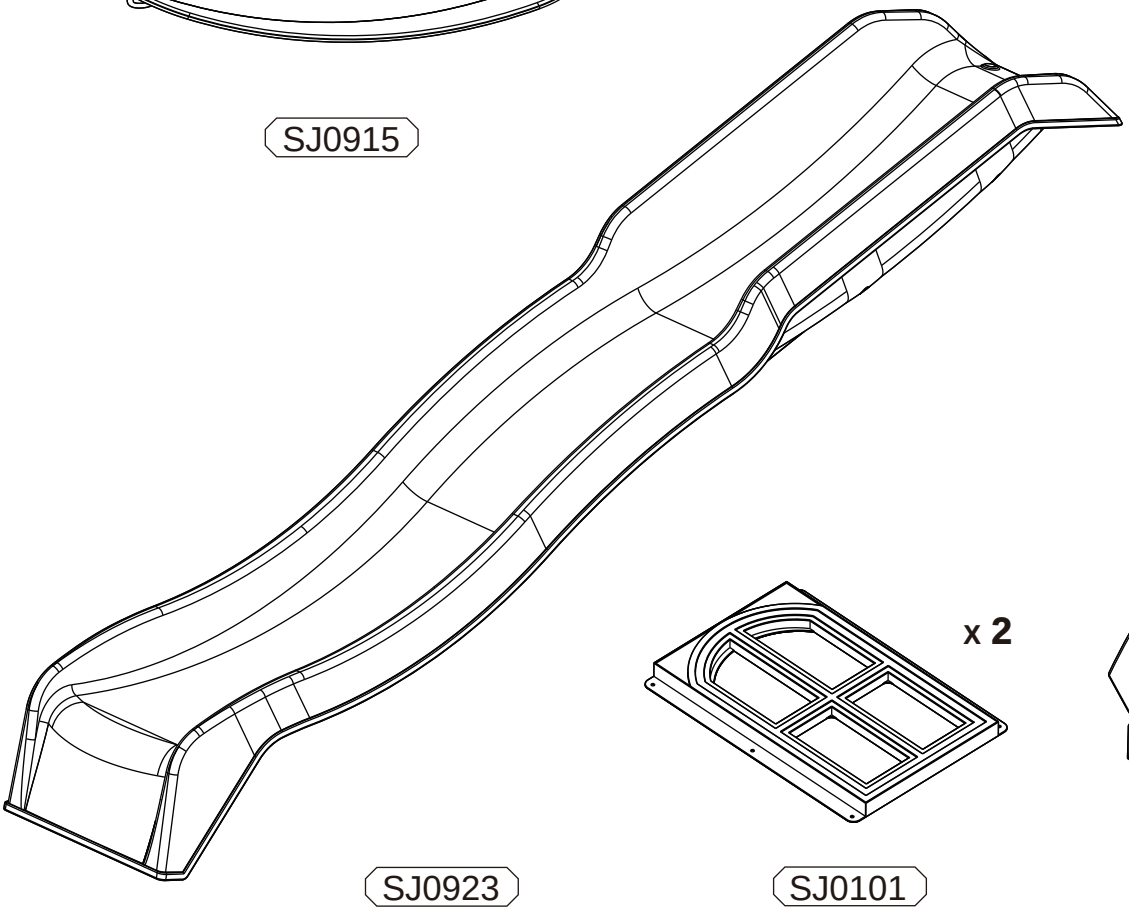

SJ0923

x 2

SJ0101

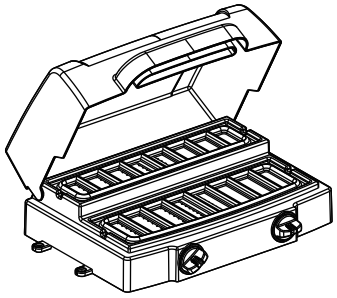

SJ0908

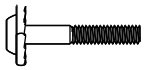

Z6-38 x 6

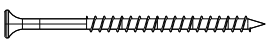

P75 x 9



LZD6 x 4



ZX6-25 x 8

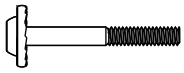

Z6-48 x 28

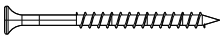

P62 x 12



LZD8 x 16

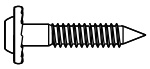

ZJ6-32 x 4

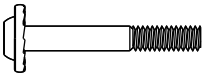

Z8-58 x 11

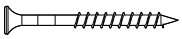

P50 x 12



ZD8 x 37



ZJ6-45 x 1

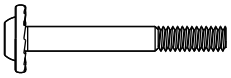

Z8-66 x 11

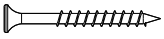

P45 x 68



ZD6 x 30



ZJ6-62 x 7

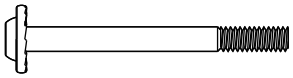

Z8-86 x 1

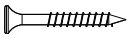

P35 x 108



LZS6 x 42



TD13 x 10

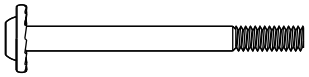

Z8-98 x 7

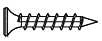

P28 x 143



LZS8 x 35



TX16 x 58

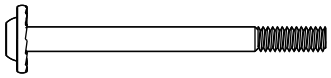

Z8-108 x 12



P23 x 4

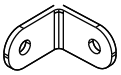

WJ0207 x 4



TX22 x 2

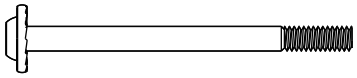

Z8-114 x 2



LZN8 x 9

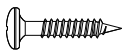

TC25 x 8



BZH8

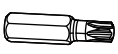

BZH6

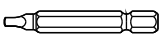

B4

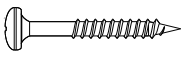

TC50 x 9

Cleaning and Care:
Clean surfaces with a dry or damp soft cloth. Do not use abrasive cleaners.
Nettoyage et Entretien:
Nettoyer les surfaces avec un chiffon doux, sec ou humide. Ne pas utiliser de nettoyants abrasifs.
Limpieza y Cuidado:
Limpie las superficies con un paño suave seco o húmedo. No use limpiadores abrasivos.

Step
Étape
Paso
1

	ZD6 x 6	5 x 1
	ZD8 x 2	6 x 2
	LZS6 x 6	8 x 1
	LZS8 x 2	10 x 1
	P35 x 2	
	Z6-48 x 6	
	Z8-58 x 2	

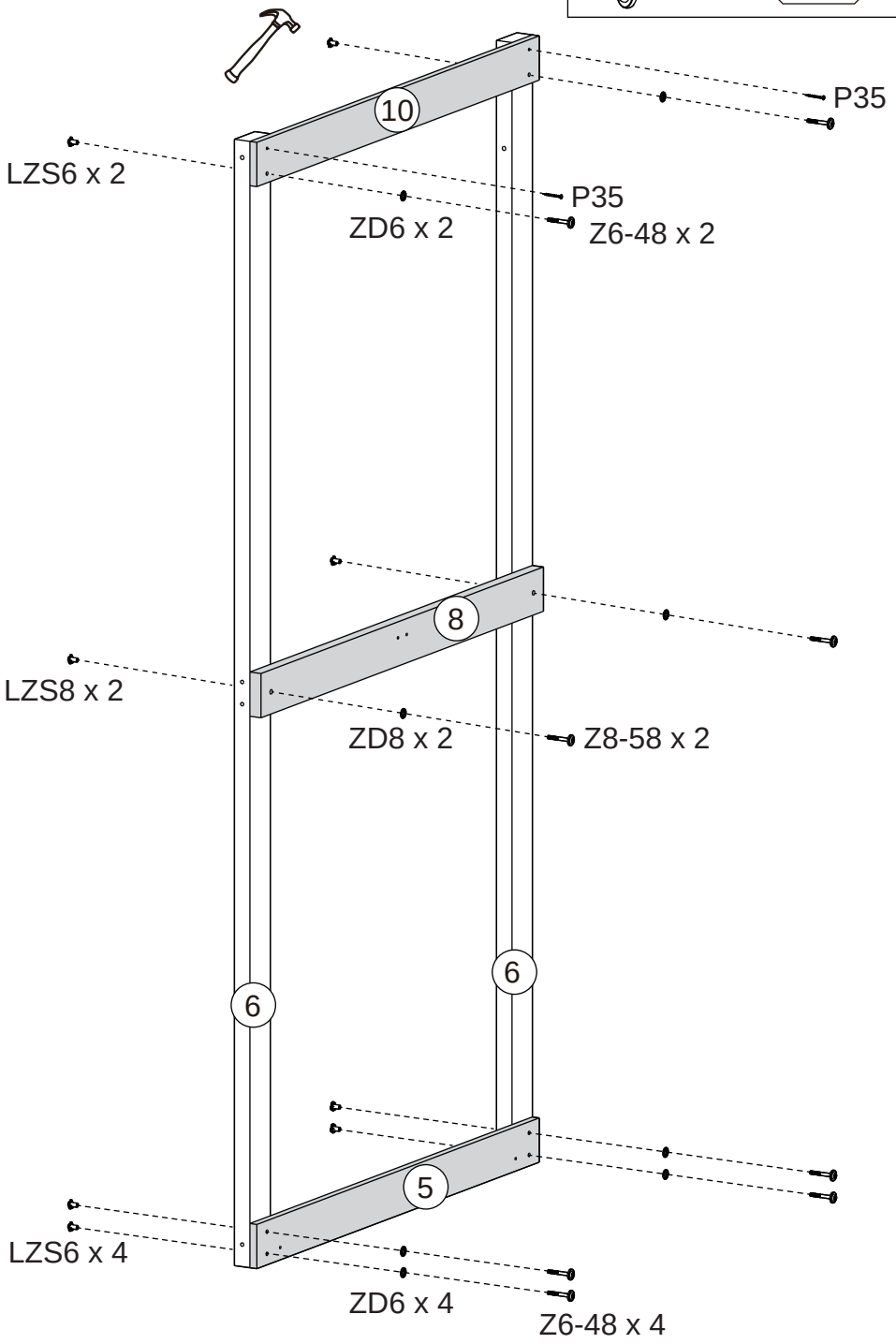

Place horizontally, then assemble

Step
Étape
Paso
2

P45 x 12	26 x 1
	9 x 2

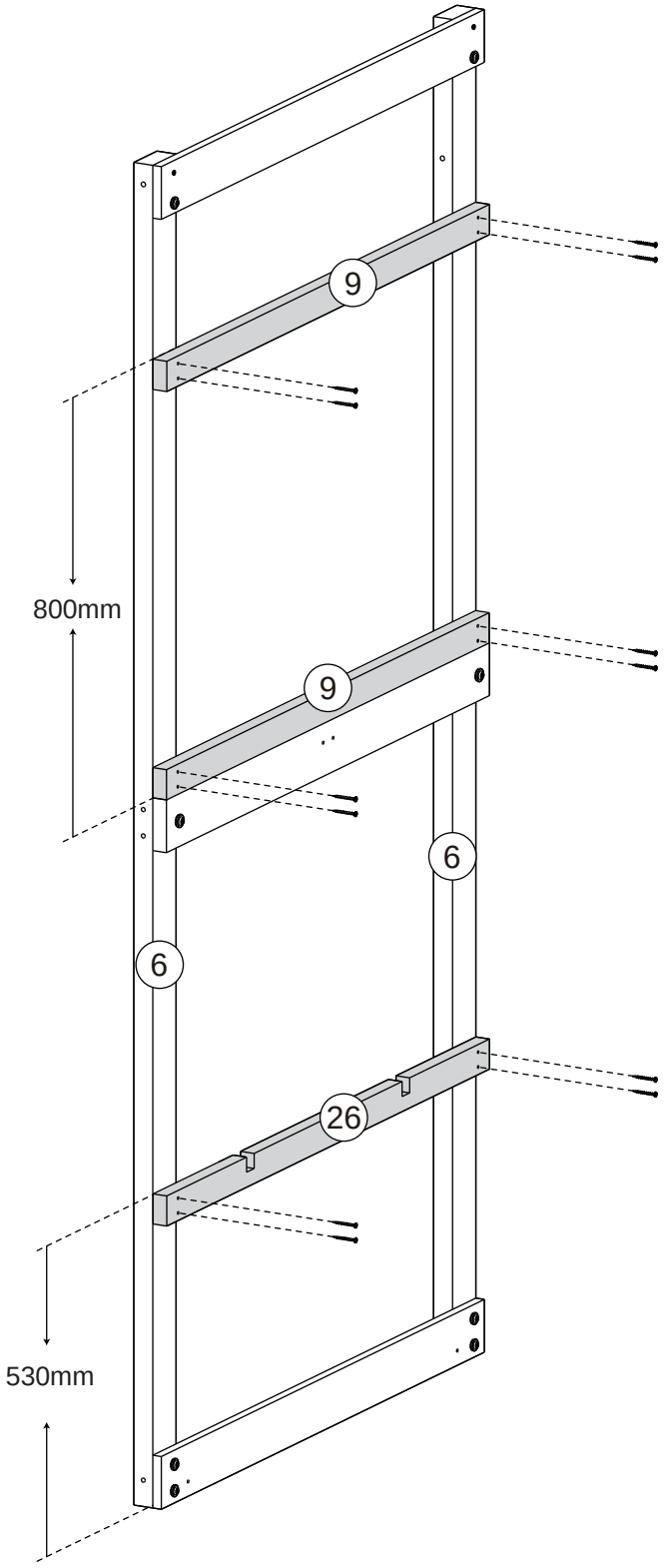

Place horizontally, then assemble

Step
Étape
Paso
3



	LZD6 x 4	7a x 1
	ZD8 x 4	7b x 1
	LZS6 x 4	11 x 1
	LZS8 x 4	WJ0103 x 2
	Z6-38 x 4	
	Z8-66 x 4	

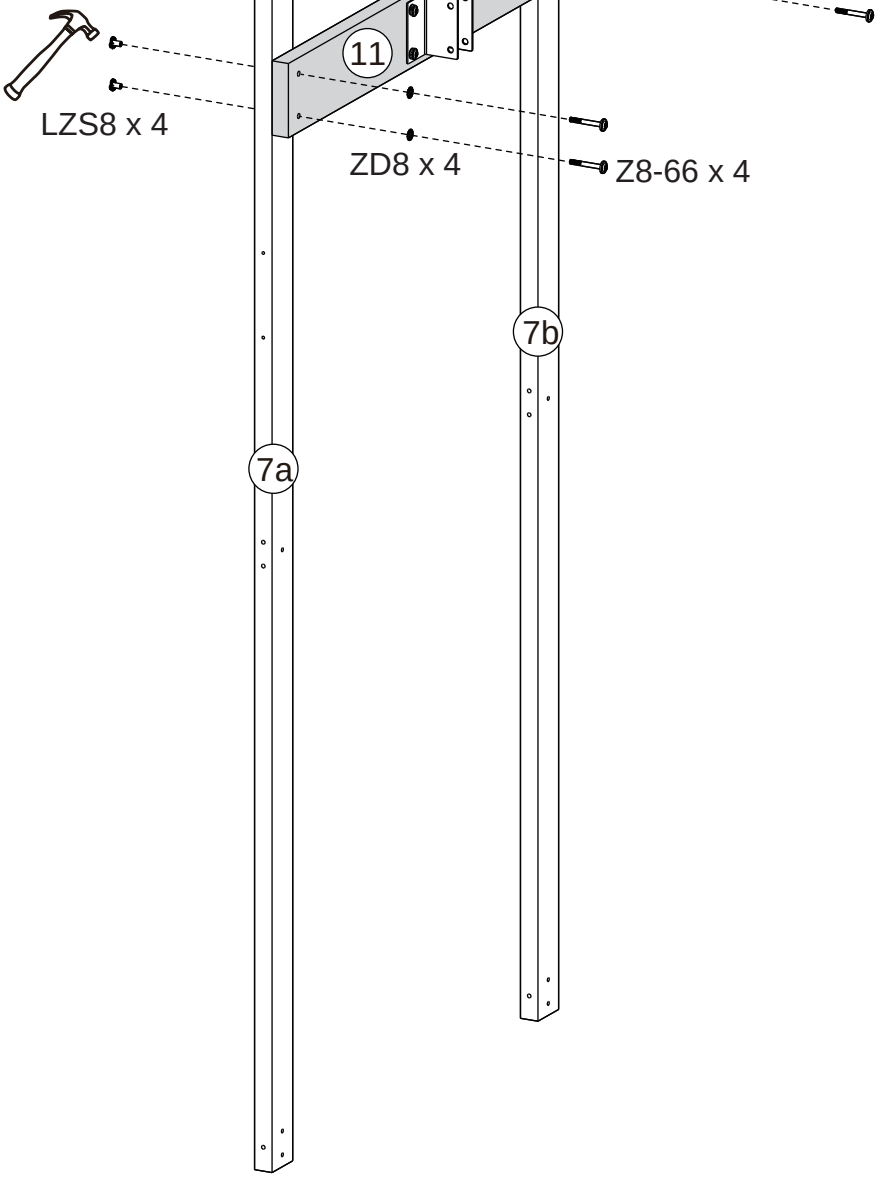

Place horizontally, then assemble

Step
Étape
Paso
4



	ZD6 x 6	8 x 1
	ZD8 x 2	10 x 1
	LZS6 x 6	12 x 1
	LZS8 x 2	
	P35 x 2	
	Z6-48 x 6	
	Z8-58 x 2	

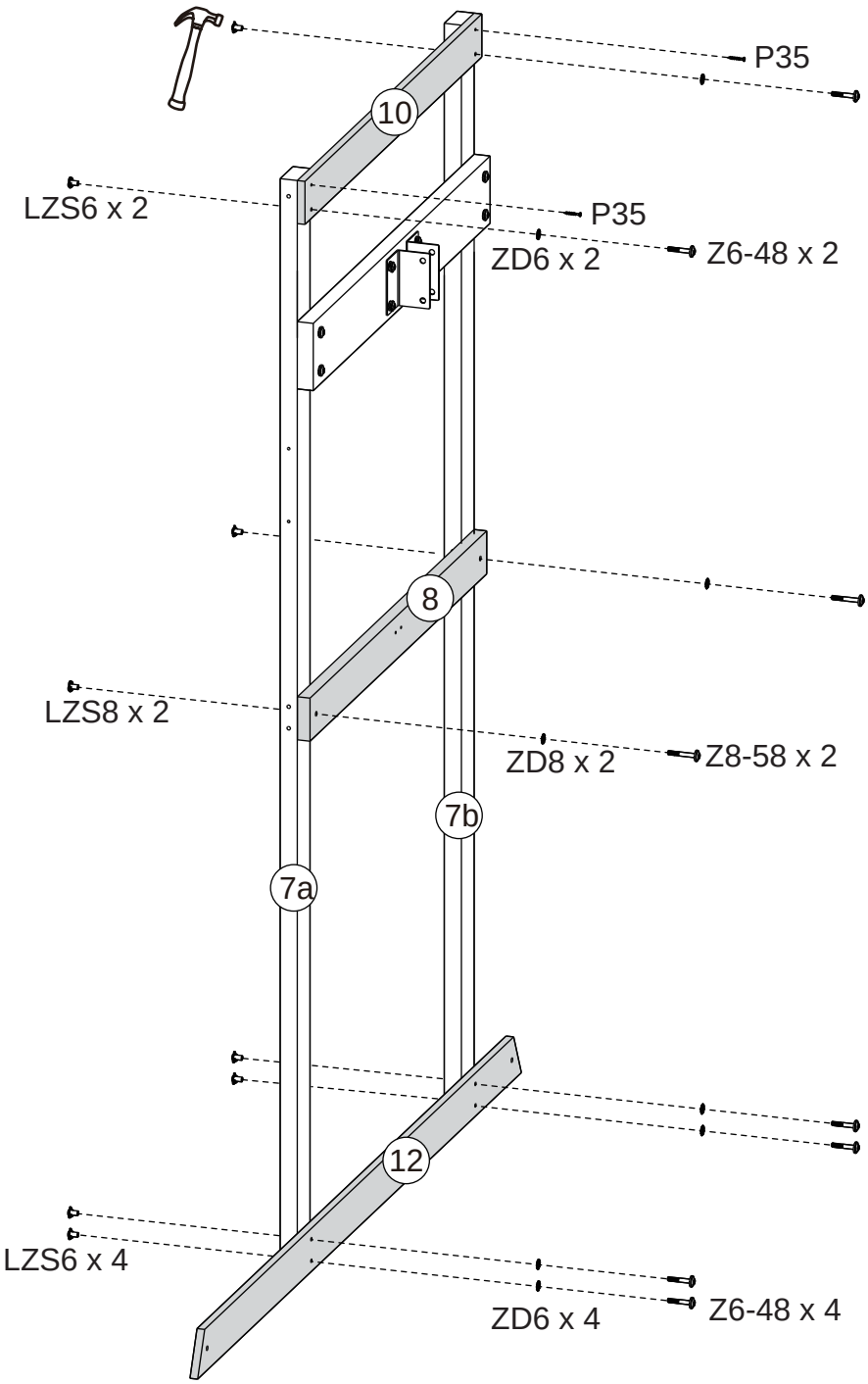

Place horizontally, then assemble

Step
Étape
Paso

5

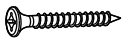	P35 x **2**	9 x **2**
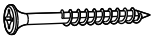	P45 x **8**	31 x **1**

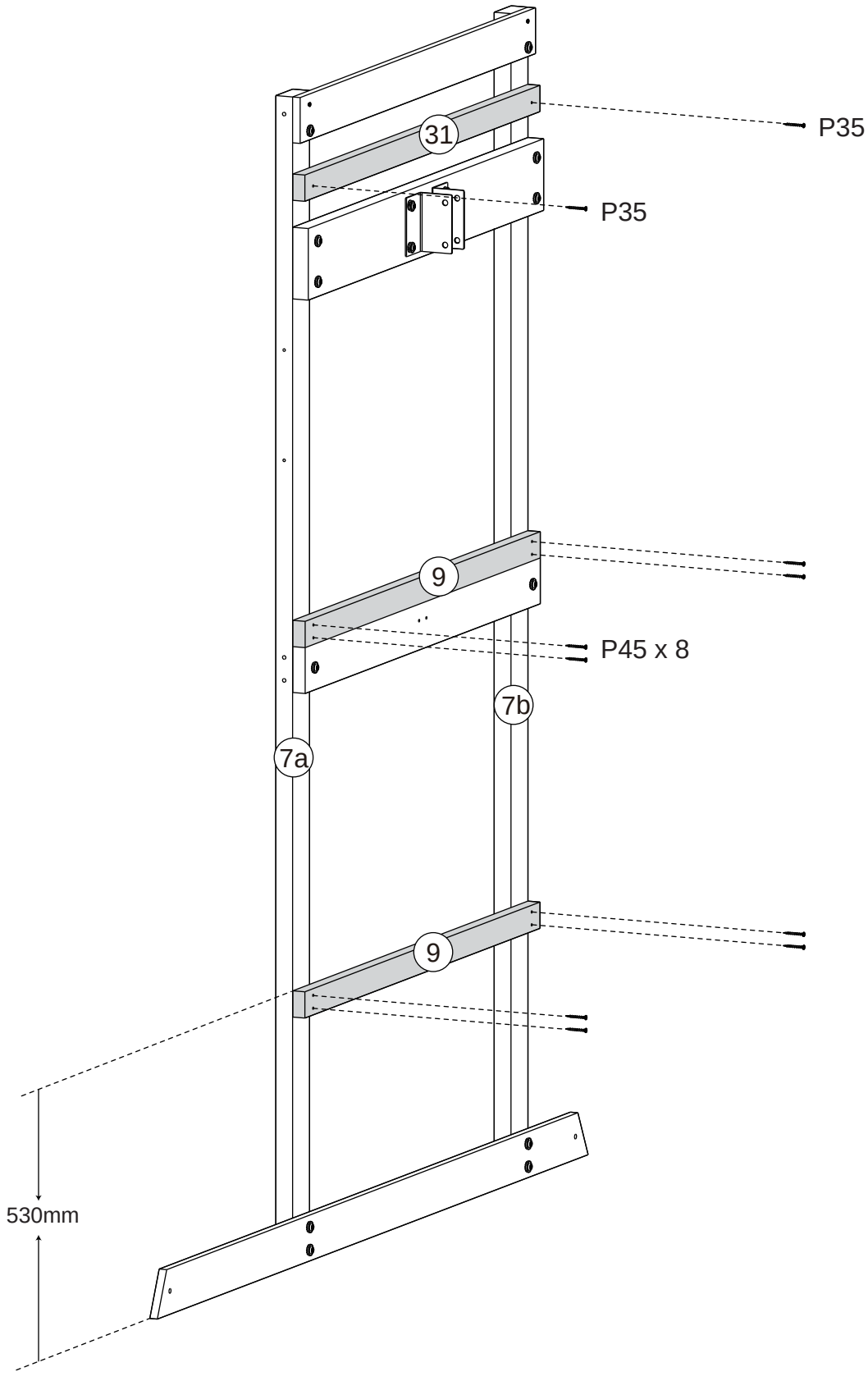

Place horizontally, then assemble

Step
Étape
Paso
6

	ZD8	x 12	13 x 1
	LZS8	x 12	14 x 1
	P62	x 4	15 x 1
	Z8-98	x 4	16 x 1
	Z8-108	x 8	17 x 1

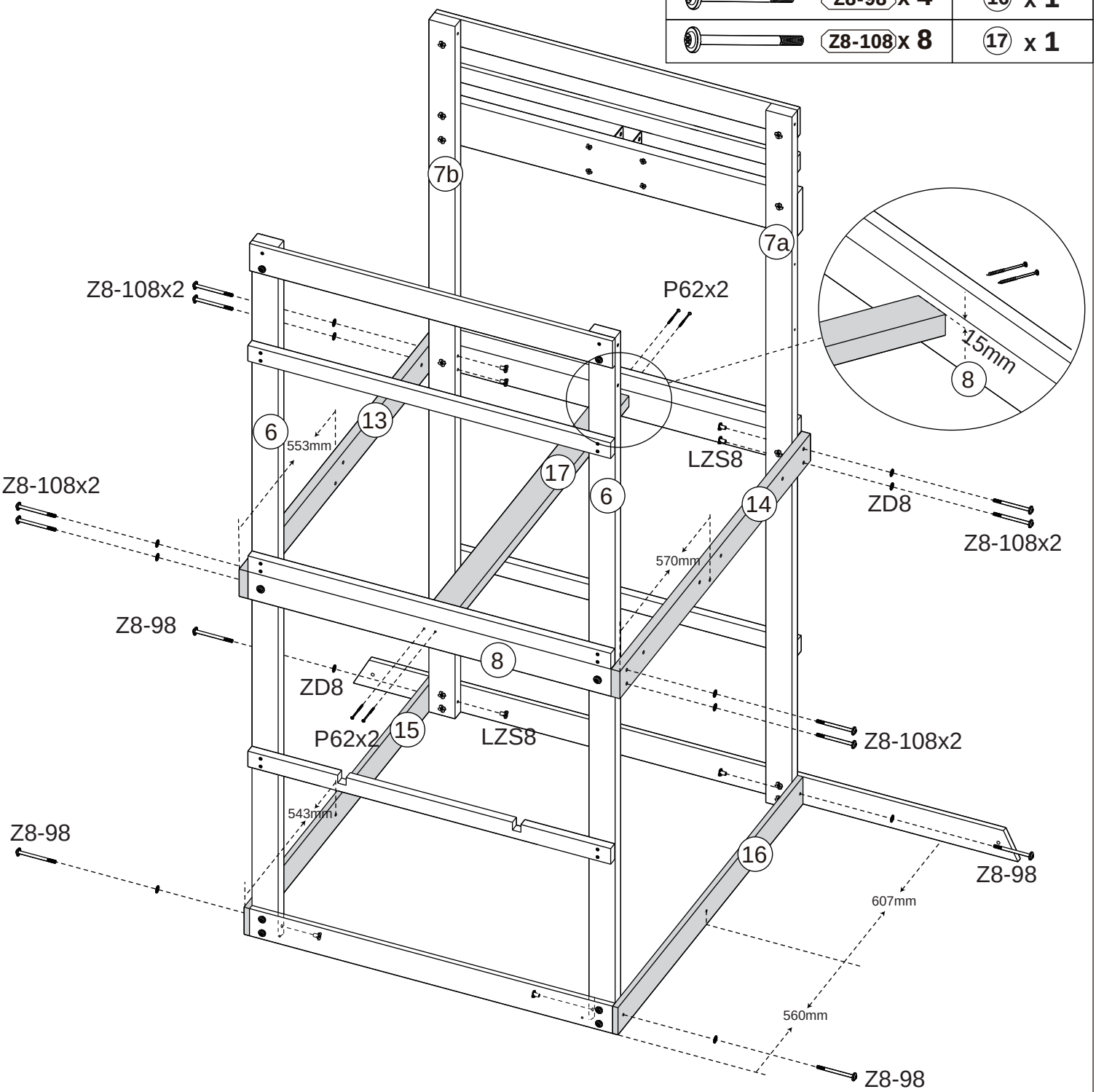

Step
Étape
Paso
7

P28 x 40 | 18 x 10

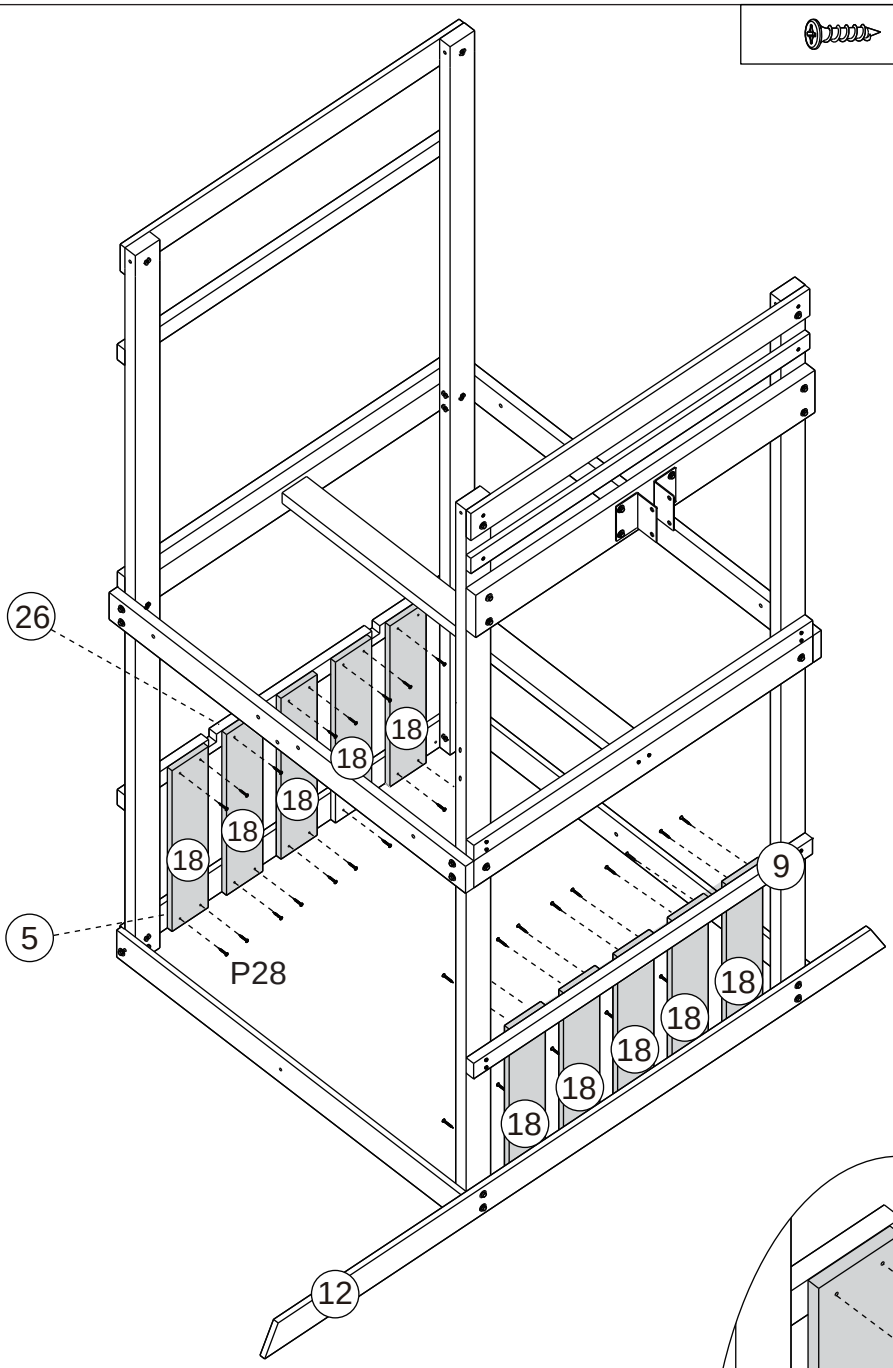

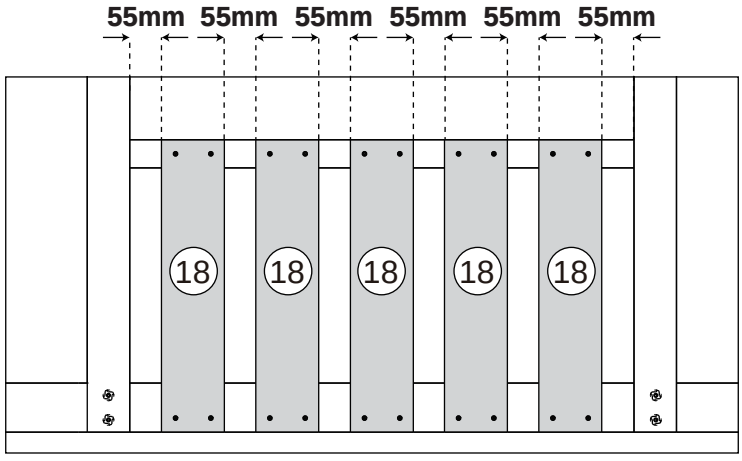

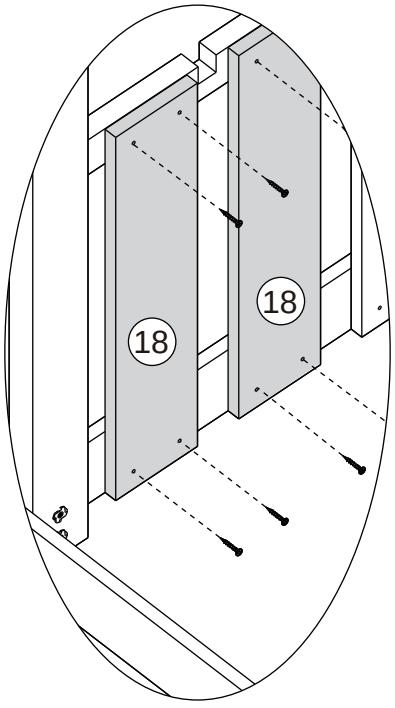

Step
Étape
Paso
8

	ZD6 x 2	27 x 1
	LZS6 x 2	
	Z6-38 x 1	
	Z6-48 x 1	

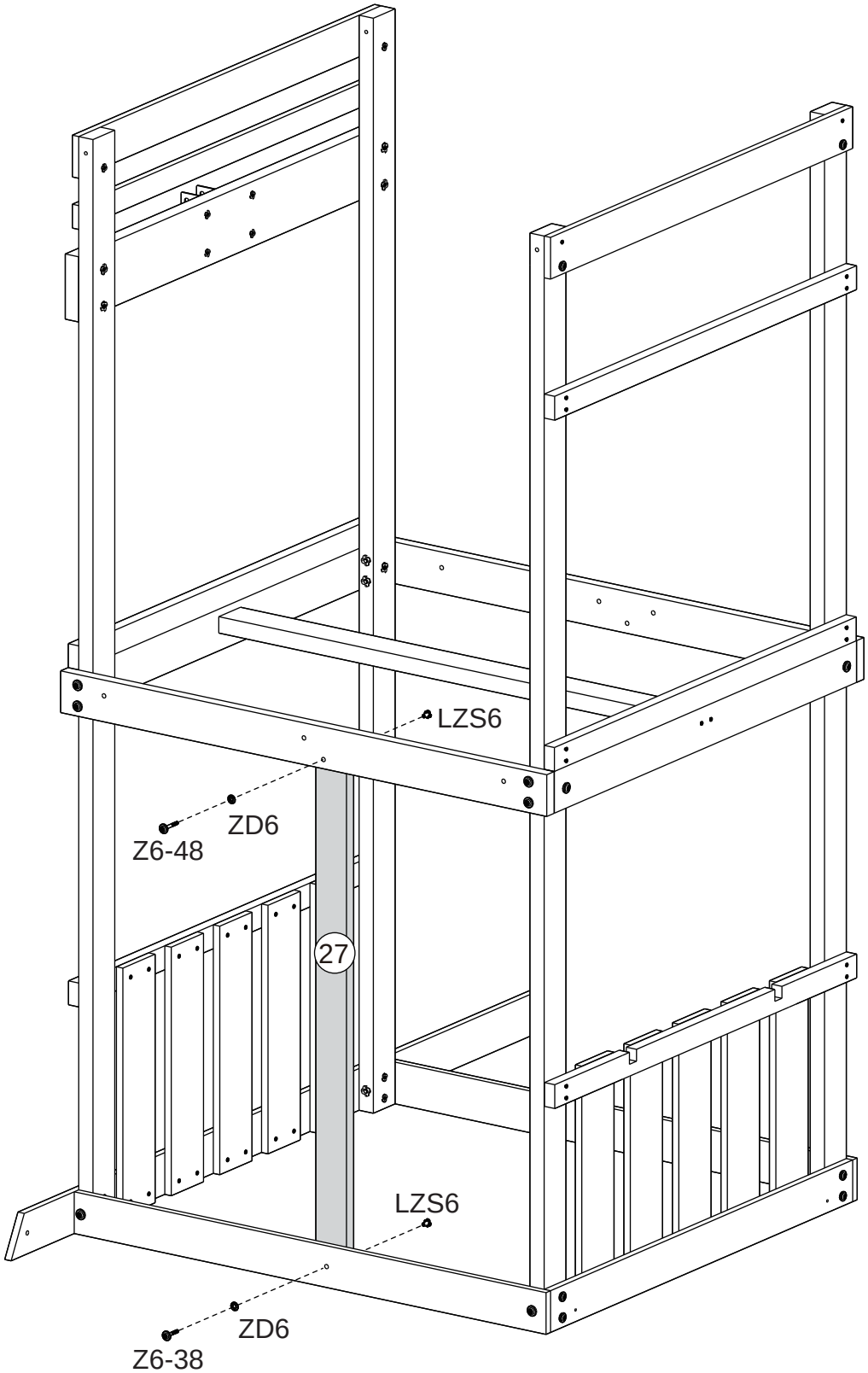

Step
Étape
Paso
9

P45 x 4

25 x 1

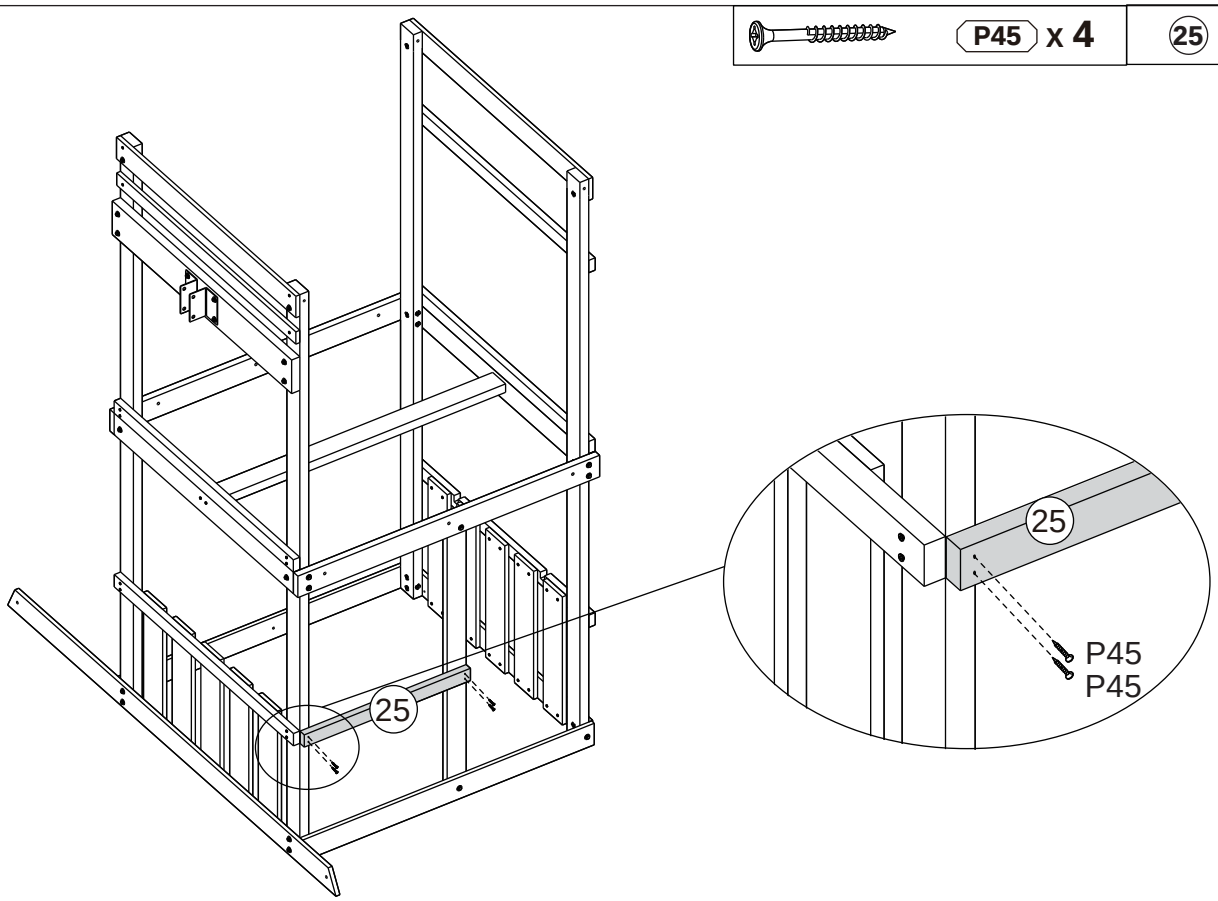

Step
Étape
Paso
10

P45 x 1

30 x 1

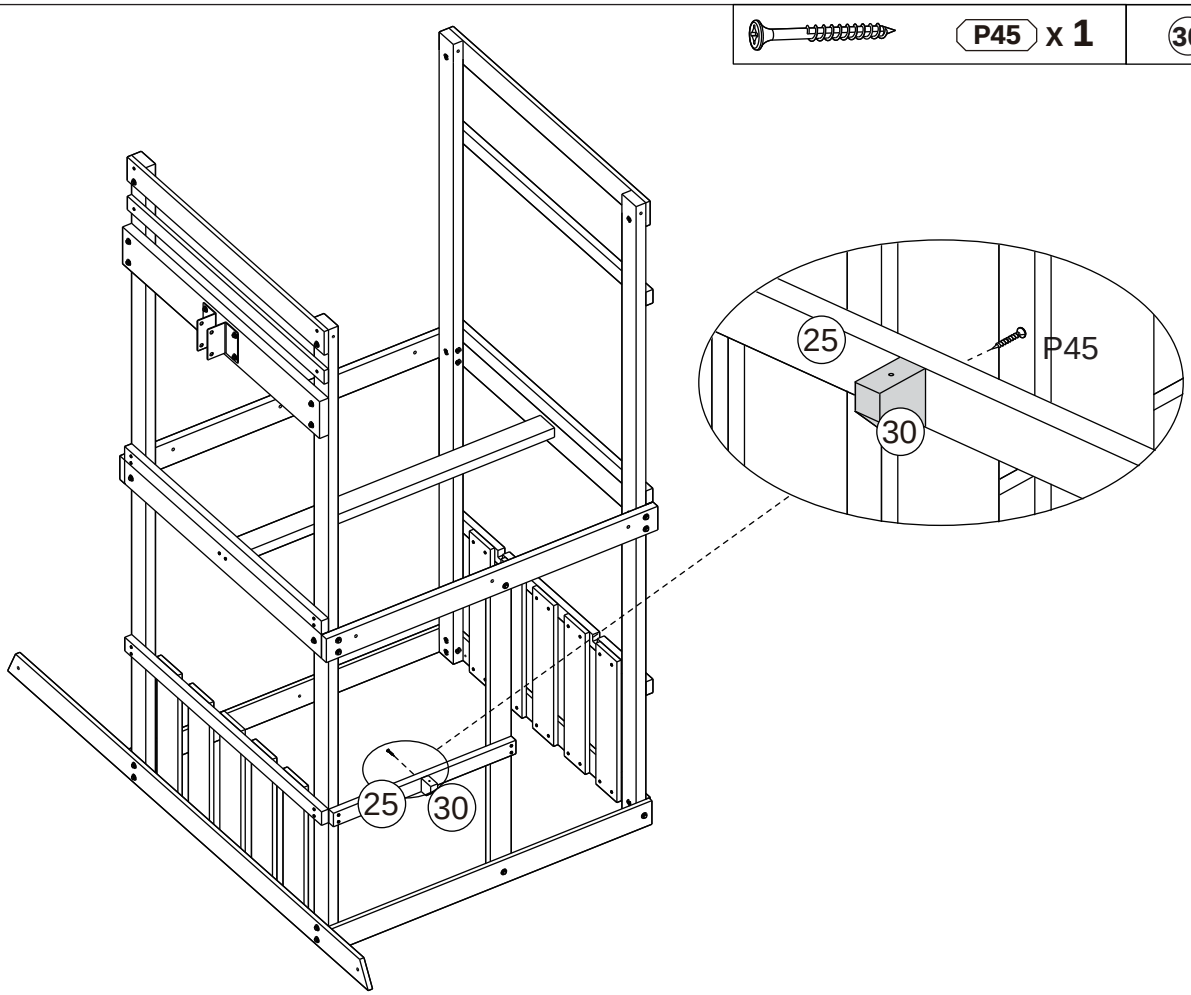

Step
Étape
Paso
11

P28 x 12 | 18 x 3

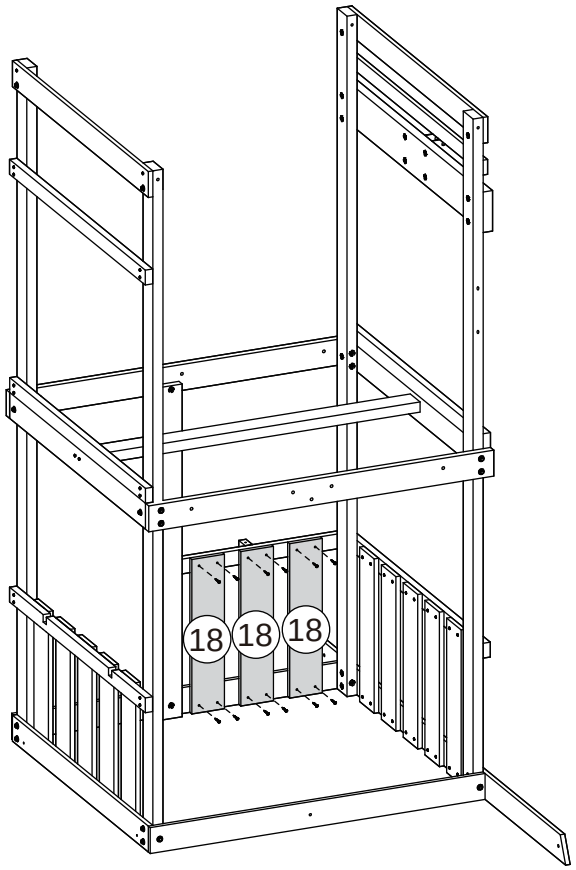

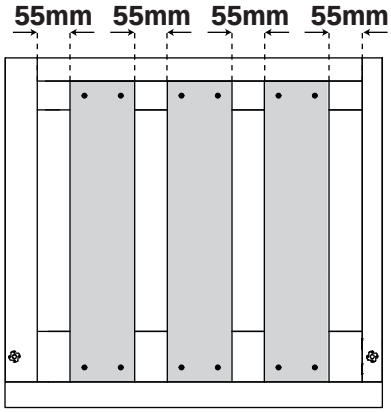

Step
Étape
Paso
12

P35 x 4 | 28 x 1

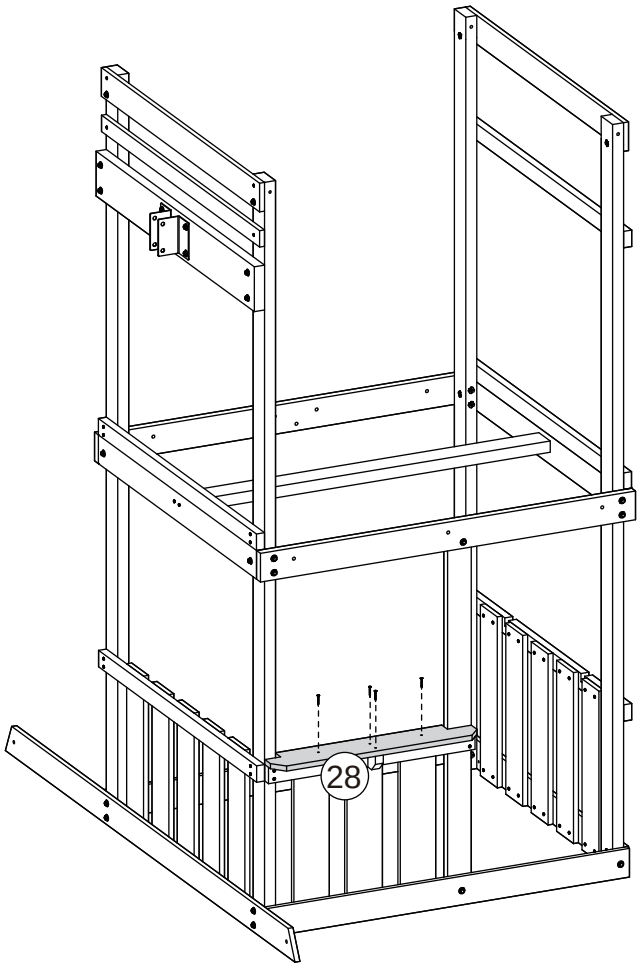

Step
Étape
Paso
13

P45 x 2	19 x 2

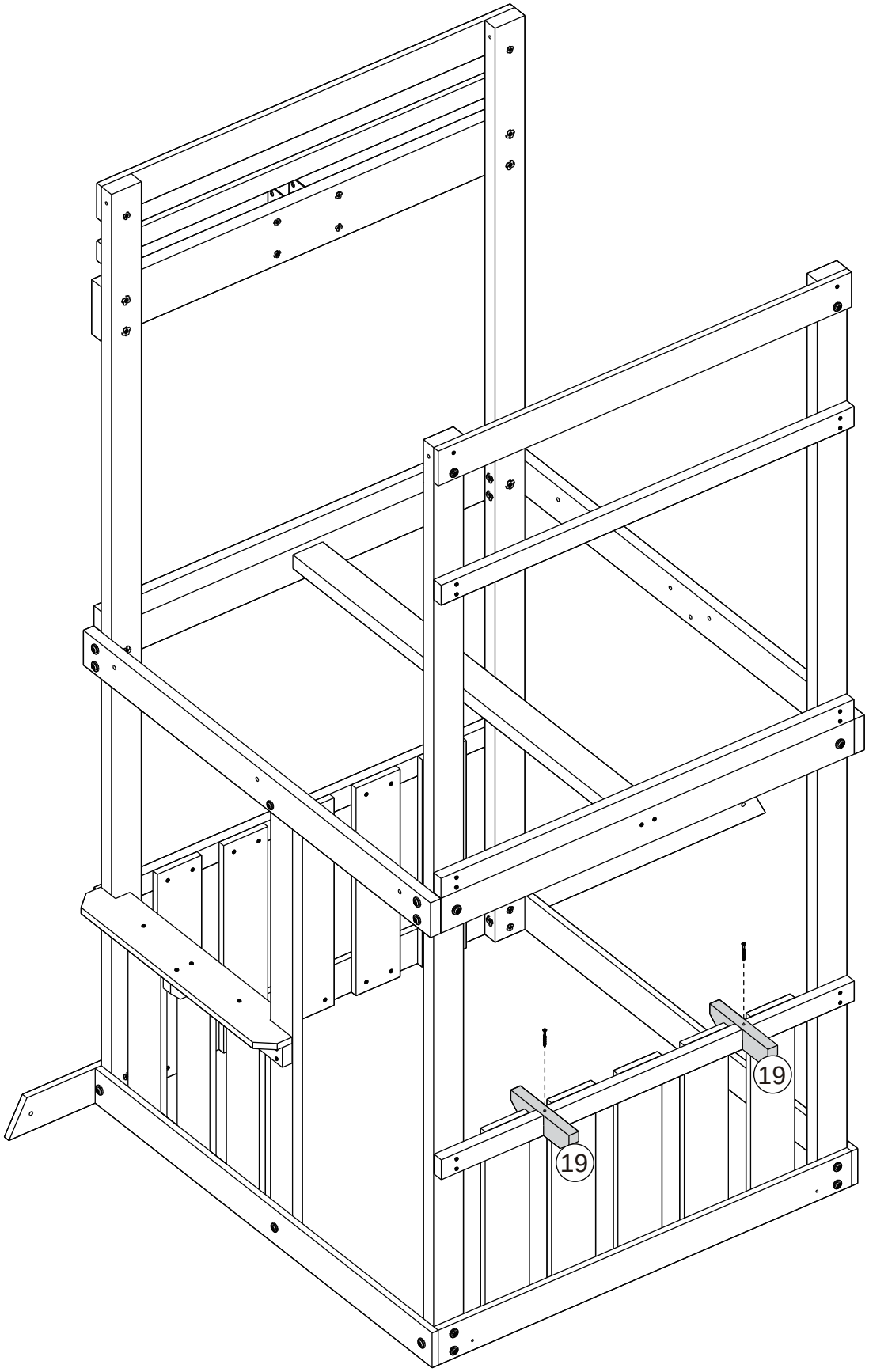

Step
Étape
Paso
14

P35 x 12

20 x 1

21 x 1

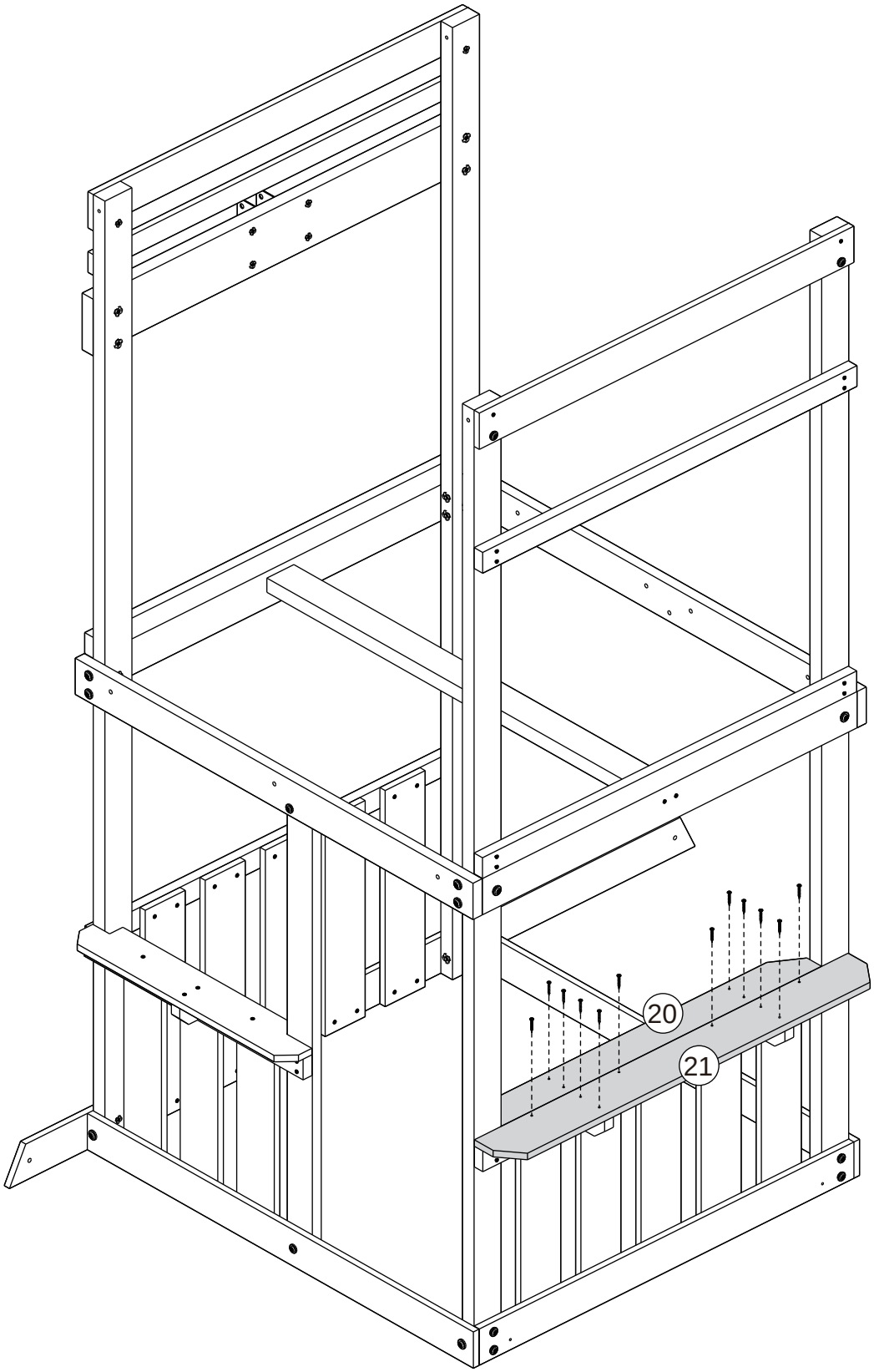

Step
Étape
Paso
15

	ZD8 x 7	22 x 1
	LZS8 x 7	23 x 1
	Z8-58 x 7	24 x 1

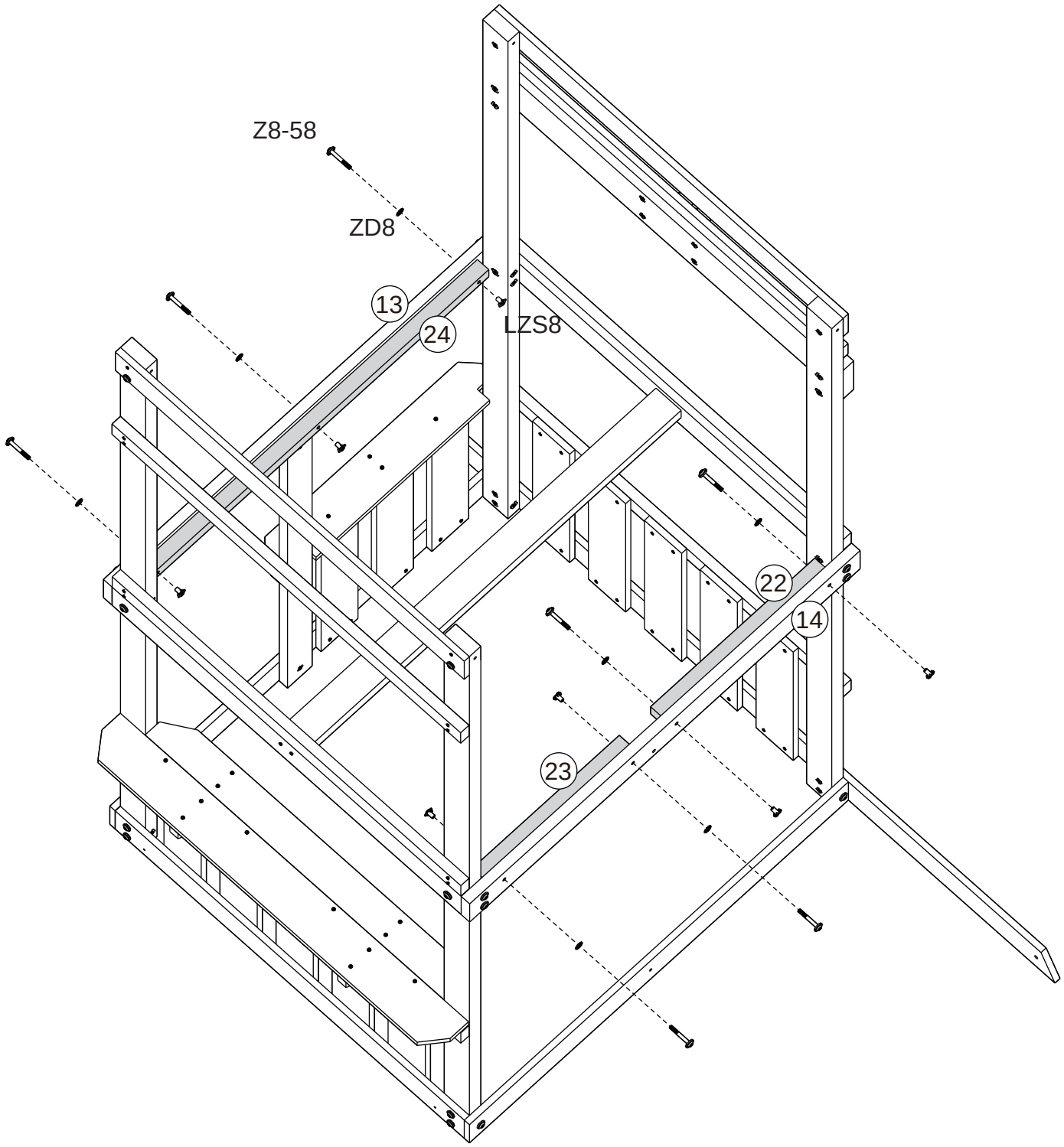

Step
Étape
Paso
16

	ZD6 x 2	71 x 1
	LZS6 x 2	
	Z6-38 x 1	
	Z6-48 x 1	

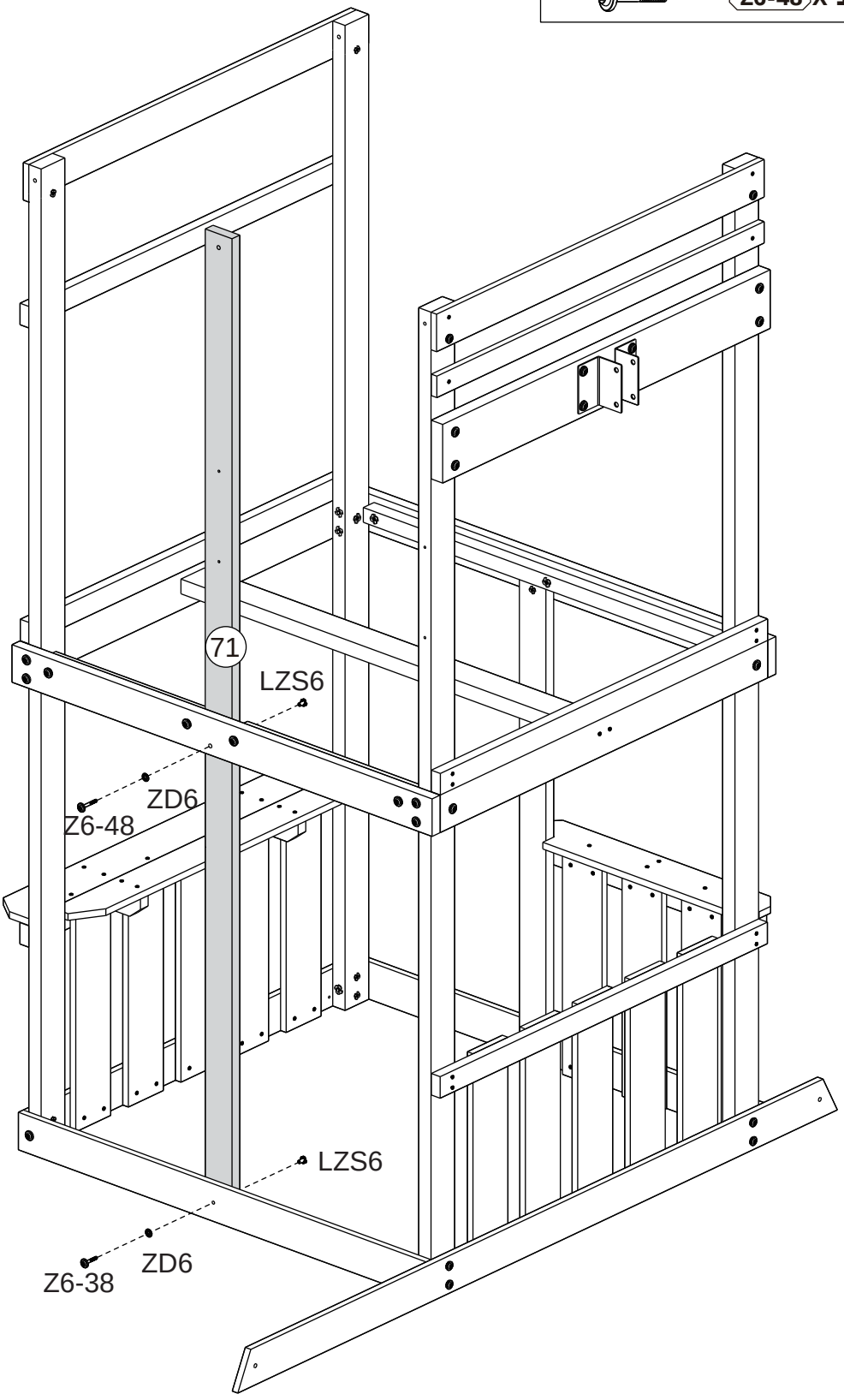

Step
Étape
Paso
17

P35 x 42

33 x 1

34 x 2

35 x 7

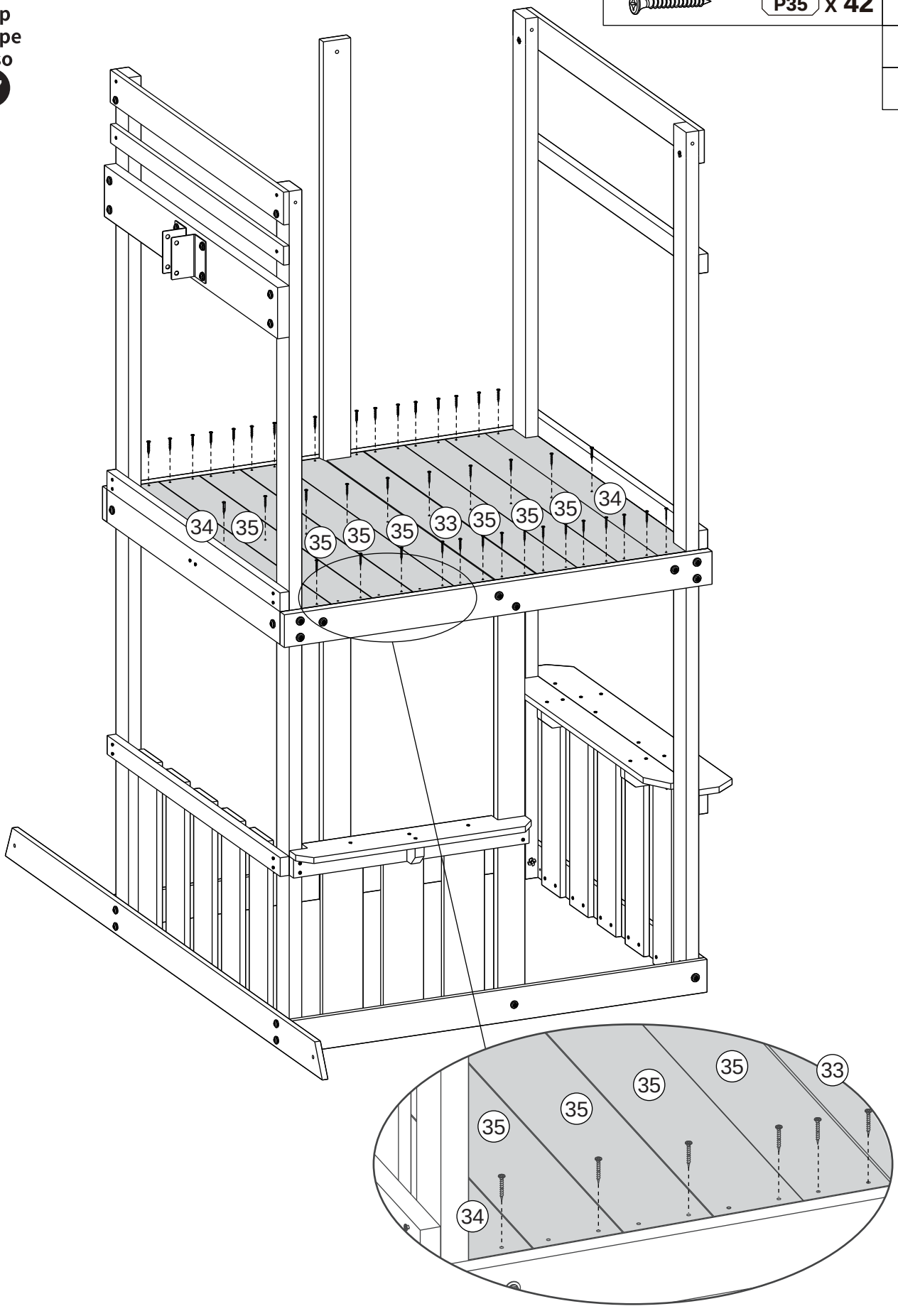

Step
Étape
Paso
18

P28 x 20 | 36 x 5

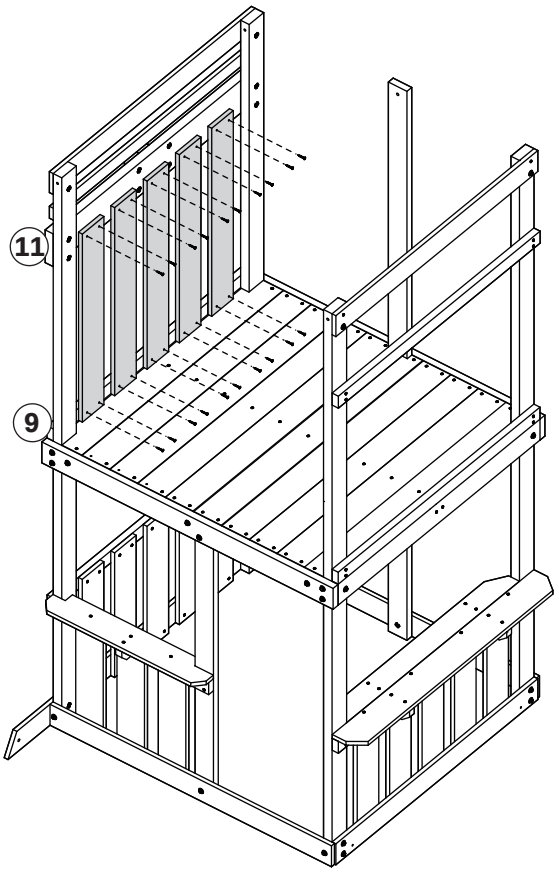

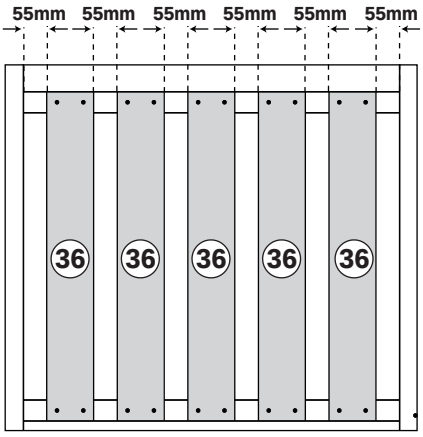

Step
Étape
Paso
19

P28 x 20 | 36 x 5

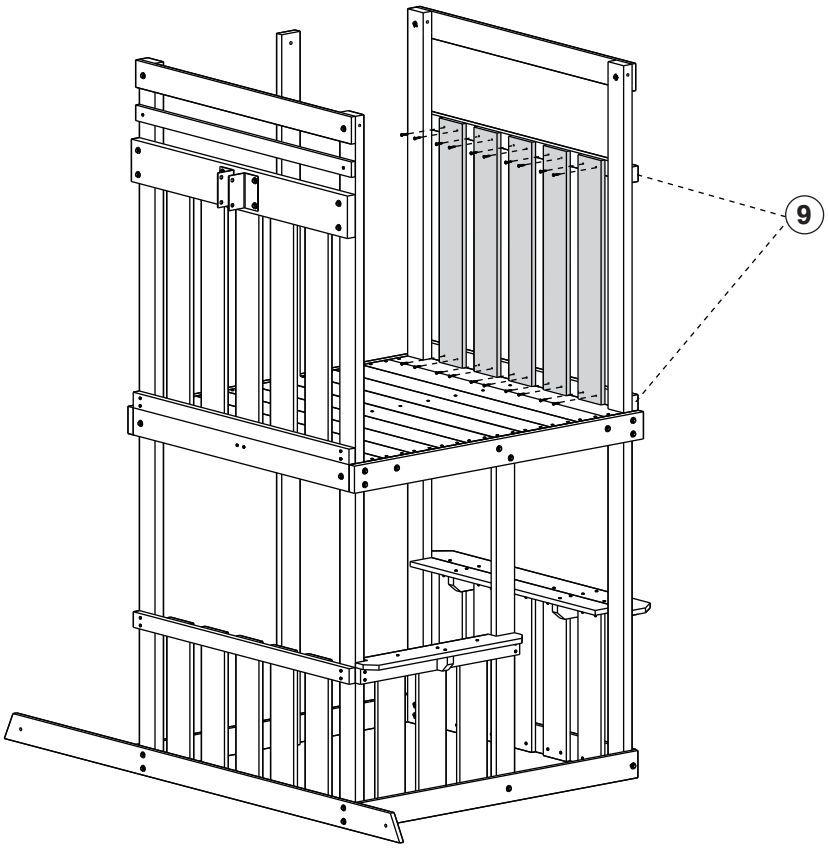

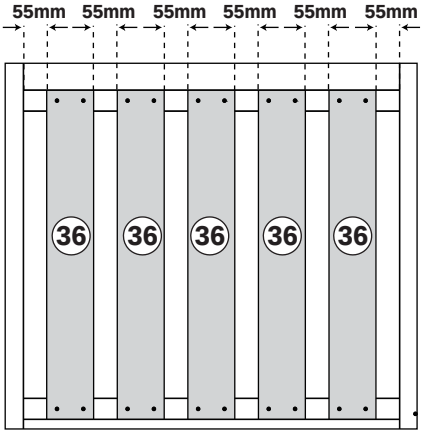

Step
Étape
Paso
20

P62 x 2	37 x 2
P75 x 2	38 x 2

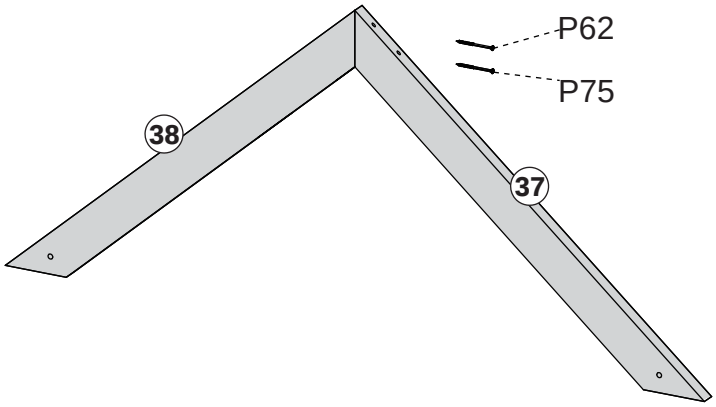

Complete this step twice

Step
Étape
Paso
21

P75 x 4	39 x 2
	40 x 2
	41 x 4

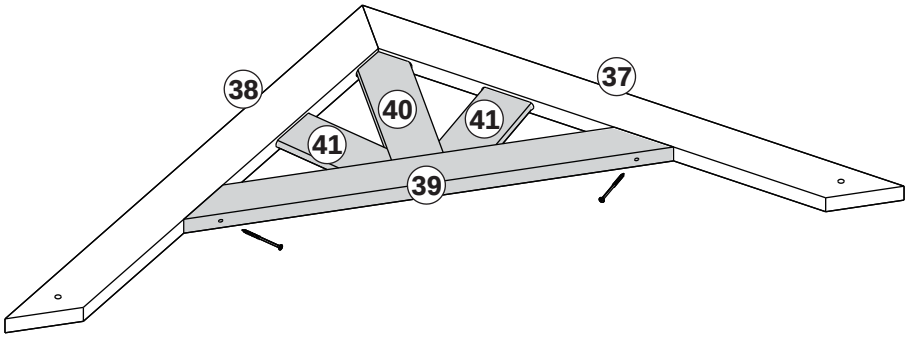

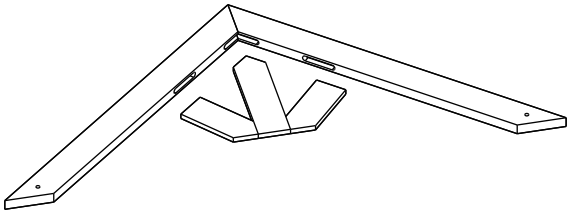

Complete this step twice

Step
Étape
Paso
22

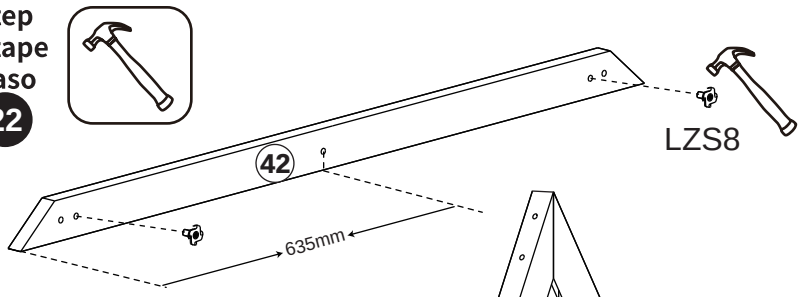

	ZD6 x 2	42 x 1
	LZS6 x 2	
	LZS8 x 2	
	Z6-48 x 2	

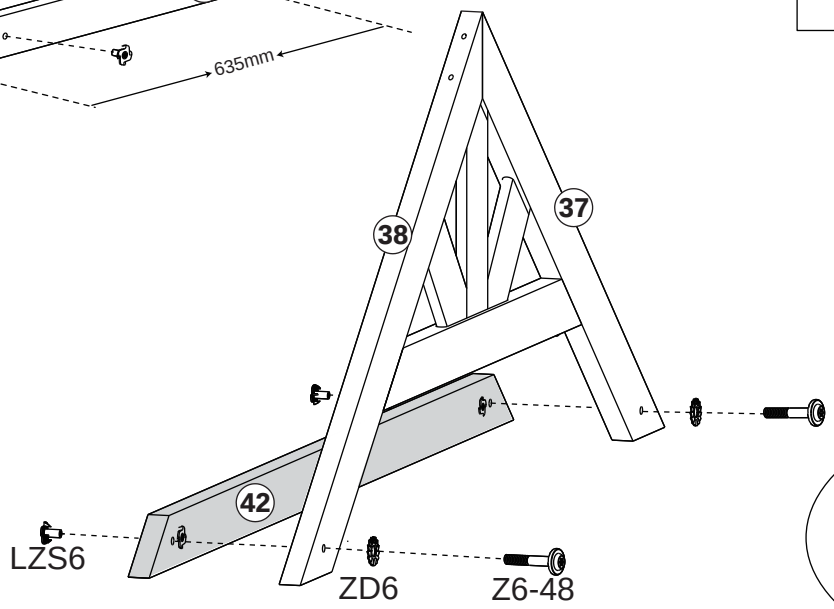

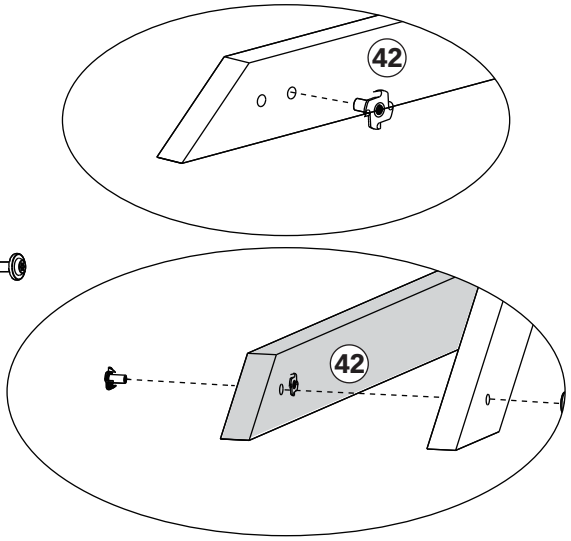

Step
Étape
Paso
23

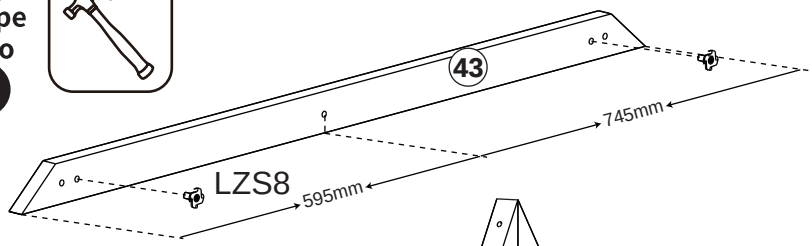

	ZD6 x 2	43 x 1
	LZS6 x 2	
	LZS8 x 2	
	Z6-48 x 2	

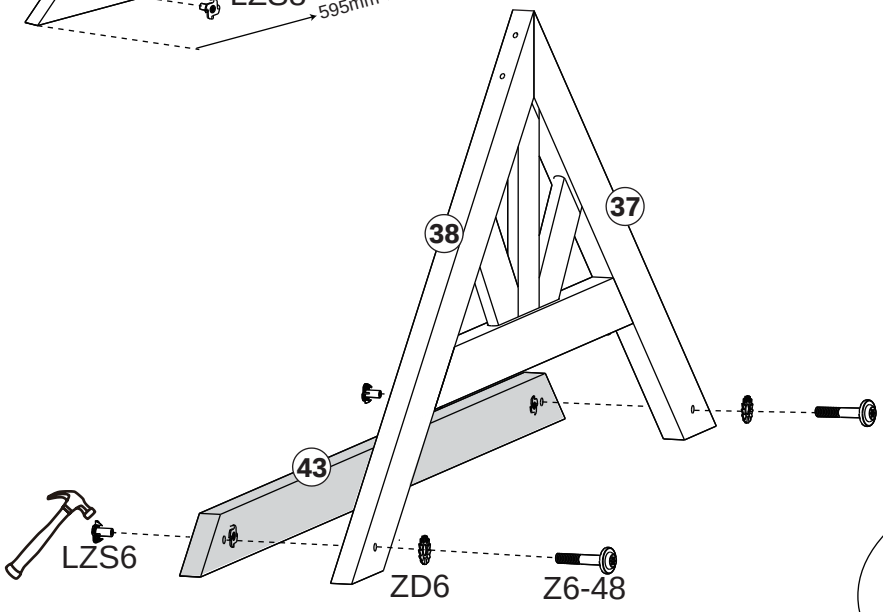

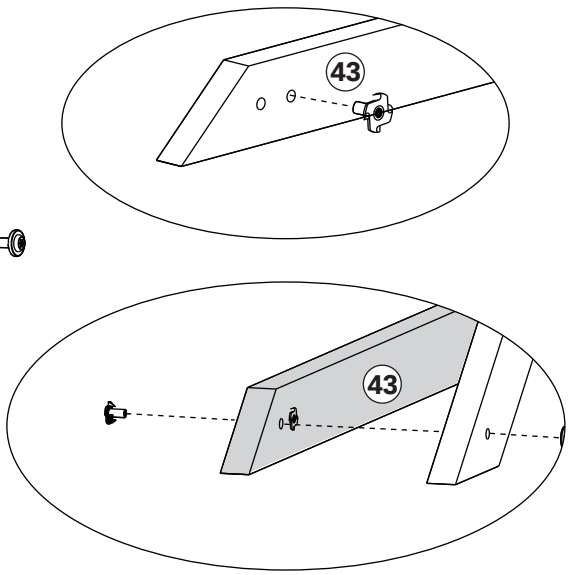

Step
Étape
Paso
24

P45 x 4	46 x 1
	45 x 1

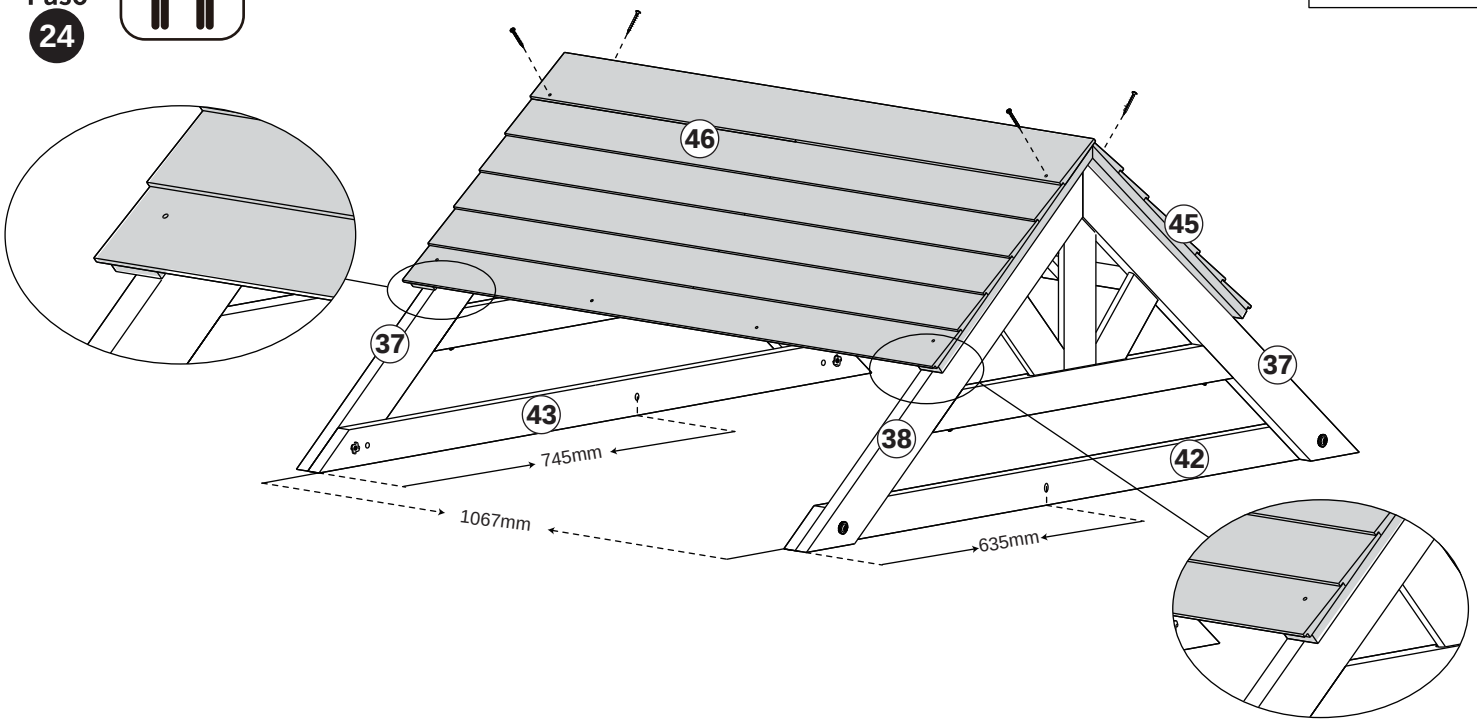

Step
Étape
Paso
25

P23 x 4	44 x 2
P45 x 12	

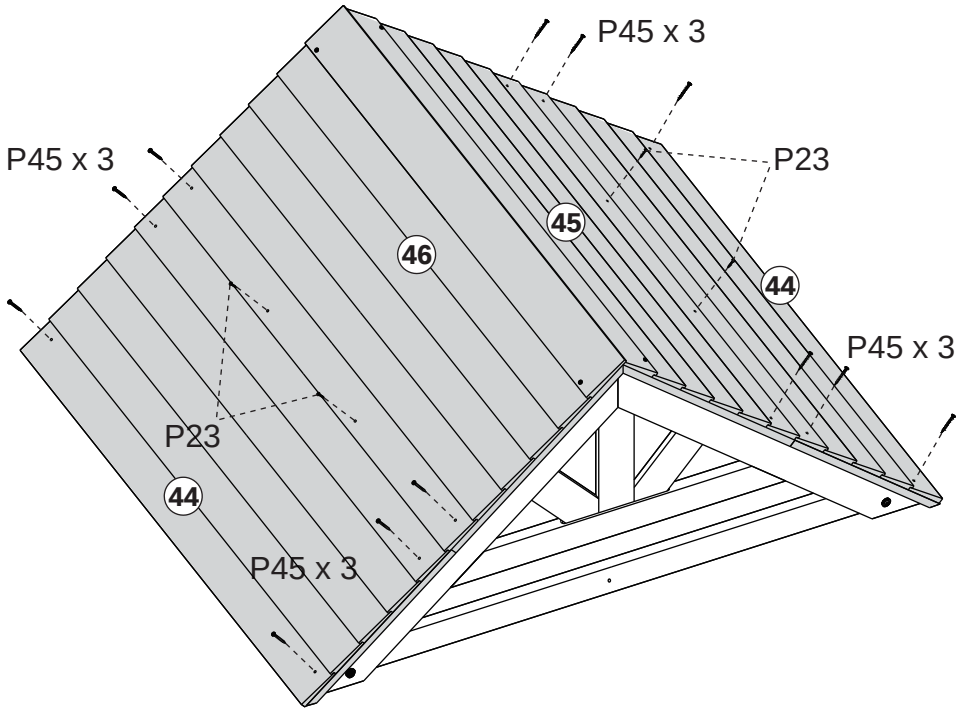

Step
Étape
Paso
26

TX16 x 8 | WJ0207 x 4

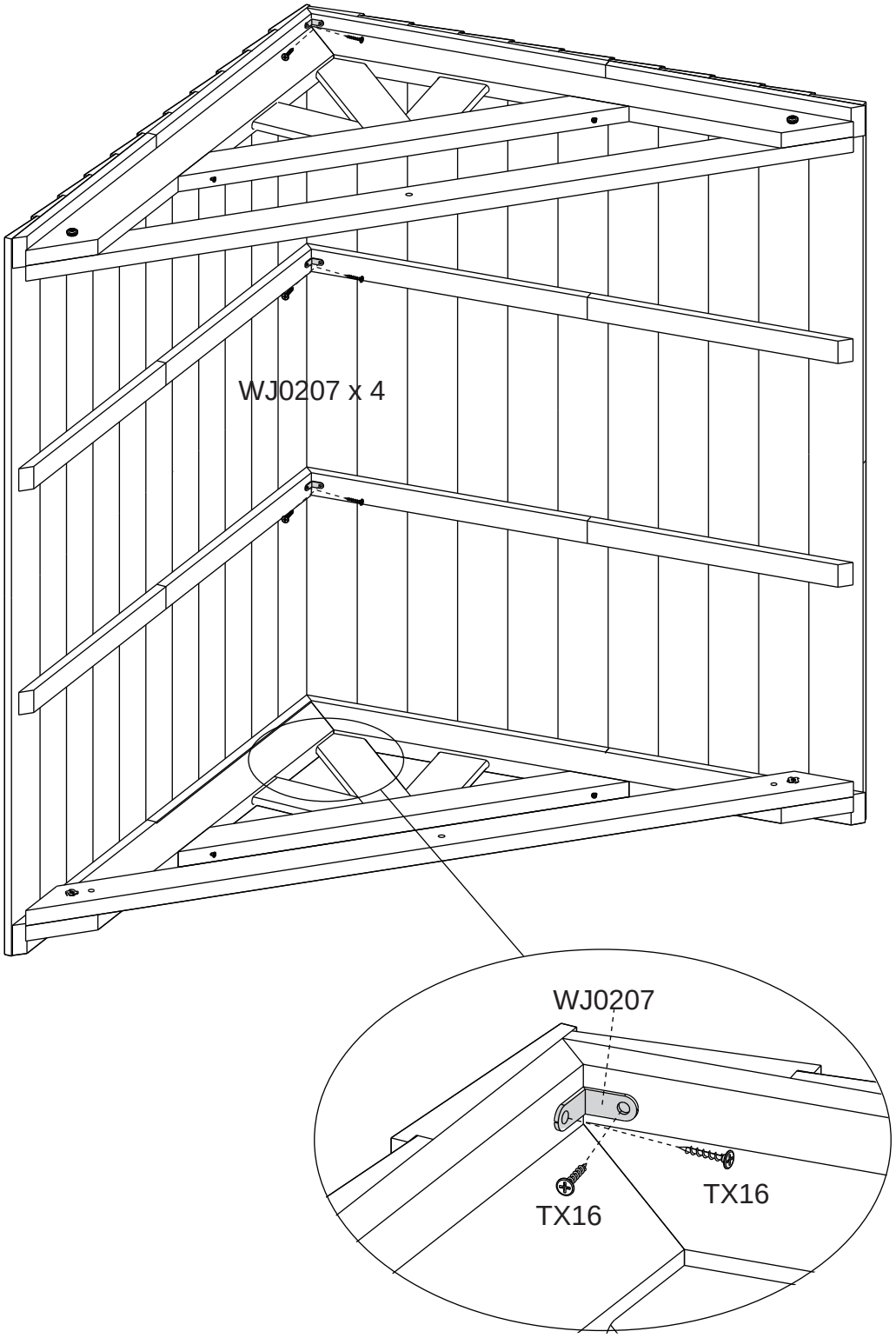

Step
Étape
Paso
27

ZD6	x 1
ZD8	x 4
LZS6	x 1
Z6-48	x 1
Z8-108	x 4

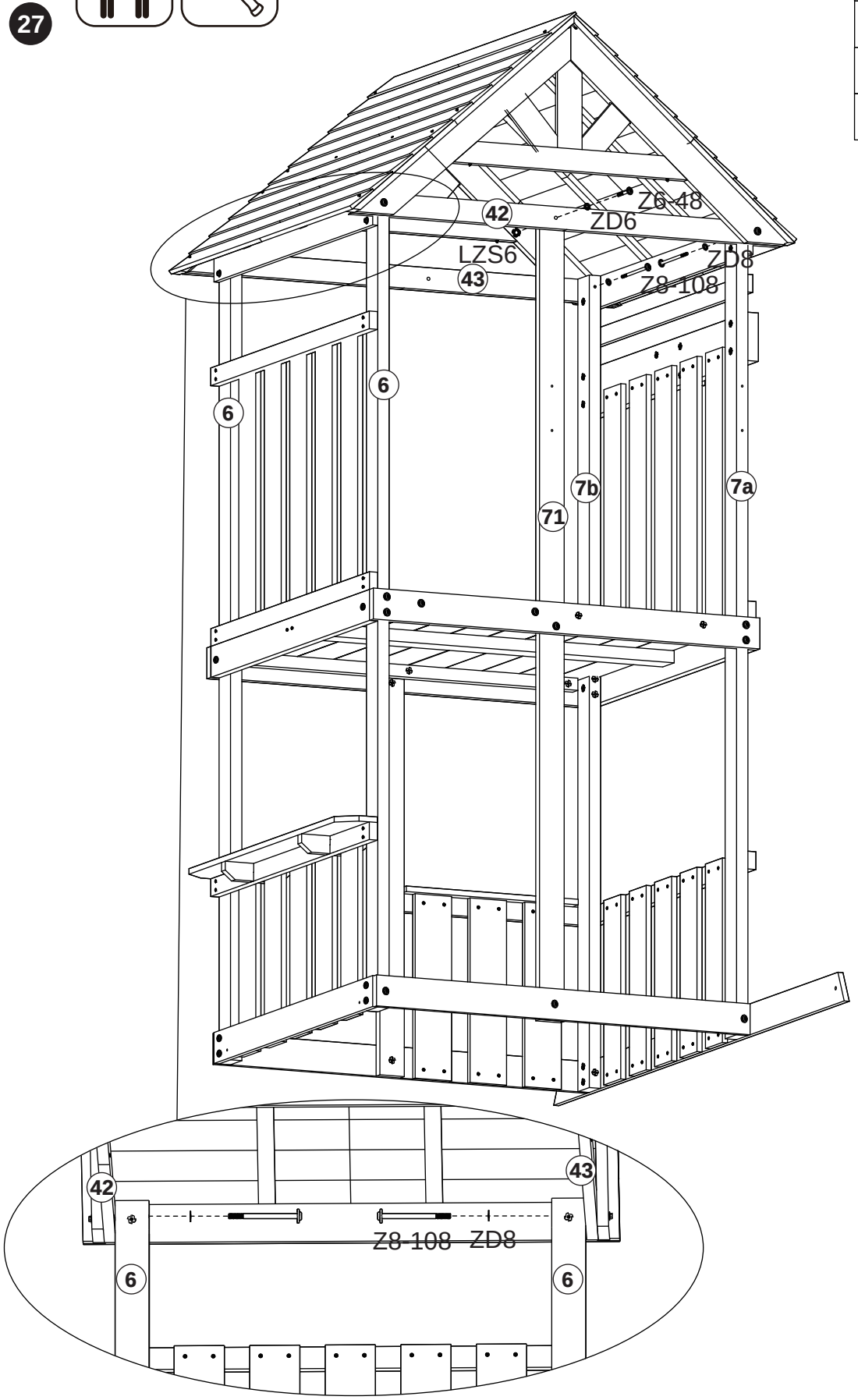

Step
Étape
Paso
28

P45 x 2	47 x 1
P75 x 3	

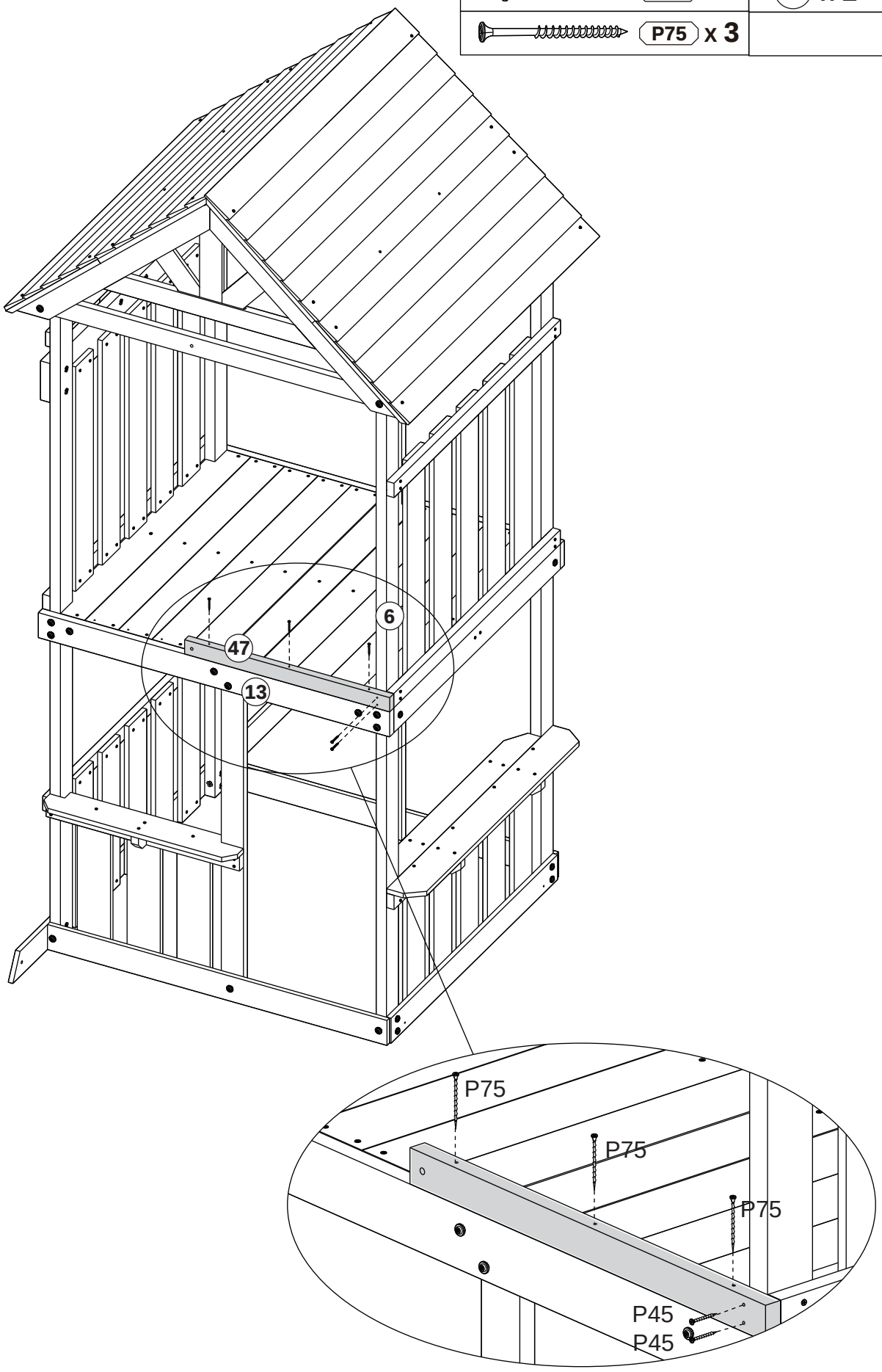

Step
Étape
Paso
29

	ZD6 x 2	48 x 1
	LZS6 x 2	
	Z6-48 x 2	

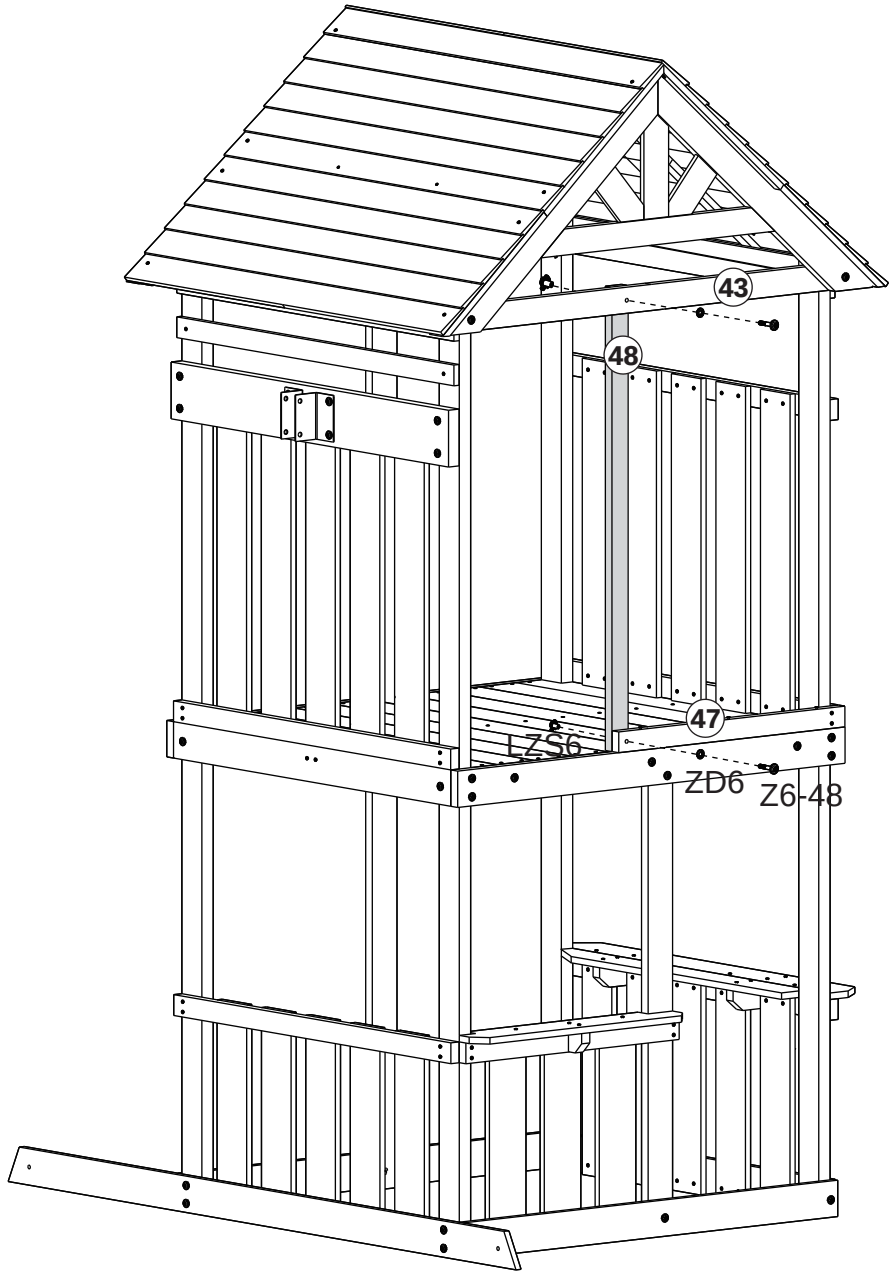

Step
Étape
Paso
30

P45 x 4 | 50 x 1

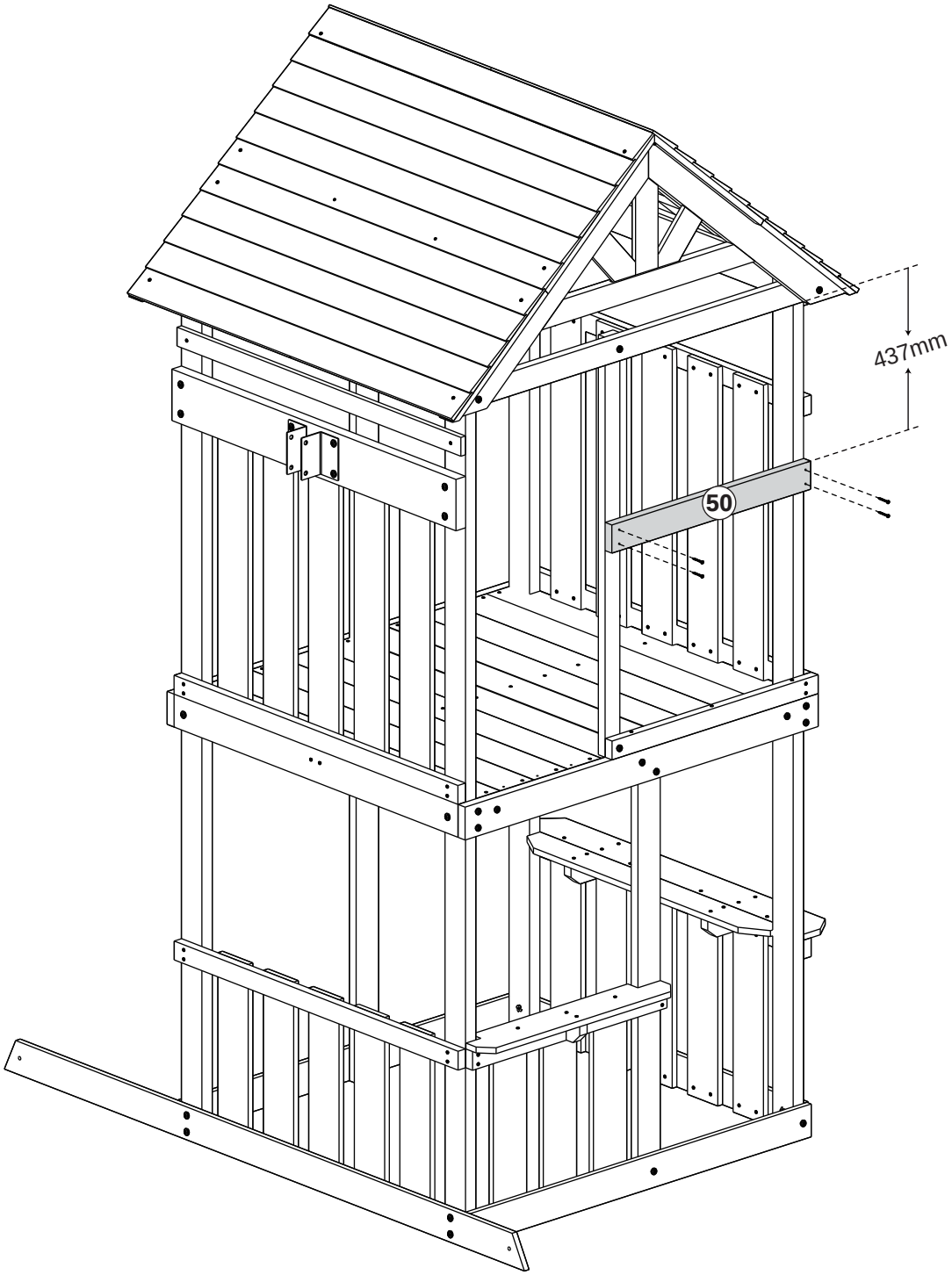

Step
Étape
Paso
31

P28 x 12 | 59 x 2

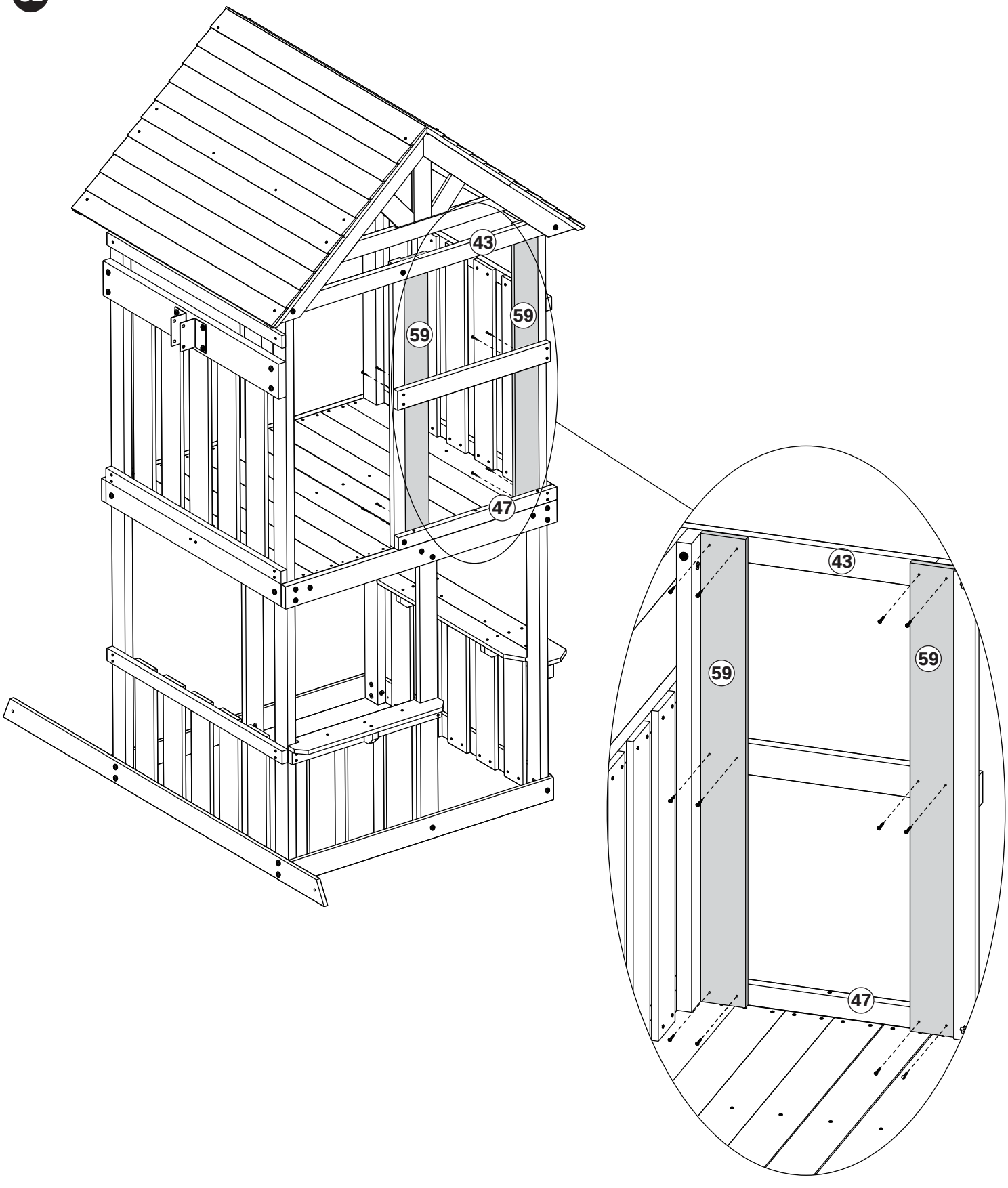

Step
Étape
Paso
32

P28 x 8	51 x 2

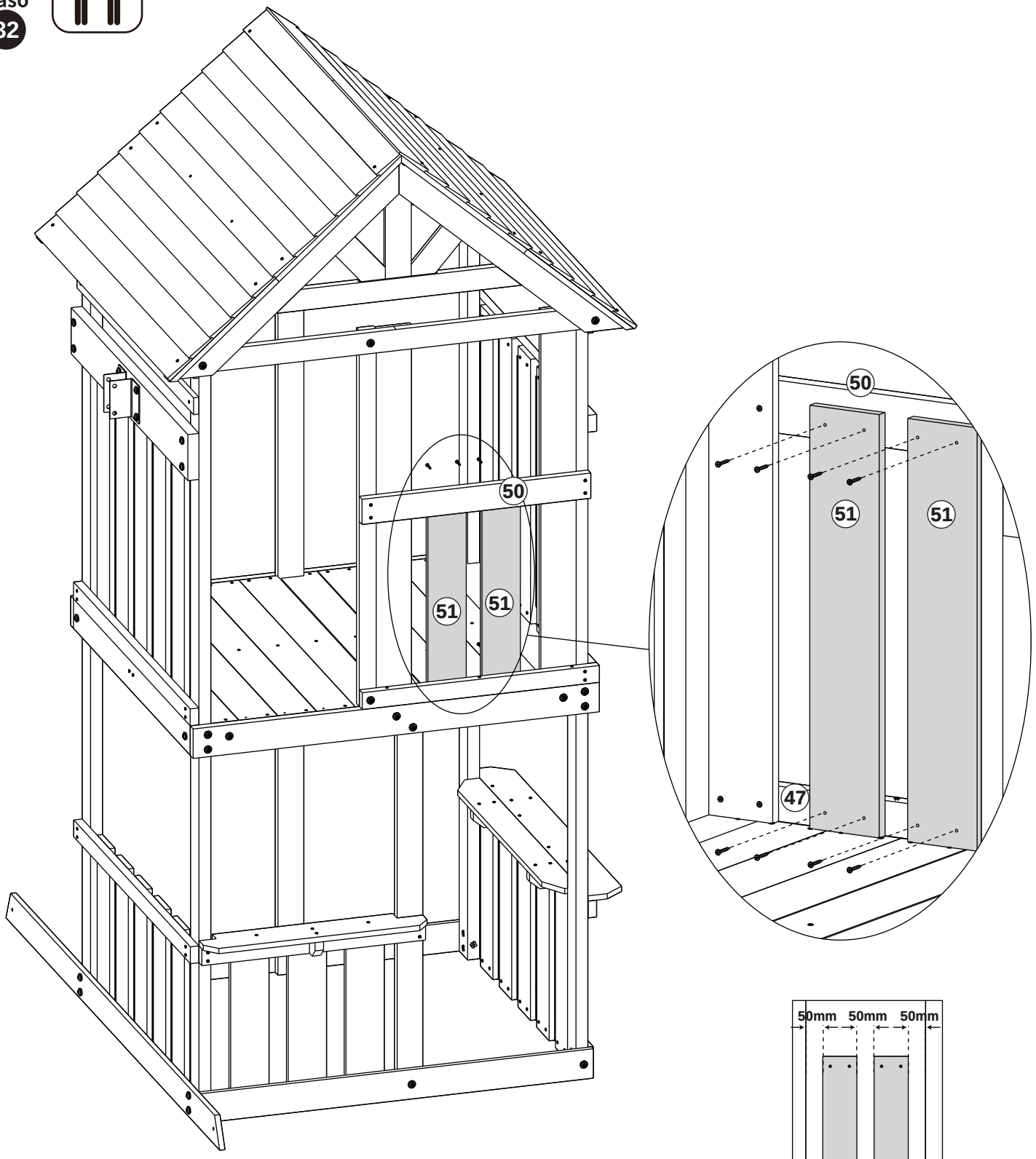

Step
Étape
Paso
33

P45 x 4 | 52 x 1

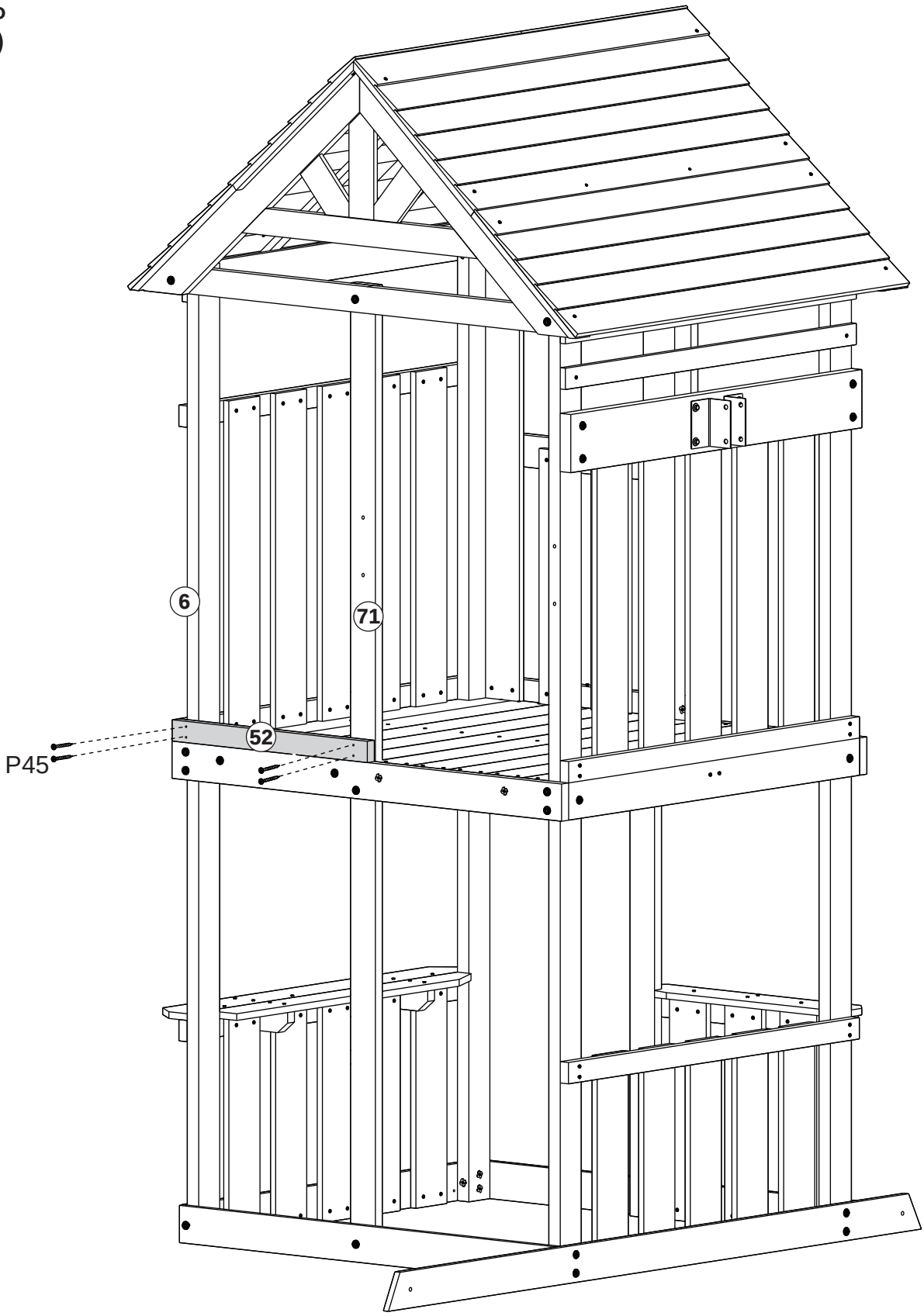

Step
Étape
Paso
34

	P28 x 8	49 x 2

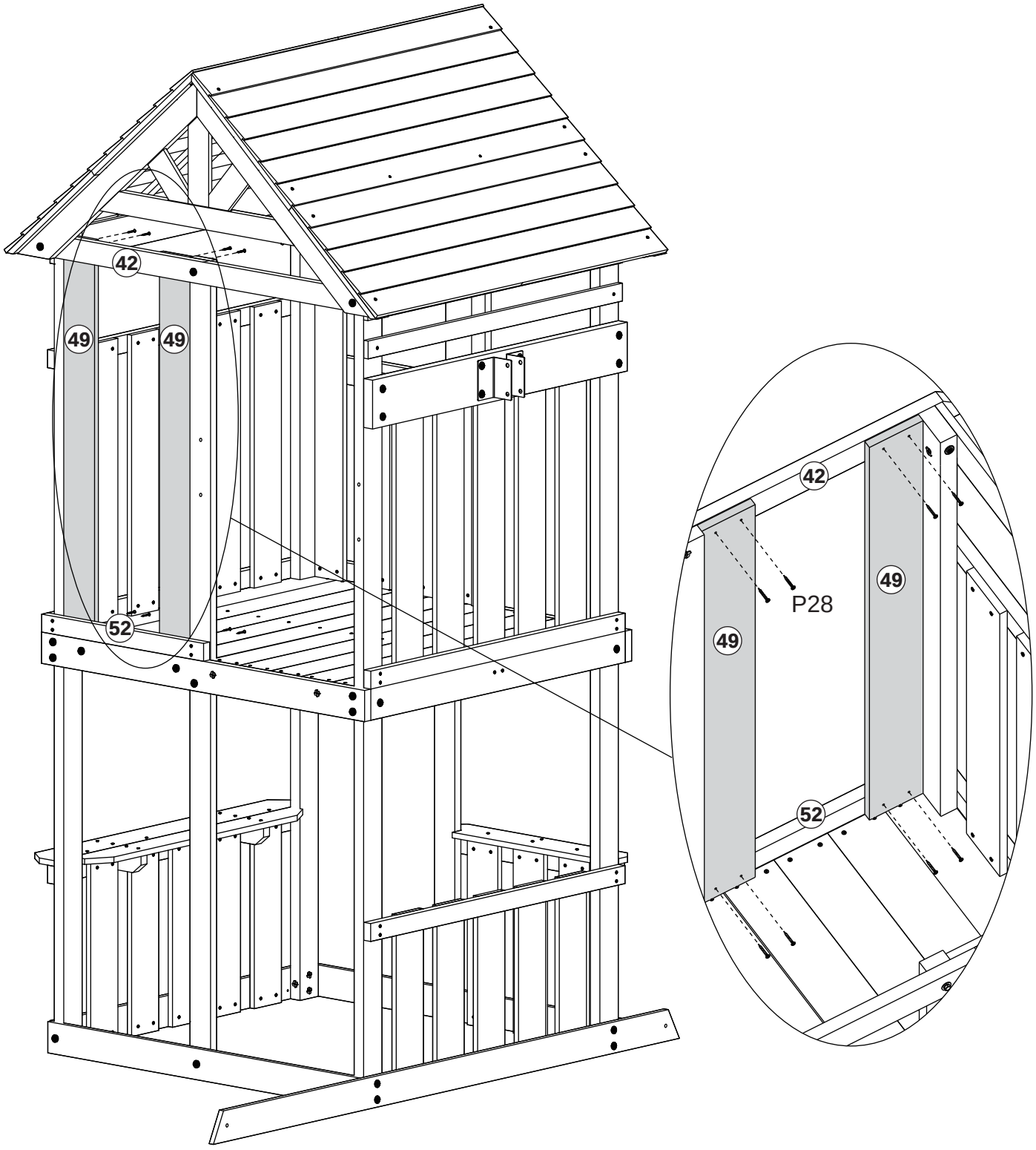

Step
Étape
Paso
35

P28 x 4	53 x 2

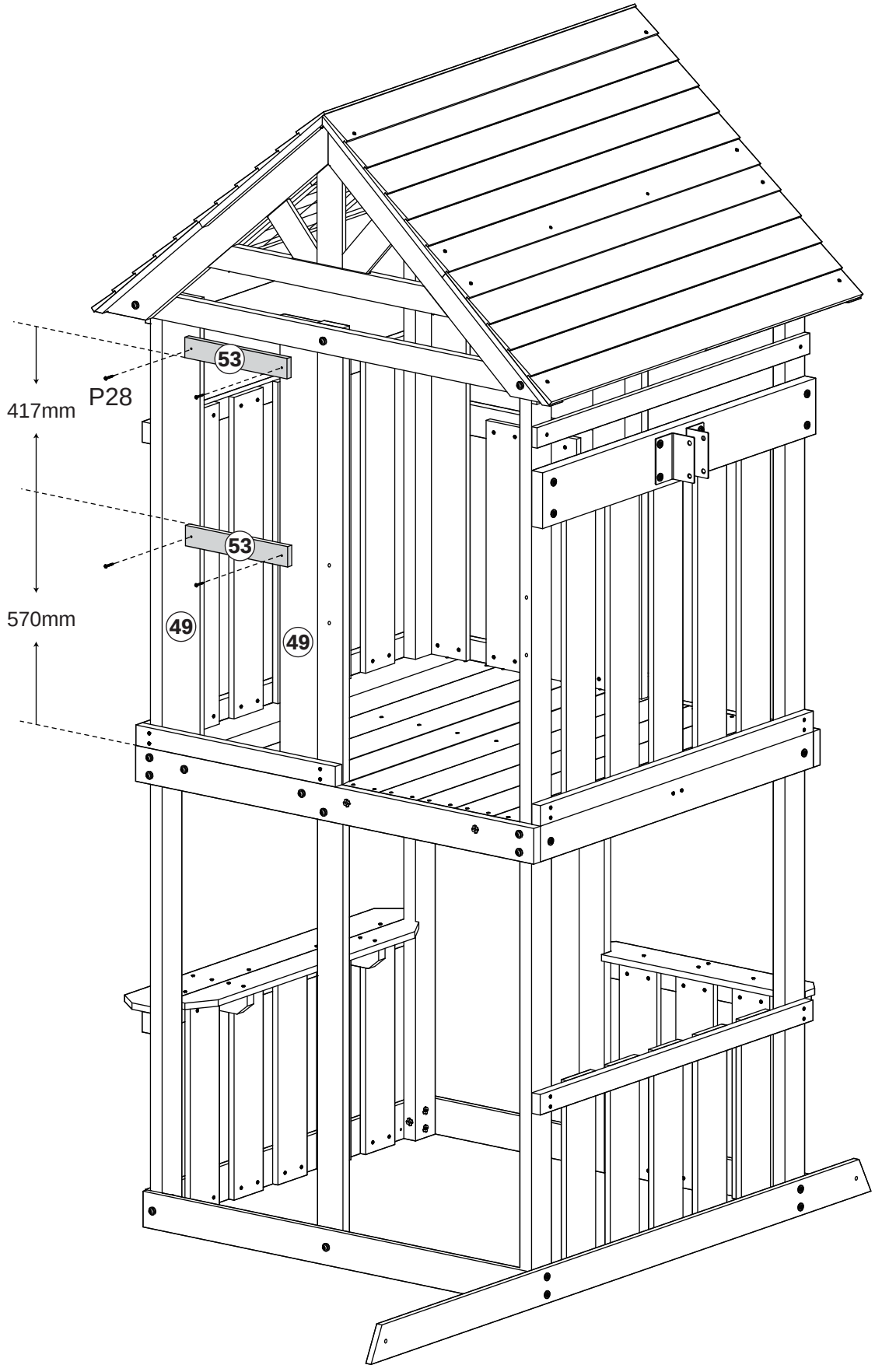

Step
Étape
Paso
36

P28 x 16	54 x 2
	55 x 2

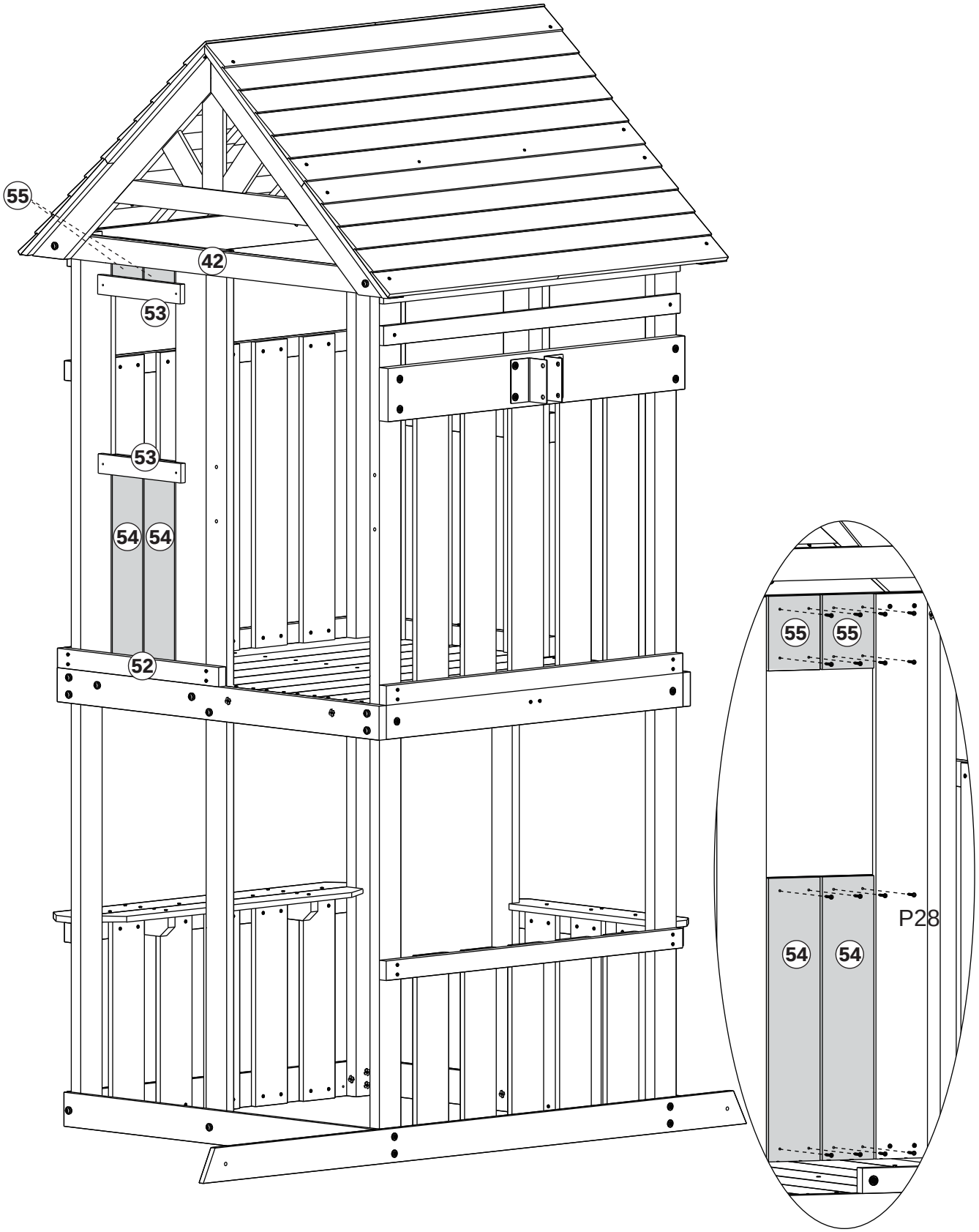

Step
Étape
Paso
37

TX16 x 6 | SJ0101 x 1

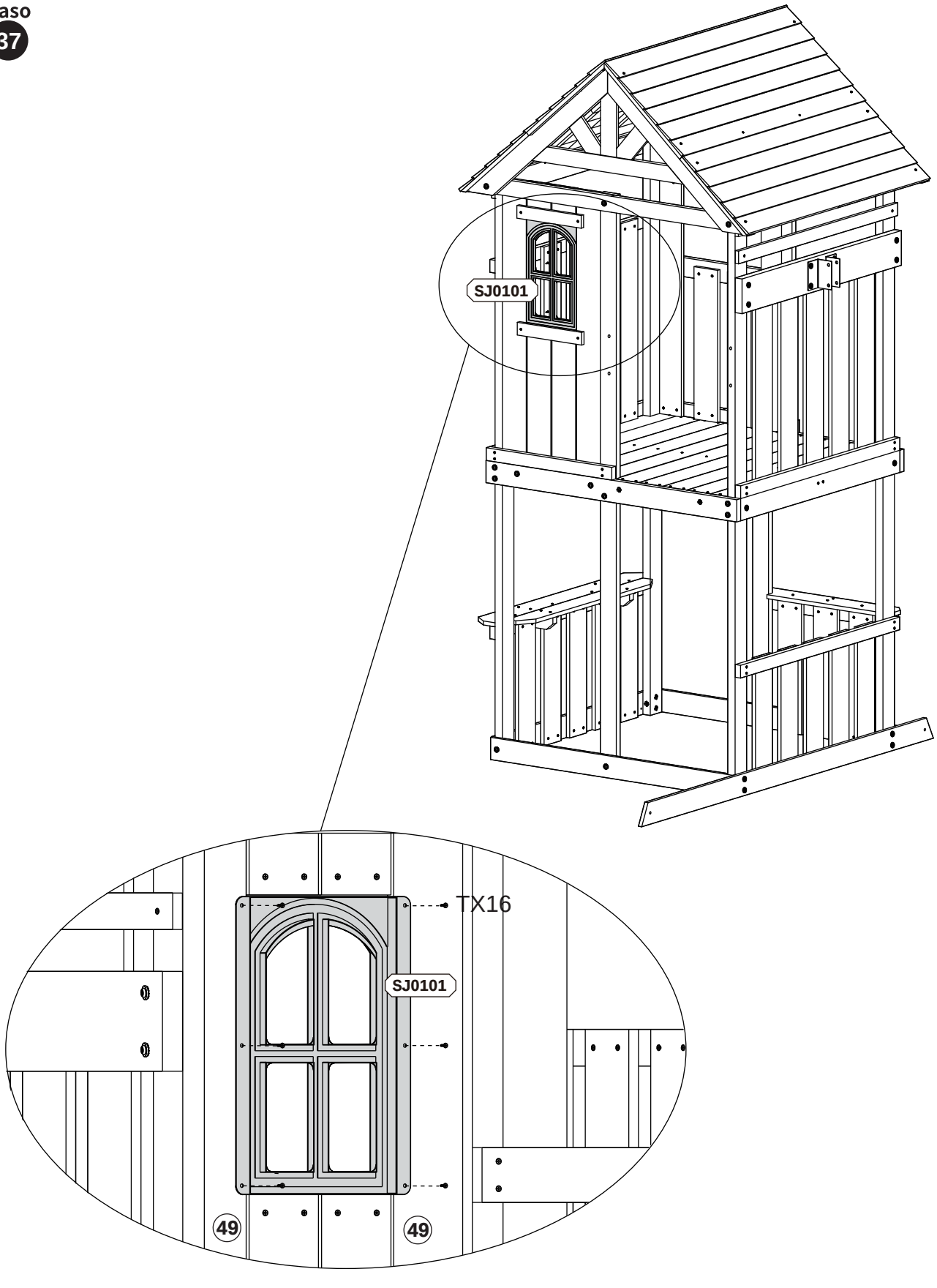

Step
Étape
Paso
38

P28 x 3	69 x 2
	SJ1946 x 3
	SJ0928 x 9

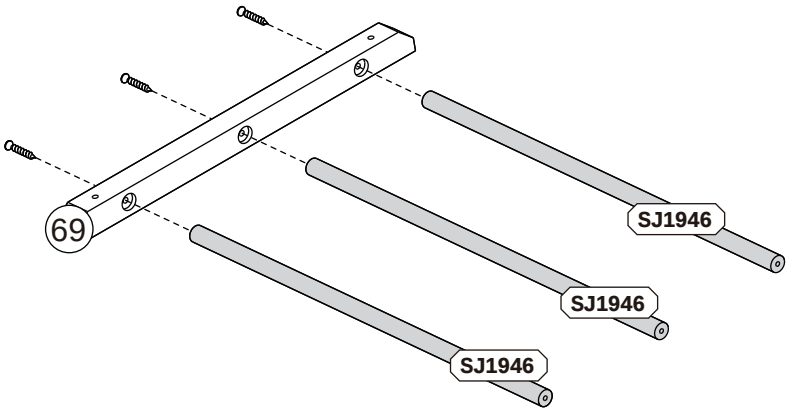

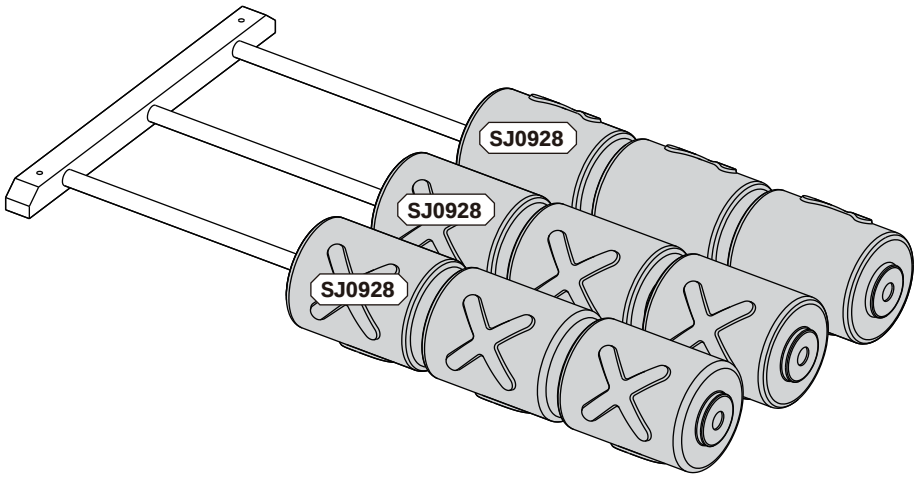

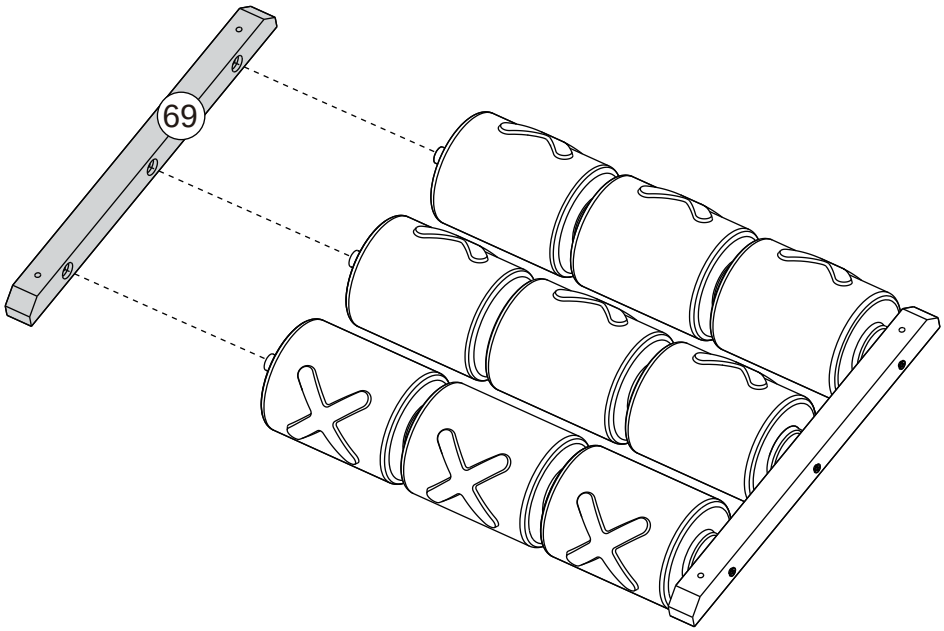

Step
Étape
Paso
39

P45 x 4

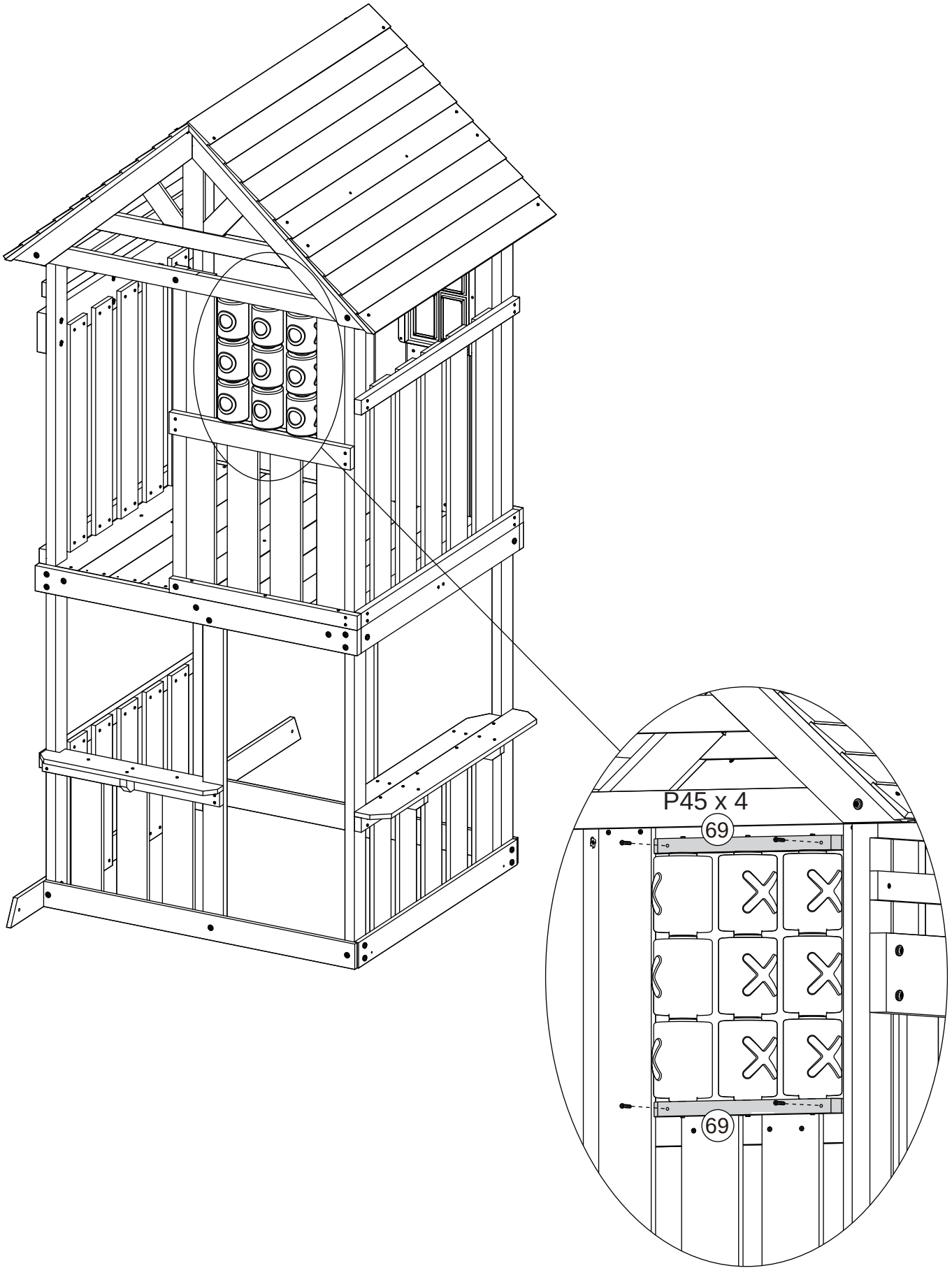

Step
Étape
Paso
40

ZJ6-32	x 4	SJ0914	x 1
ZJ6-45	x 1	SJ1402	x 2

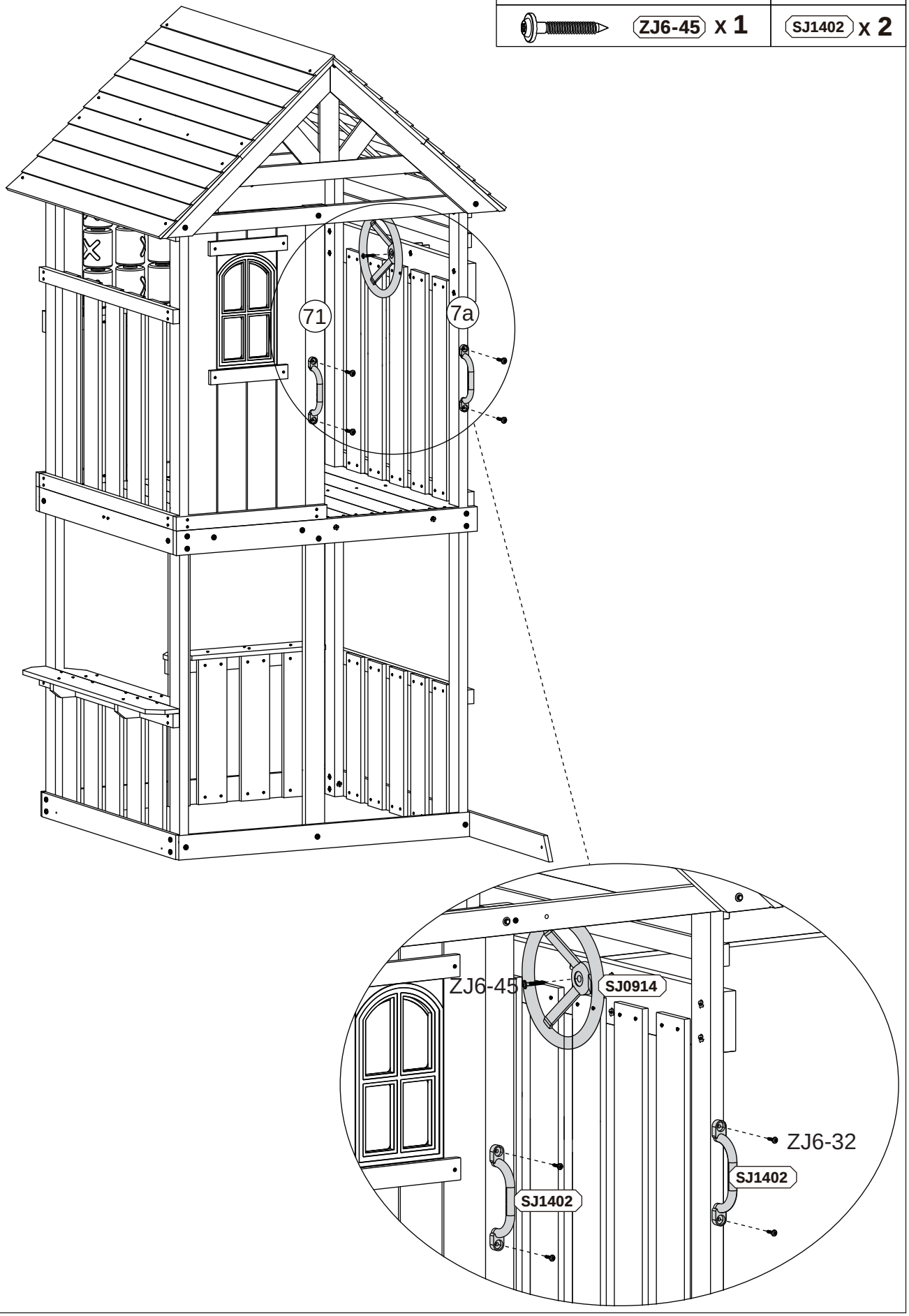

Step
Étape
Paso
41

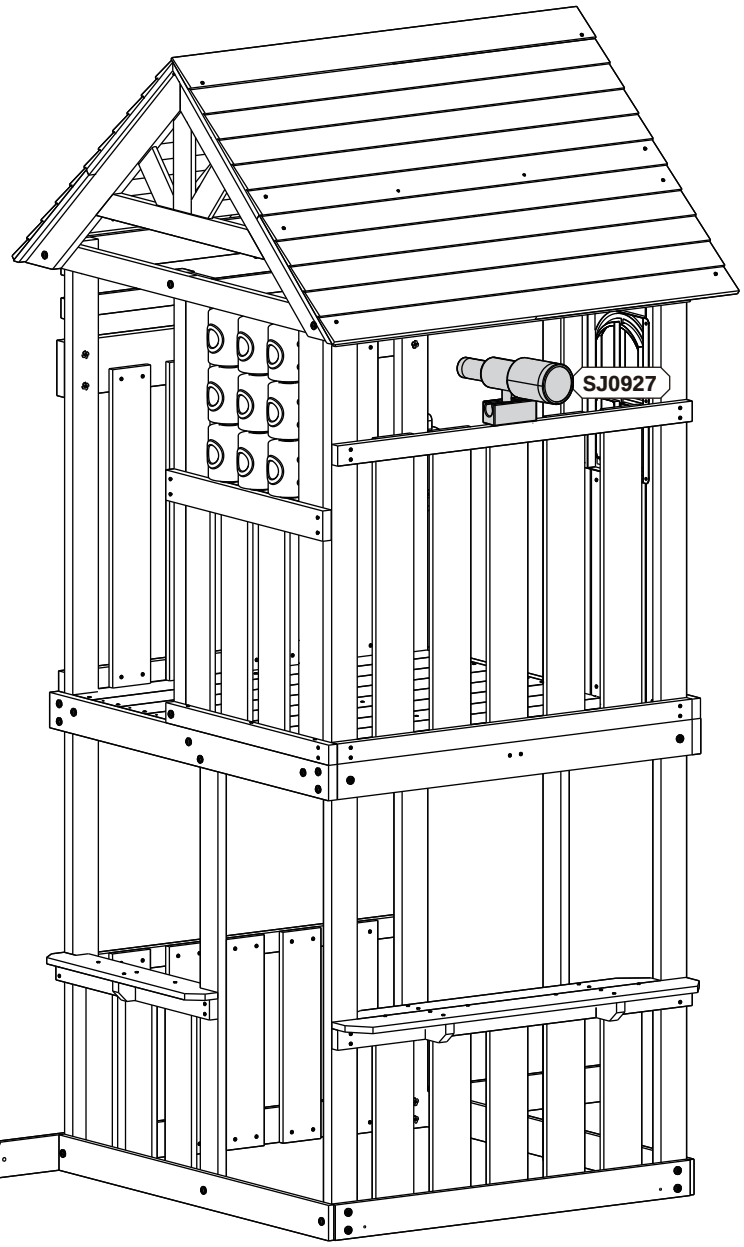

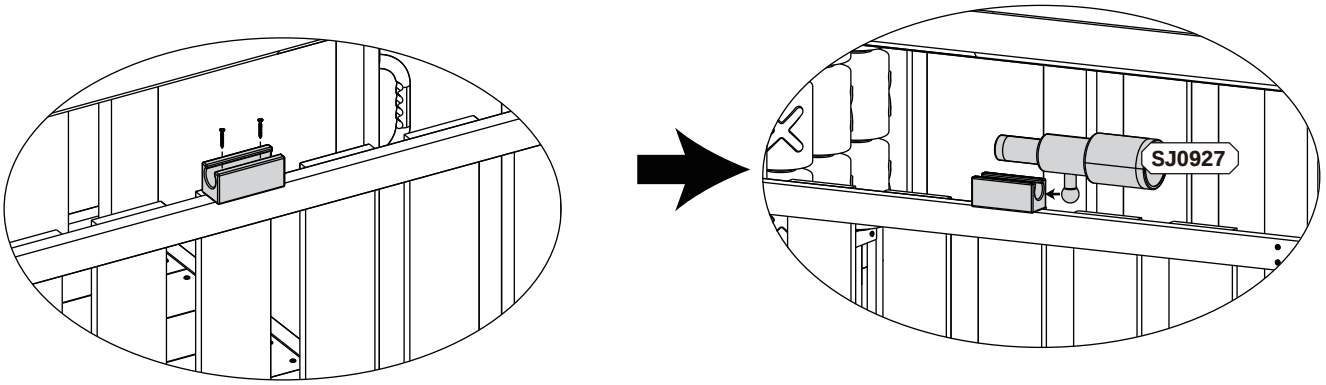

P35 x 2

SJ0927 x 1

Step
Étape
Paso
42

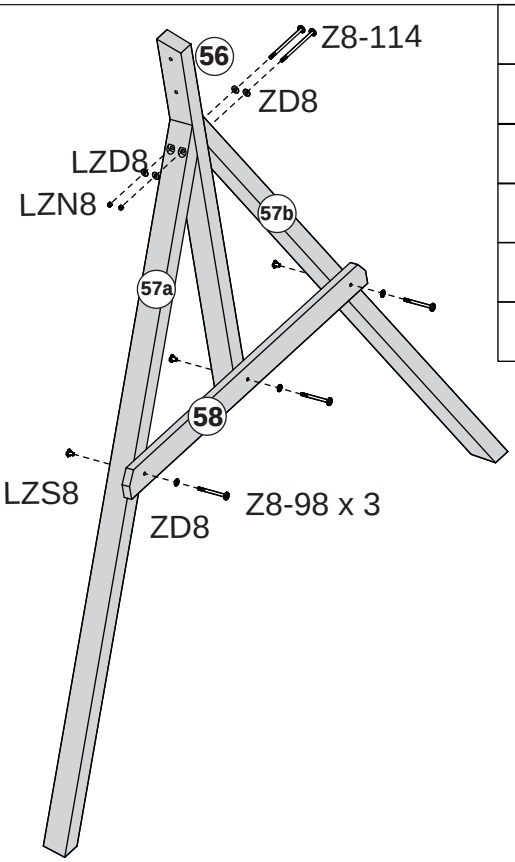

	ZD8 x 5	56 x 1
	LZD8 x 2	57a x 1
	LZN8 x 2	57b x 1
	LZS8 x 3	58 x 1
	Z8-98 x 3	
	Z8-114 x 2	

Step
Étape
Paso
43

60 x 1	
WJ0102 x 6	

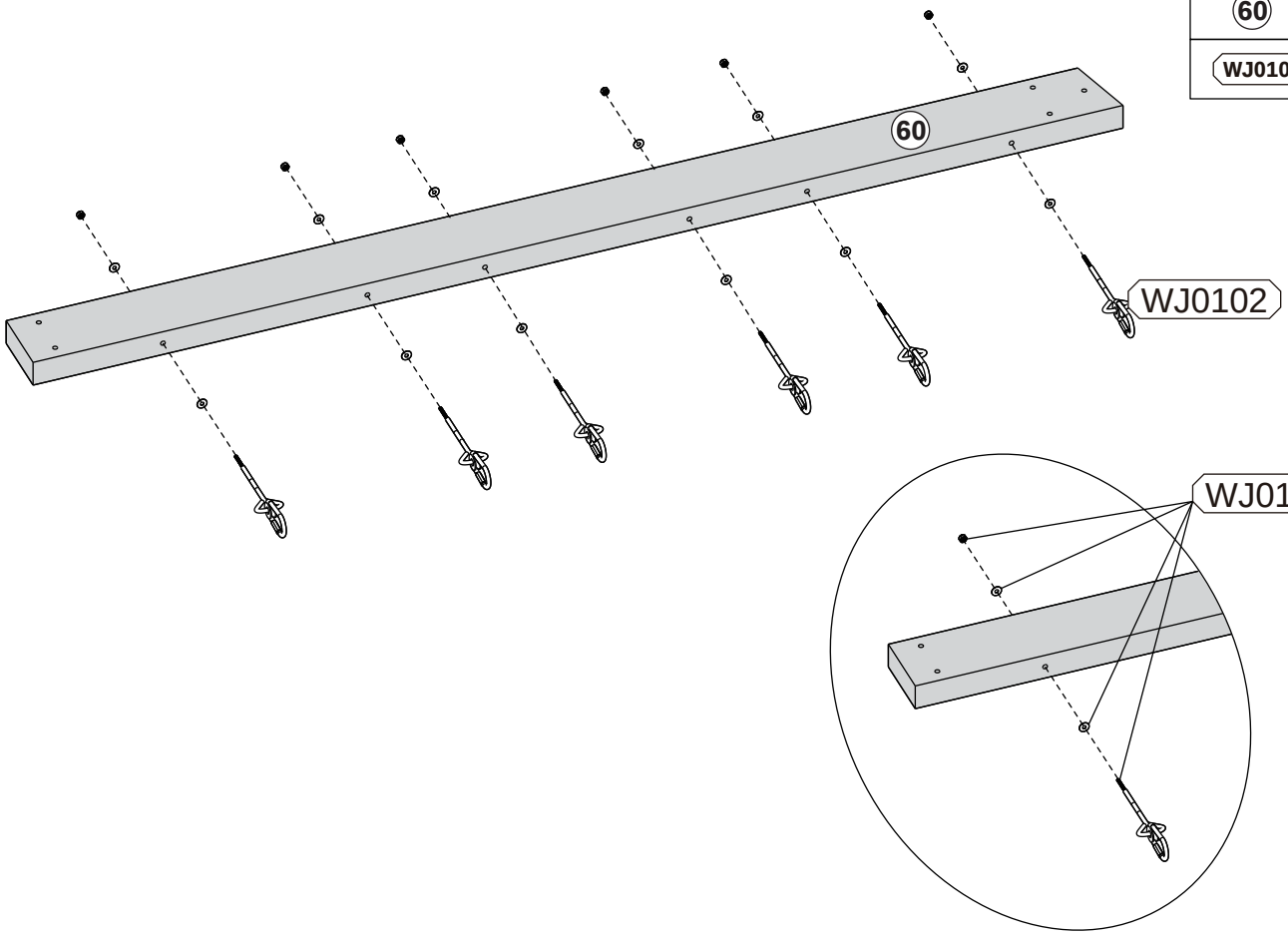

Step
Étape
Paso
44

	LZD8 x 10	WJ0104-L	x 1
	LZN8 x 5	WJ0105-R	x 1
	Z8-66 x 5		

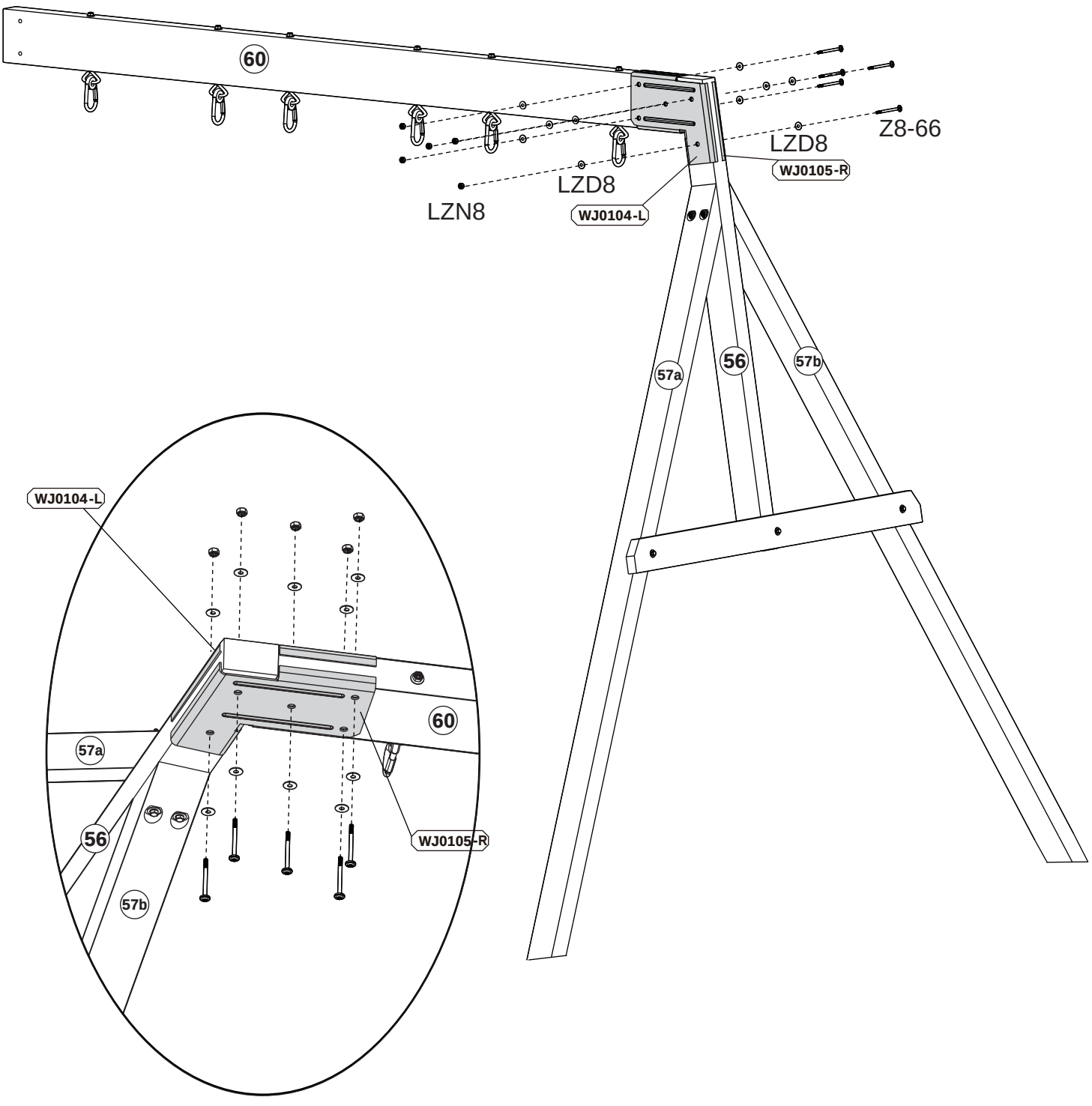

Step
Étape
Paso
45

	LZD8 x 4
	LZN8 x 2
	Z8-66 x 2

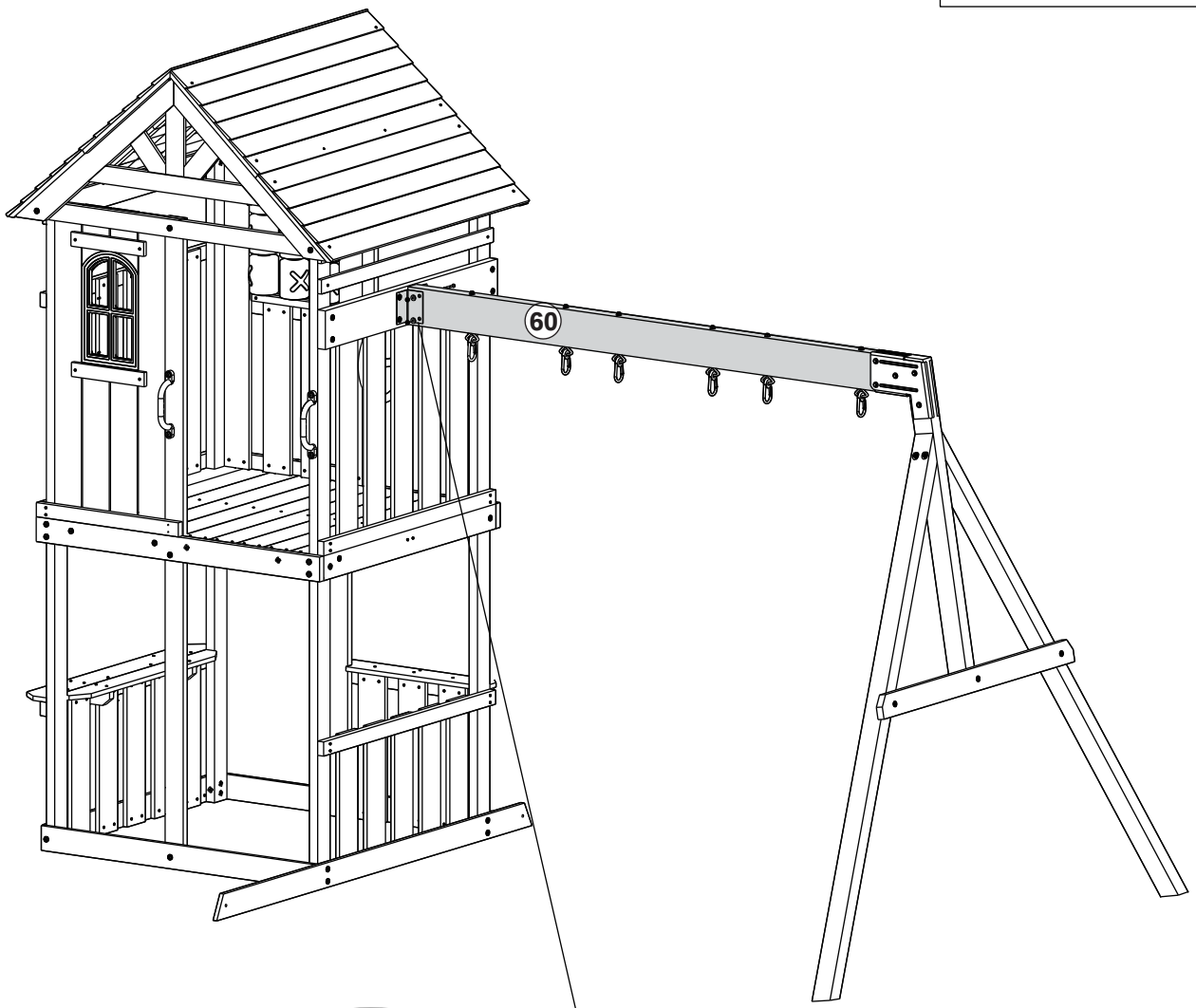

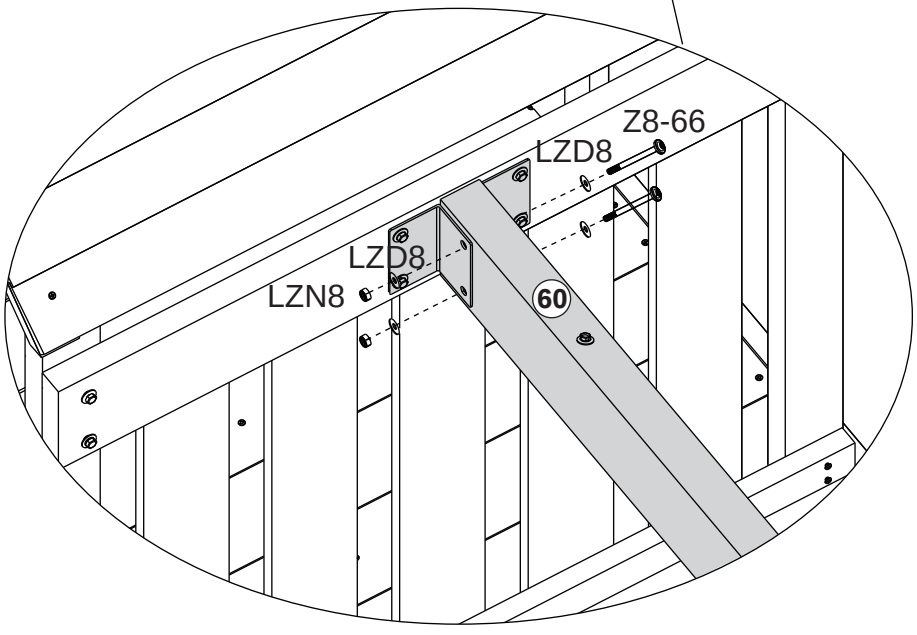

Step
Étape
Paso
46

P45 x 5	29 x 1
P62 x 4	32 x 2

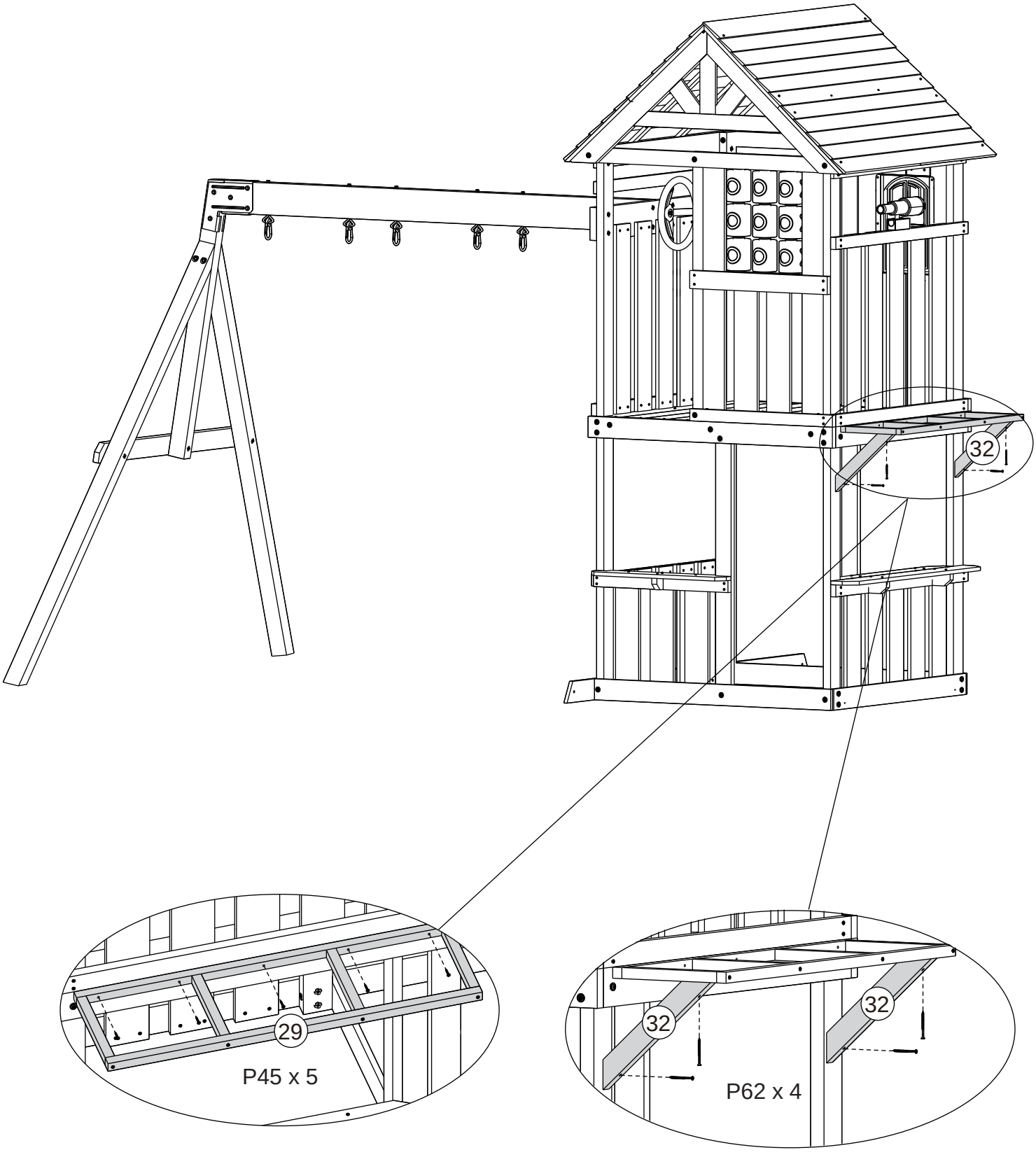

Step
Étape
Paso
47

TD13 x 10	73 x 1

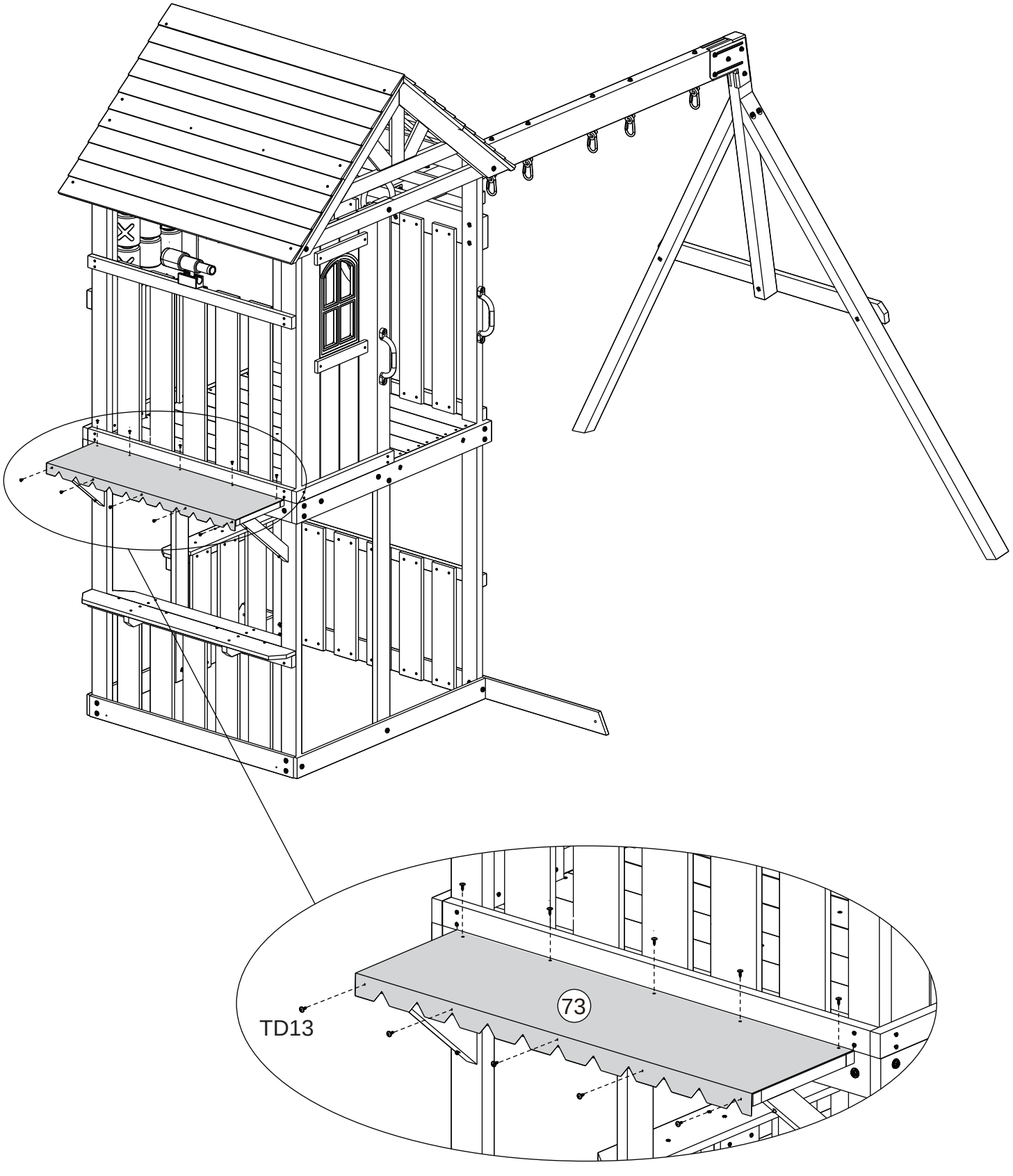

Step
Étape
Paso
48

ZJ6-62 x 6	70 x 6
P50 x 12	

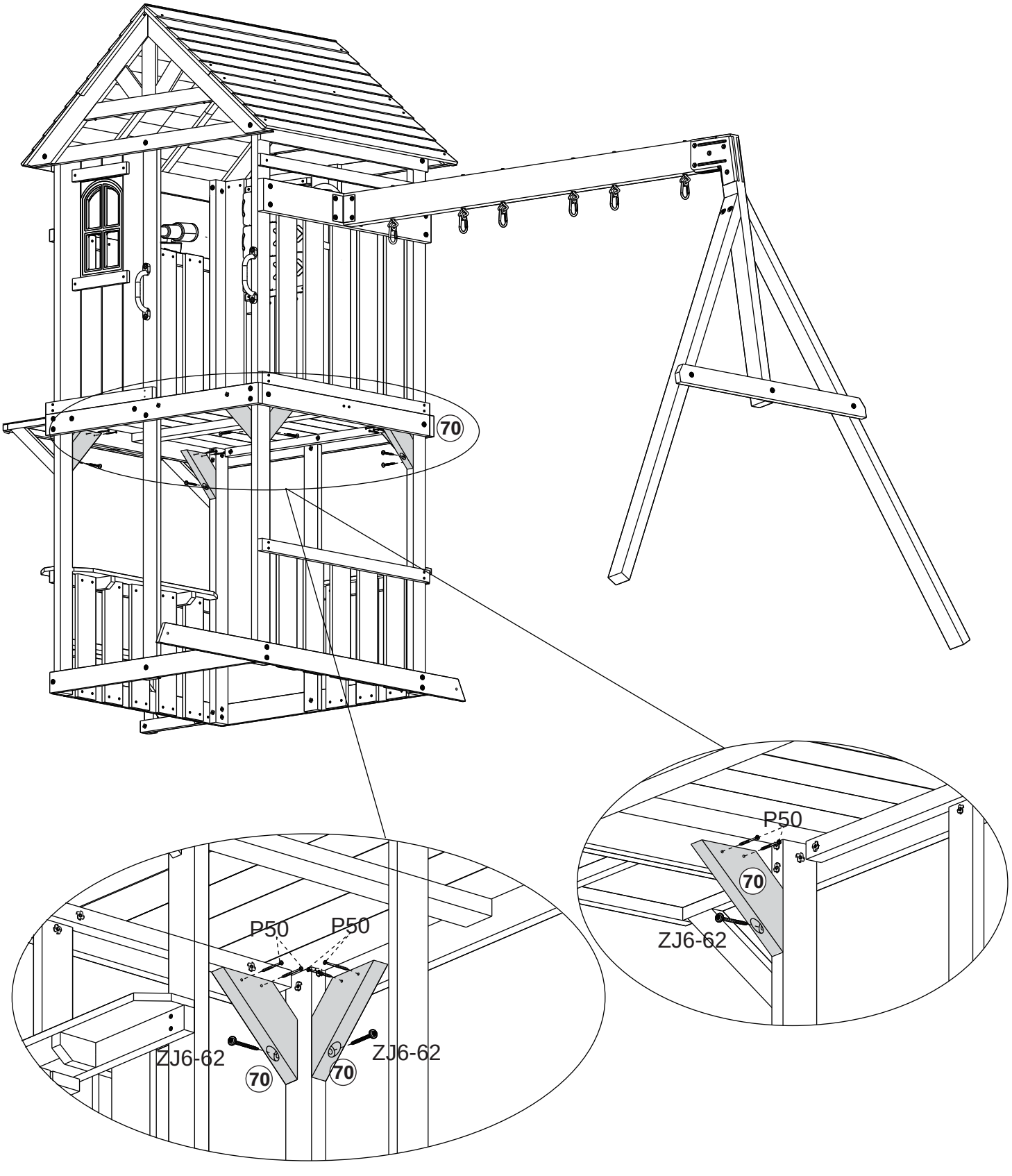

Step
Étape
Paso
49

	ZD6 x 3	1 x 1
	LZS6 x 3	2 x 1
	Z6-48 x 3	3 x 1
	P45 x 1	4 x 1

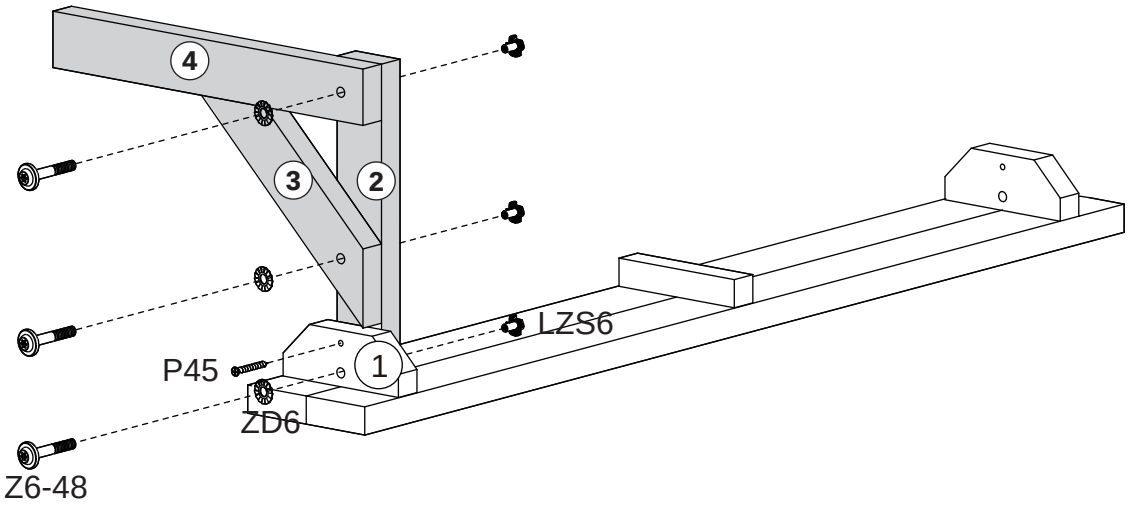

Step
Étape
Paso
50

	ZD6 x 3	2 x 1
	LZS6 x 3	3 x 1
	Z6-48 x 3	4 x 1
	P45 x 1	

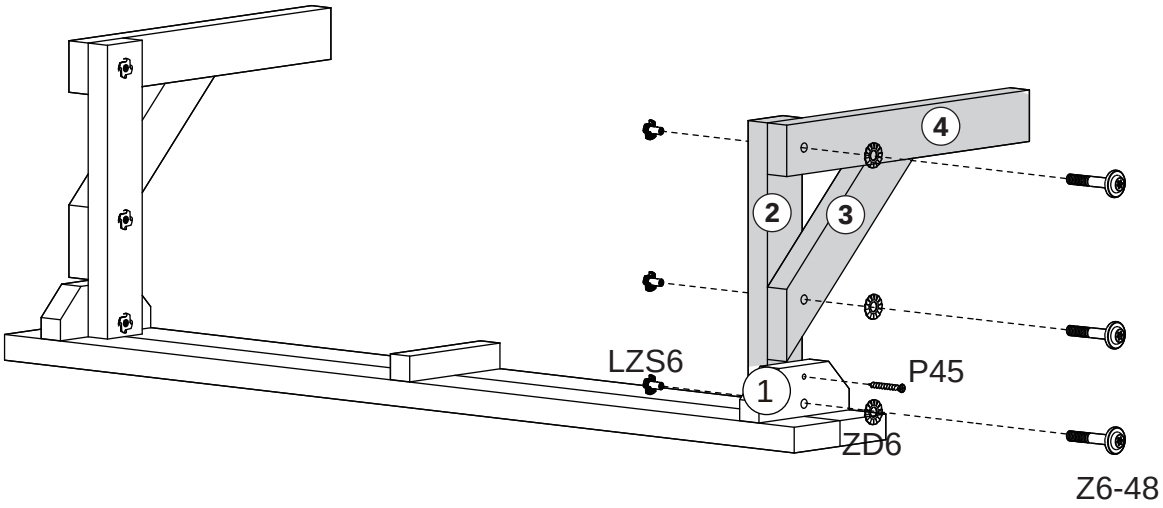

Step
Étape
Paso
51

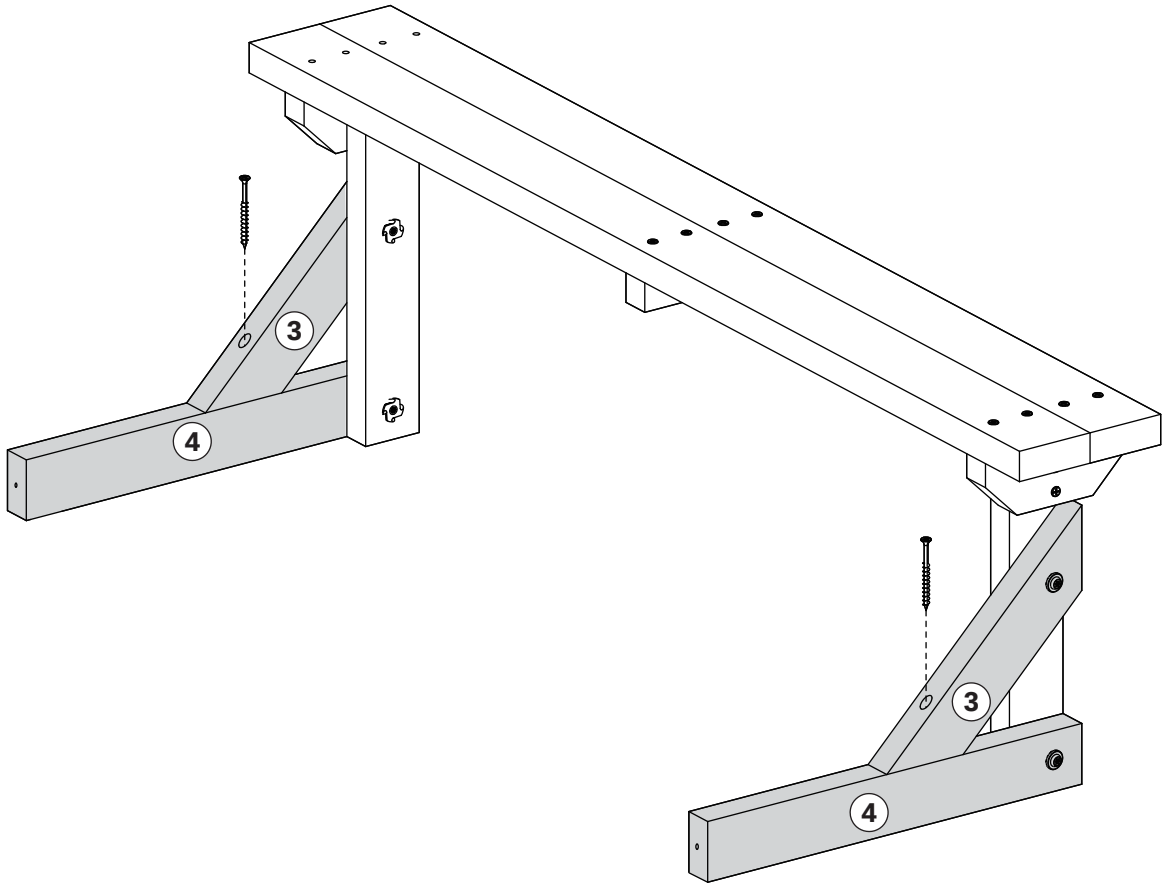

P62 x 2

Step
Étape
Paso
52

TX16 x 12	WJ0208 x 2
P45 x 2	

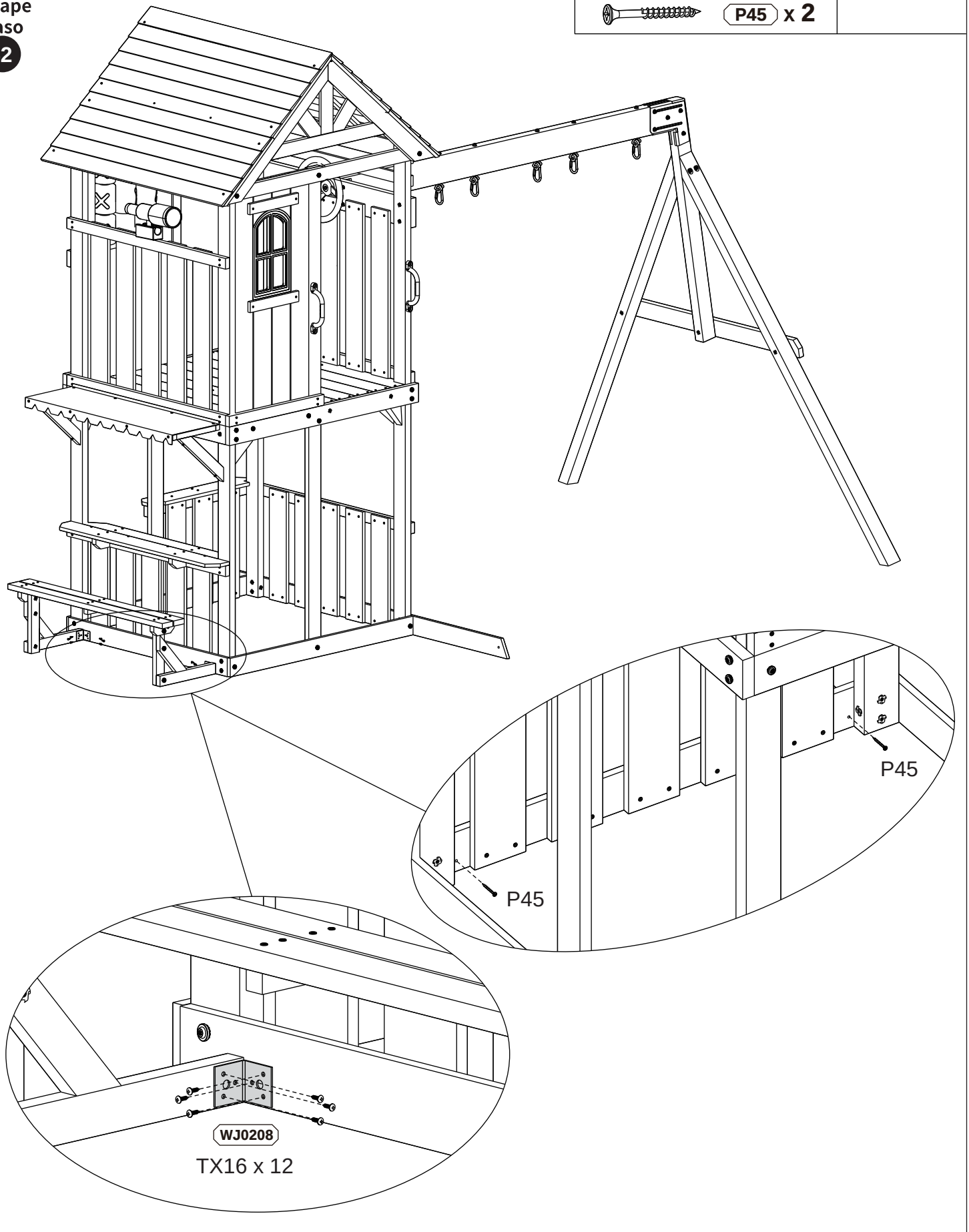

Step
Étape
Paso
53

	LZS6 x 3	61 x 3
	TC25 x 3	SJ0909 x 3
	ZX6-25 x 3	

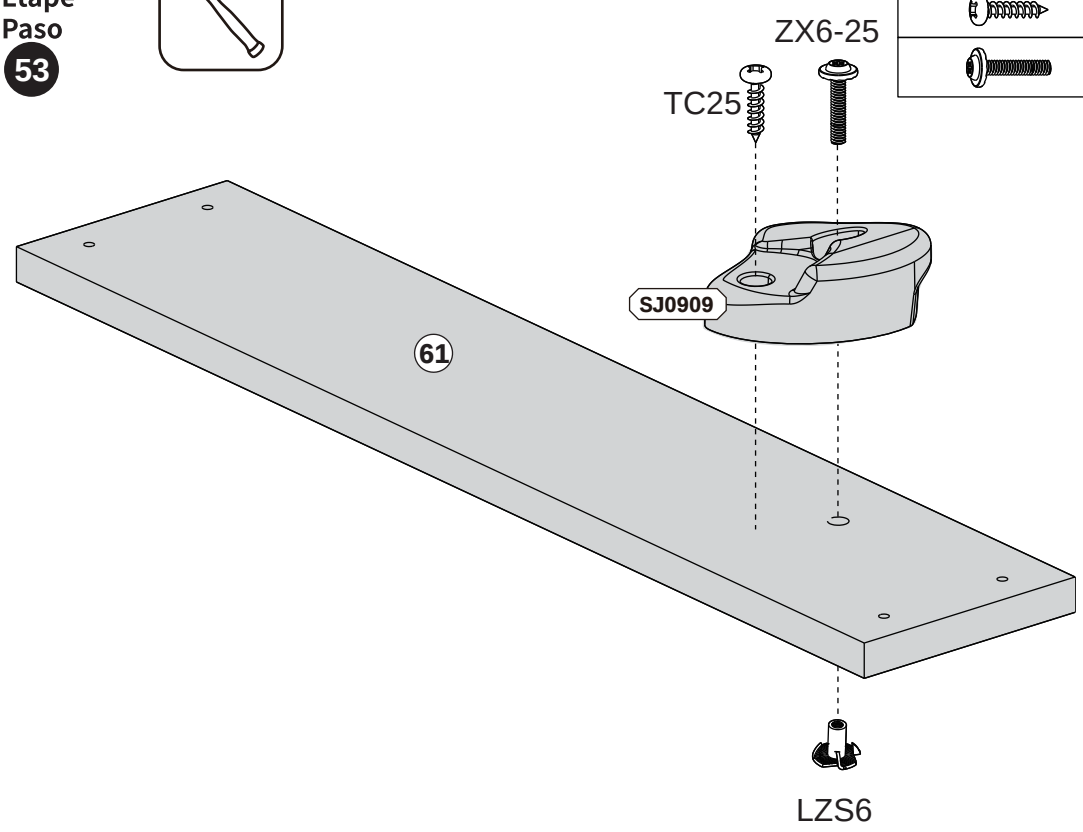

Complete this step three times

Step
Étape
Paso
54

	LZS6 x 4	61 x 4
	TC25 x 4	SJ0910 x 4
	ZX6-25 x 4	

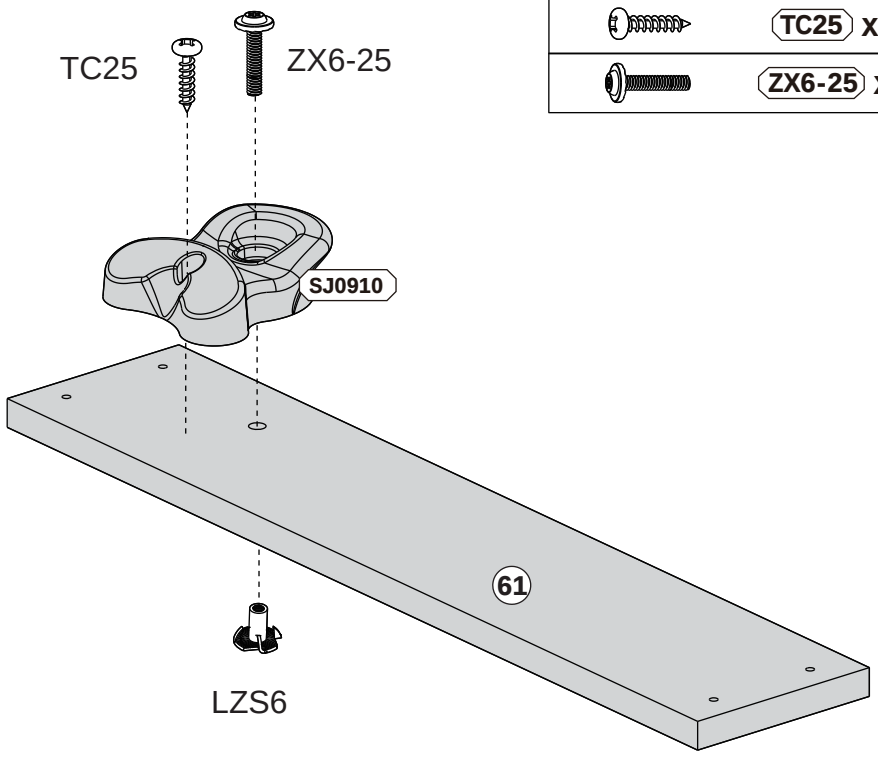

Complete this step four times

Step
Étape
Paso
55

	LZS6 x 1	62 x 1
	TC25 x 1	SJ0909 x 1
	ZX6-25 x 1	

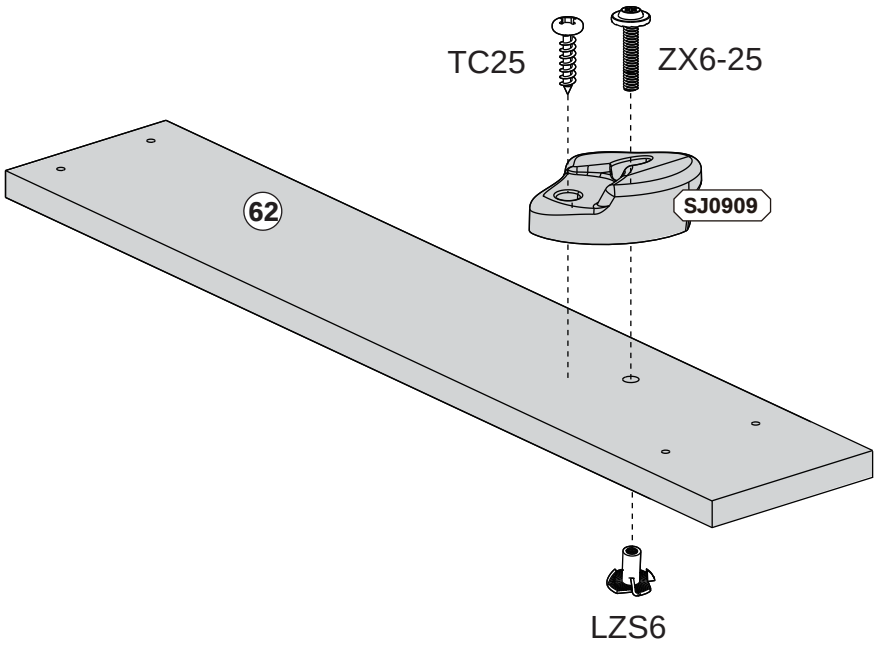

Step
Étape
Paso
56

	P35 x 28	64 x 1
		65 x 1

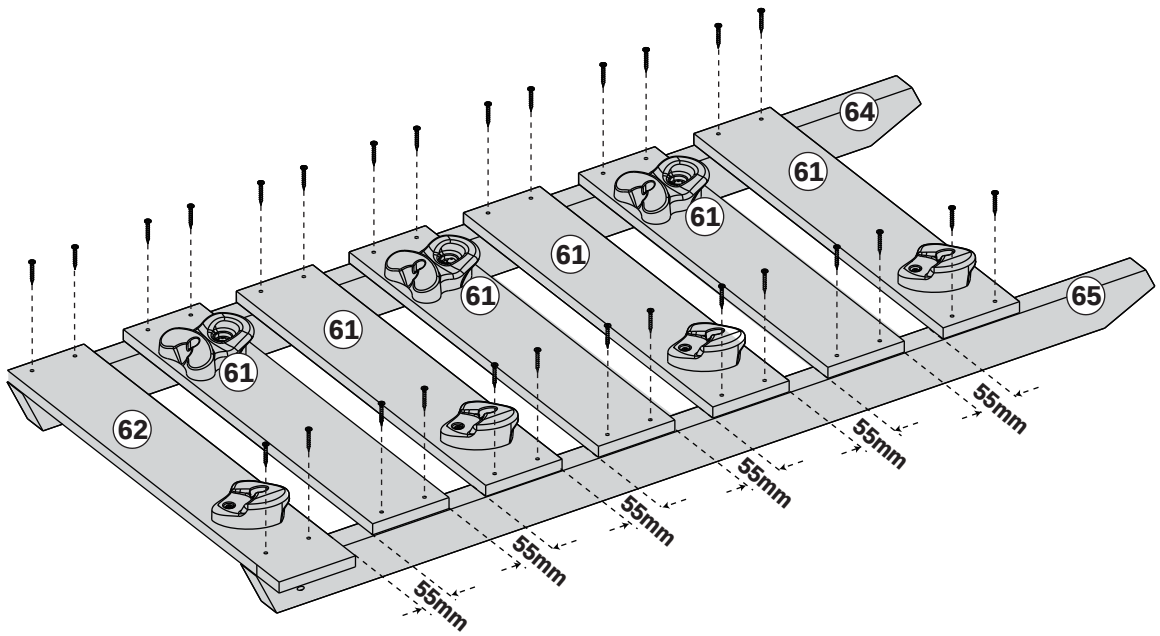

P35 x 4	63 x 1

Step
Étape
Paso
57

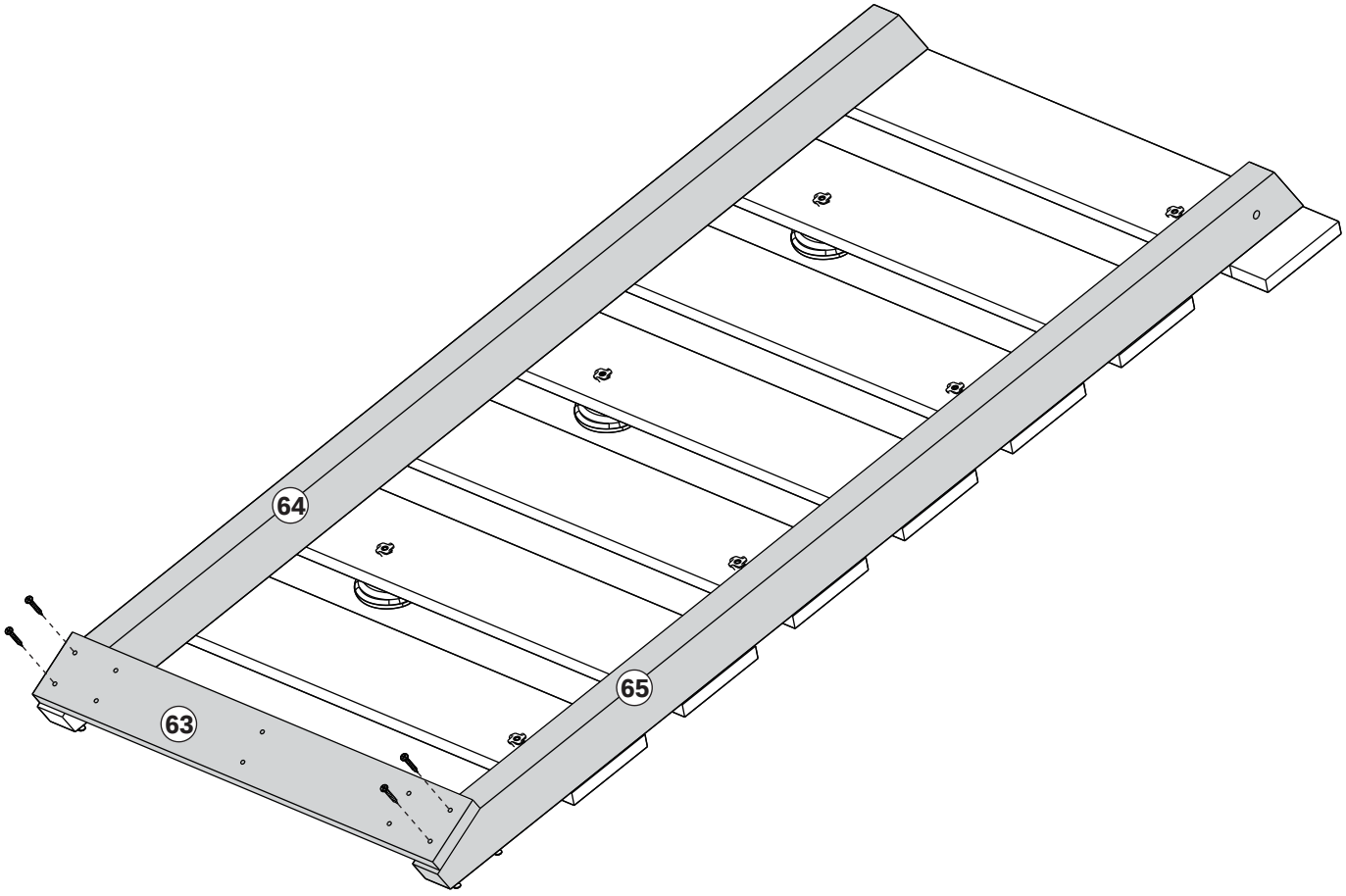

Step
Étape
Paso
58

	ZD8 x 1	67 x 1
	LZS8 x 1	
	P35 x 6	
	Z8-86 x 1	

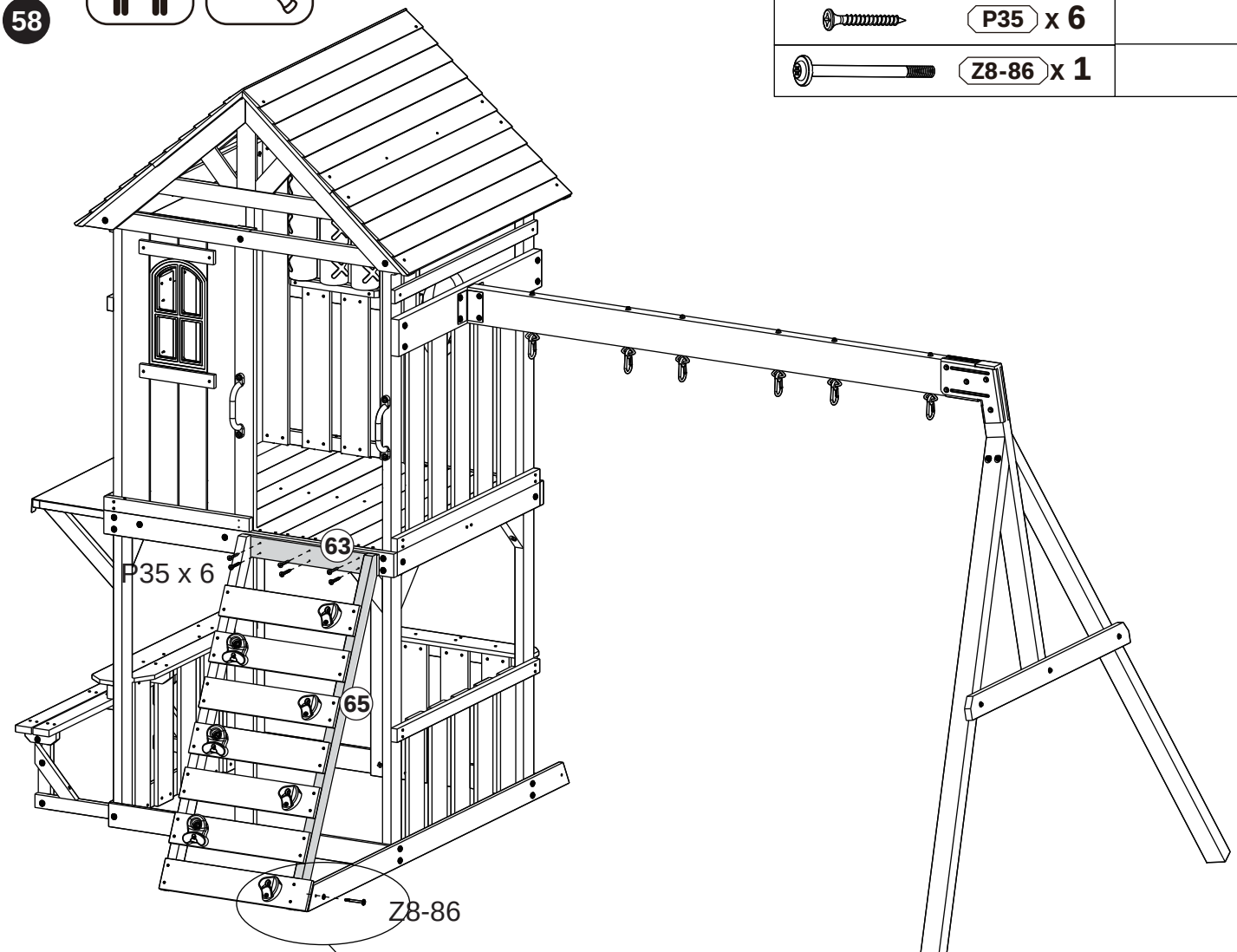

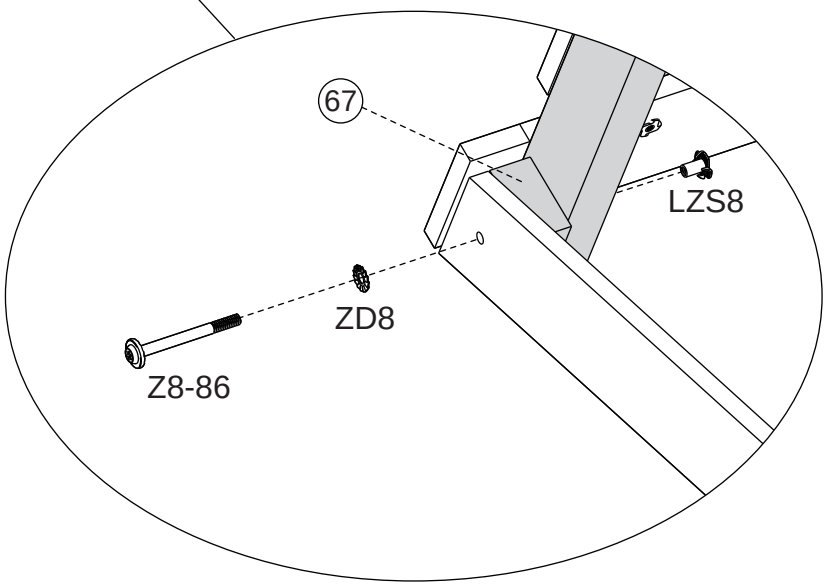

Step
Étape
Paso
59

P35 x 4	61 x 1

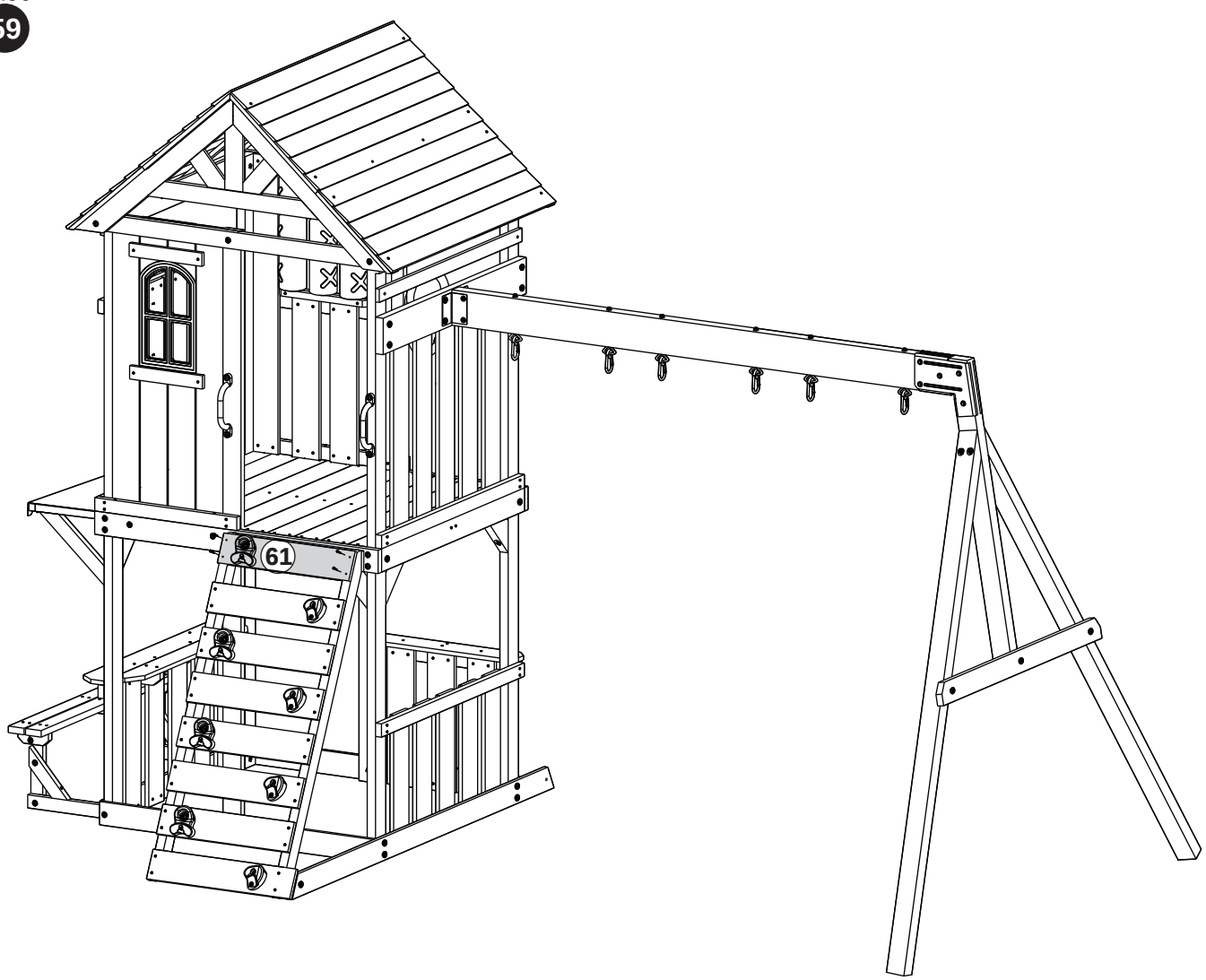

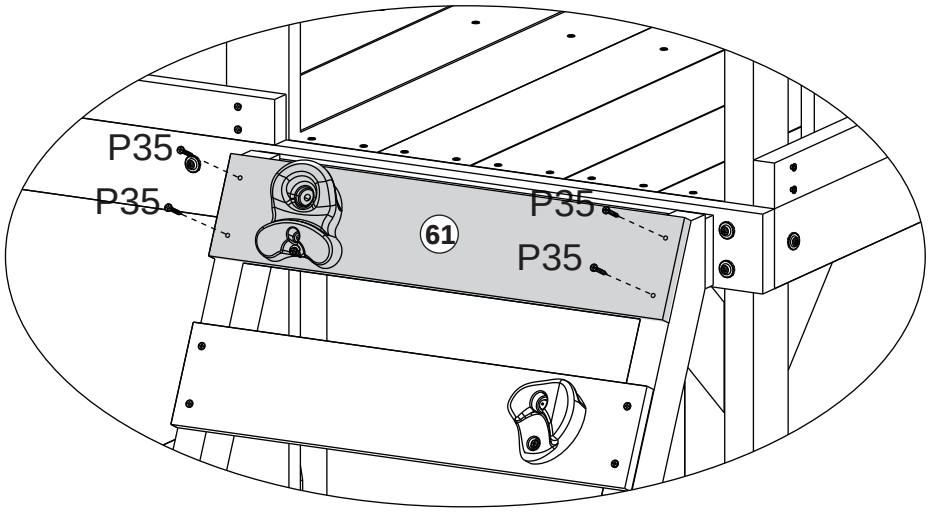

Step
Étape
Paso
60

	ZD6 x 1	66 x 1
	LZS6 x 1	
	Z6-48 x 1	
	ZJ6-62 x 1	

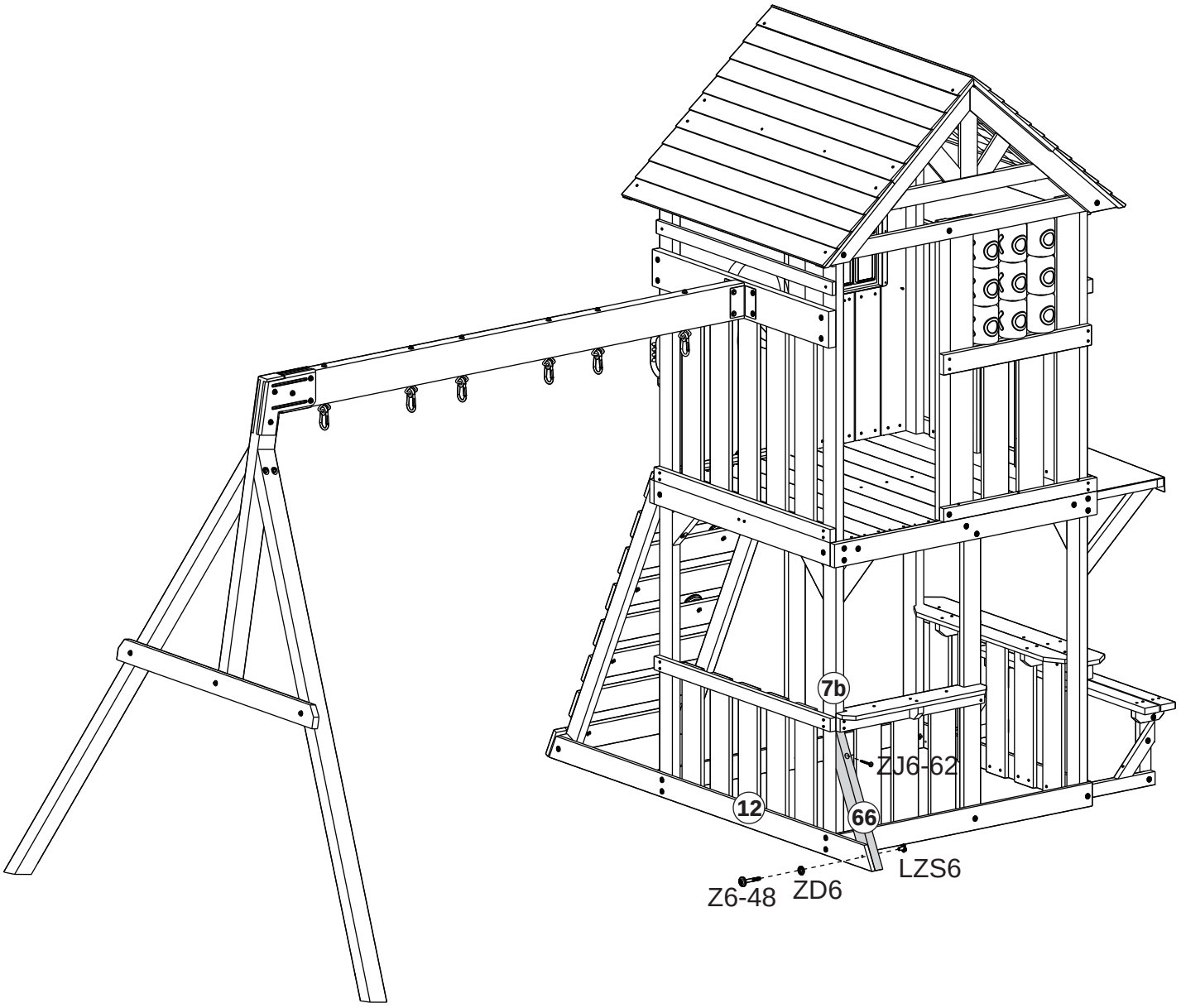

Step
Étape
Paso
61

TX16 x 8

SJ0101 x 1

WJ0209-b x 1

68 x 1

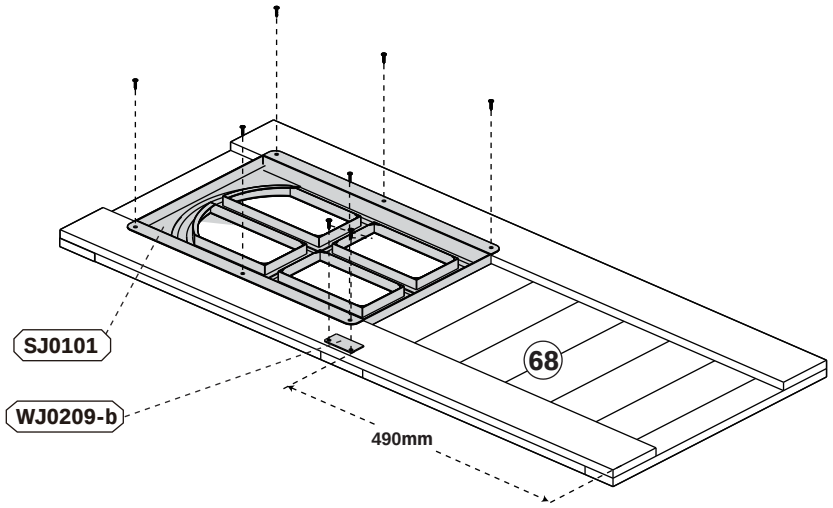

Step
Étape
Paso
62

TX16 x 2

WJ0201 x 1

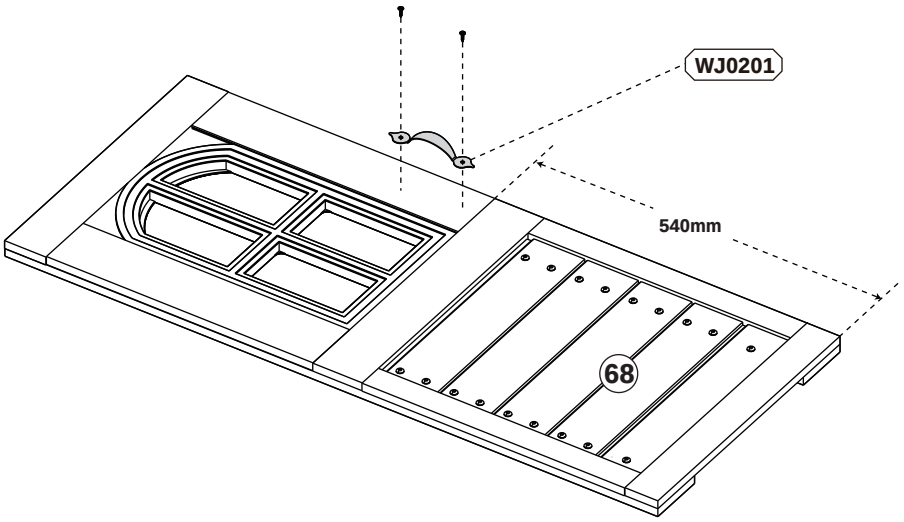

Step
Étape
Paso
63

TX16 x 6

WJ0202 x 2

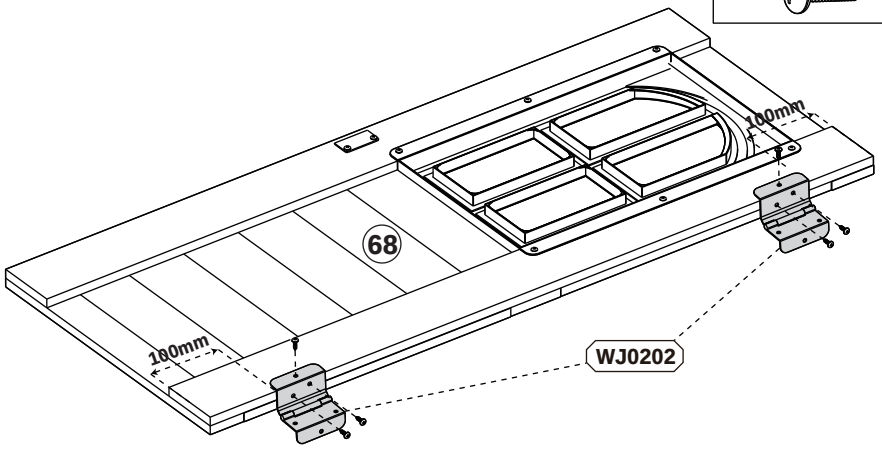

Step
Étape
Paso
64

TX16 x 6

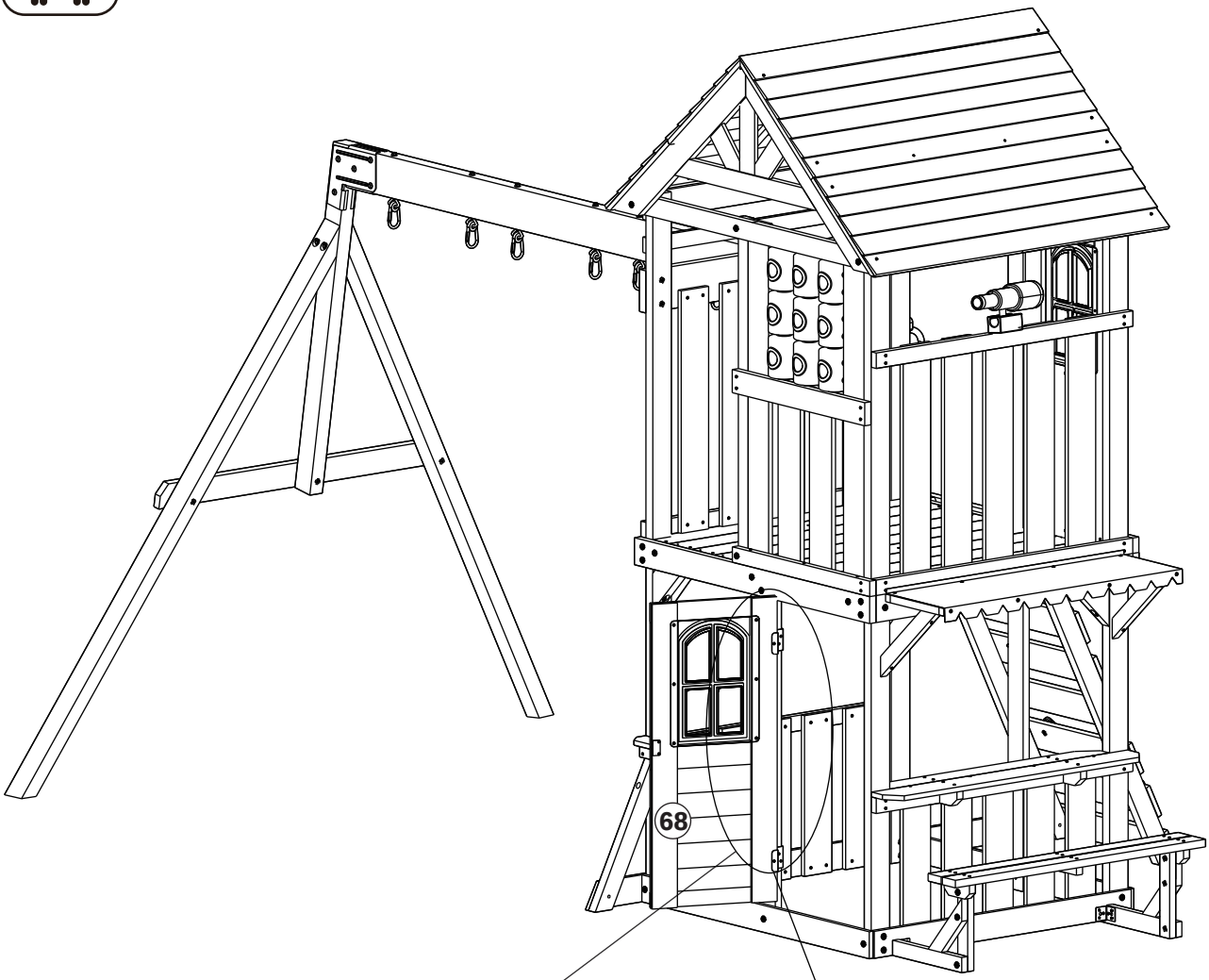

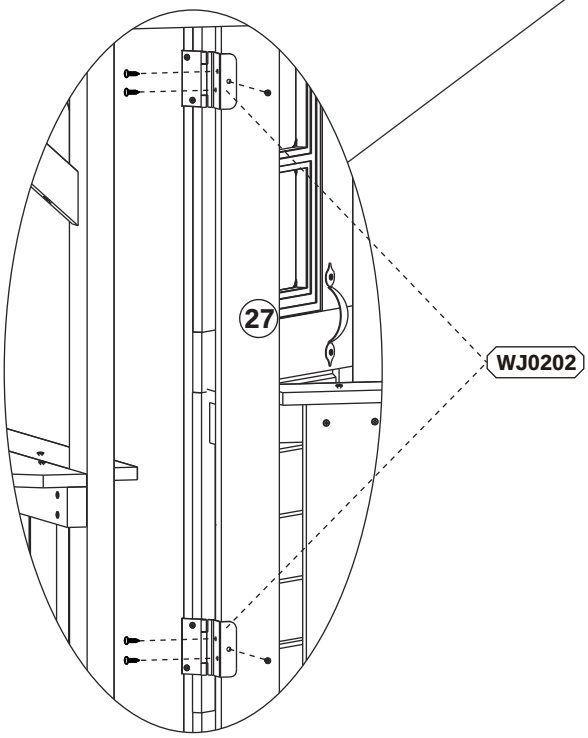

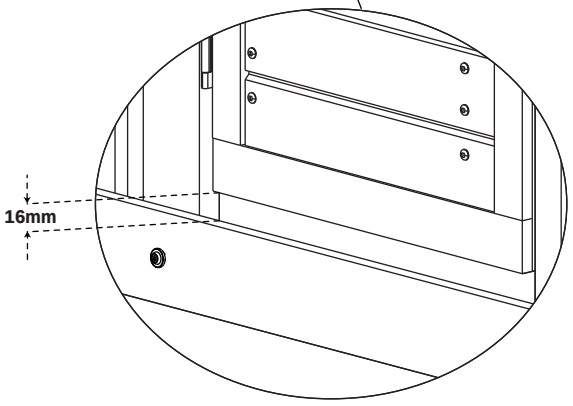

Step
Étape
Paso
65

TX22 x 2	72 x 1
P45 x 2	WJ0209-a x 1

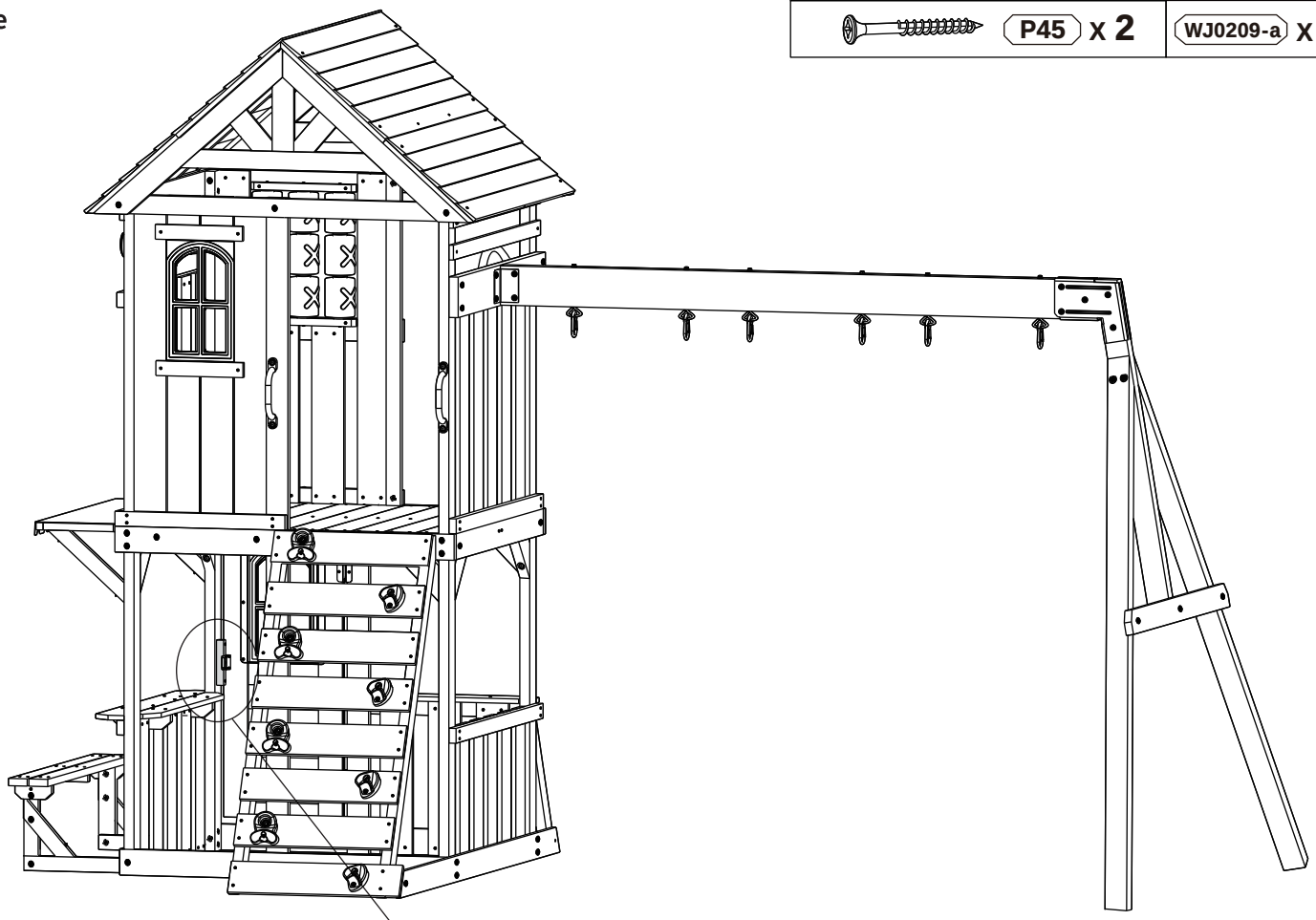

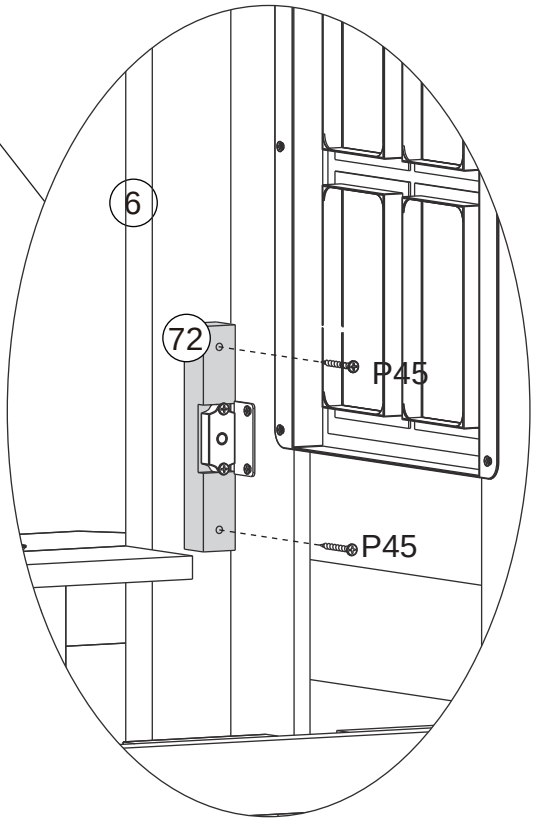

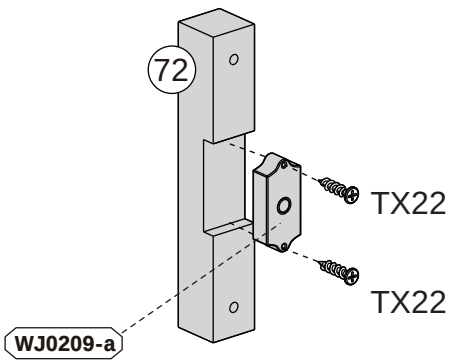

Step
Étape
Paso
66

TX16 x 4 | SJ1101 x 1

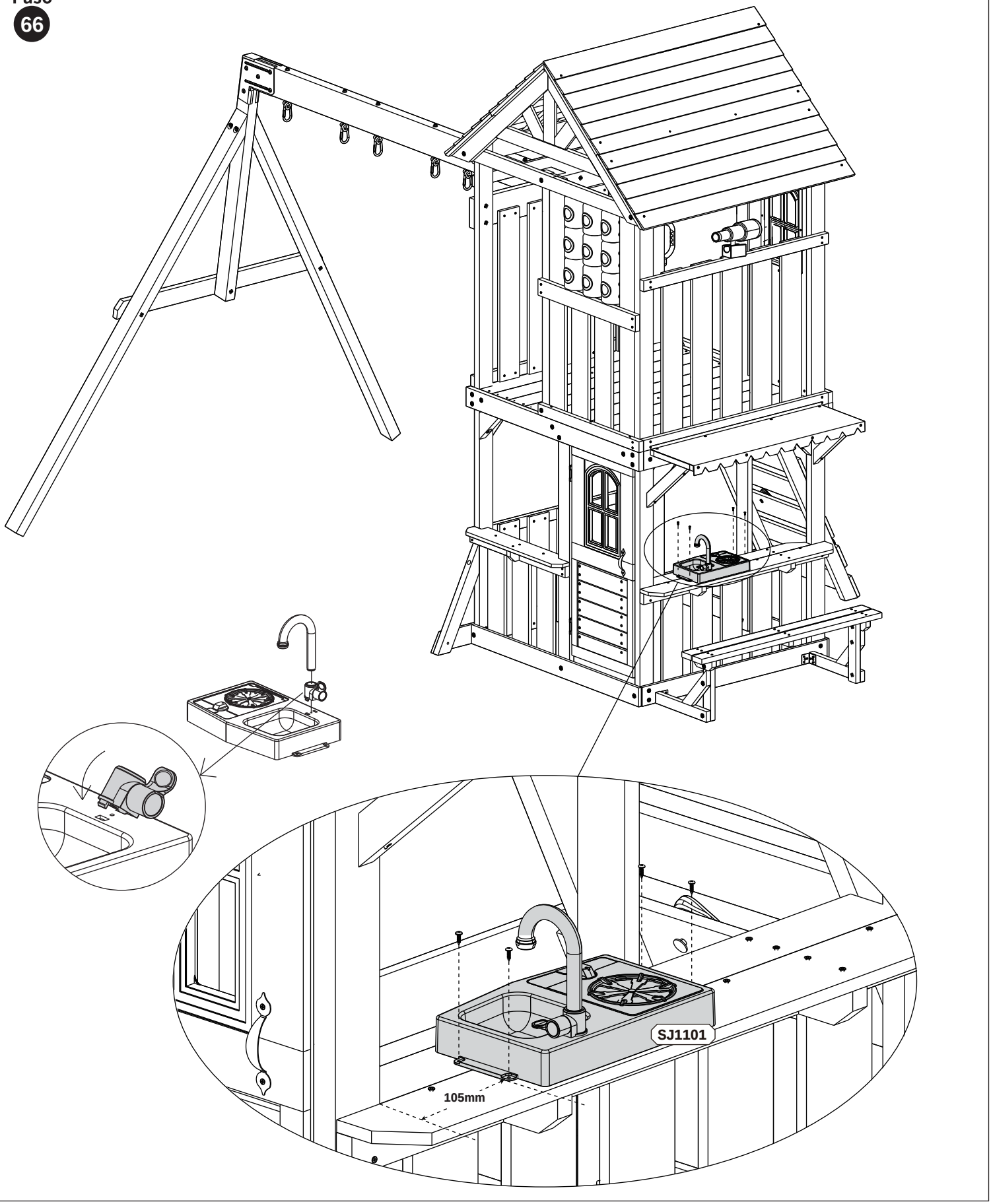

Step
Étape
Paso
67

TX16 x 4 | SJ0908 x 1

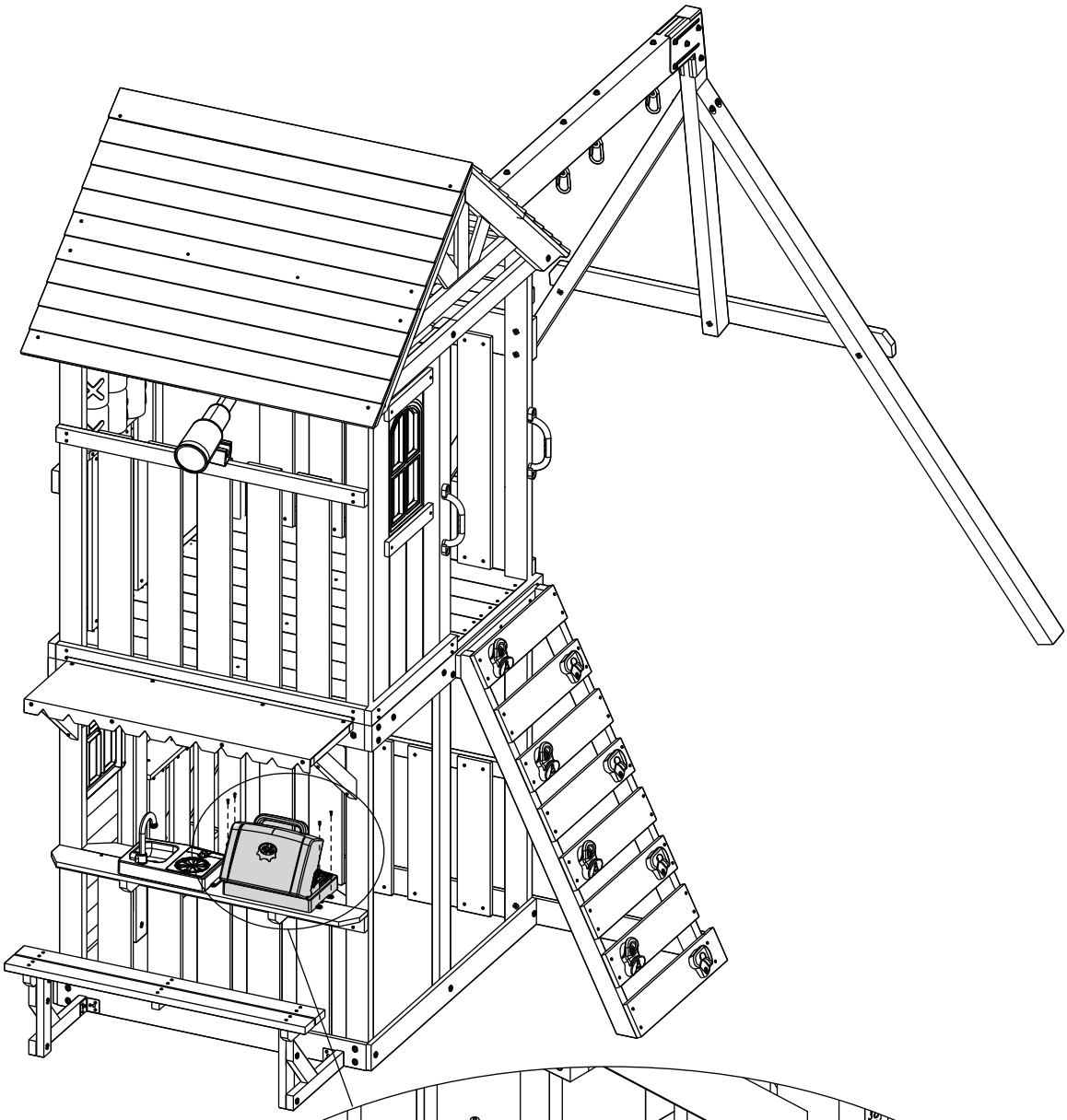

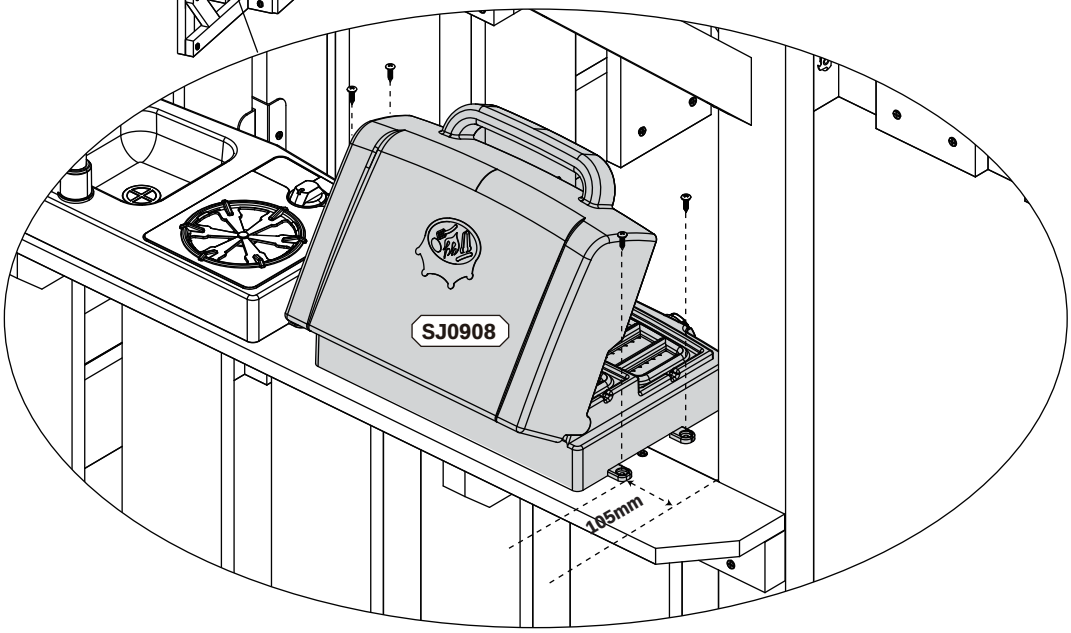

Step
Étape
Paso
68

TX16 x 2	SJ1913 x 1
	SJ1612 x 1
	SJ1605 x 1
	SJ1609 x 1

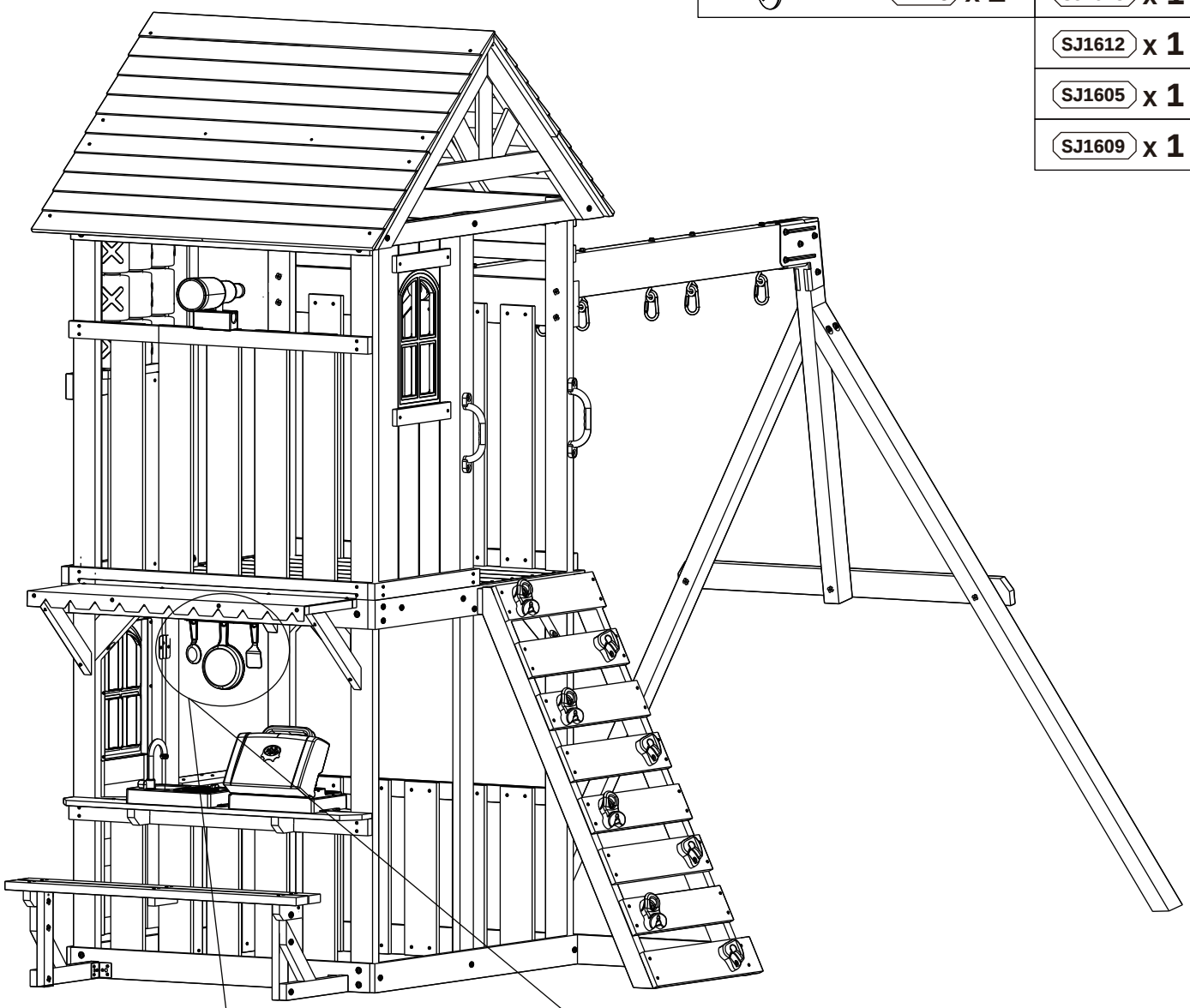

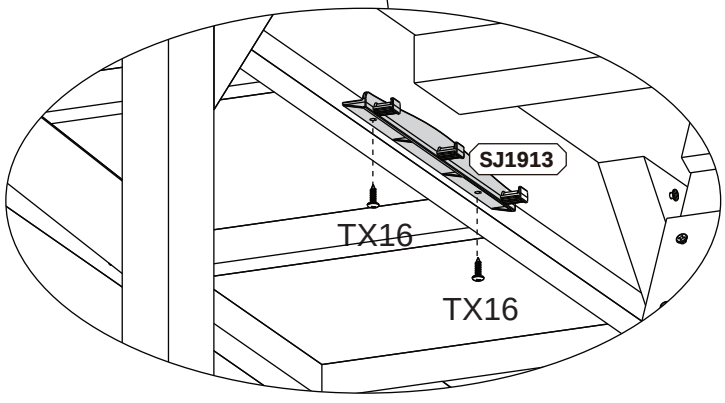

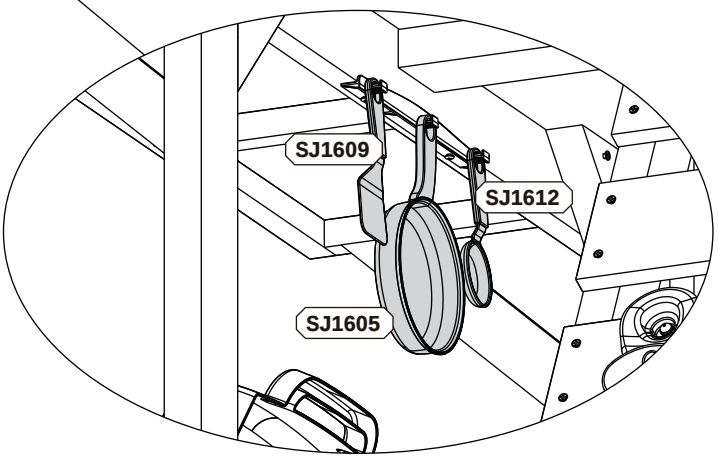

Step
Étape
Paso
69

TC50 x 3 | SJ0923 x 1

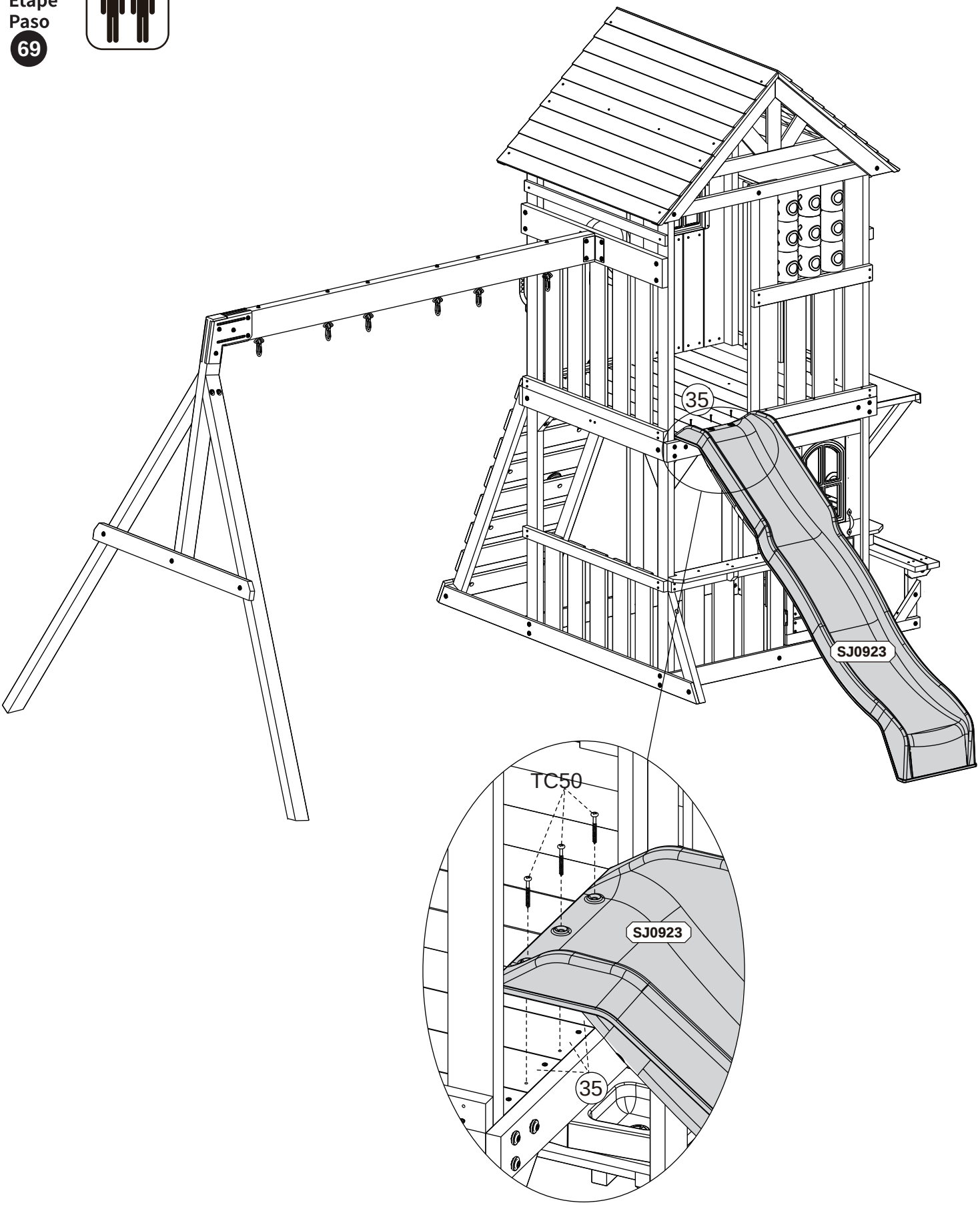

Step
Étape
Paso
70

SJ0915	x 2
SJ0916	x 1

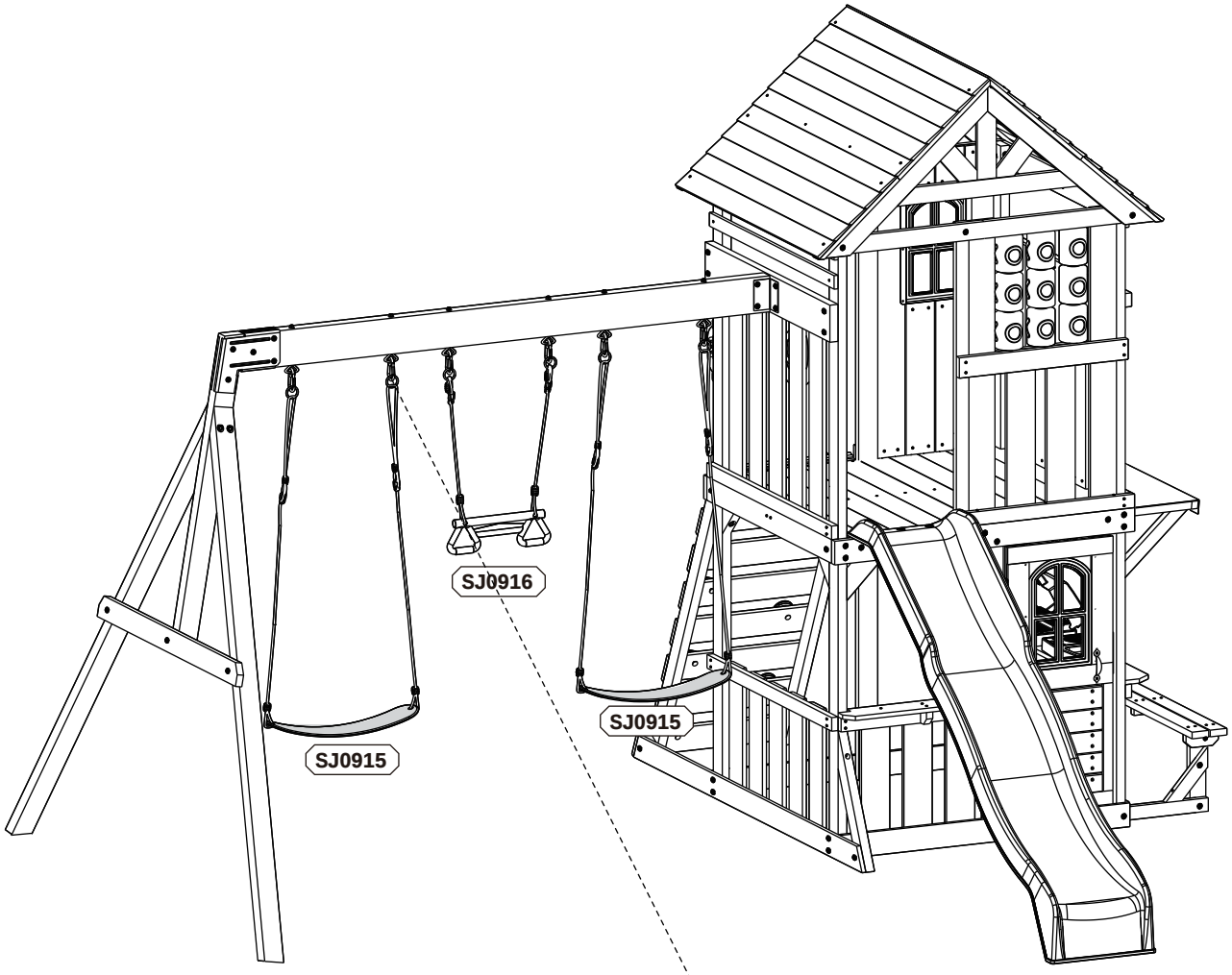

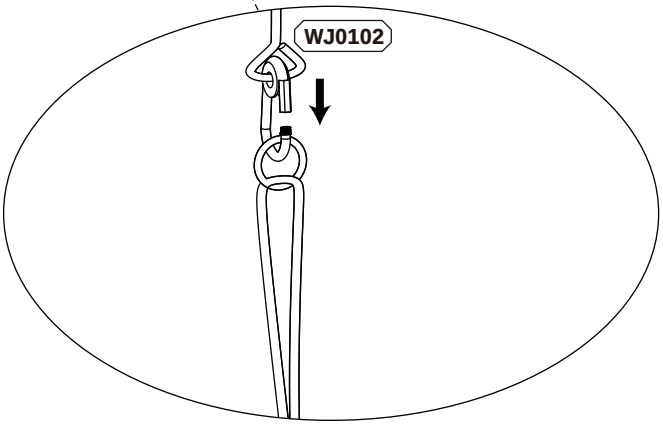

TC50 x 6 | WJ0112 x 6

Step
Étape
Paso
71

