Filing Cabinets
User Manual

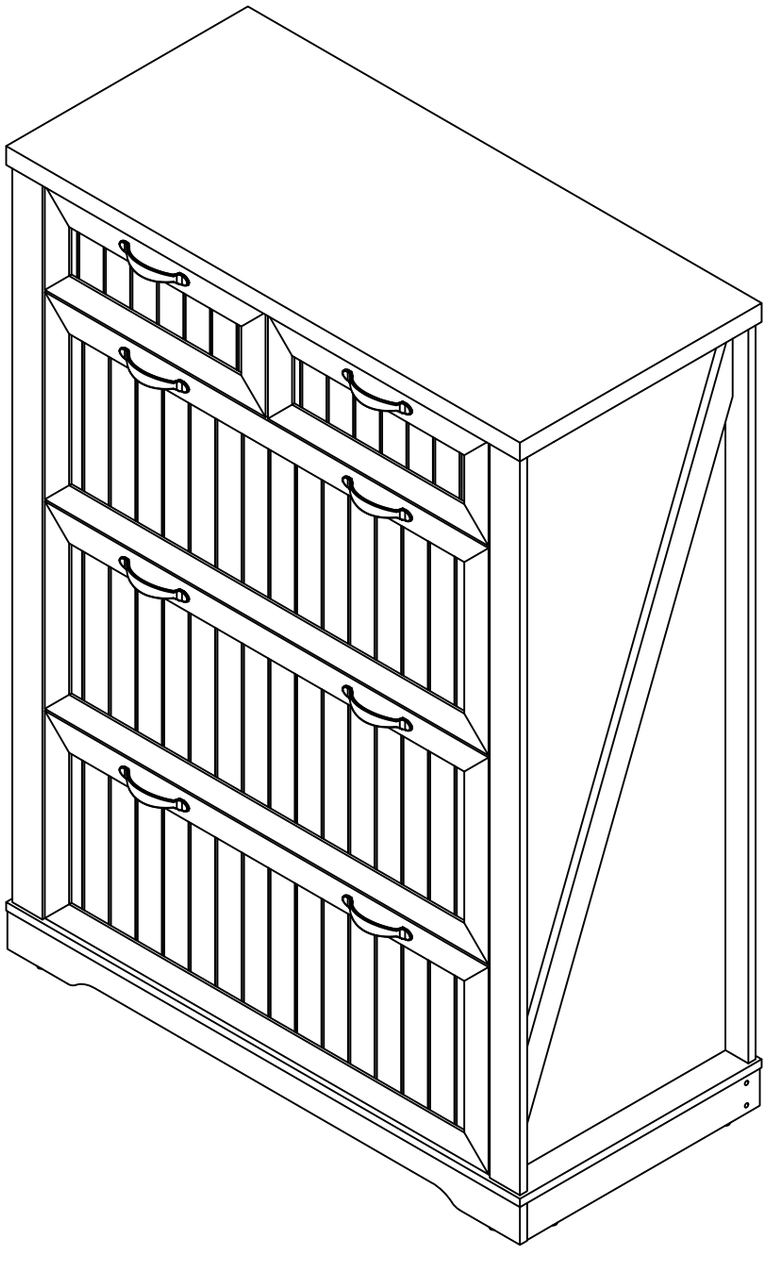

AJ-DJ505710

⚠ Please read this instruction manual carefully before using the product

Package Contents

Plates and iron components	Assembly tool kit	Instruction manual

⚠ Package Contents

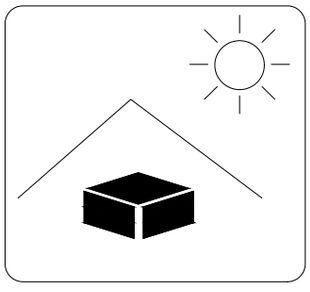

1.Avoid long-term direct sunlight exposure

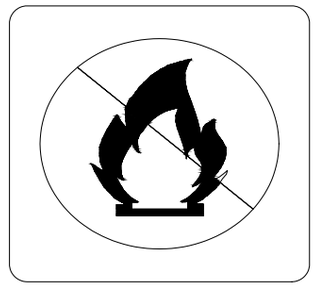

2.Stay away from fire

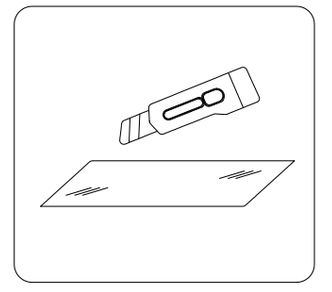

3.keep away from sharp objects

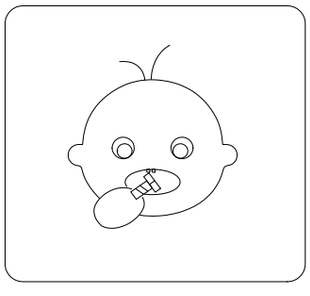

4.Keep infants/children away from assembly parts to avoid choking and suffocation.

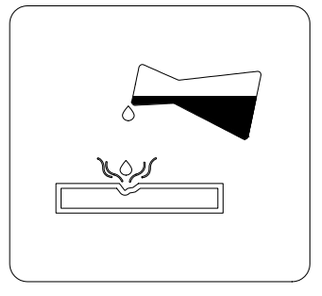

5.keep away from corrosive substances

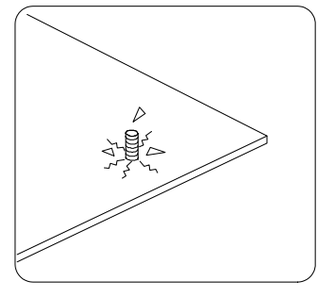

6.Pay attention to avoid cver-tightening fasteners, orthey may induce cra-cking within the board.

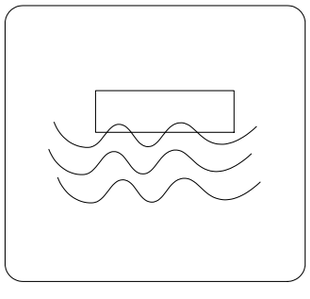

7.Prevent objects from being damaged by immersion in water

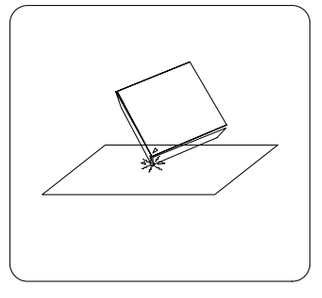

8.Prevent object collision and damage



9.Be careful to avoid collisions

Installation of Cams and Pins

Screw the pin into the hole. To set the cams correctly, ensure that the arrow on the cam is opening o the hole of the pin it is locking. Lock the cam by tturning the cam head with a screwdriver until it is tightened. Please do not use an electric screwdriver to assemble the unit.

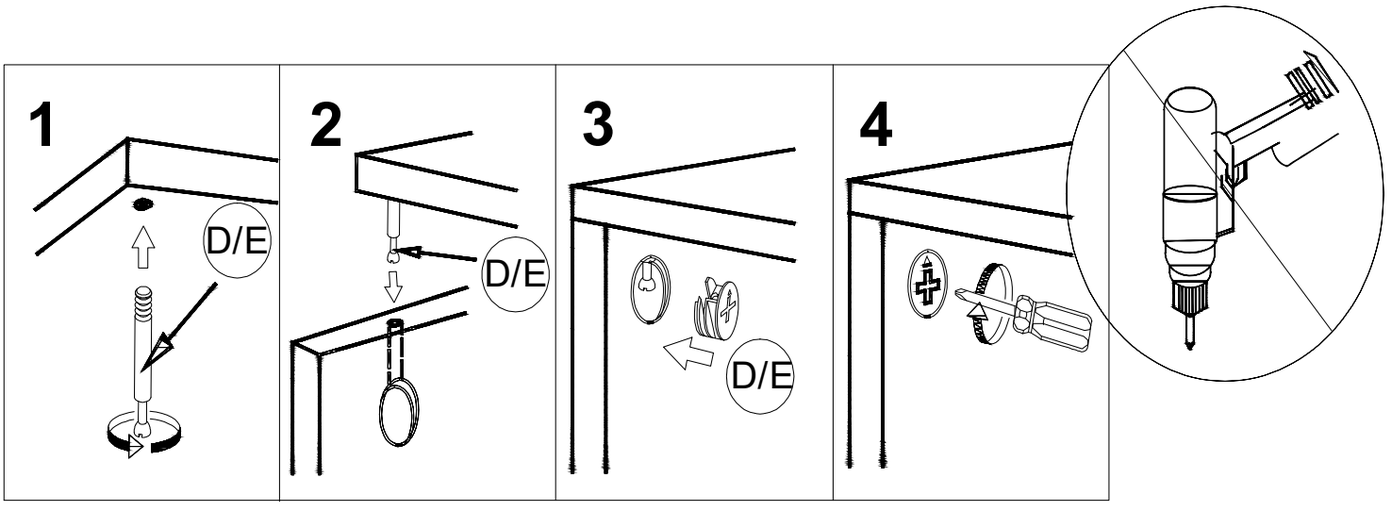

Installation of Cams and Pins

1.Matters needing attention

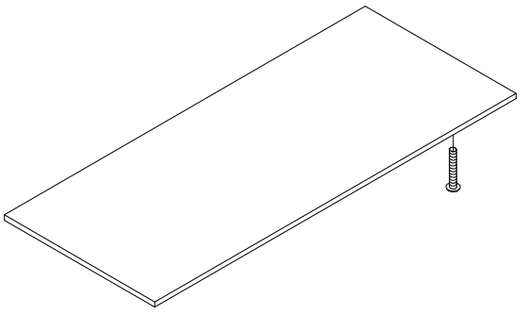

Be sure to use the proper screws to avoid damaging the parts

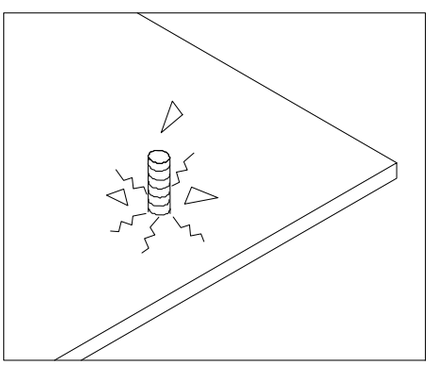

Wrong screws can cause the plank to crack

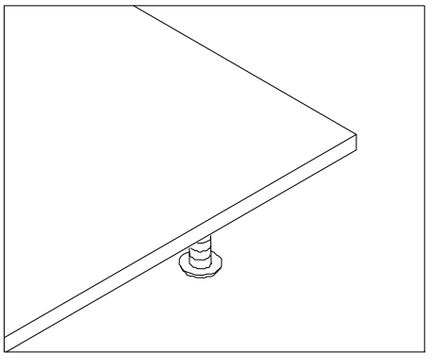

The right screw is the right size

Matters needing attention

(1) When installing the screws in the installation step, the screws do not need to be tightened. After this installation step is confirmed and the holes are aligned, then tighten all the screws.

(2) If the screws are tightened during the installation process, it will cause problems such as misalignment of the screw holes and misalignment of the board in subsequent installations.

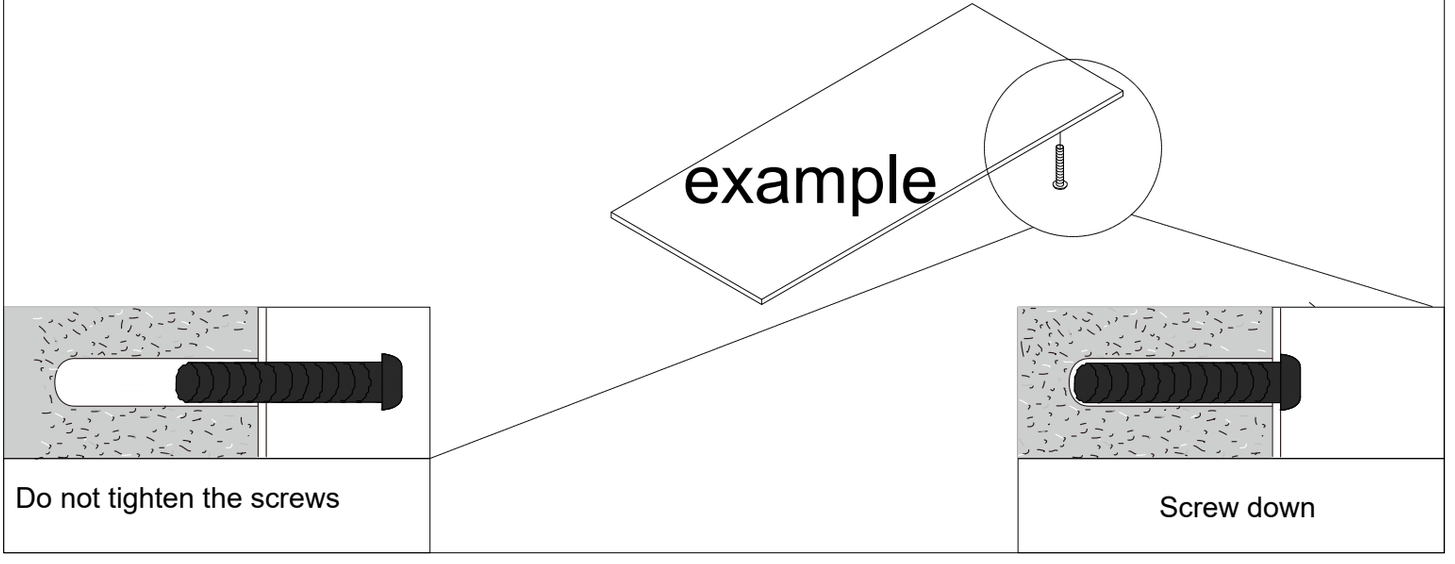

Disassembly Diagram

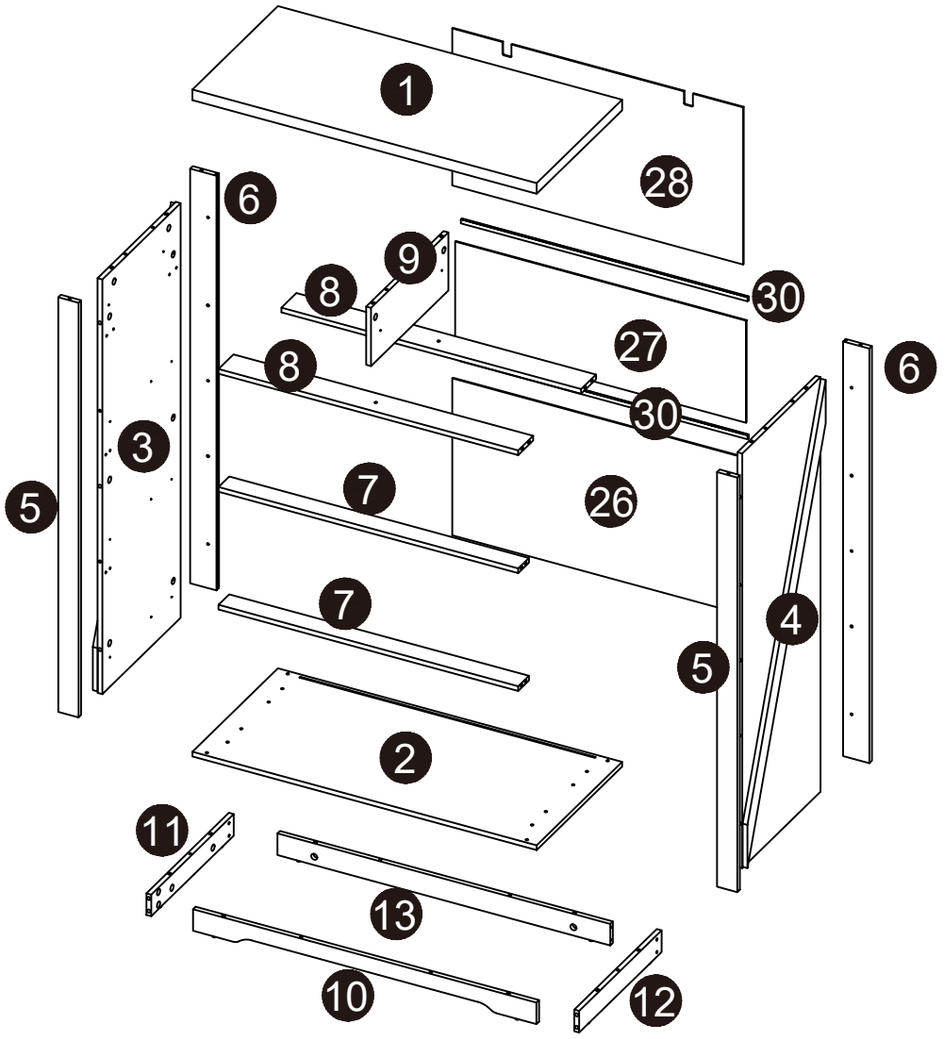

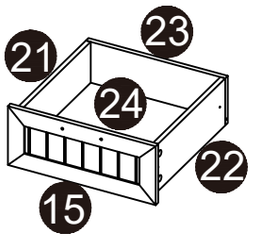

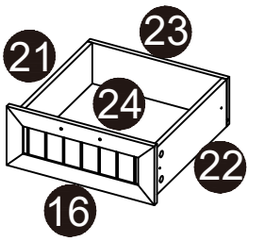

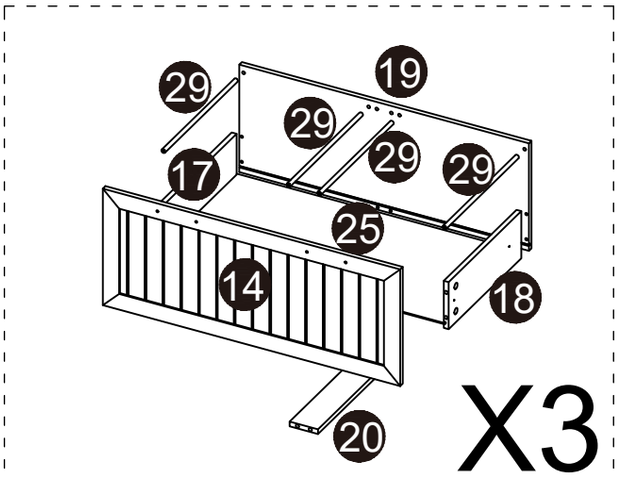

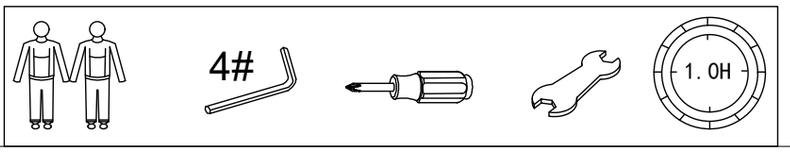

Parts List

1 x1 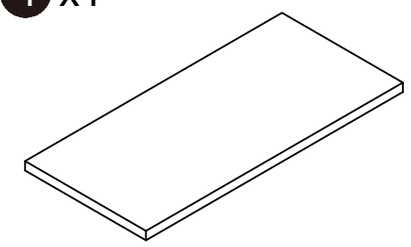	2 x1 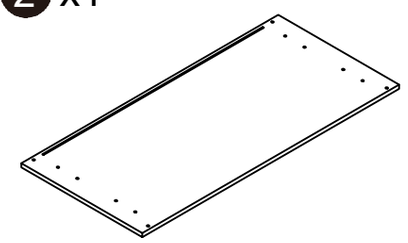	3 x1 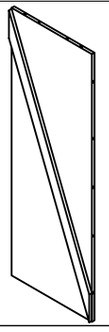
4 x1 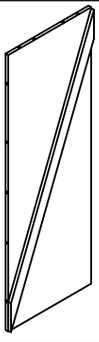	5 x2 	6 x2 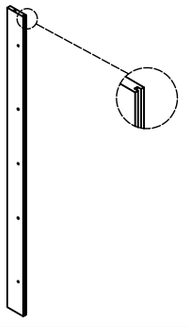
7 x2 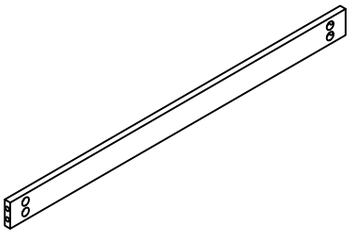	8 x2 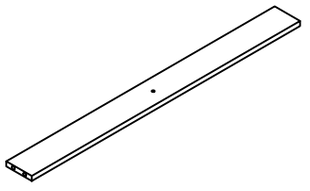	9 x1 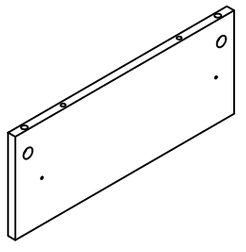
10 x1 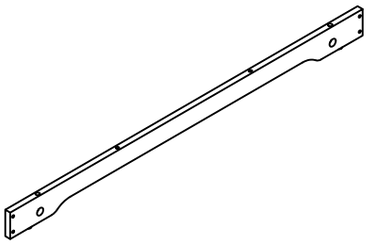	11 x1 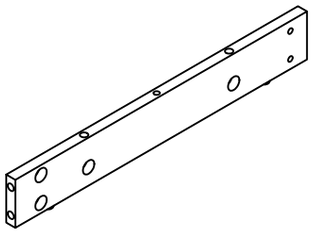	12 x1 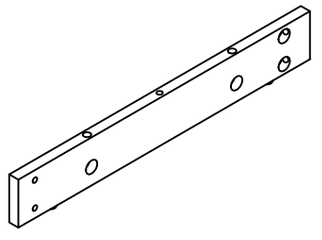
13 x1 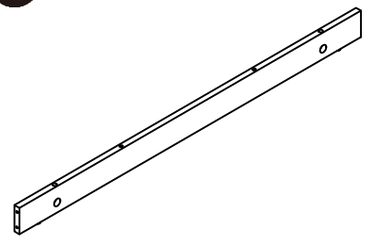	14 x3 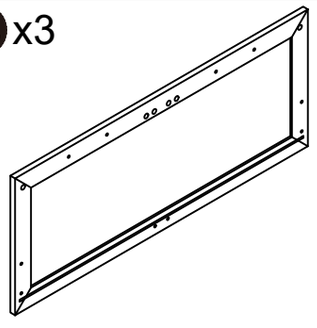	15 x1 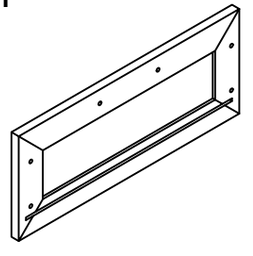

Parts List

16 x1 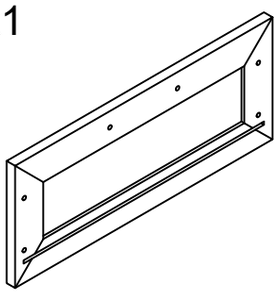	17 x3 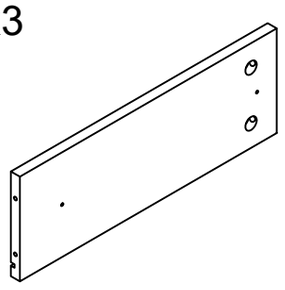	18 x3 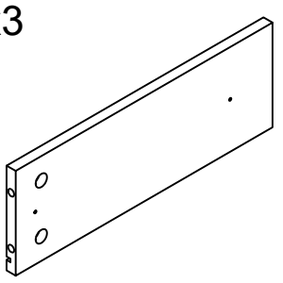
19 x3 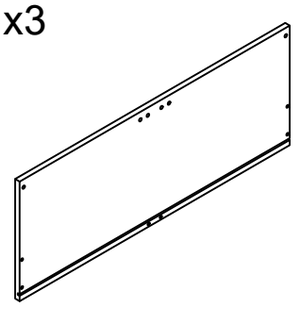	20 x3 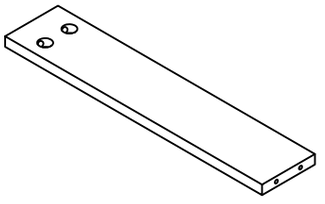	21 x2 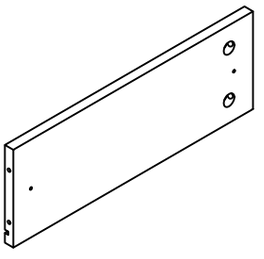
22 x2 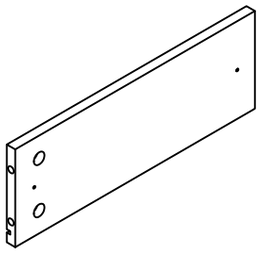	23 x2 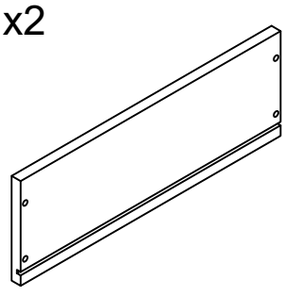	24 x2 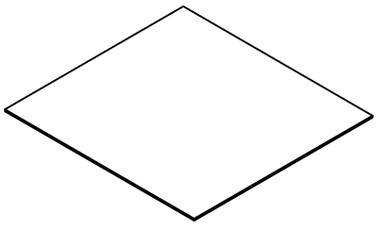
25 x3 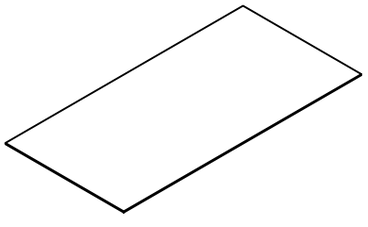	26 x1 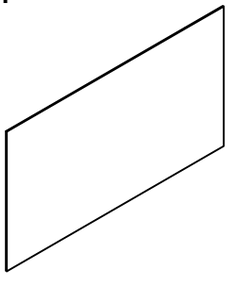	27 x1 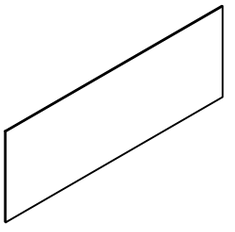
28 x1 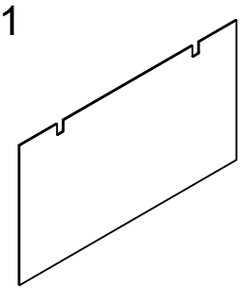	29 x12 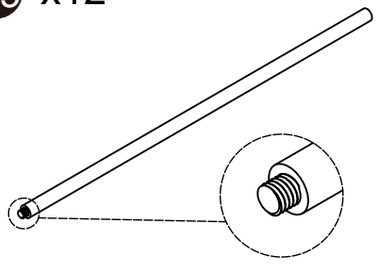	30 x2 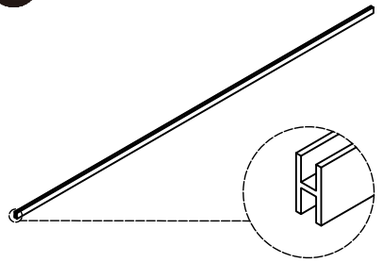

Tool sheet

A X2  ST5*40mm	B X72+5  ST6*40mm	C X72+5  Ø15*9.5mm	D X46+4  ST3.5*12mm
E X32+2 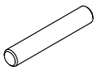 Ø6*35mm	F X36+2 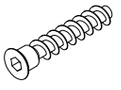 ST5*40mm	G X18+1 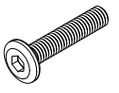 M6*20mm	H X16  ST3.5*14mm
I X12 	J X16 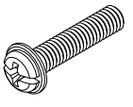 M4*14mm	K X8 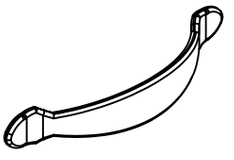	L X2 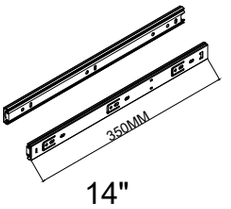 14"
M X3 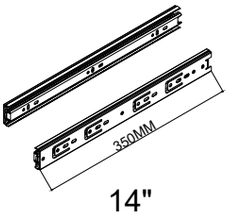 14"	N X2 	O X2 	X1 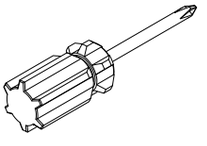
X1 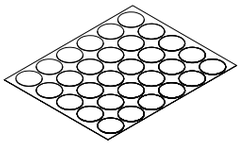 38	X1 	X1 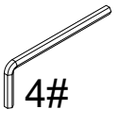	

ASSEMBLY INSTRUCTION

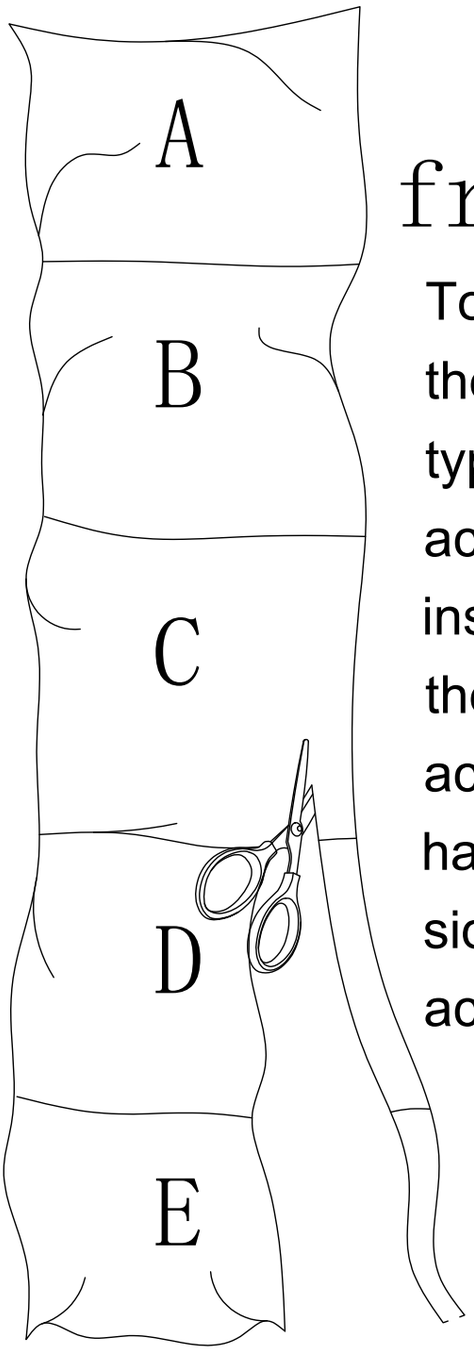

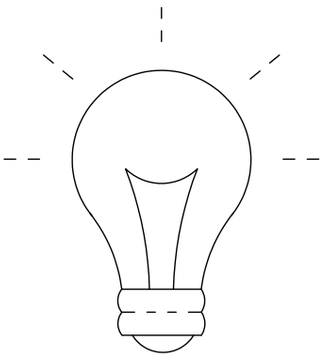

friendly reminder

To avoid errors and confusion during the installation of accessories, use the type and quantity of hardware accessories according to the installation procedure described in the instructions. First, unroll the accessories bag and lay out the hardware accessories, cut holes in the side, and take out the hardware accessories

ASSEMBLY INSTRUCTION

STEP 1

B X6



ST6*40

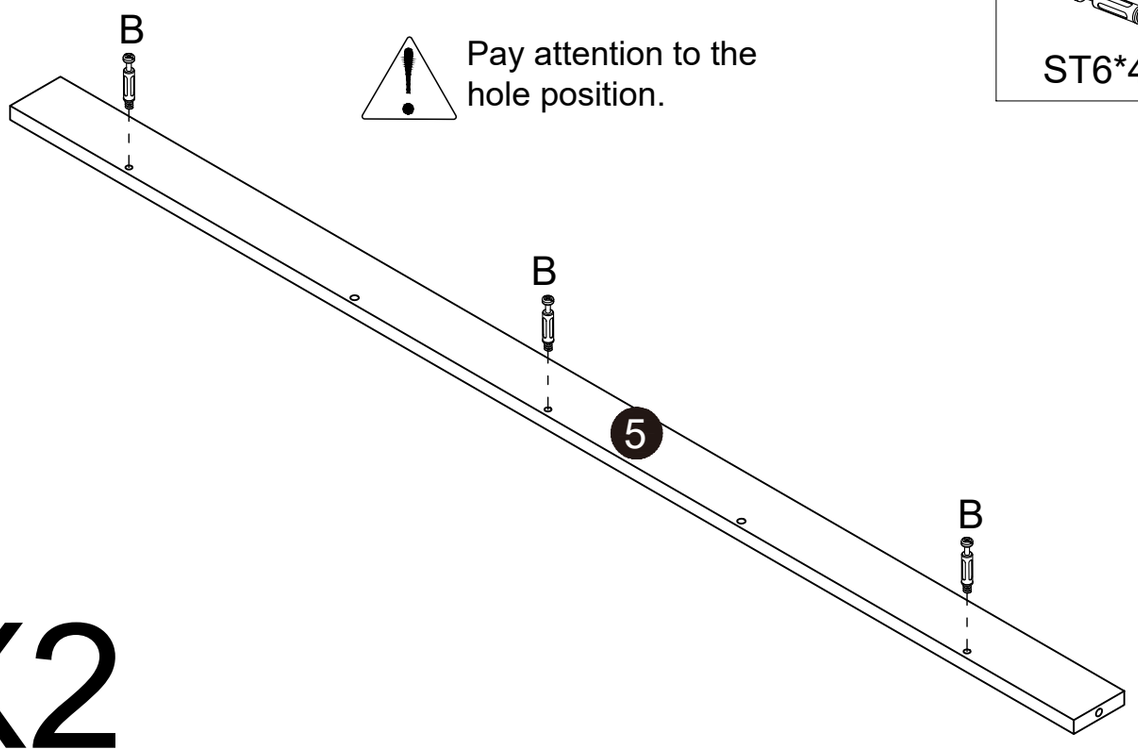

Pay attention to the hole position.

X2

STEP 2

B X6



ST6*40

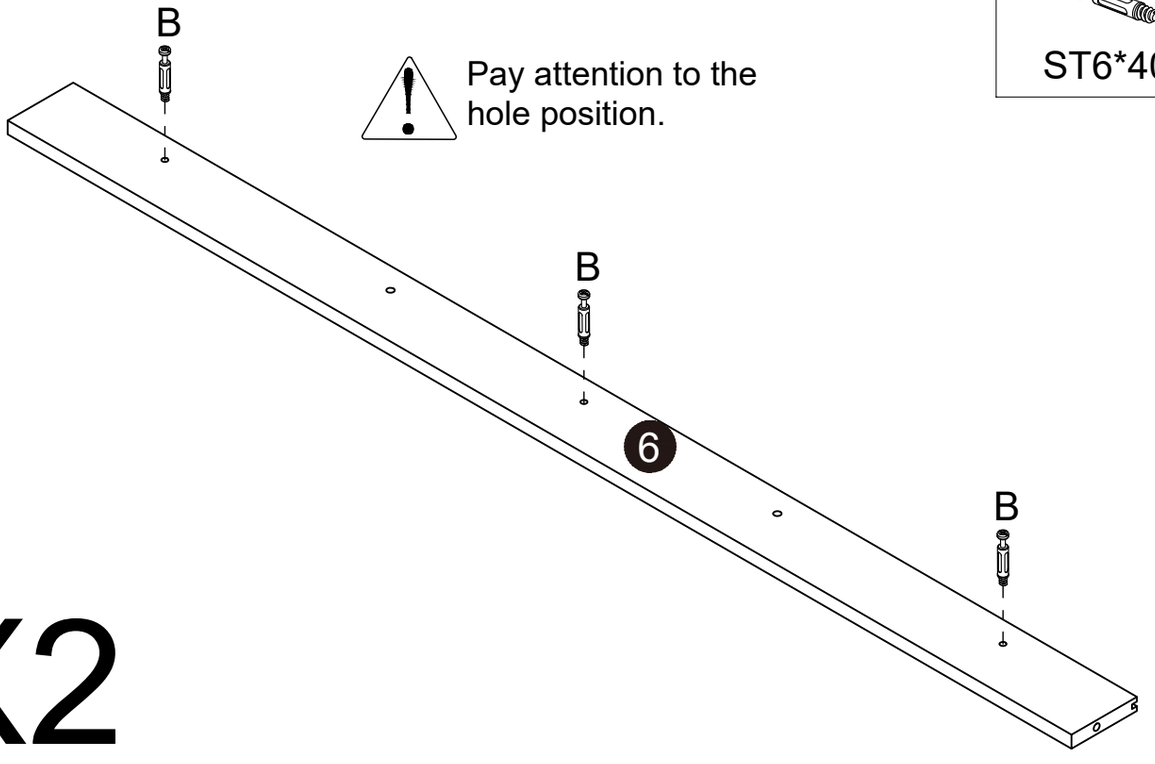

Pay attention to the hole position.

X2

ASSEMBLY INSTRUCTION

STEP 3

Pay attention to the hole position.

E X4



Ø6*35

STEP 4

The assembly here is smooth and even.

C X3

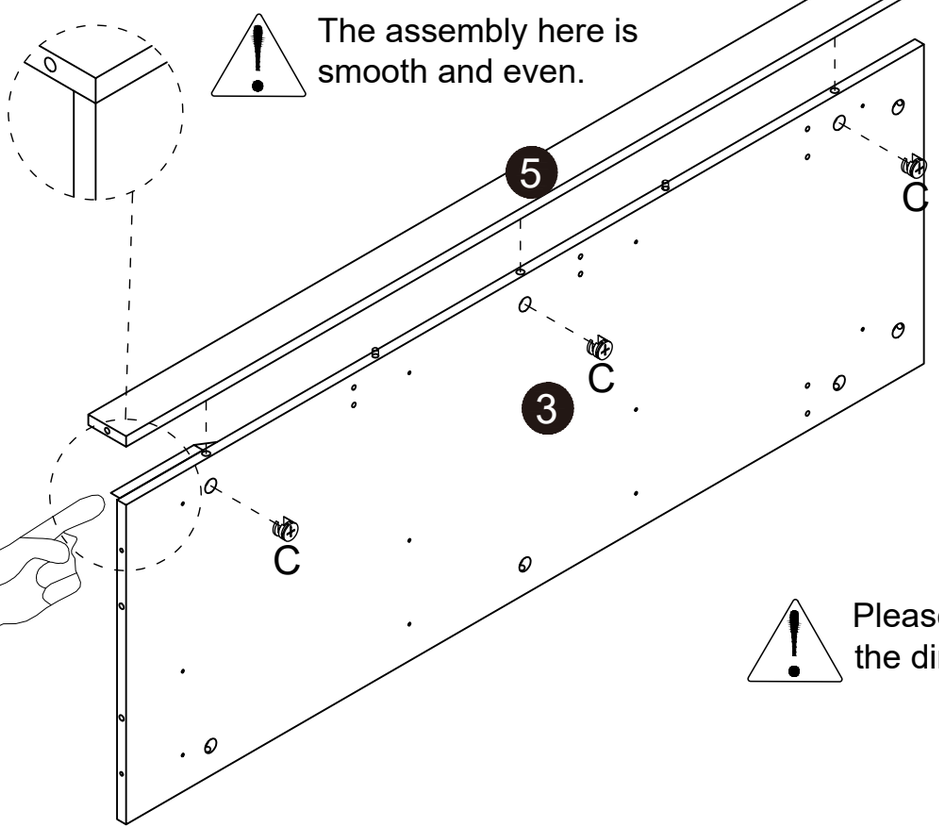

Ø15*9.5

Please pay attention to the direction of No. 3

ASSEMBLY INSTRUCTION

STEP 5

C X3

Ø15*9.5

Please pay attention to the direction of the slot.



STEP 6

E X4

Ø6*35

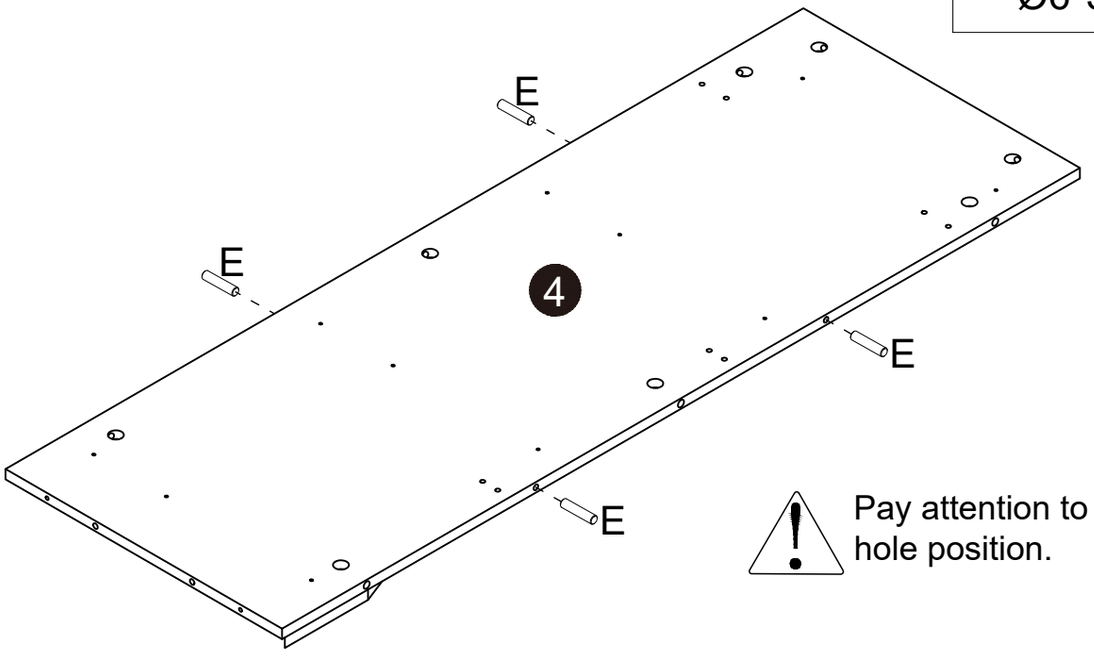

Pay attention to the hole position.

ASSEMBLY INSTRUCTION

STEP 7

C X3

Ø15*9.5

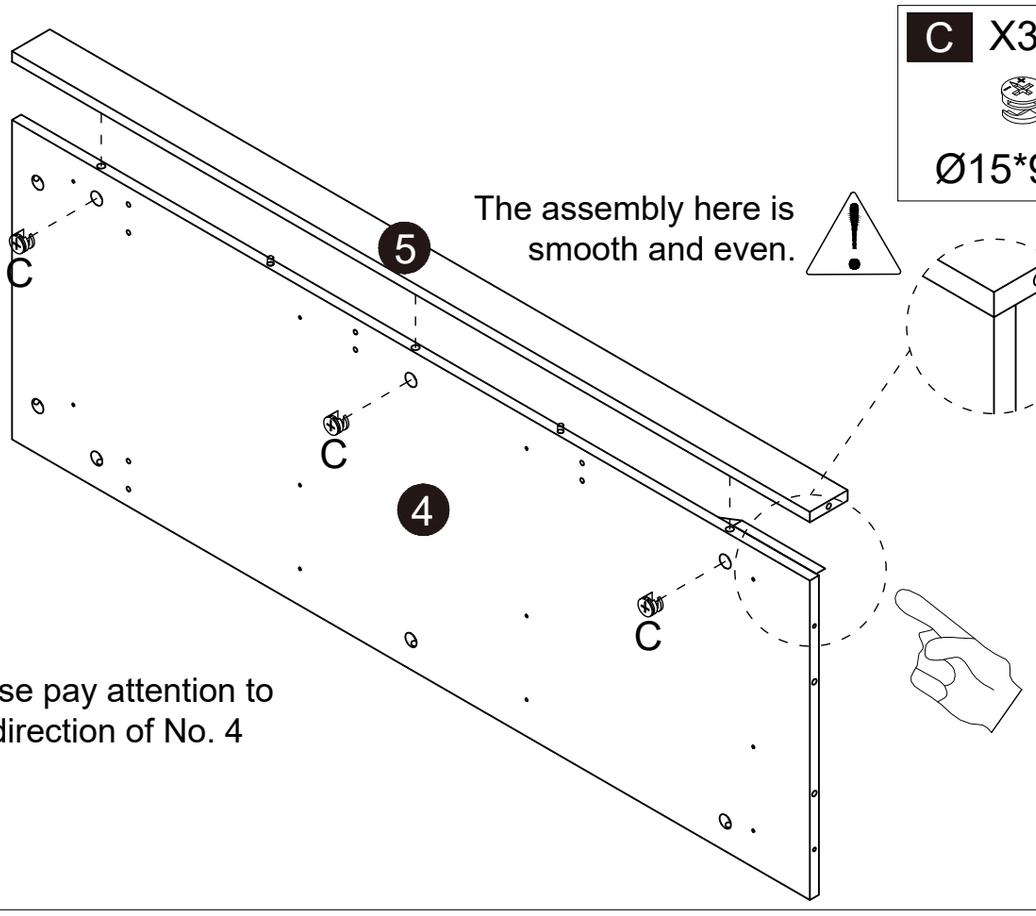

The assembly here is smooth and even.

Please pay attention to the direction of No. 4

STEP 8

C X3

Ø15*9.5

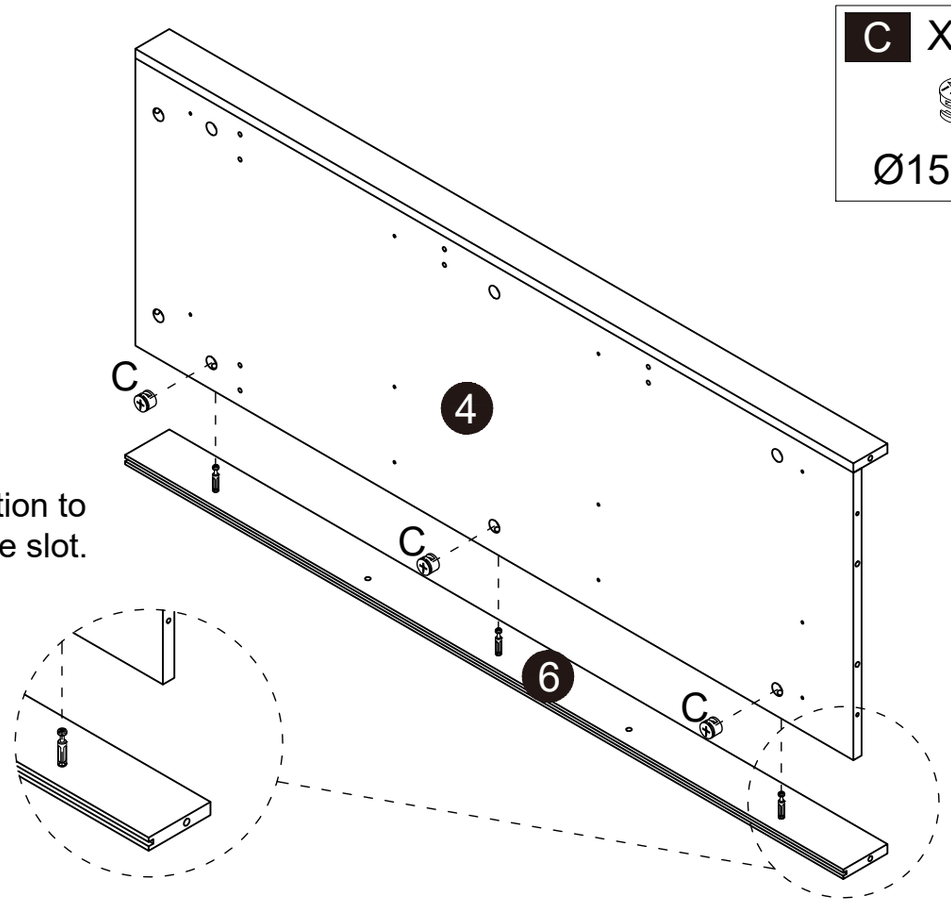

Please pay attention to the direction of the slot.

ASSEMBLY INSTRUCTION

STEP 9

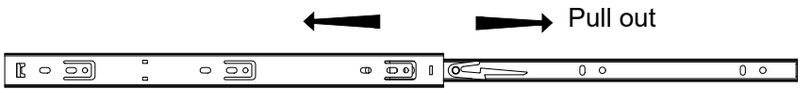

Disconnect the keyboard rail with the BLACK PLASTIC PART.It needs to be pulled down to disconnect the runners.

D X2



ST3.5*12

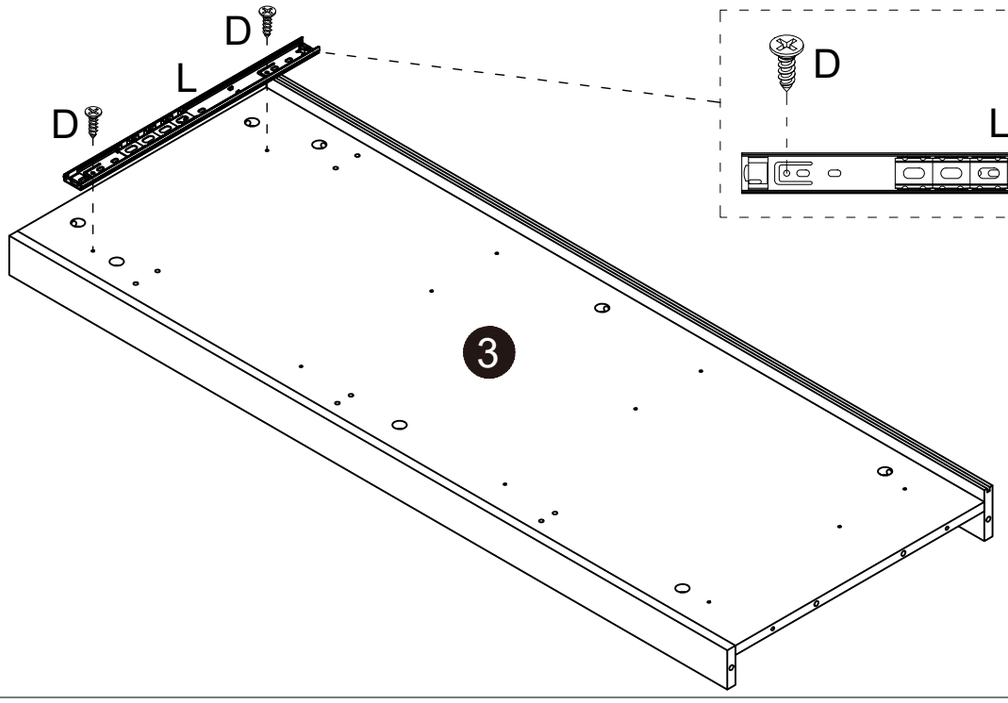

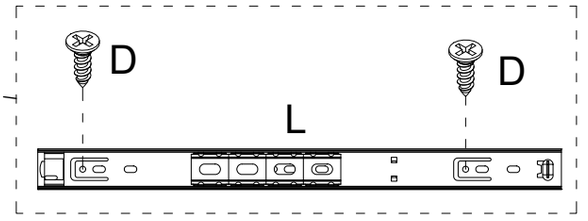

STEP 10

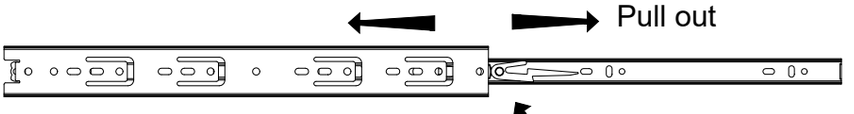

Disconnect the keyboard rail with the BLACK PLASTIC PART.It needs to be pulled down to disconnect the runners.

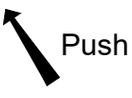

D X9



ST3.5*12

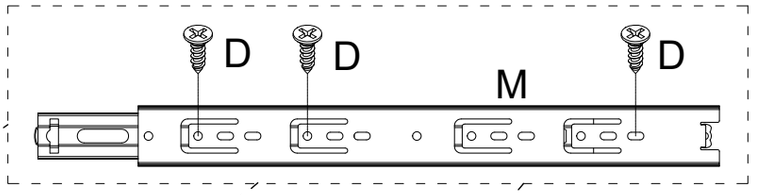

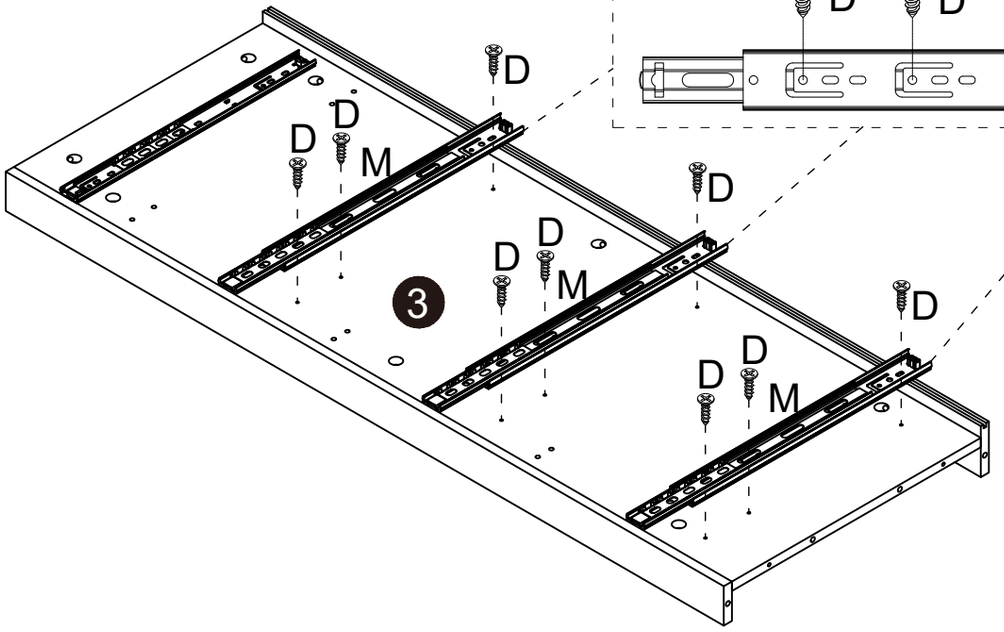

ASSEMBLY INSTRUCTION

STEP 11

B X8



ST6*40

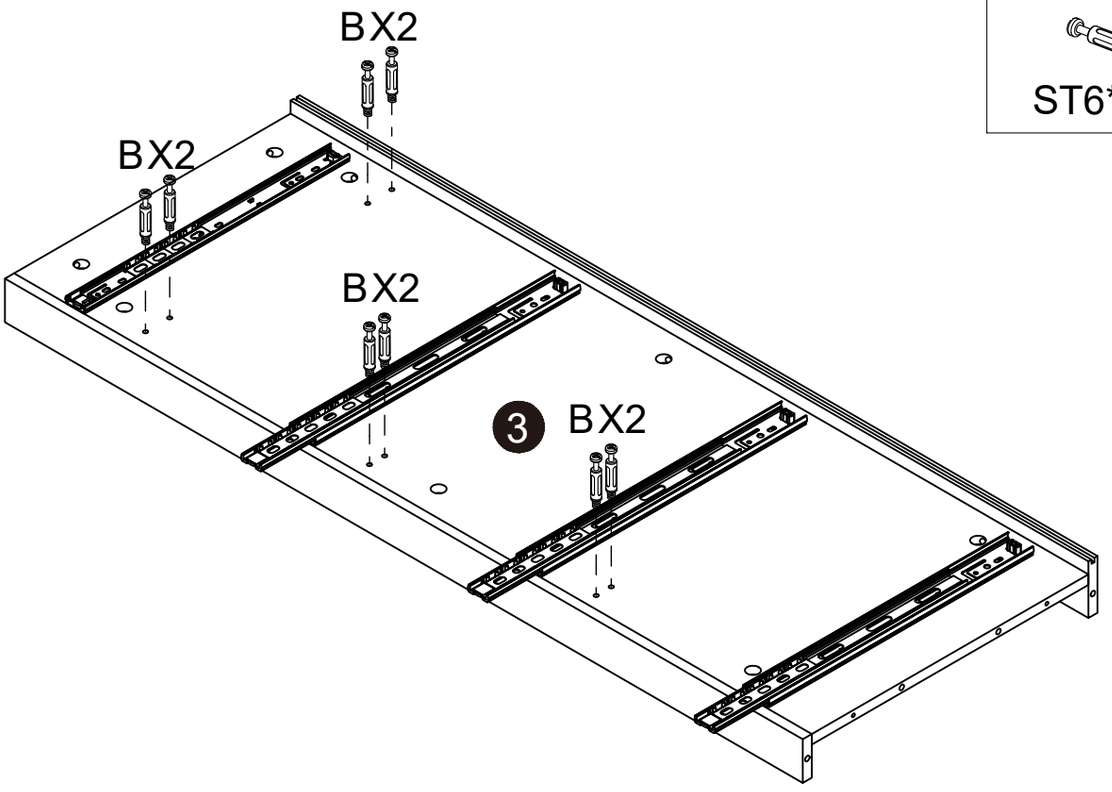

STEP 12

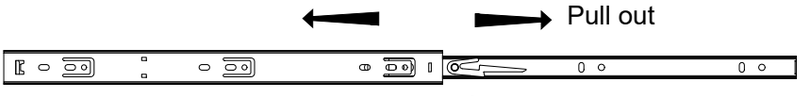

Disconnect the keyboard rail with the BLACK PLASTIC PART.It needs to be pulled down to disconnect the runners.

Push

D X2



ST3.5*12

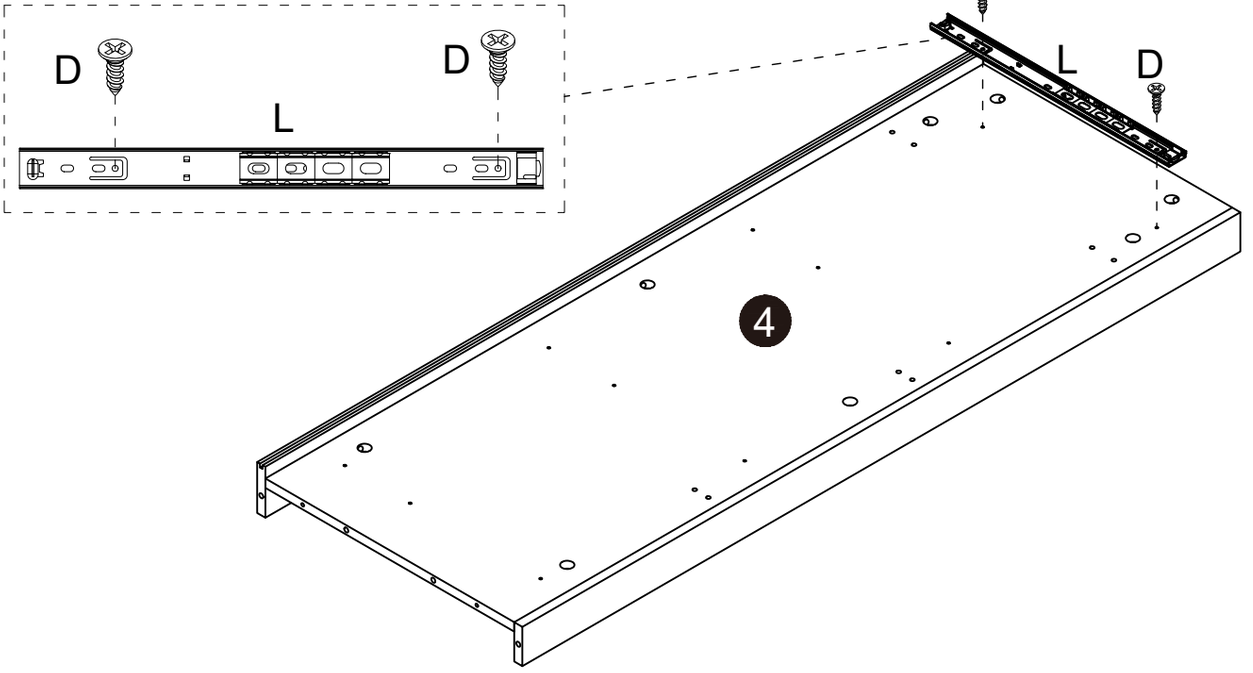

ASSEMBLY INSTRUCTION

STEP 13

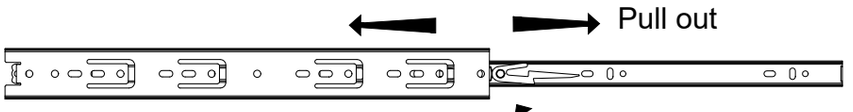

Disconnect the keyboard rail with the BLACK PLASTIC PART.It needs to be pulled down to disconnect the runners.

D X9

ST3.5*12

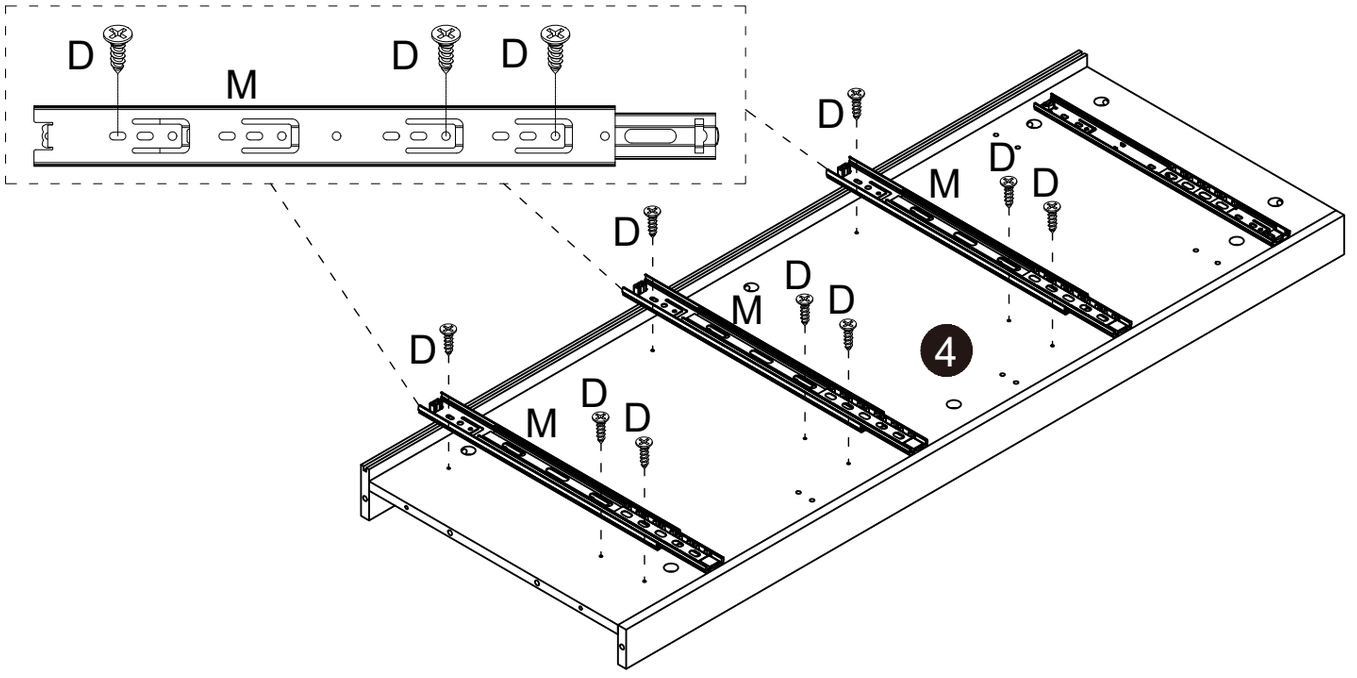

STEP 14

B X8

ST6*40

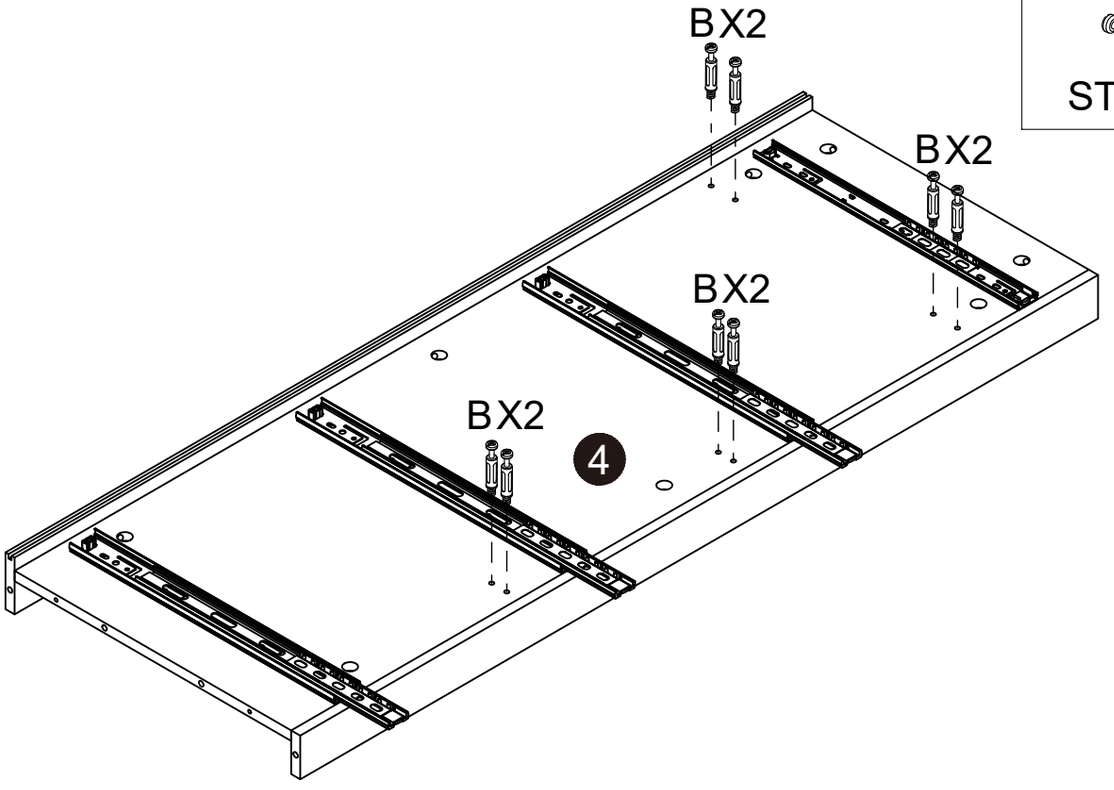

ASSEMBLY INSTRUCTION

STEP 15

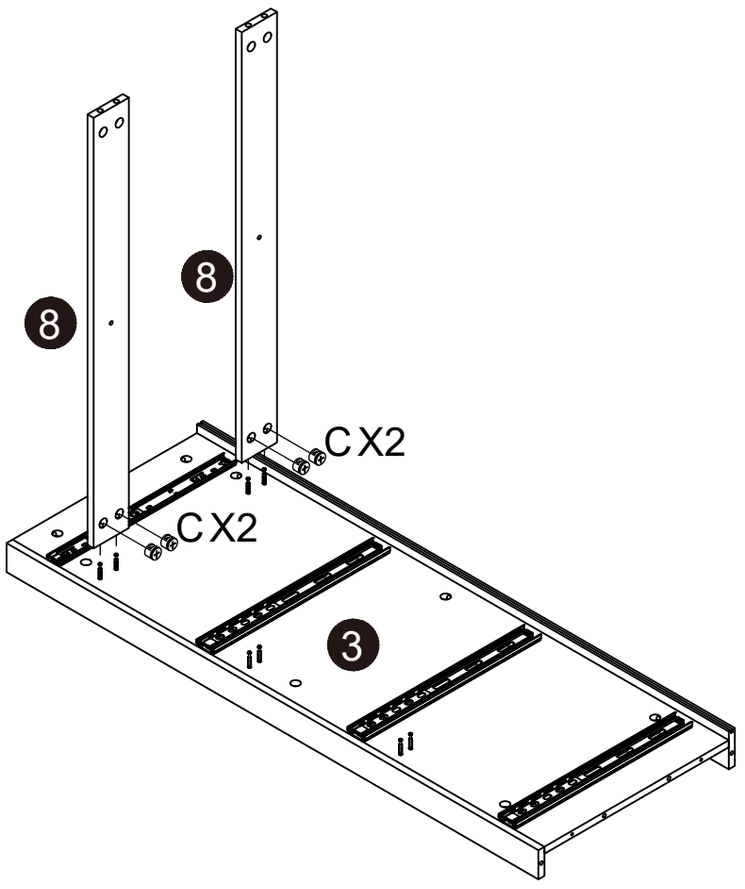

C X4



Ø15*9.5

STEP 16

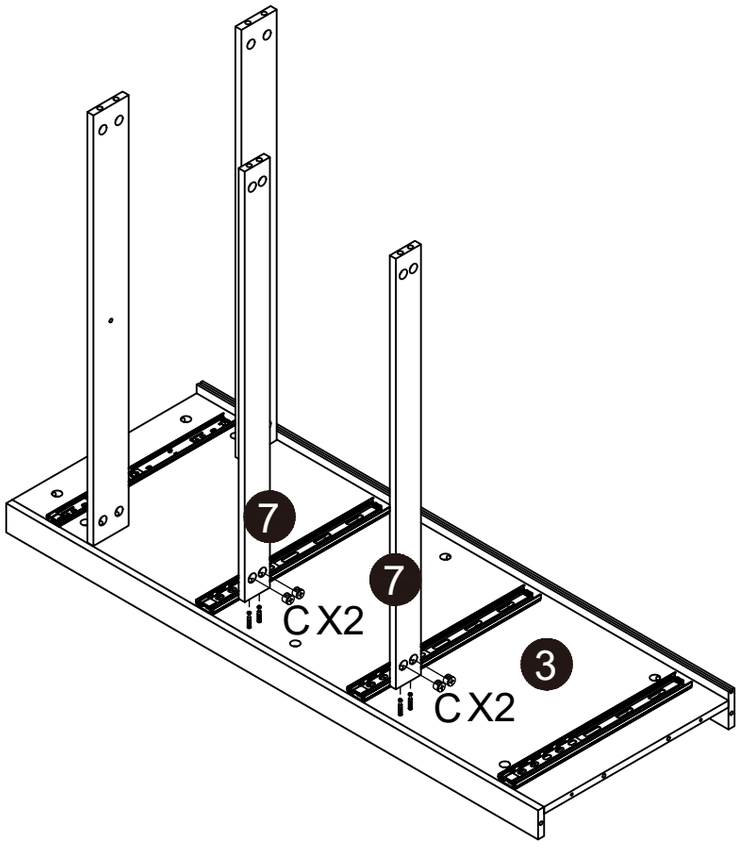

C X4



Ø15*9.5

ASSEMBLY INSTRUCTION

STEP 17

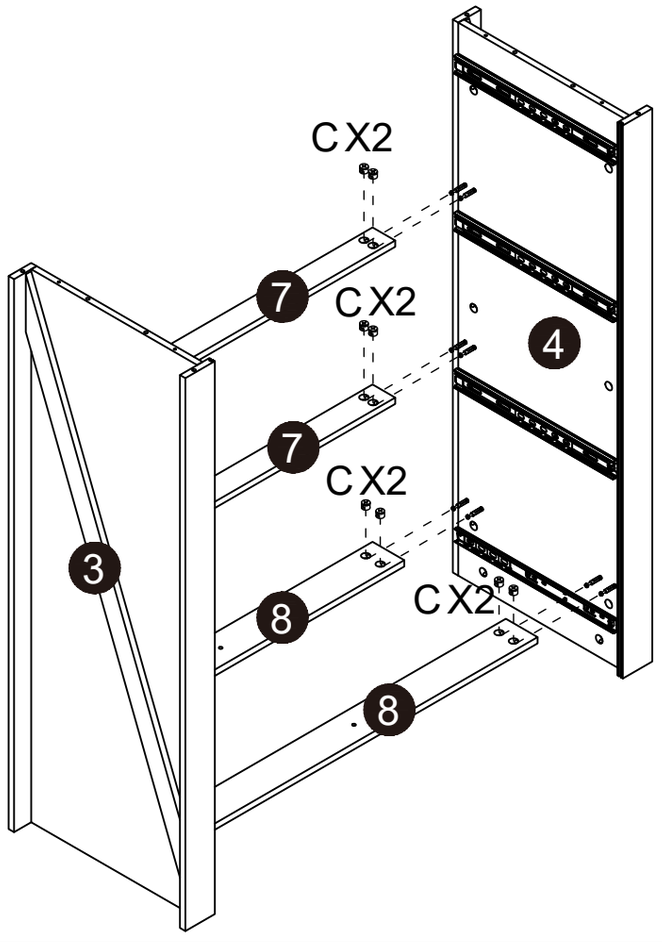

C X8

Ø15*9.5

STEP 18

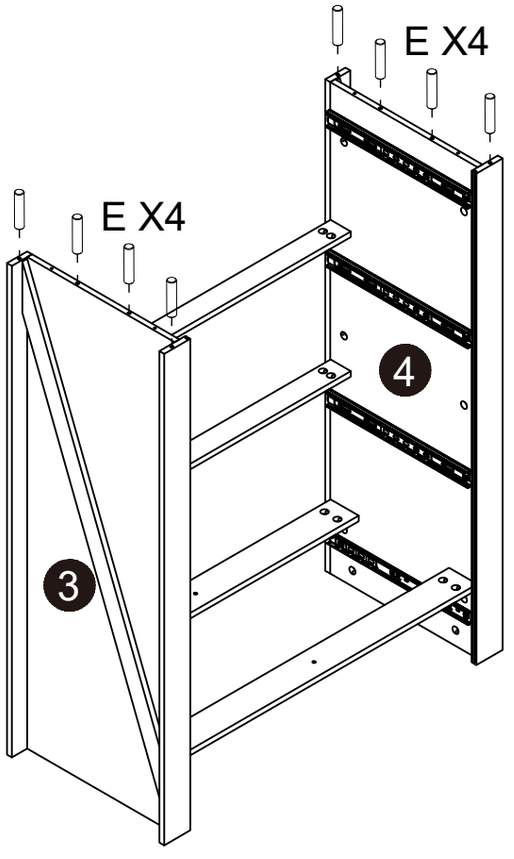

E X8

Ø6*35

ASSEMBLY INSTRUCTION

STEP 19

Pay attention to the hole position.

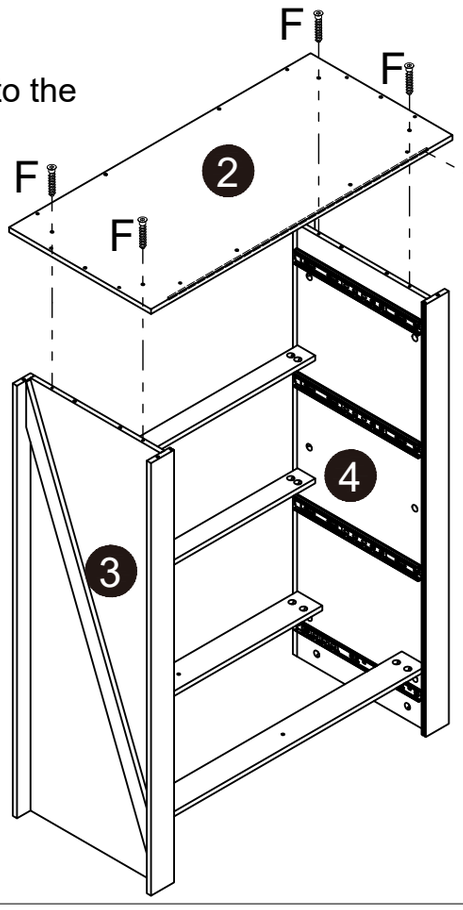

Please pay attention to the direction of No. 2

F X4

ST5*40

STEP 20

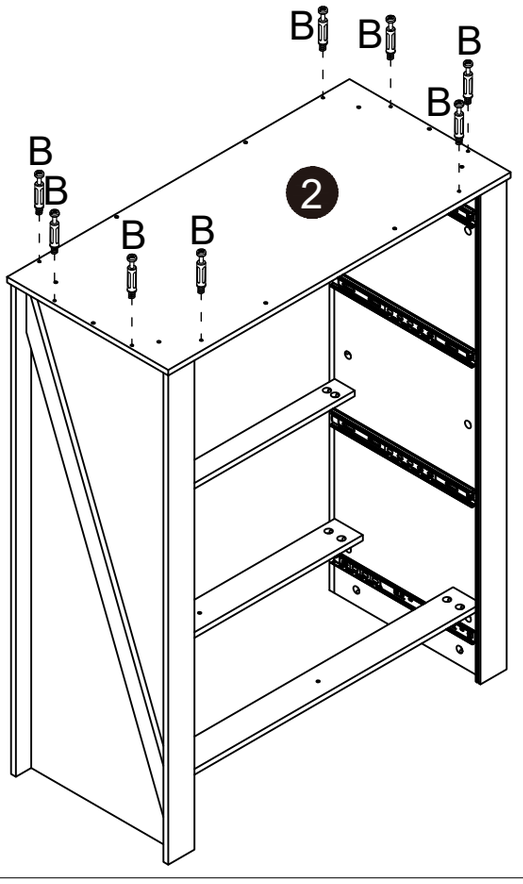

B X8

ST6*40

ASSEMBLY INSTRUCTION

STEP 21

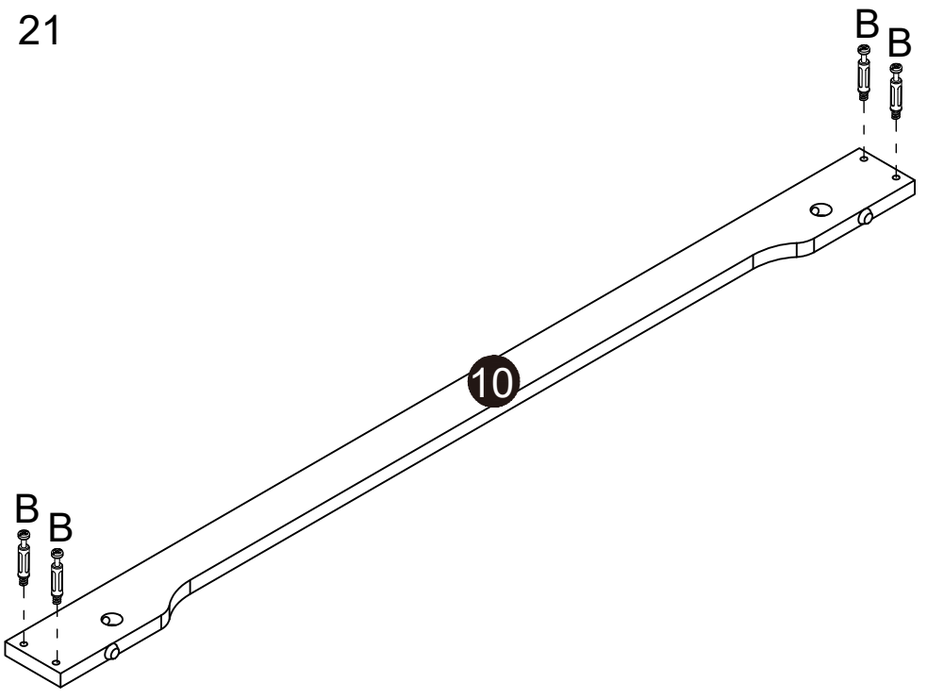

B X4



ST6*40

STEP 22

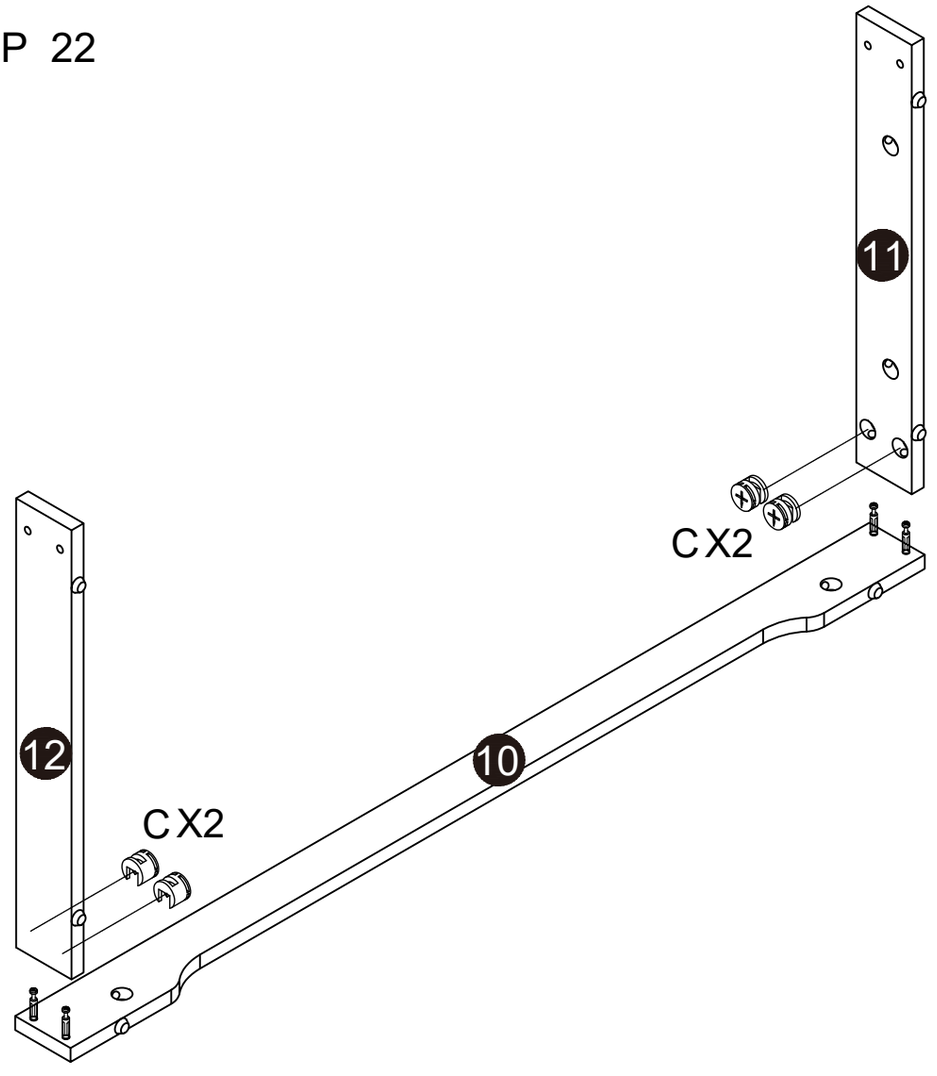

C X4



Ø15*9.5

ASSEMBLY INSTRUCTION

STEP 23

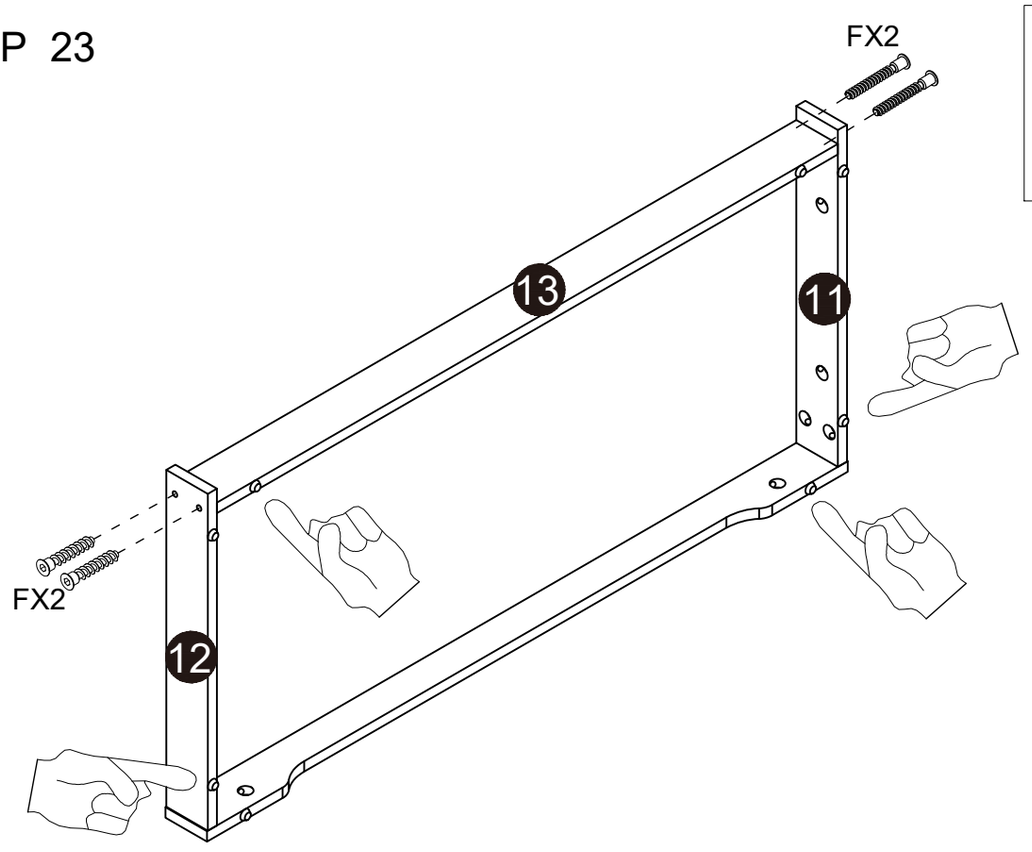

F X4



ST5*40

STEP 24

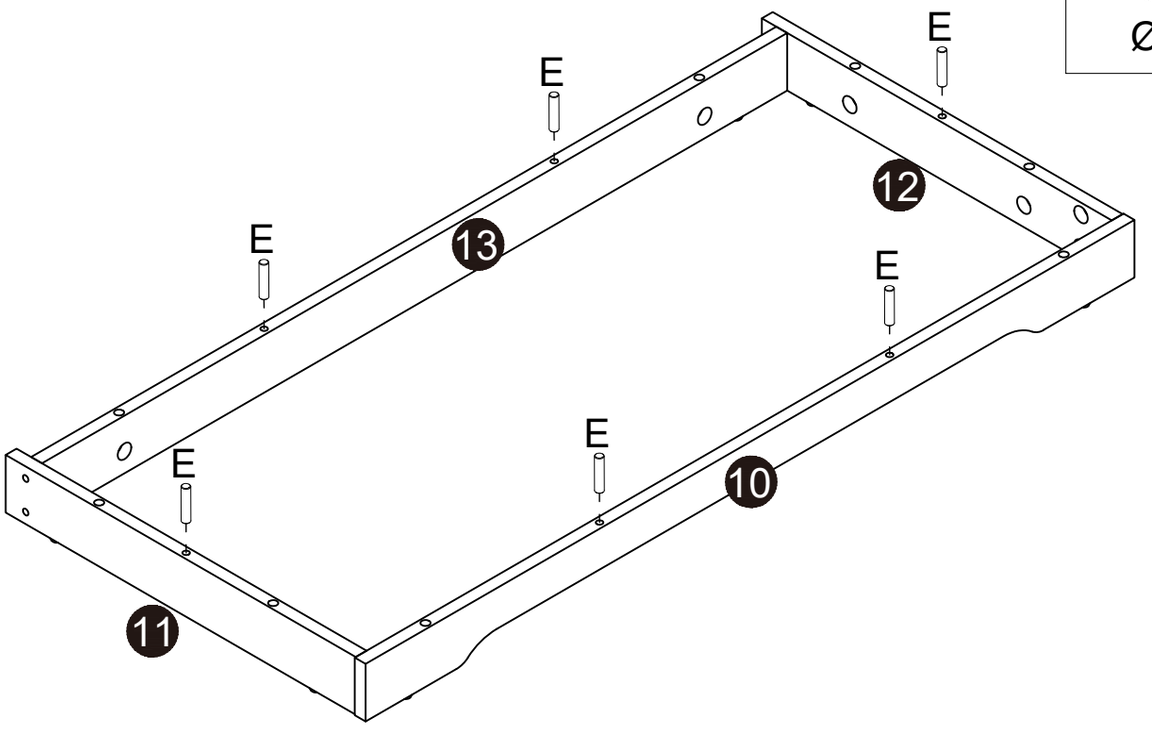

E X6



Ø6*35

ASSEMBLY INSTRUCTION

STEP 25

Please note that No. 10 is in front of you.

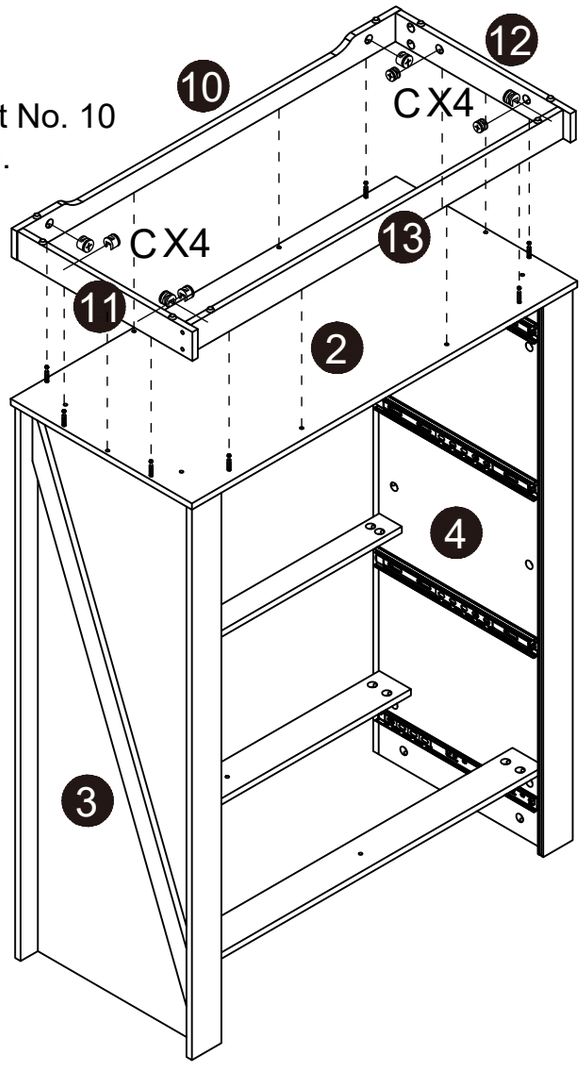

C X8

Ø15*9.5

STEP 26

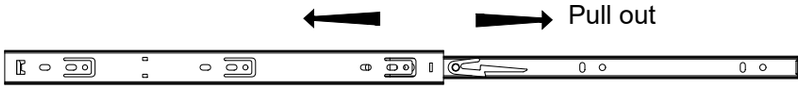

Disconnect the keyboard rail with the BLACK PLASTIC PART.It needs to be pulled down to disconnect the runners.

D X2

ST3.5*12

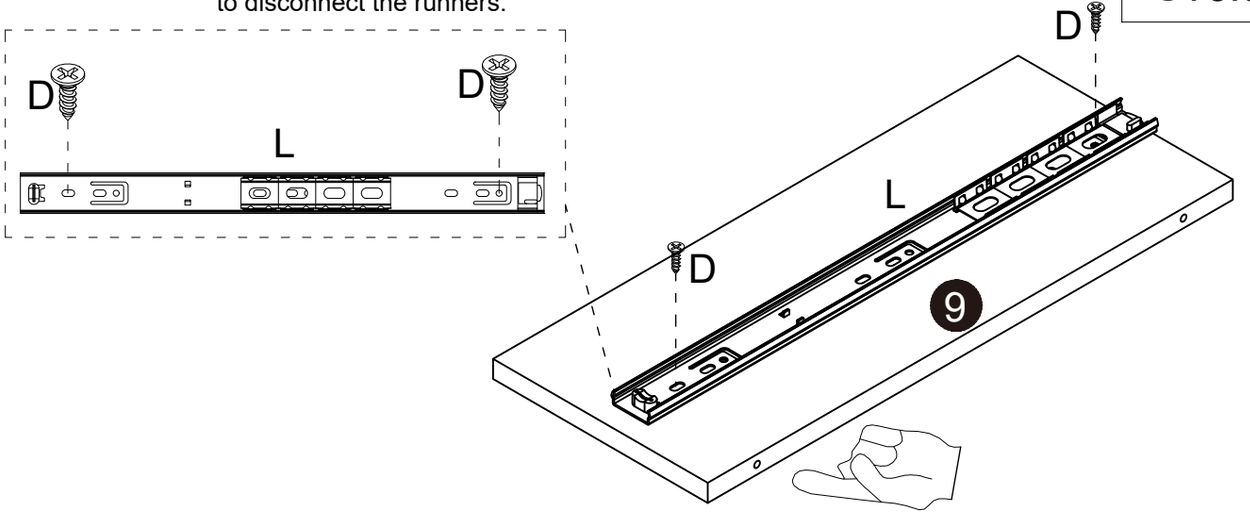

ASSEMBLY INSTRUCTION

STEP 27

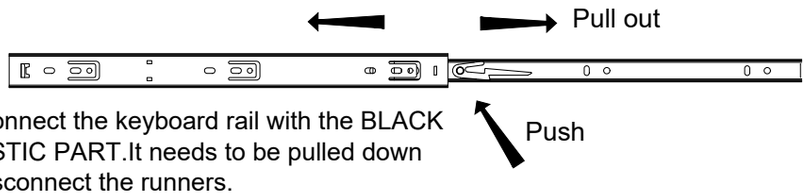

Disconnect the keyboard rail with the BLACK PLASTIC PART.It needs to be pulled down to disconnect the runners.

D X2

ST3.5*12

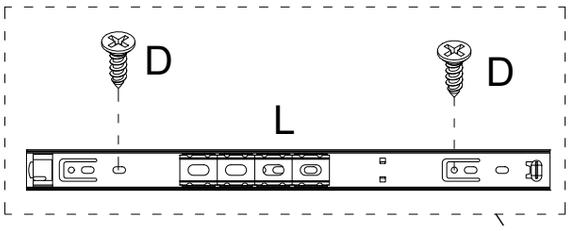

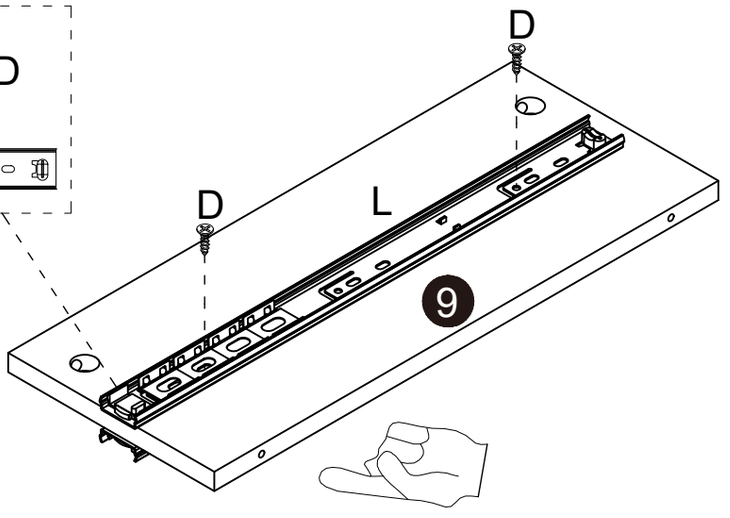

STEP 28

F X2

ST5*40

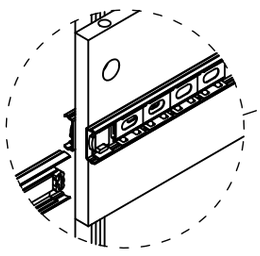

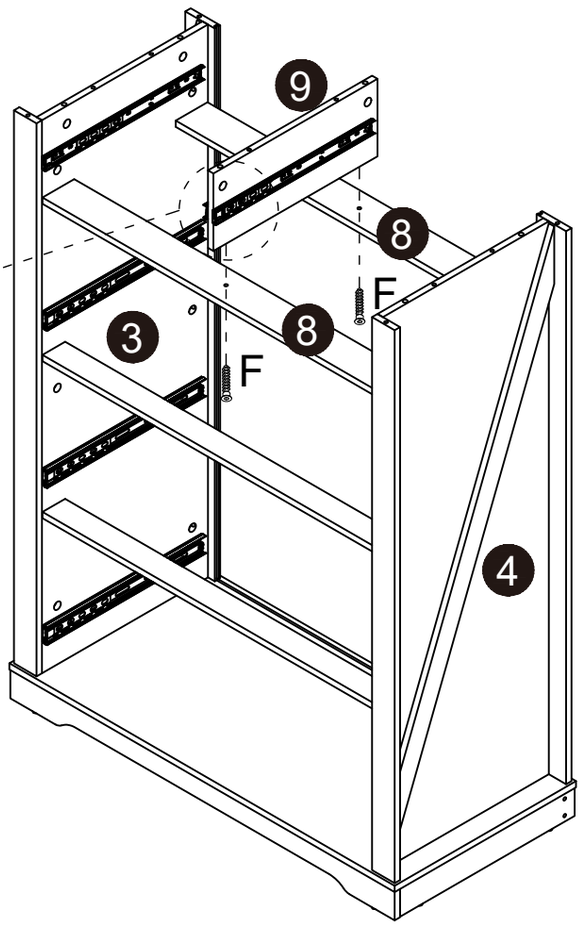

Please pay attention to the direction of No. 9

ASSEMBLY INSTRUCTION

STEP 29

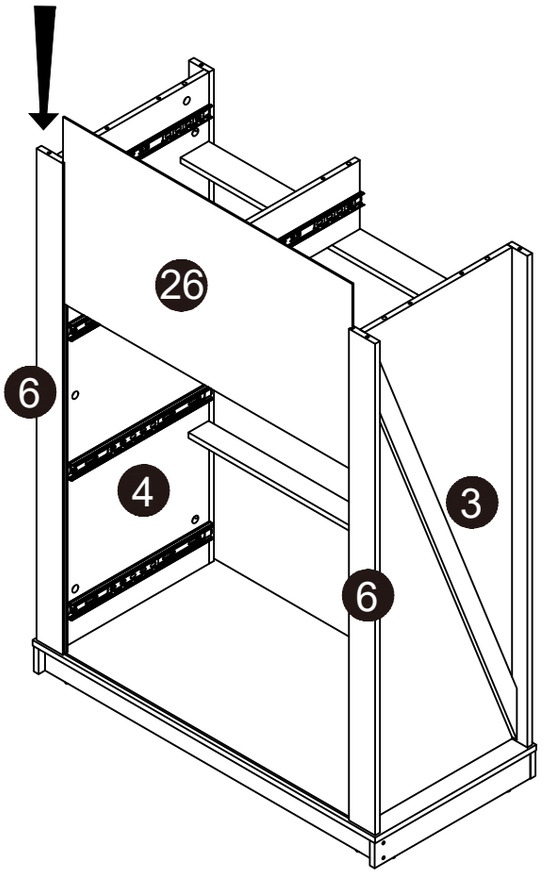

STEP 30

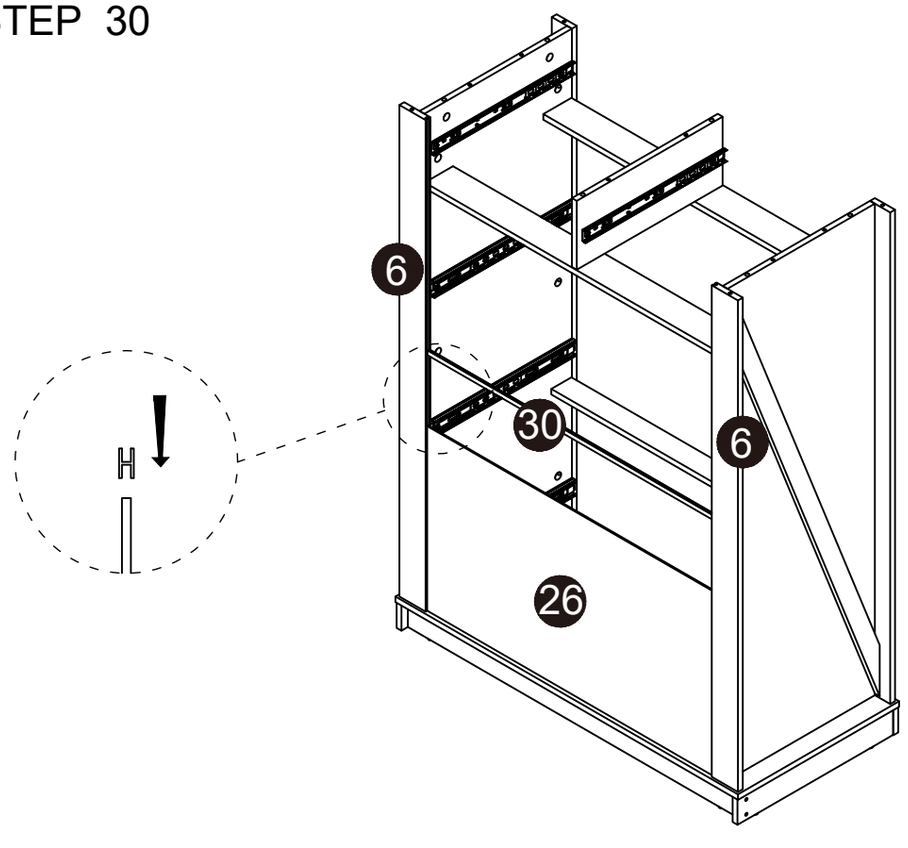

ASSEMBLY INSTRUCTION

STEP 31

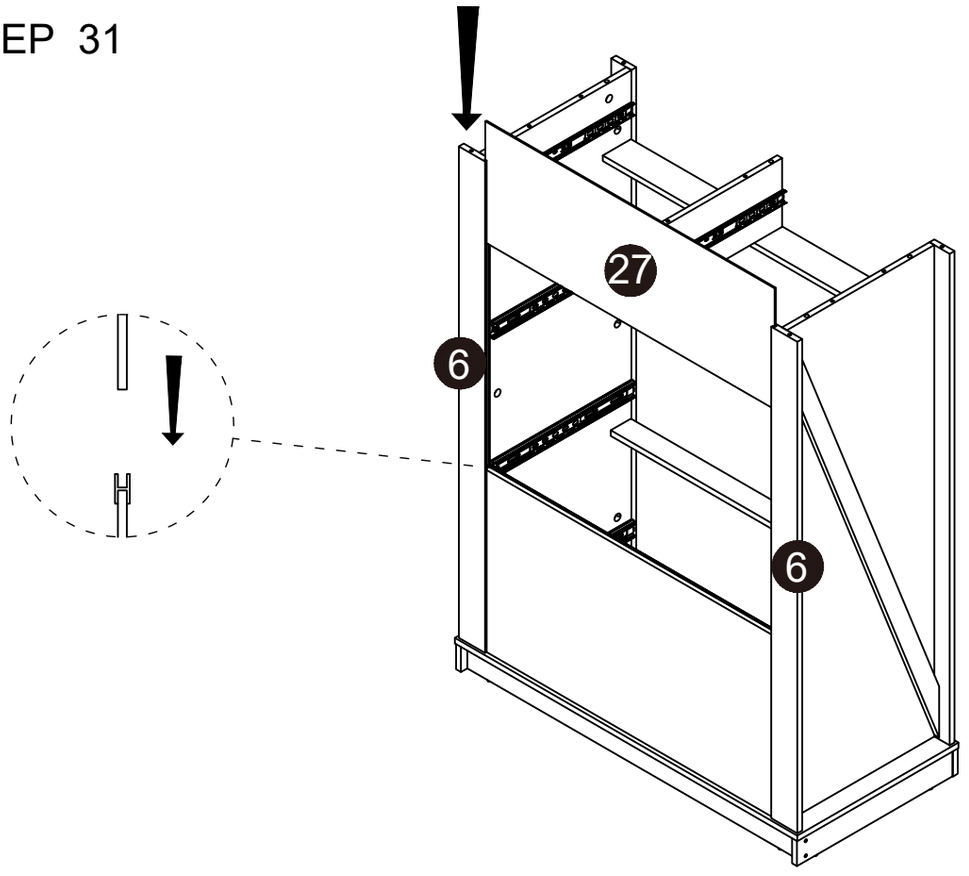

STEP 32

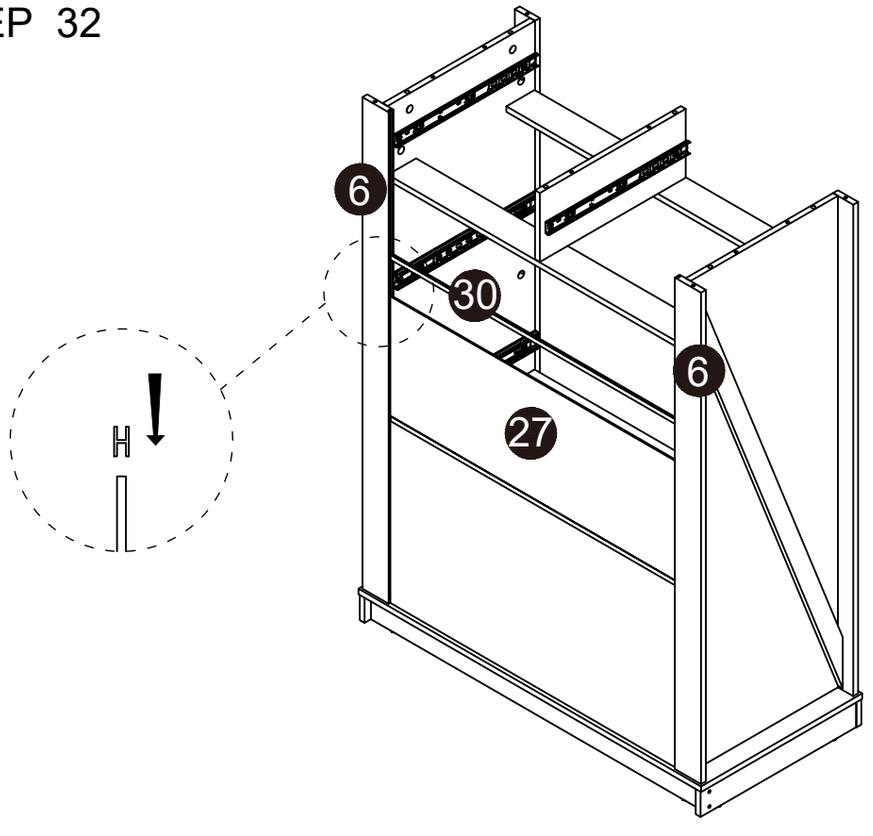

ASSEMBLY INSTRUCTION

STEP 33

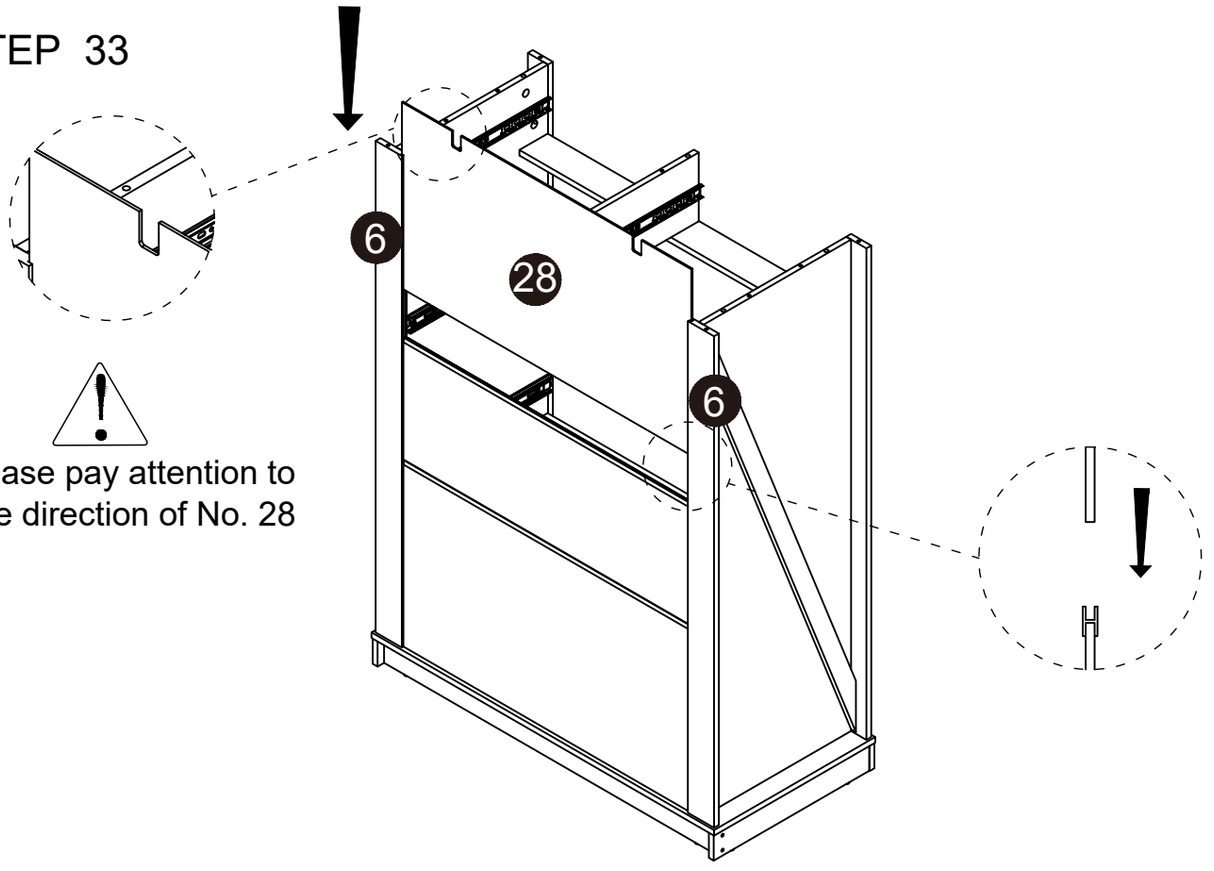

Please pay attention to the direction of No. 28

STEP 34

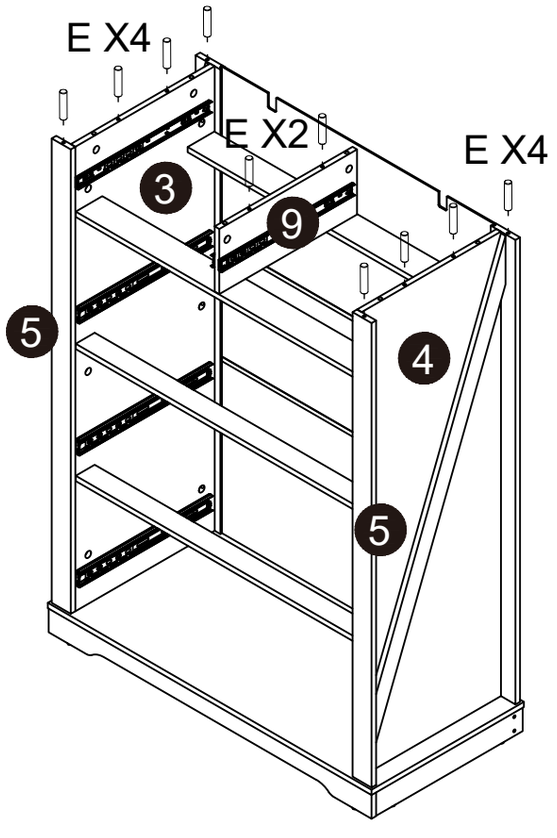

E X10

Ø6*35

ASSEMBLY INSTRUCTION

STEP 35

N X2	H X4
	 ST3.5*14mm

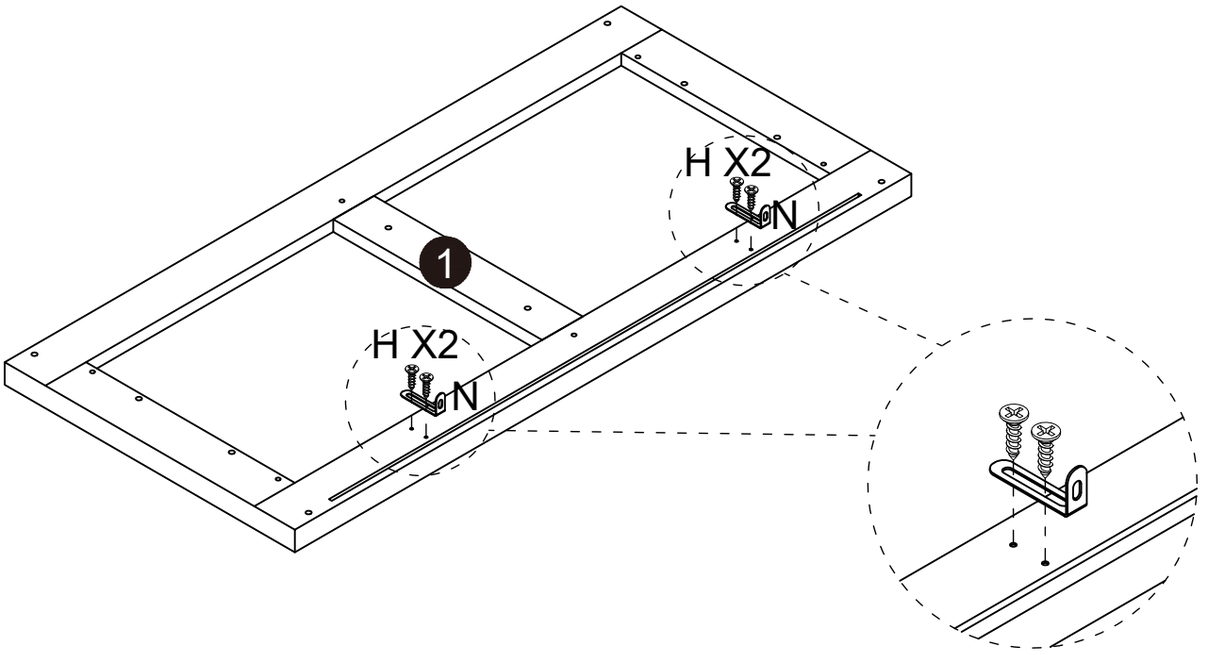

STEP 36

B X6
 ST6*40



Pay attention to the hole position.

ASSEMBLY INSTRUCTION

STEP 37

C X6	
Ø15*9.5	18

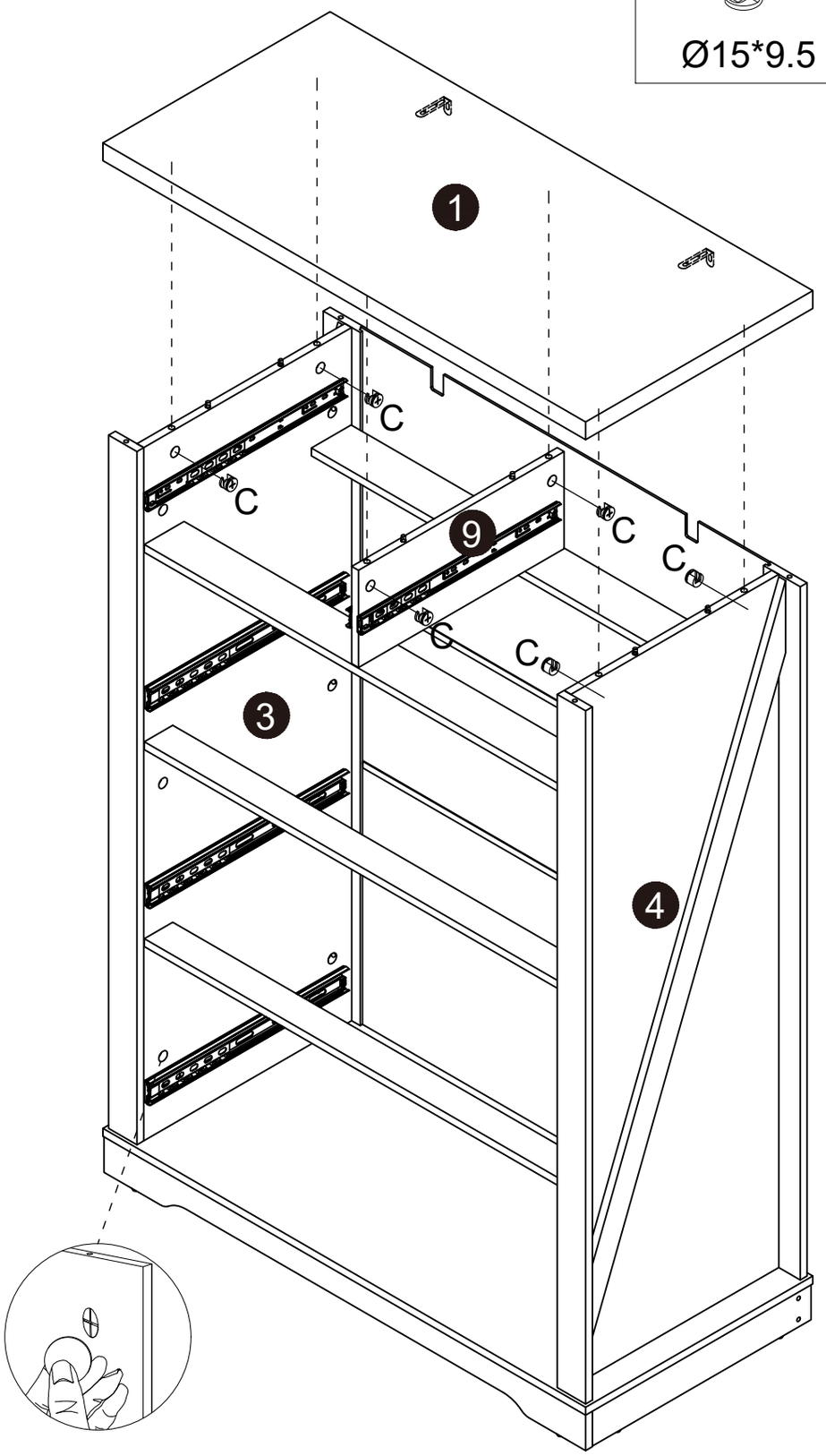

ASSEMBLY INSTRUCTION

STEP 38

I X12	H X12
	 ST3.5*14

Measure the length of the two diagonals a and b from the back of the cabinet and keep a and b equal in length

a=b √

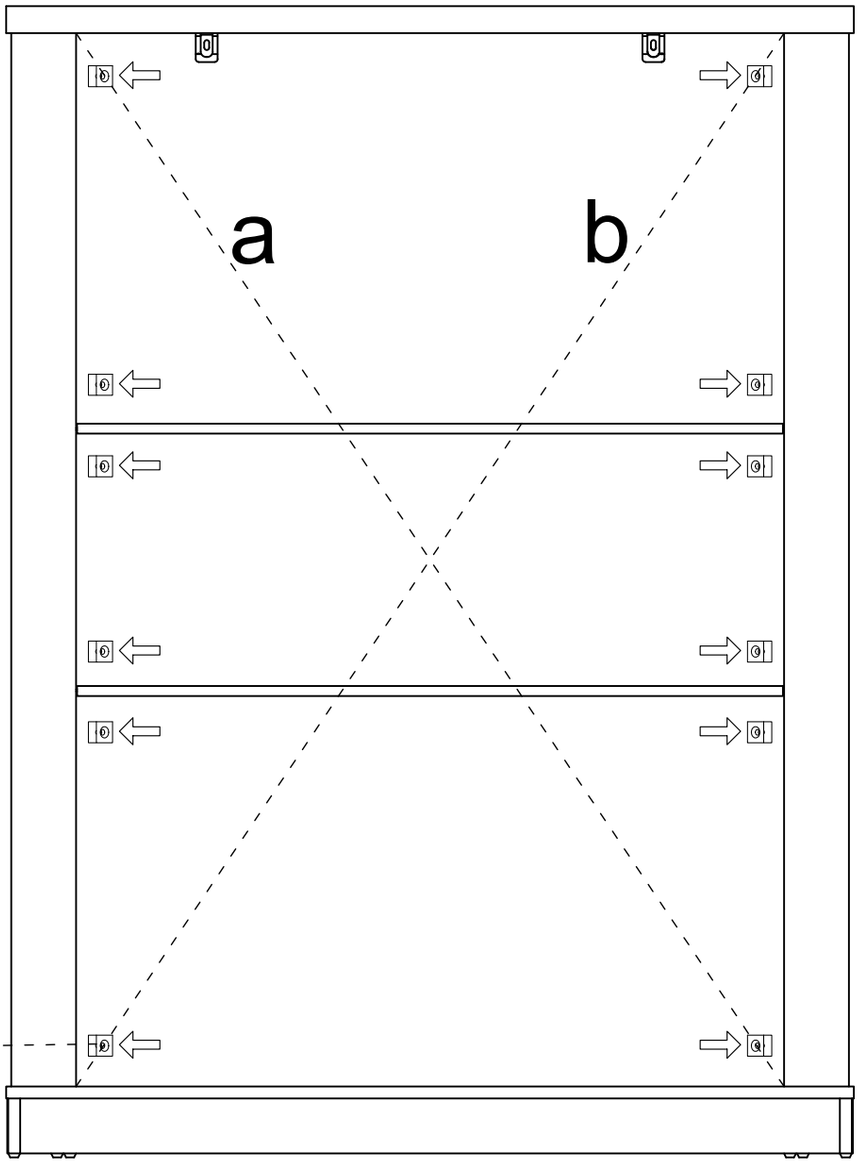

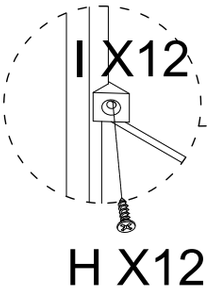

ASSEMBLY INSTRUCTION

STEP 39

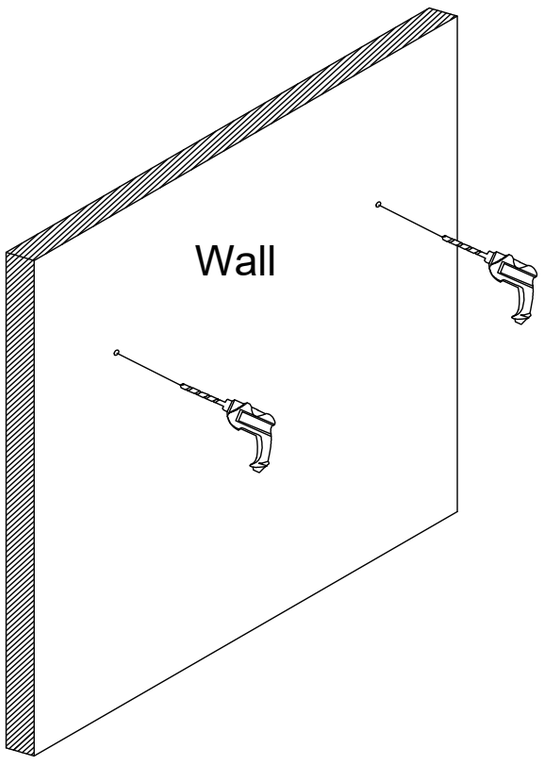

STEP 40

O X2

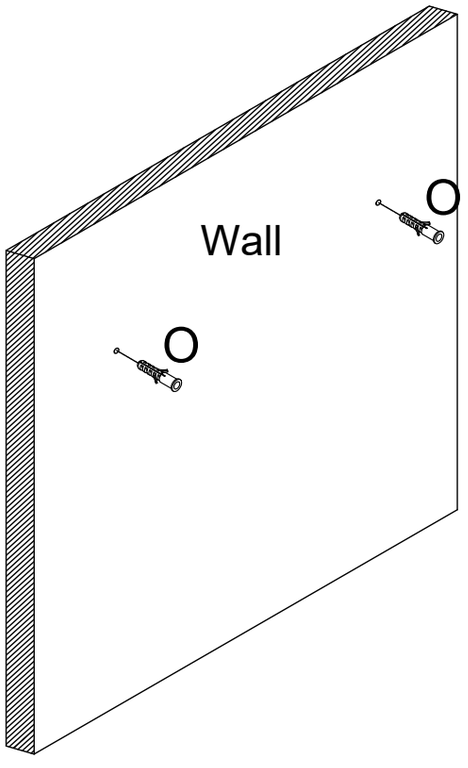

ASSEMBLY INSTRUCTION

STEP 41

A X2

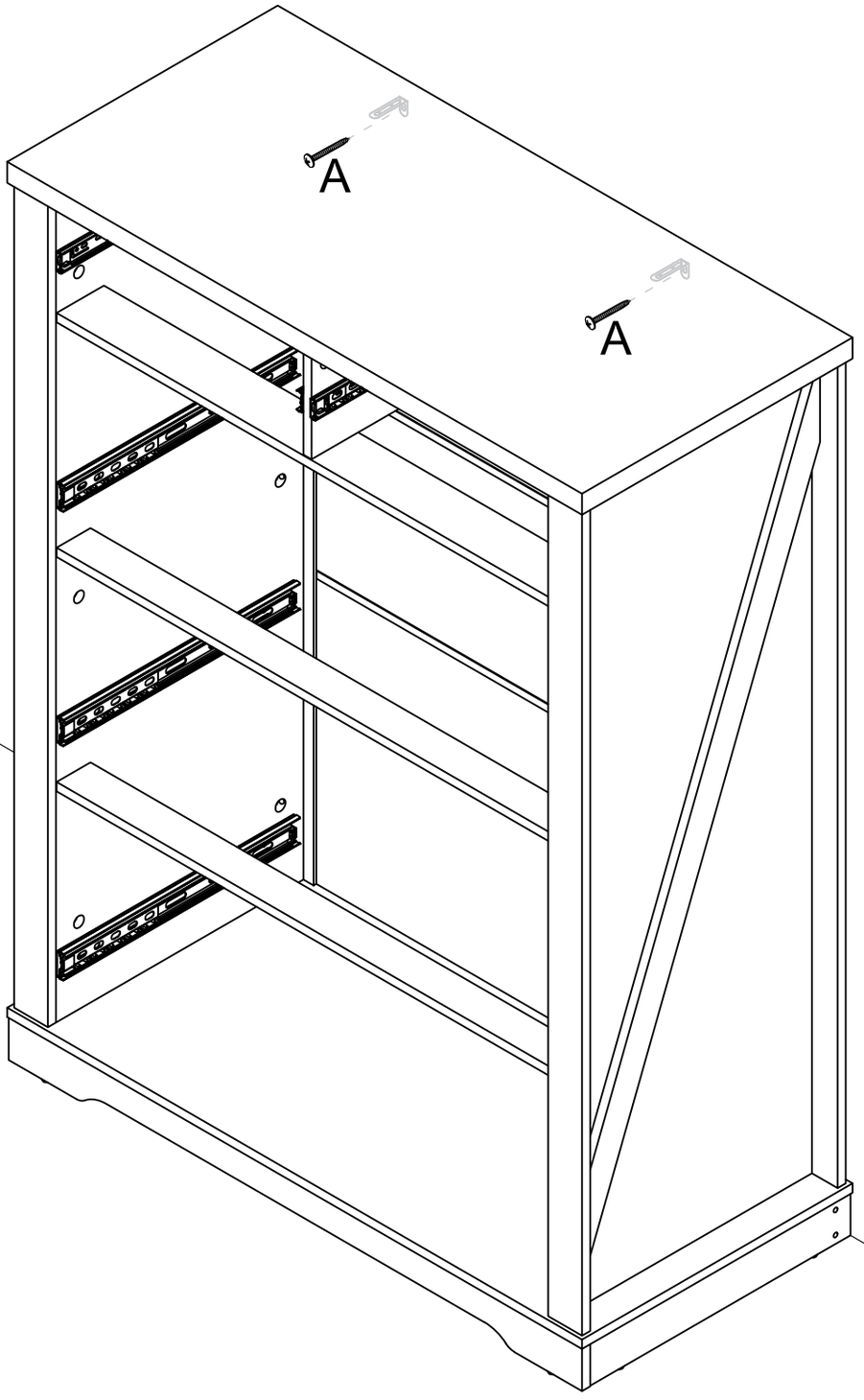

ASSEMBLY INSTRUCTION

STEP 42

B X4

ST6*40

STEP 43

C X4



Ø15*9.5

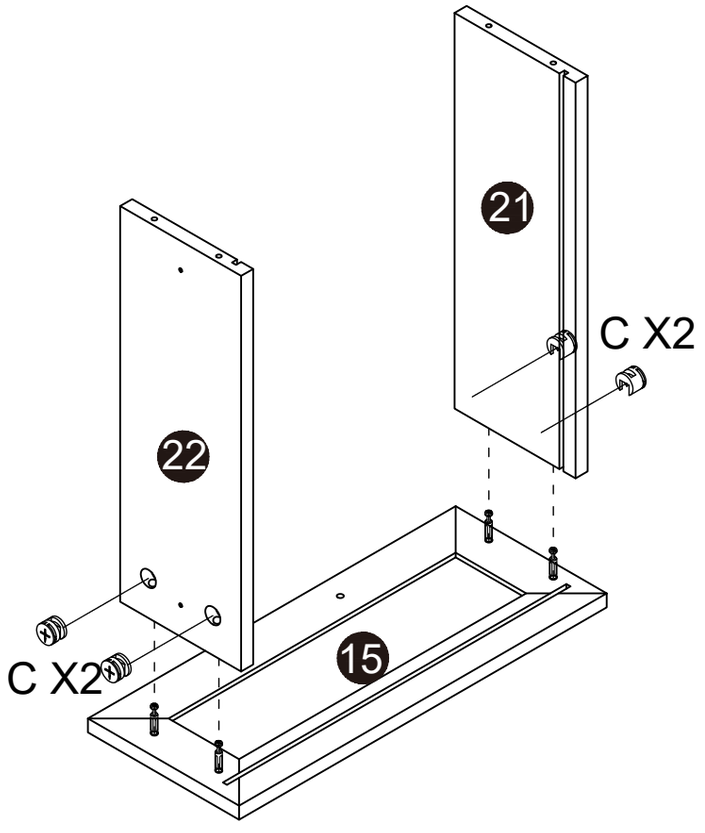

ASSEMBLY INSTRUCTION

STEP 44

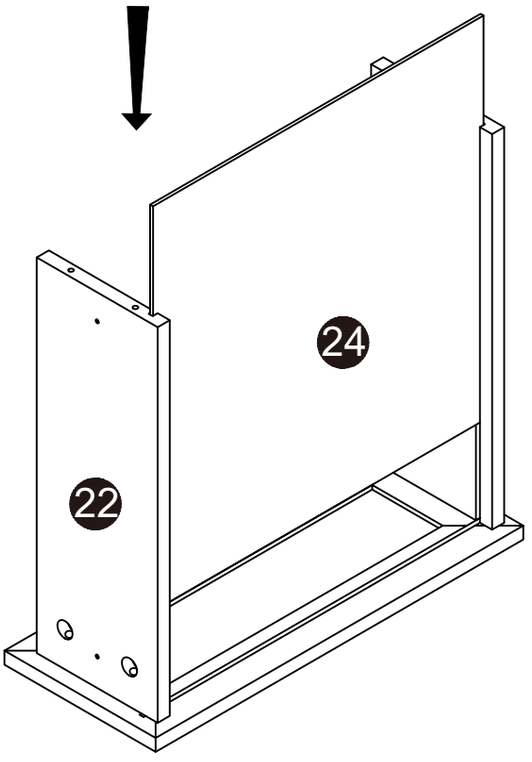

STEP 45

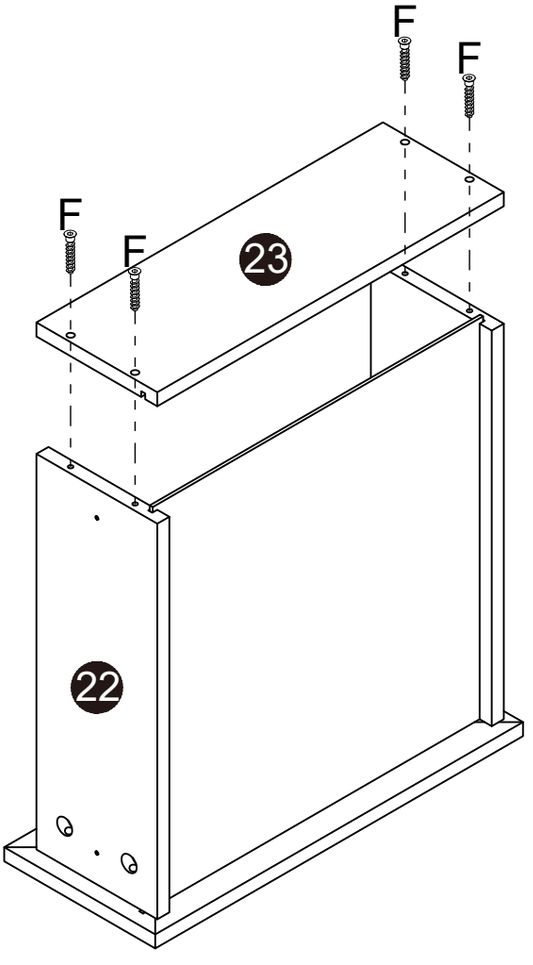

F X4



ST5*40

ASSEMBLY INSTRUCTION

STEP 46

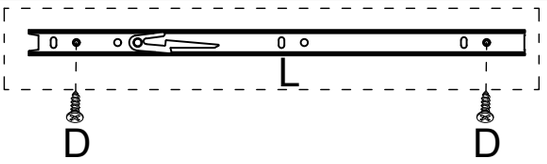

D X4

ST3.5*12

Please note that L and M should not be mixed up.

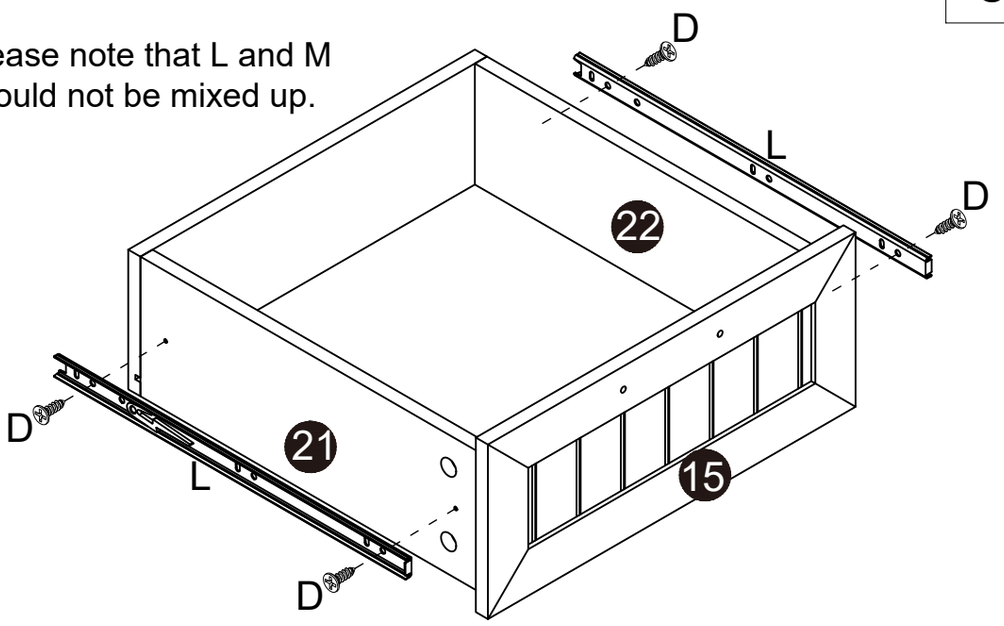

STEP 47

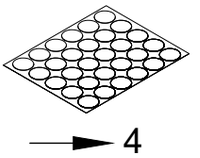

K X1

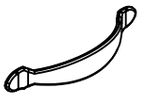

J X2



M4*14

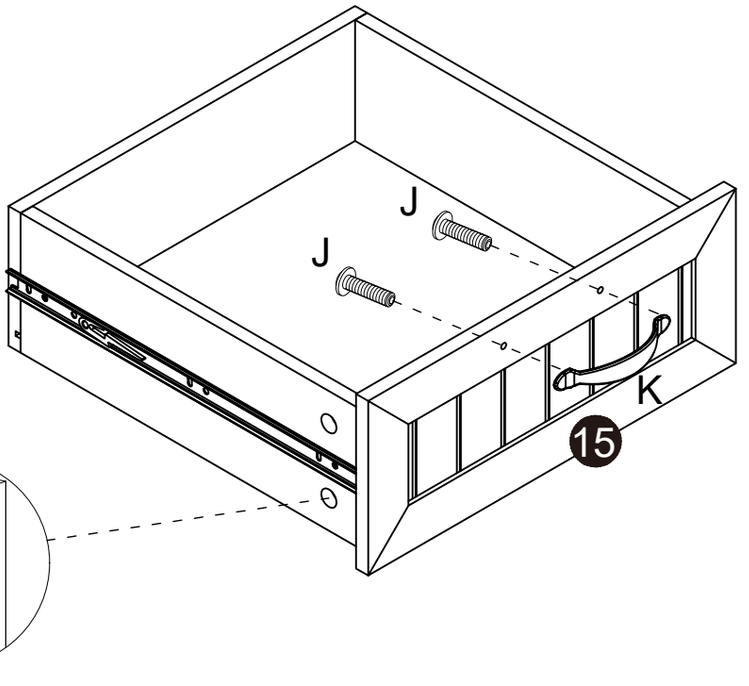

ASSEMBLY INSTRUCTION

STEP 48

B X4



ST6*40

STEP 49

C X4



Ø15*9.5

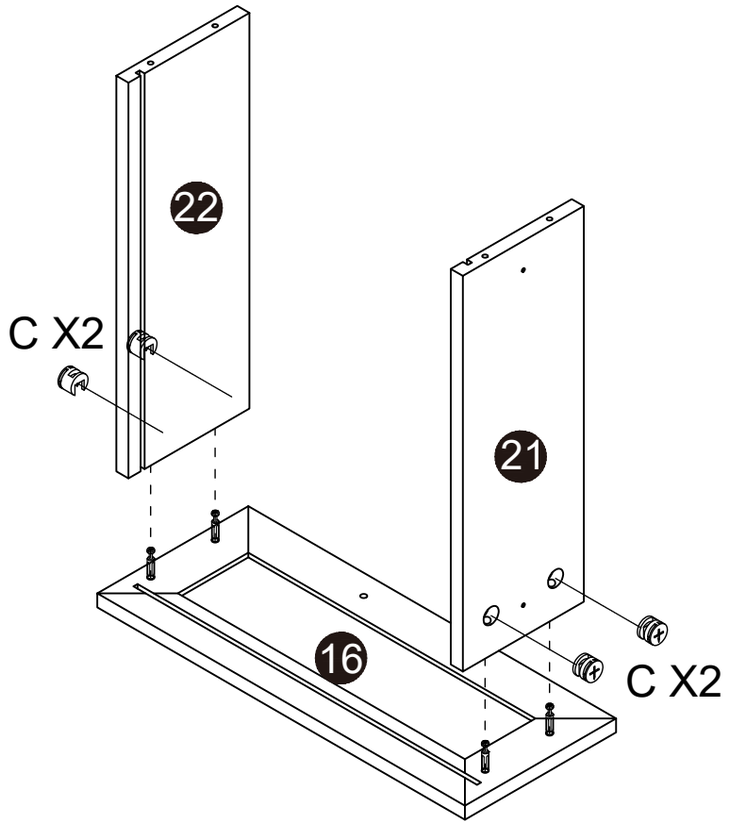

ASSEMBLY INSTRUCTION

STEP 50

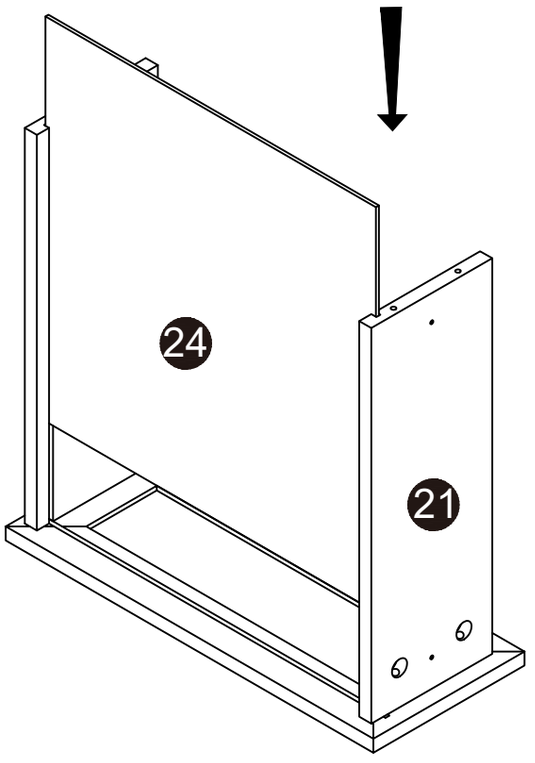

STEP 51

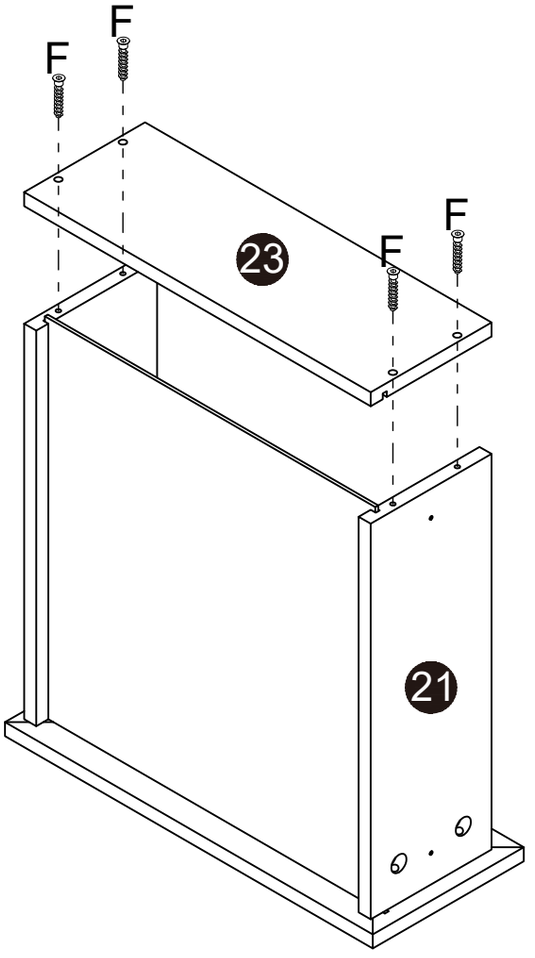

F X4



ST5*40

ASSEMBLY INSTRUCTION

STEP 52

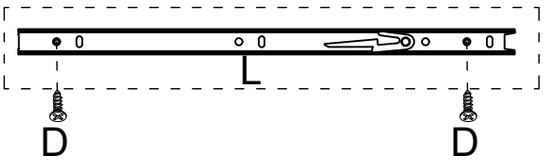

D X4

ST3.5*12

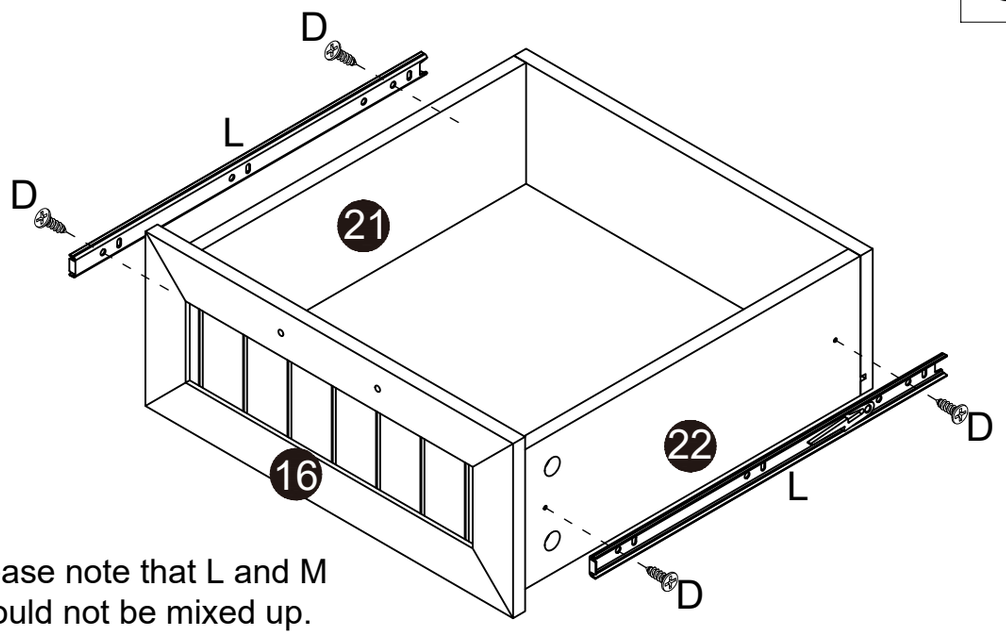

Please note that L and M should not be mixed up.

STEP 53

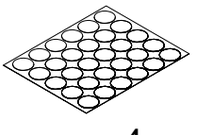

4

K X1

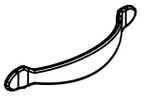

J X2



M4*14

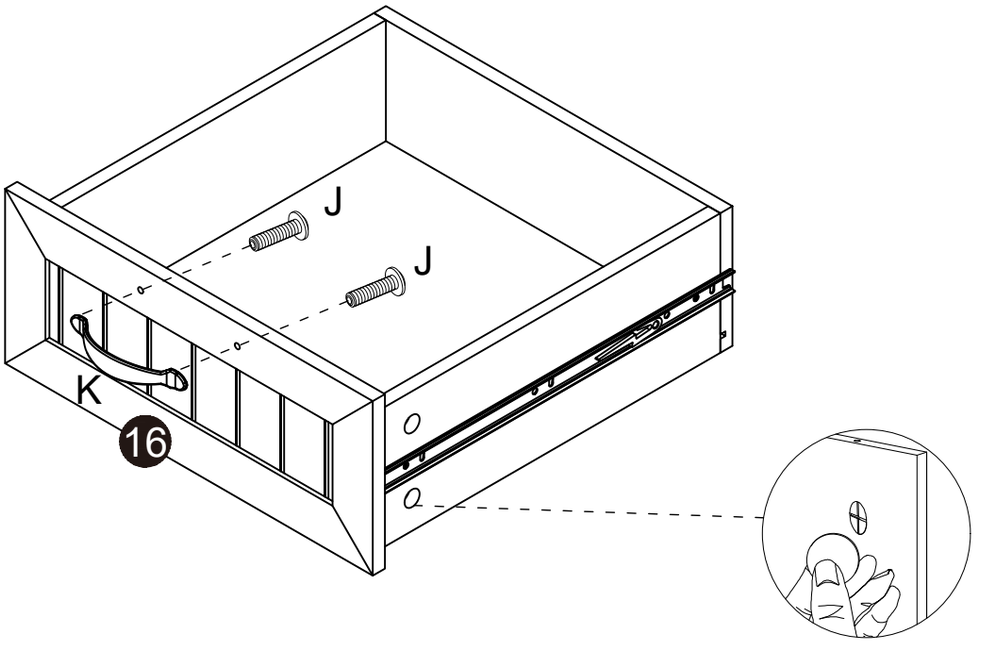

ASSEMBLY INSTRUCTION

STEP 54

B X18

ST6*40

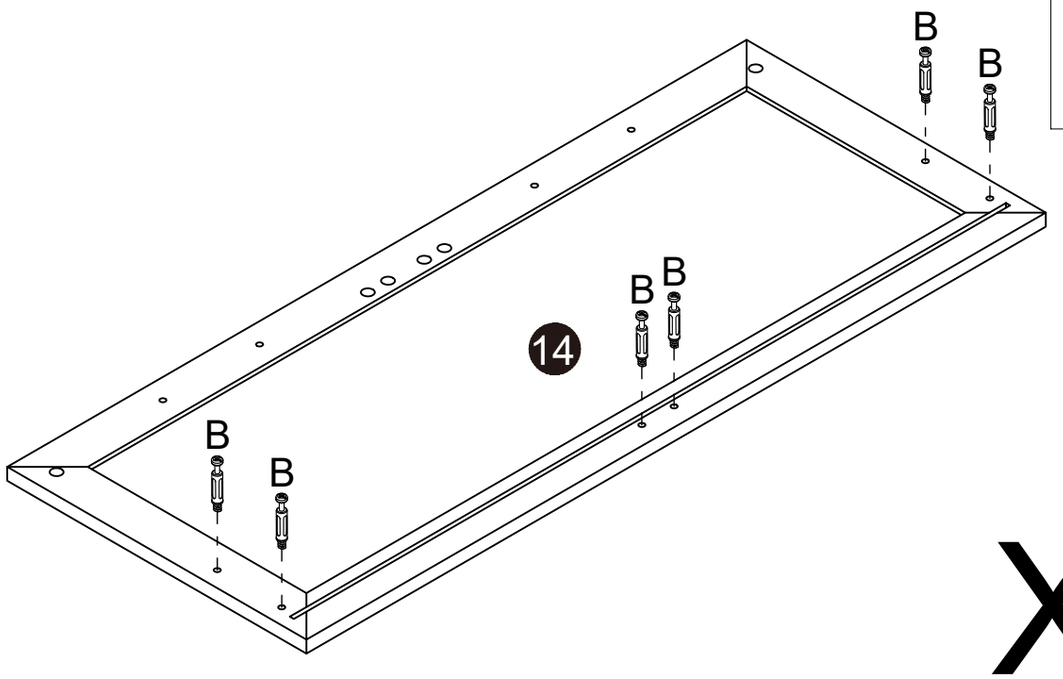

X3

STEP 55

C X12

Ø15*9.5

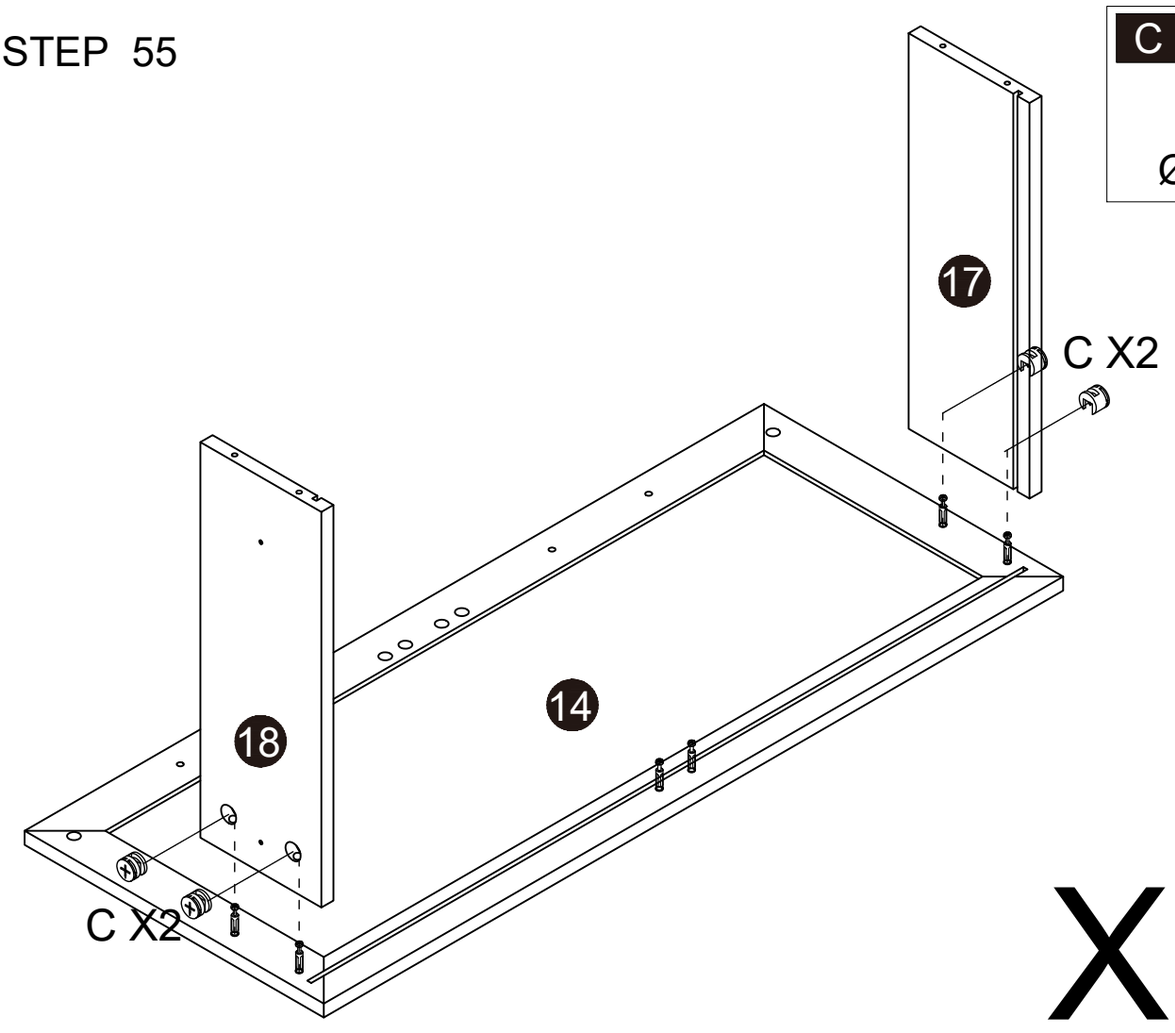

X3

ASSEMBLY INSTRUCTION

STEP 56

C X6

Ø15*9.5

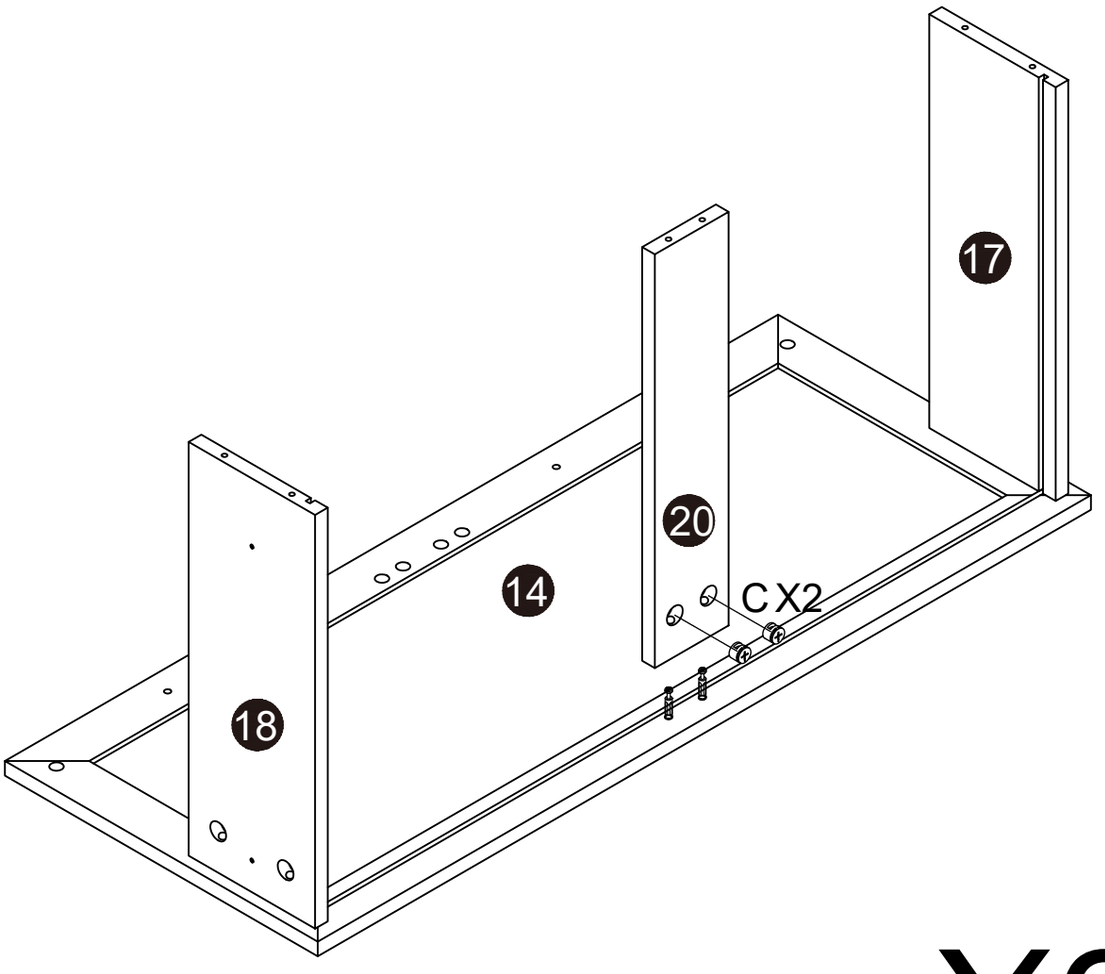

X3

ASSEMBLY INSTRUCTION

STEP 58

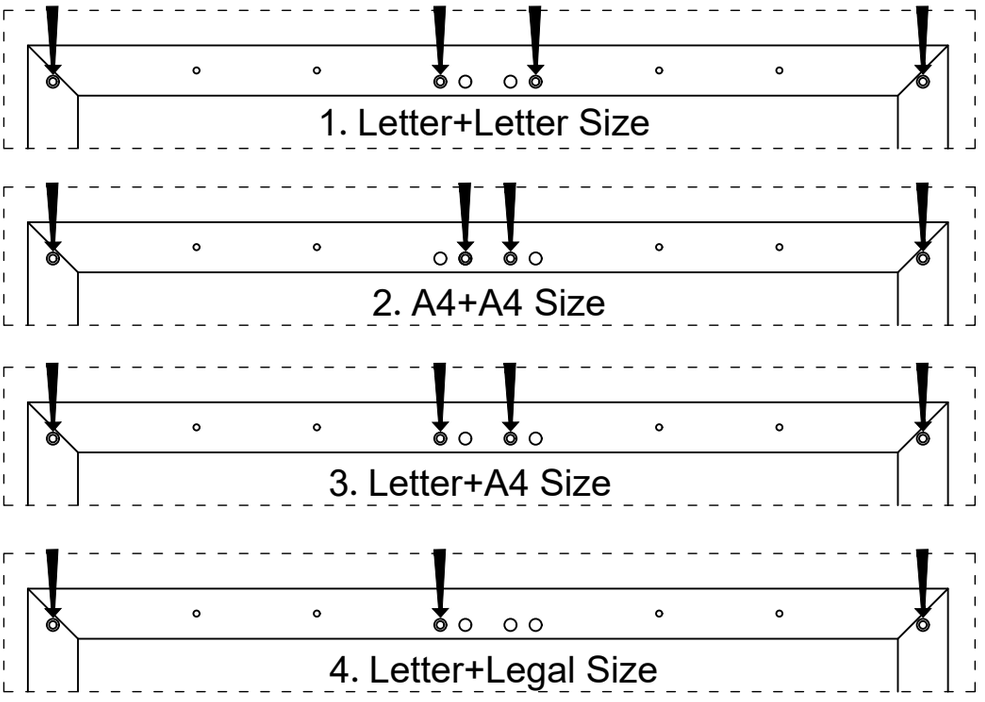

Assemble according to personal needs.

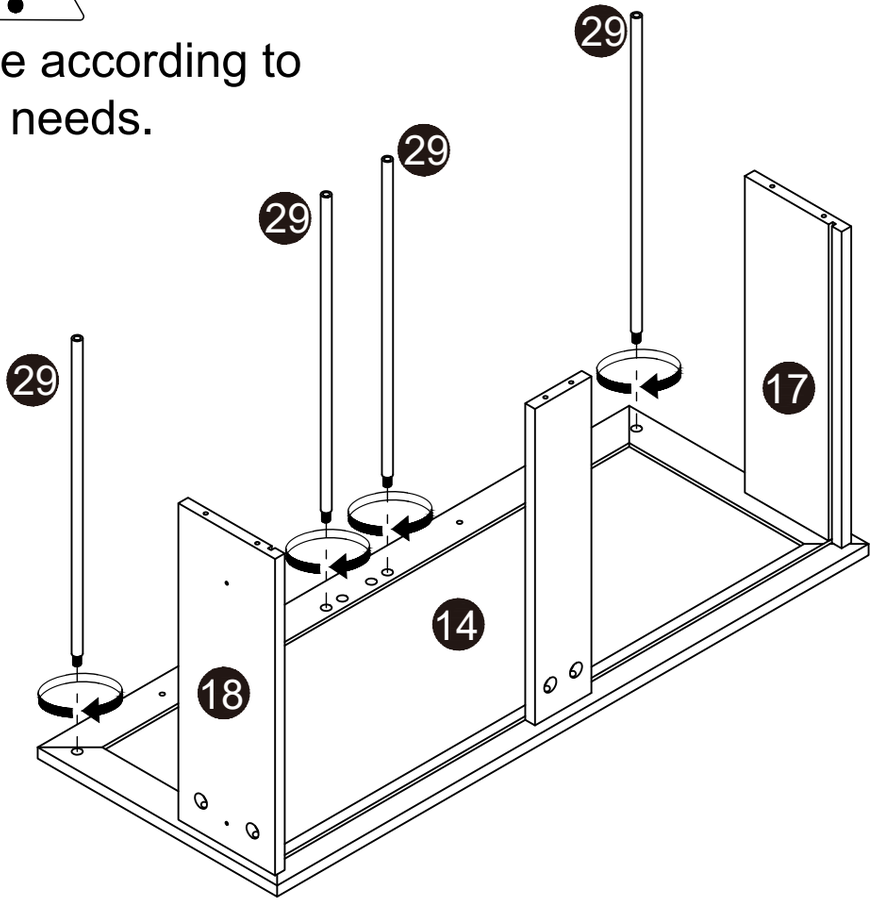

ASSEMBLY INSTRUCTION

STEP 59

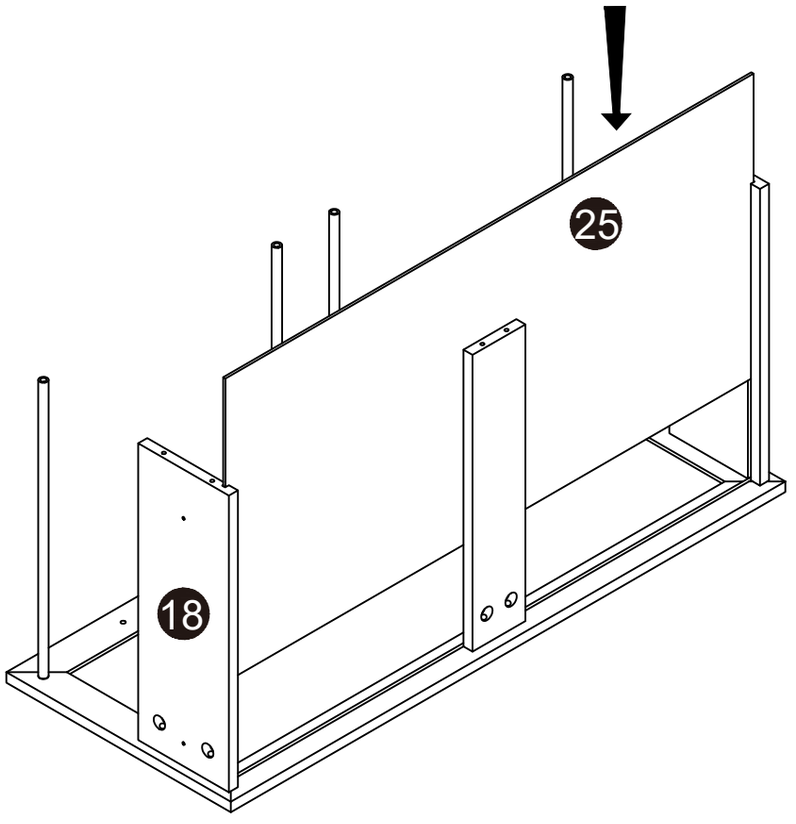

X3

STEP 60

F X18

ST5*40

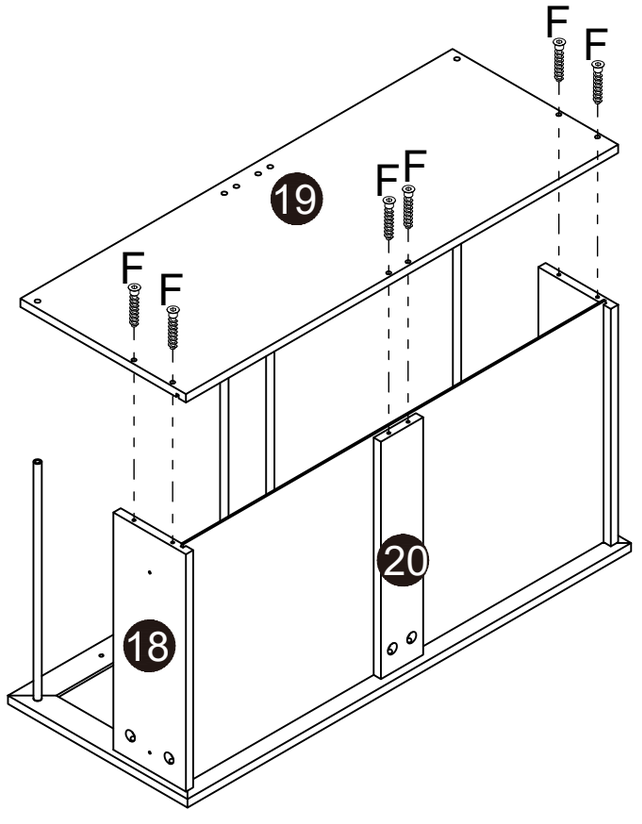

X3

ASSEMBLY INSTRUCTION

STEP 61

G X12



M6*20mm

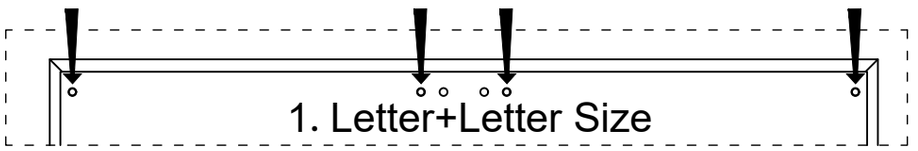

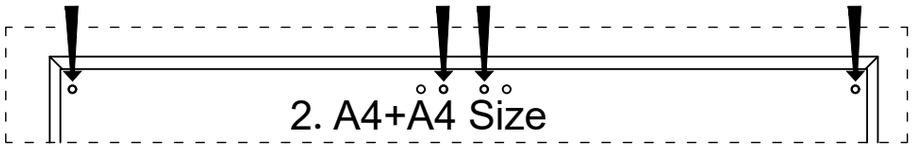

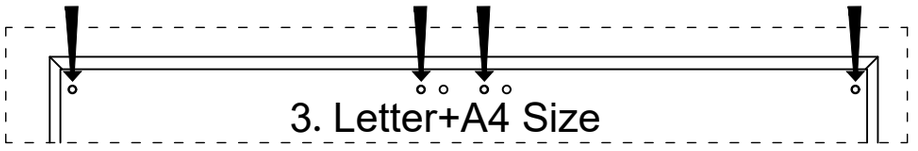

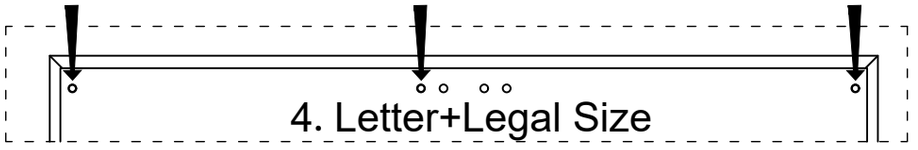



Fix the G screw rod according to the position 29.

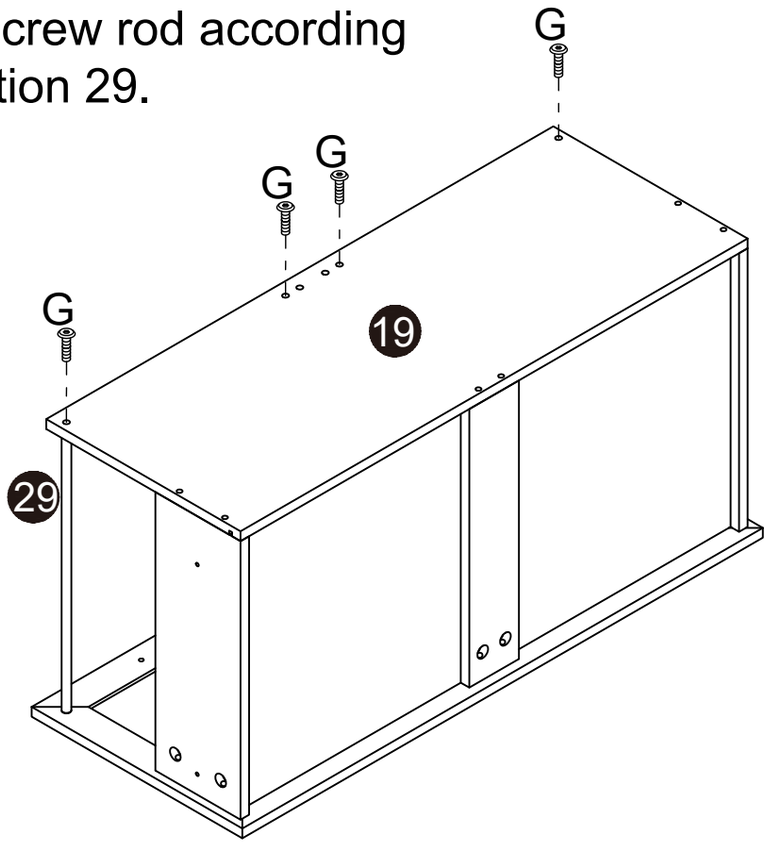

X3

ASSEMBLY INSTRUCTION

STEP 62

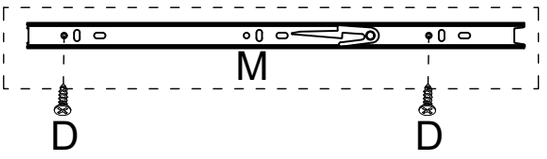

D X12

ST3.5*12

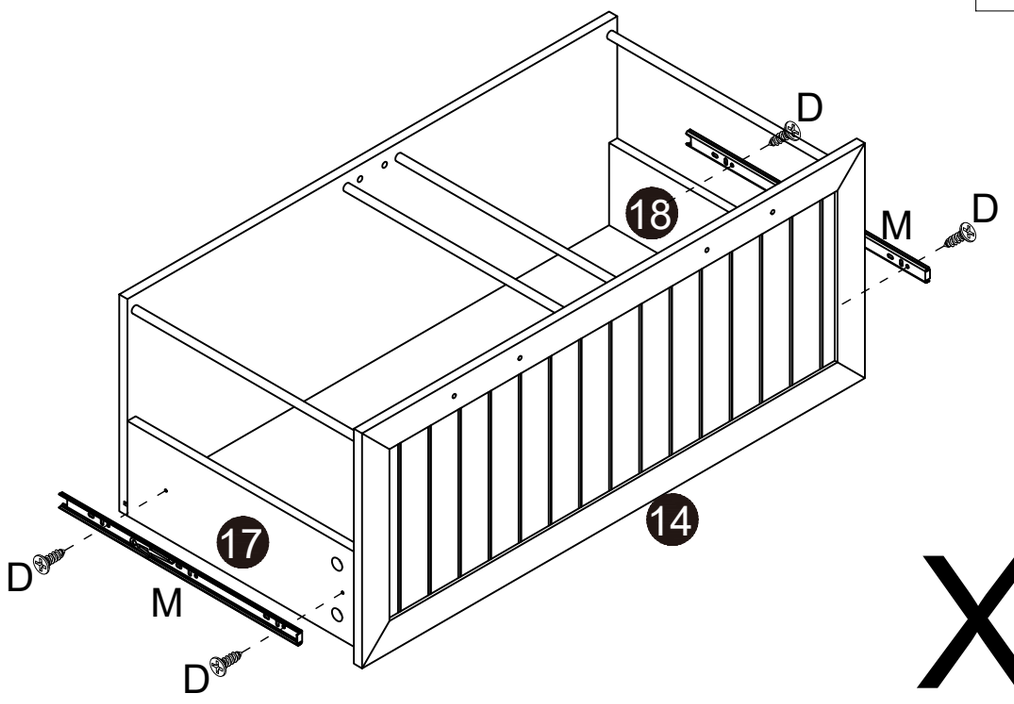

X3

STEP 63

K X6

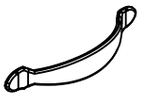

J X12

M4*14

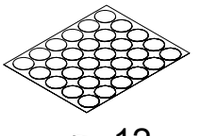

12

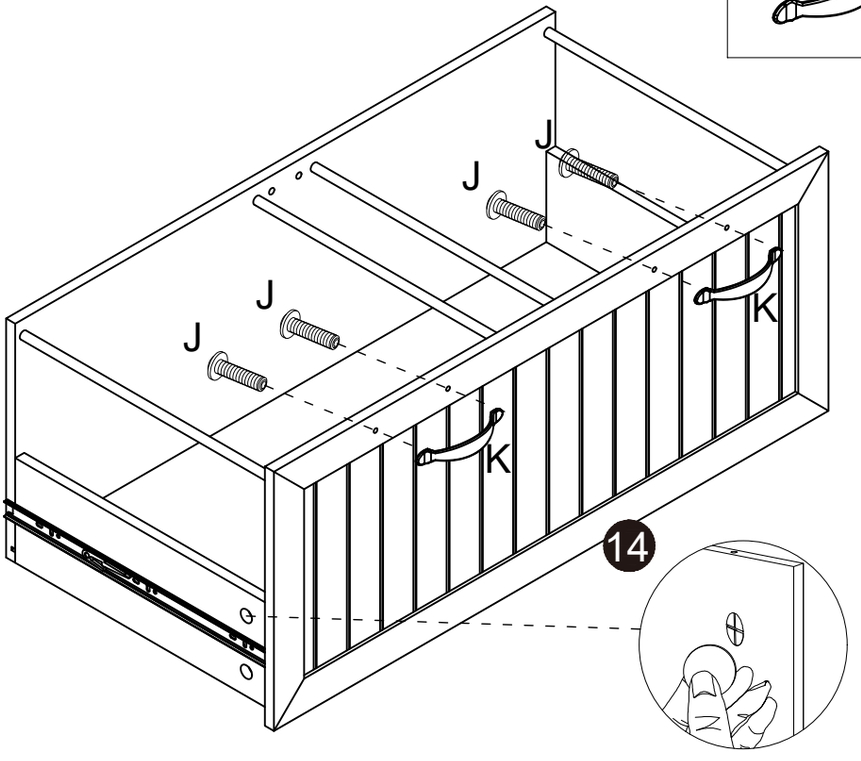

X3

ASSEMBLY INSTRUCTION

STEP 64

Move the movable iron piece with the small iron ball to the front and align the mounting rail.

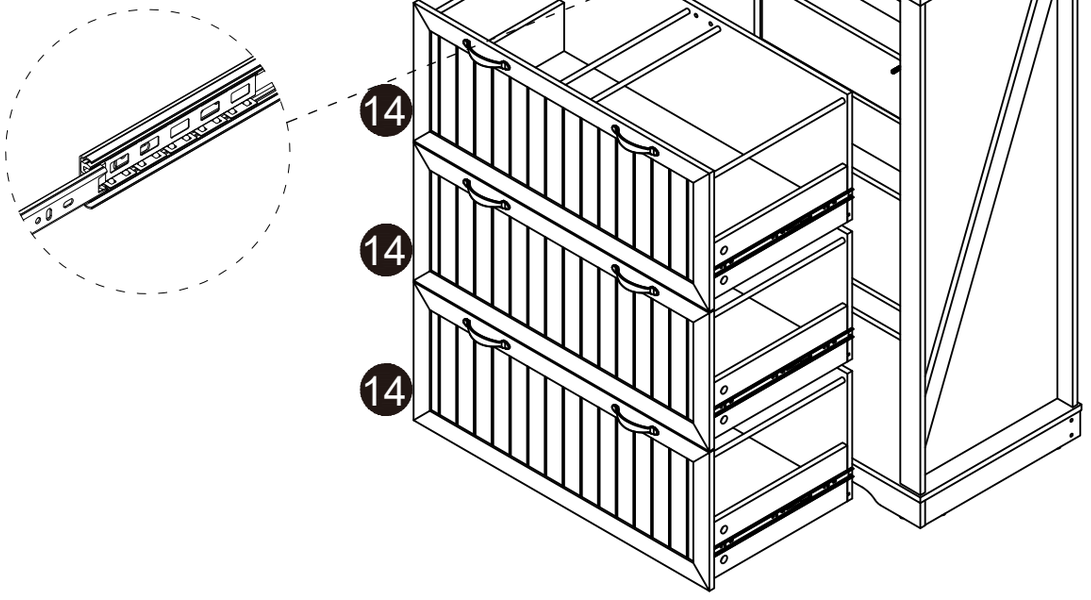

STEP 65

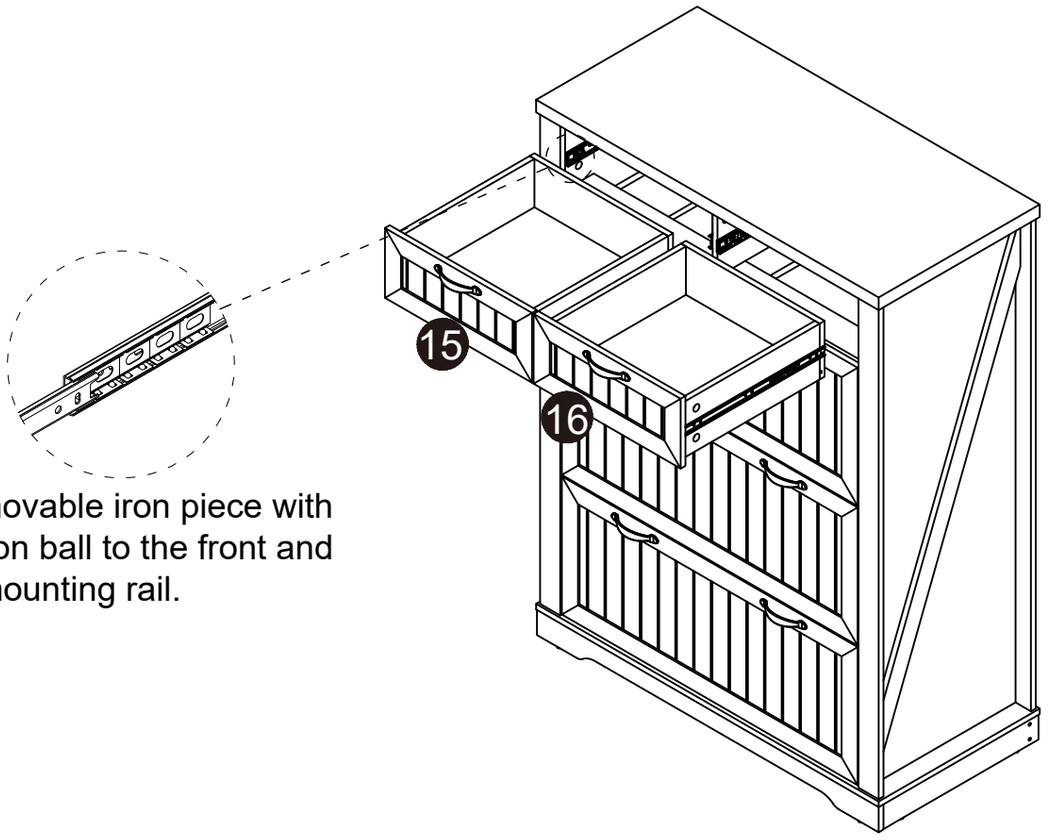

Move the movable iron piece with the small iron ball to the front and align the mounting rail.

Customer Service

Quick Response within 24 Hours

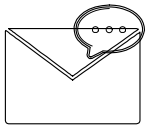

If you are still unable to resolve the issue you are experiencing, please contact us immediately via our support email.It doesn't matter if the product has been installed or not , our customer support team will respond within 24 hours and assist you quickly and efficiently.The most efficient way to confirn your problem to us is to attach a video,which illustrates your product issues.

Problems You May Encounter

PART	PROBLEM	SOLUTION
whole Product	Parts are missing, defective or having wrong parts in package.	You can contact us and we will get back to you within 24 hours
	Having issue(s) while reading the instruction or completing the assembly.	Feel free to contact us and we will get back to you within 24 hours.
	Encountering non-human caused damage during usage.	If the product is damaged due to non-human causes, please keep the product and send us photos of it. We will ascertain the cause of the product damage within 48 hours and provide you with a satisfactory solution.
Table Surface	Board Surface is broken, scratched or lack of somescrew holes.	Feel free to contact us and we will get back to you within 24 hours.
	The screw holes on the wooden board and other wooden boards are not aligned.	1.Please tighten the screws on the board by 70 ? , do not tighten completely. 2. Adjust the wooden board and board.Until the holes are arranged neatl y, then tighten all screws
	Desktop misalignment and unevenness	1.Please tighten the screws connecting the table board to the elevator by 70%, do not tighten them completely. 2.Adjust to a flat and aligned desktop, then tighten the screws. 3.If your problem still can't be solved, please feel free to contact us.
Metal acce--ssories	Metal accessories are damaged, rusted, bent, and broken.	Feel free to contact us and we will get back to you within 24 hours.
	The table is unstable after being assembled.	1.Check if the screws are tightened. 2.Read throughout the manual, check are there any parts installed incorrectly or missing assembled. 3.If your problem still can't be solved, please feel free to contact us.
	Encountering non-human caused damage during usage.	If the product is damaged due to non-human causes, please keep the product and send us photos of it. We will ascertain the cause of the product damage within 48 hours and provide you with a satisfactory solution.