W3871P577200

Installation instruction

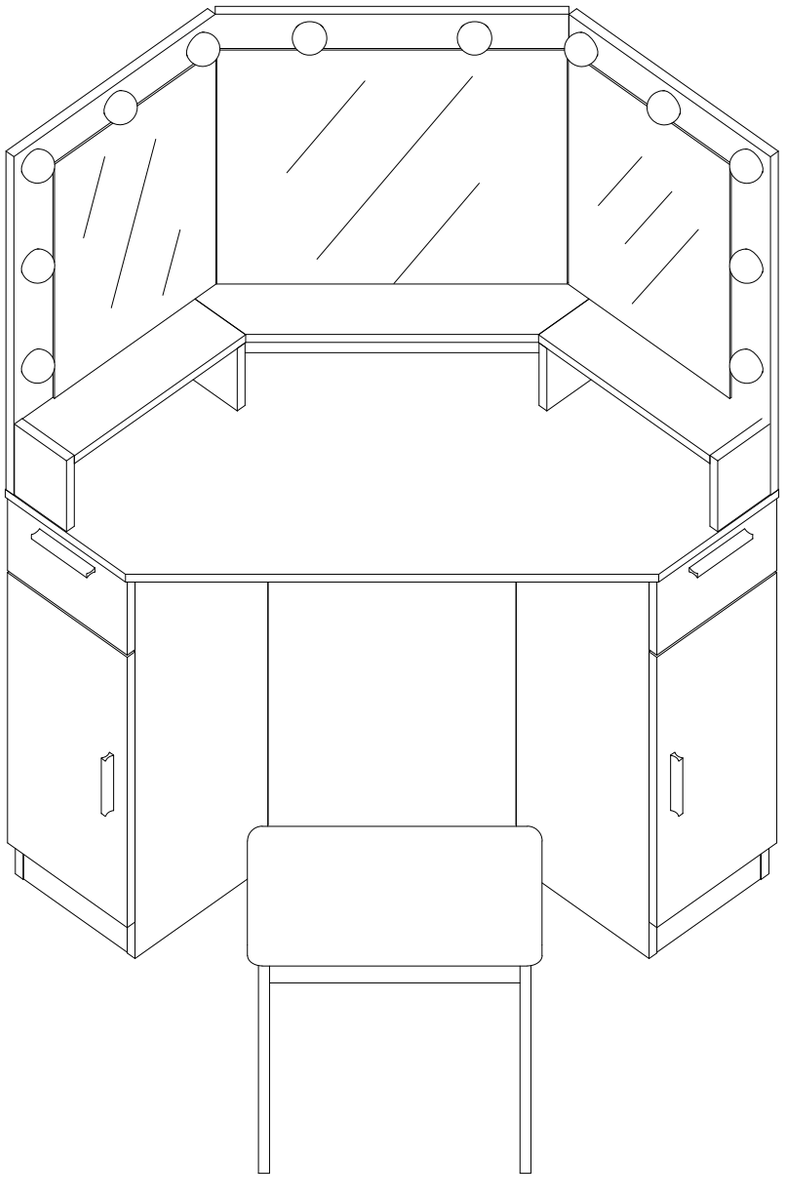

Important: High gloss panels are protected by the transparent film. Don’ t worry about scratches on the transparent protective film. After assembly completed, please remove transparent protective film from panel edges and clear protective film from panel surfaces.

2 PERSON ASSEMBLY



[EN]

Warning: Please read instructions fully before starting assembly.Check you have all the components and tools listed on pages.

Warning: Please place all parts on a flat surface.Place a soft blanket or similar underneath to protect against scratches or stains.Avoid dragging or sliding components across the floor.

Warning: Regularly check all fittings and fastenings to ensure they are secure and to prevent accidents.If any parts are missing, broken, damaged, or worn, discontinue use of the product until repairs have been made using
factory authorized parts.

Warning: Do not allow children to climb on the furniture as this may result in tipping and serious personal injury.Assemble the furniture away from the reach of children.

Warning: Do not place furniture close to fire sources or high-temperature objects to avoid the risk of fire **Warning**:

Clean furniture with a damp cloth or alcohol, avoid using cleaning agents containing corrosive
chemicals.

Warning: This product is equipped with an anti-tilt device. Please be sure to install this device to prevent unnecessary injuries caused by tipping.

Parts List

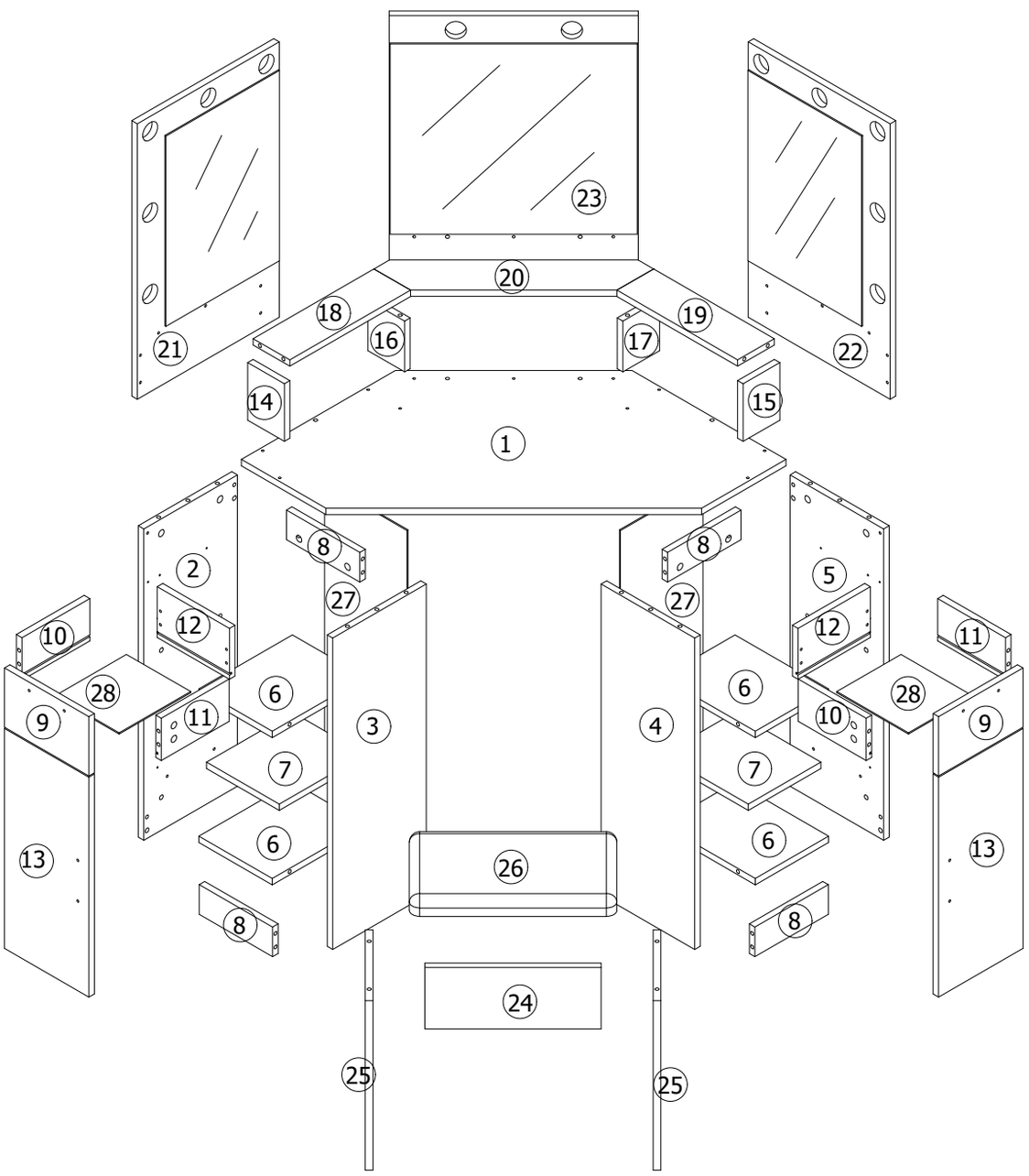
23
20
18
19
16
17
21
22
14
15
1
8
8
2
27
27
5
12
12
10
11
28
6
6
28
9
11
3
4
10
9
7
7
6
6
13
26
13
8
8
24
25
25

A 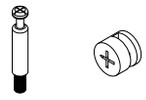	B 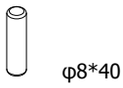 φ8*40	C 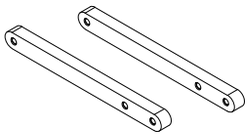
50 pcs	22 pcs	2 pcs
D  5*40	E 	F 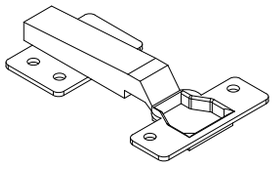
38 pcs	12 pcs	4 pcs
G 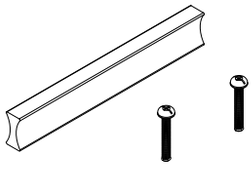	H  3.5*14	I 
4 pcs	40 pcs	20 pcs
J  3.5*22	K  φ20	L 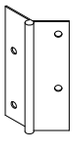
12 pcs	77 pcs	2 pcs
M 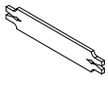	N 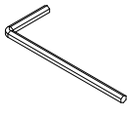 M3	O 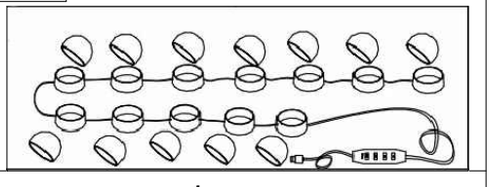
1 pc	1 pc	1 pc

1

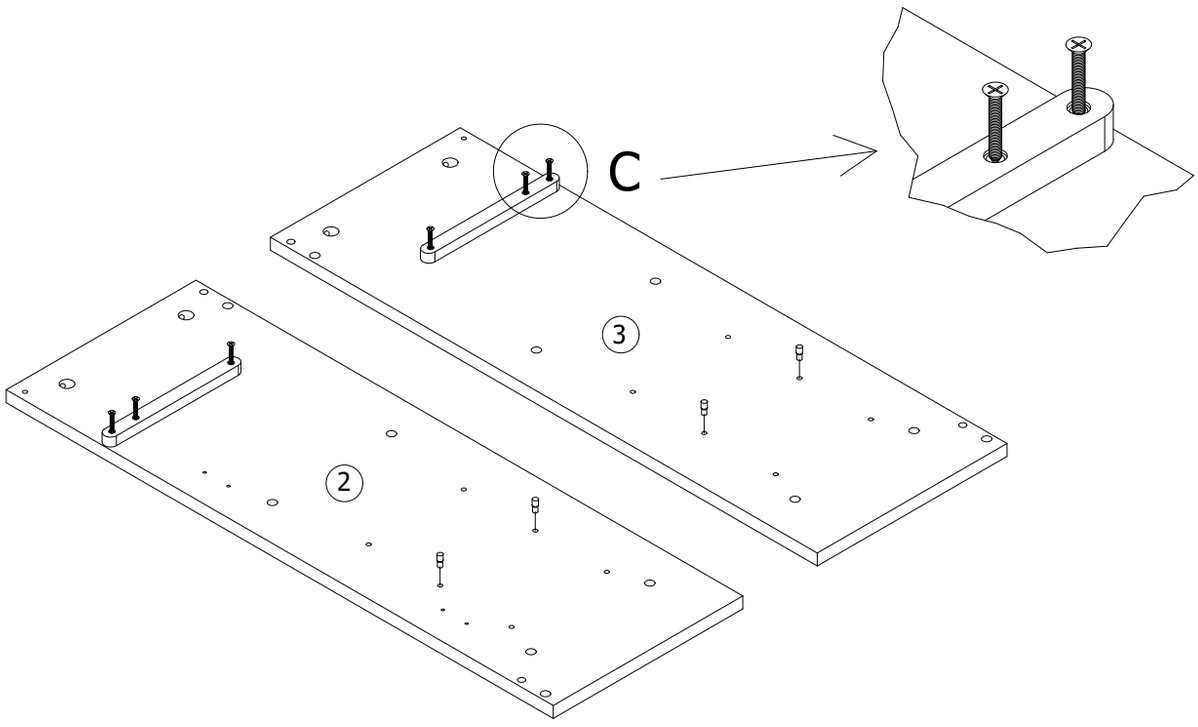

C*1 E*4 J*6

2

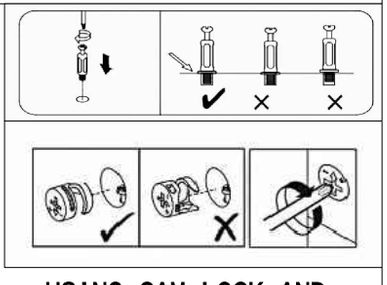

USING CAM LOCK AND QUICKFIT

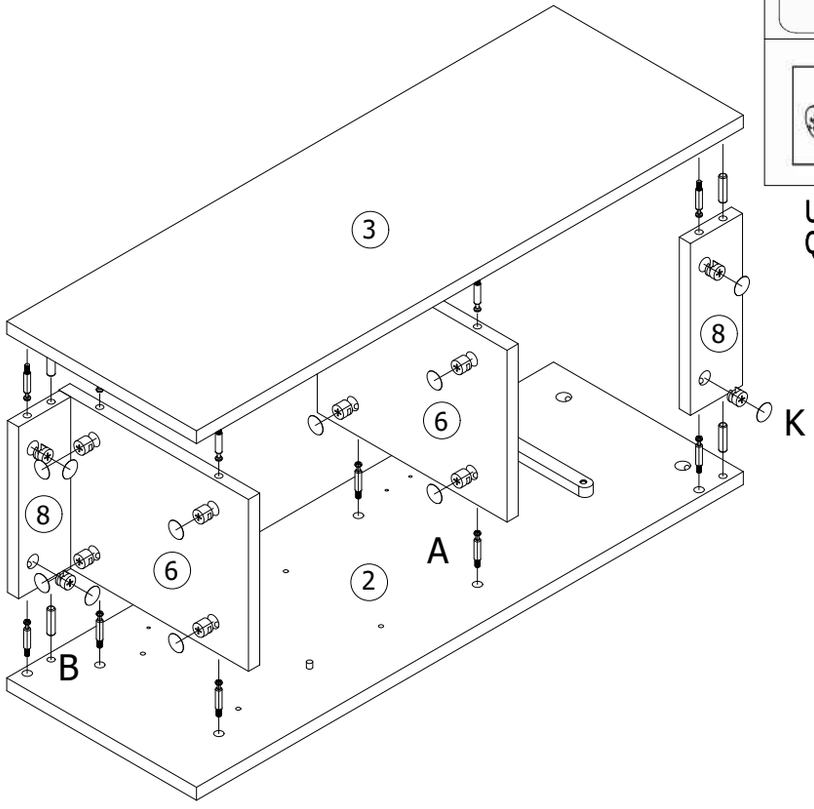

A*12 B*4 K*12

3

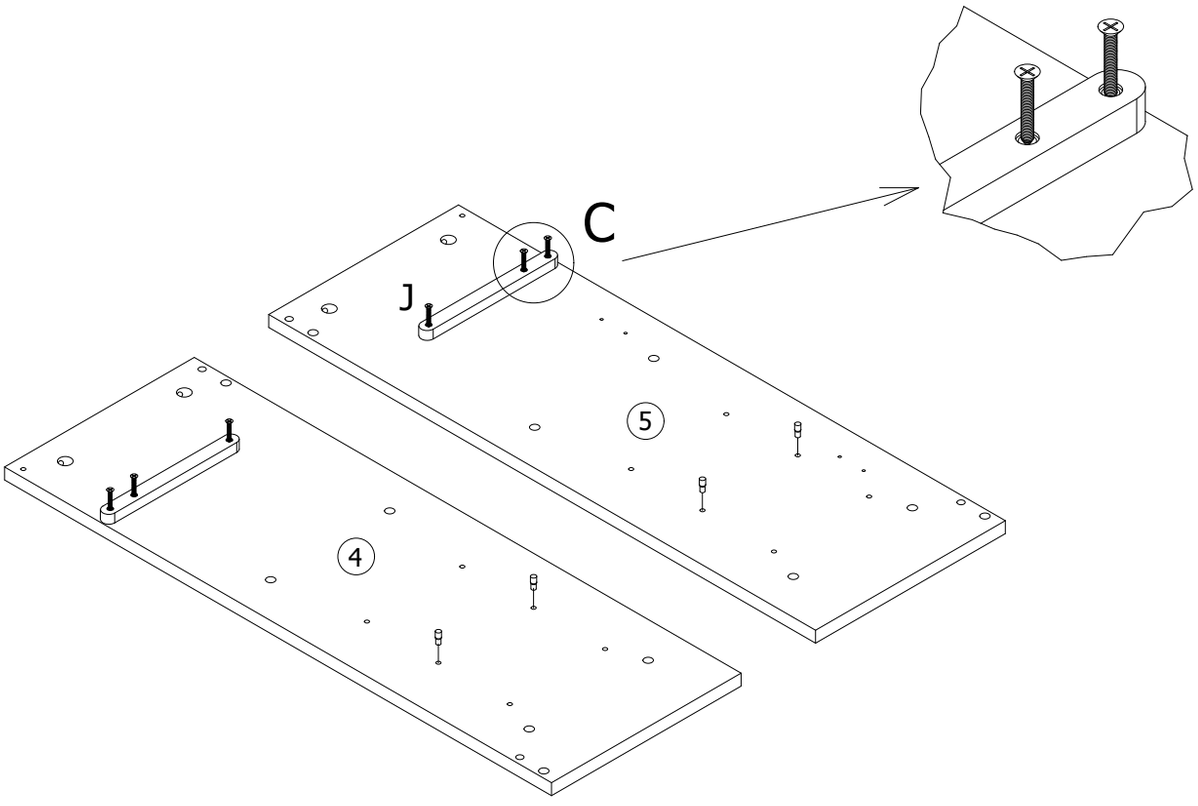

C*1 E*4 J*6

4

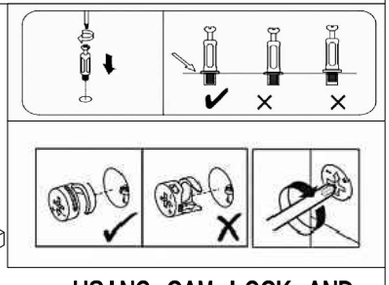

USING CAM LOCK AND QUICKFIT

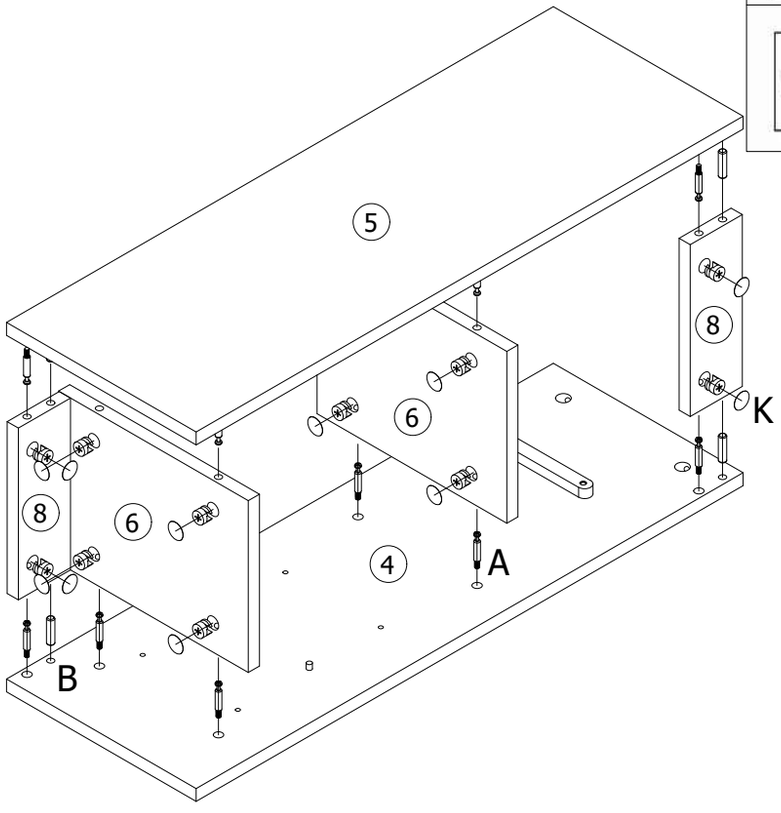

A*12 B*4 K*12

5

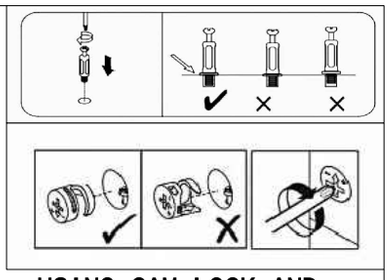

USING CAM LOCK AND QUICKFIT

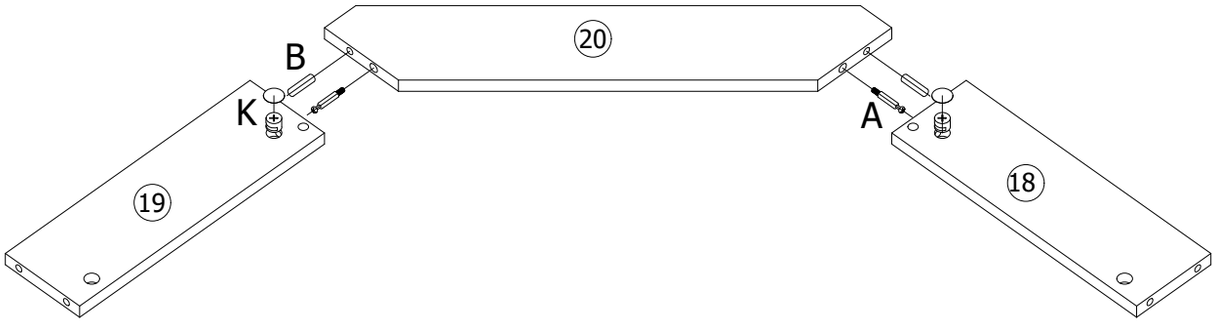

A*2 B*2 K*2

6

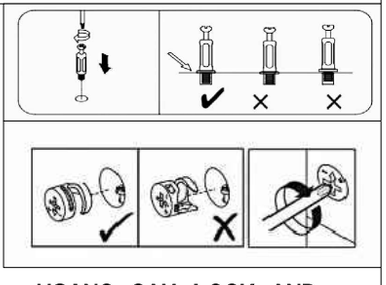

USING CAM LOCK AND QUICKFIT

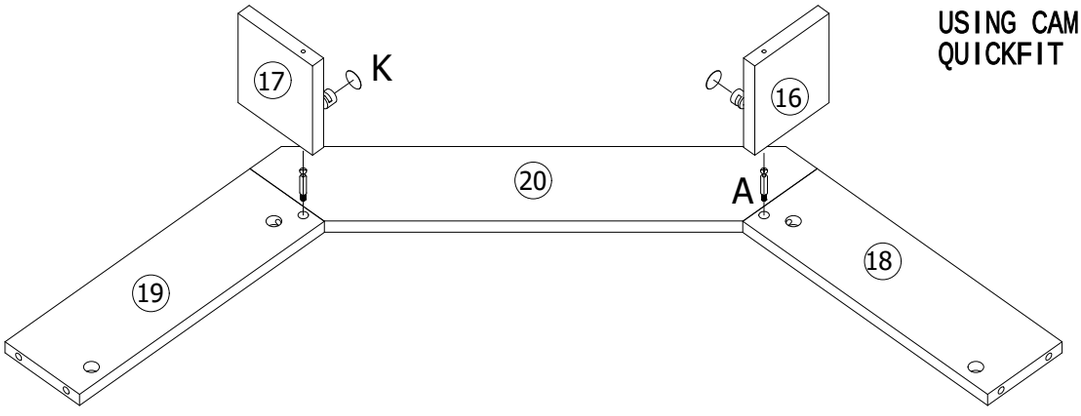

A*2 K*2

7

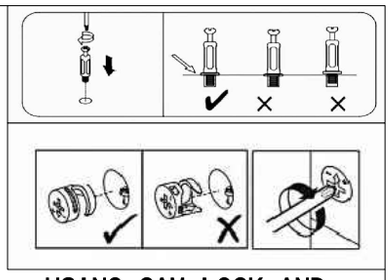

USING CAM LOCK AND QUICKFIT

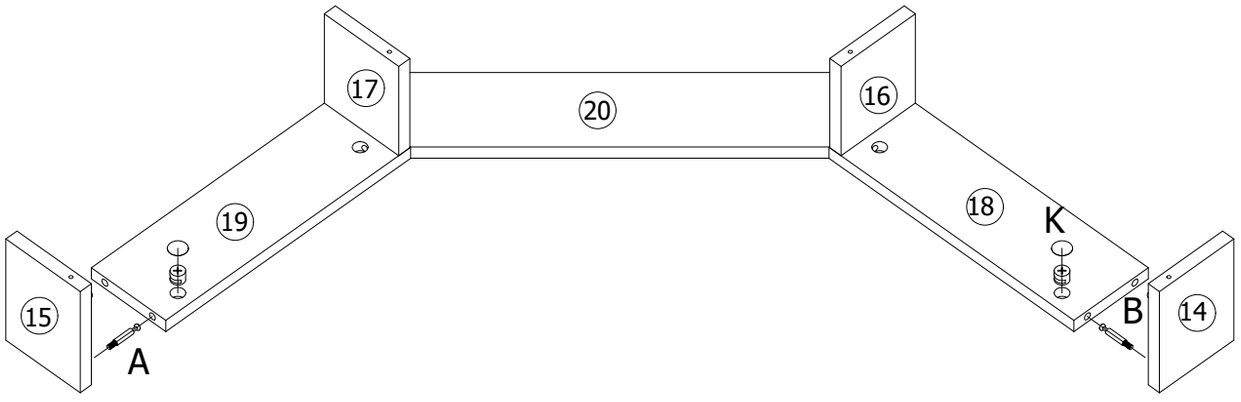

A*2 B*2 K*2

8

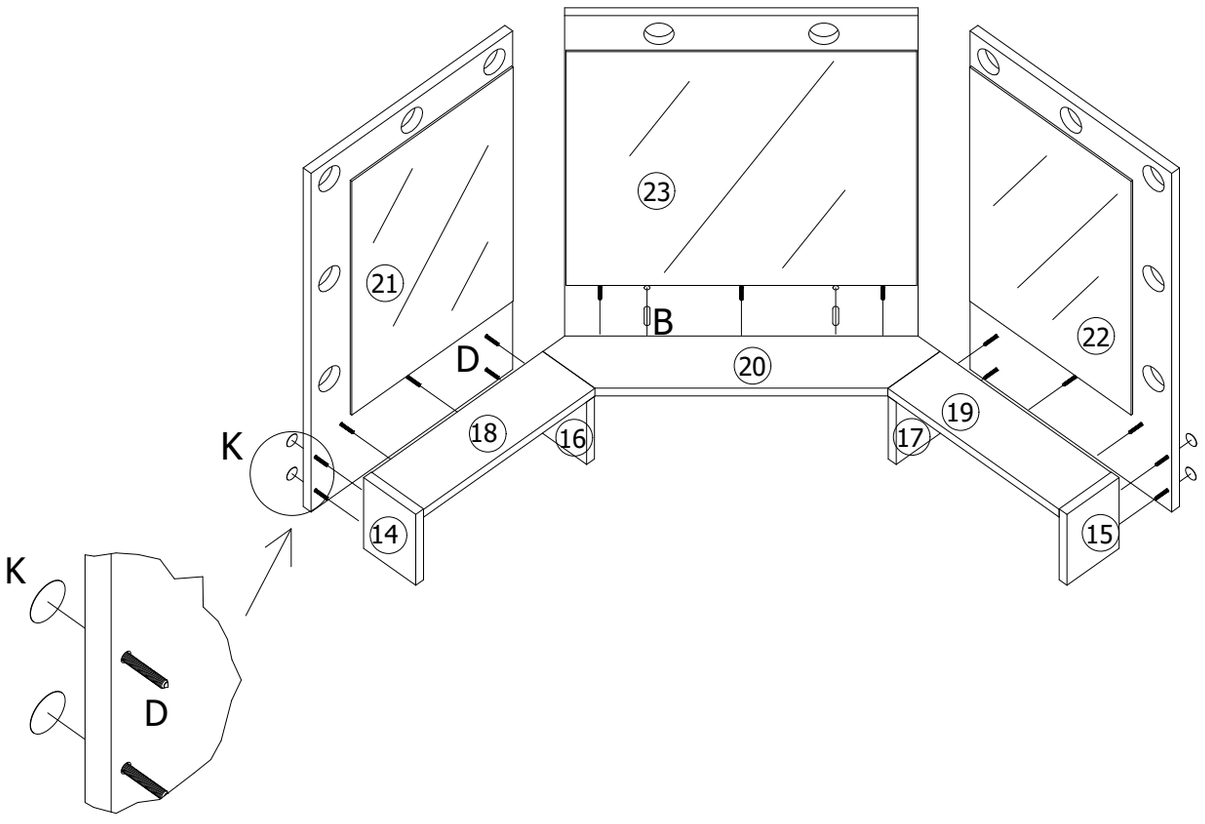

B*2 D*15 K*15

9

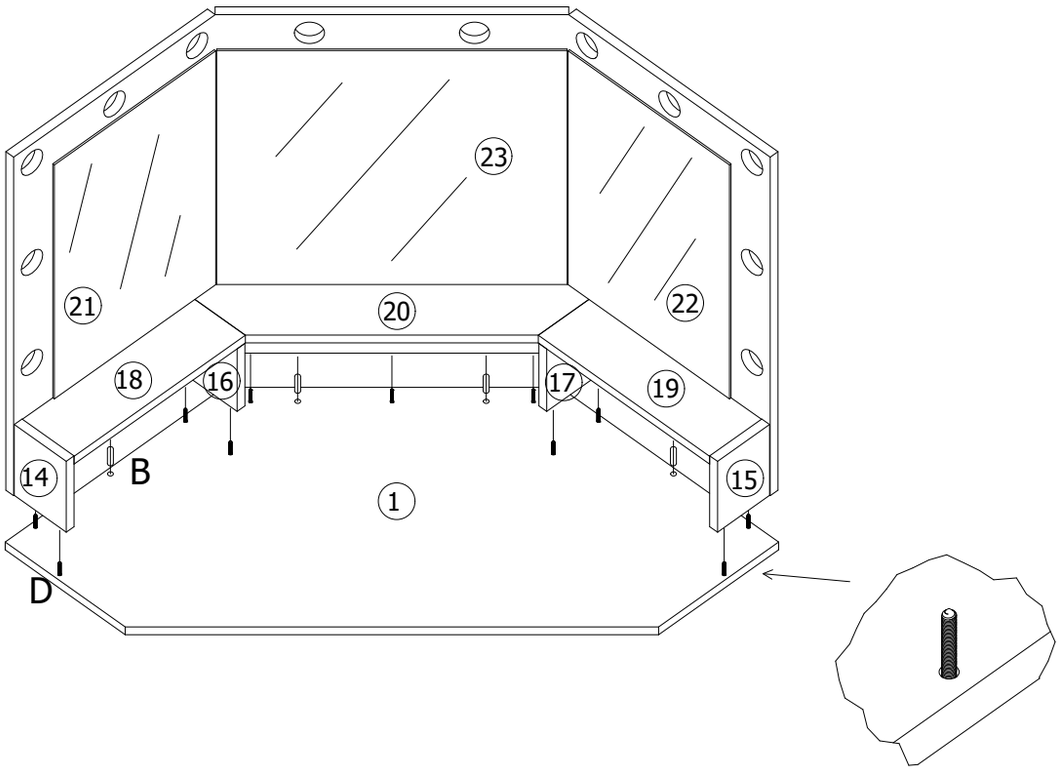

B*4 D*11

10

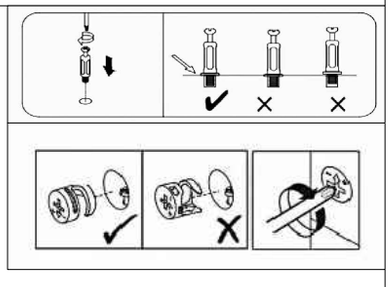

USING CAM LOCK AND QUICKFIT

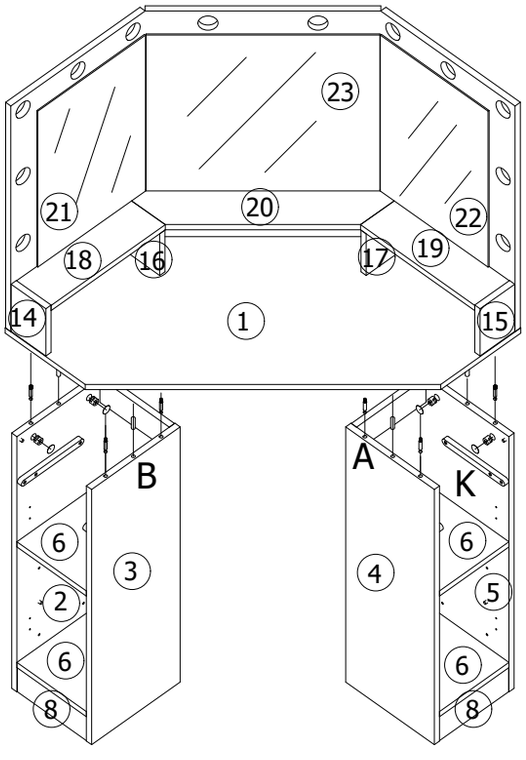

A*8 B*4 K*8

11

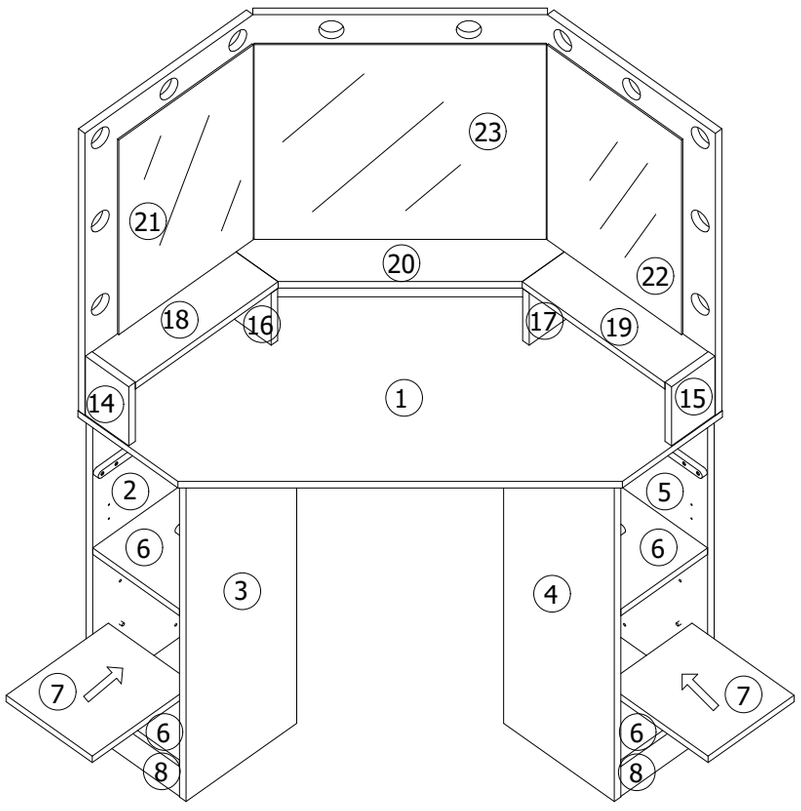

12

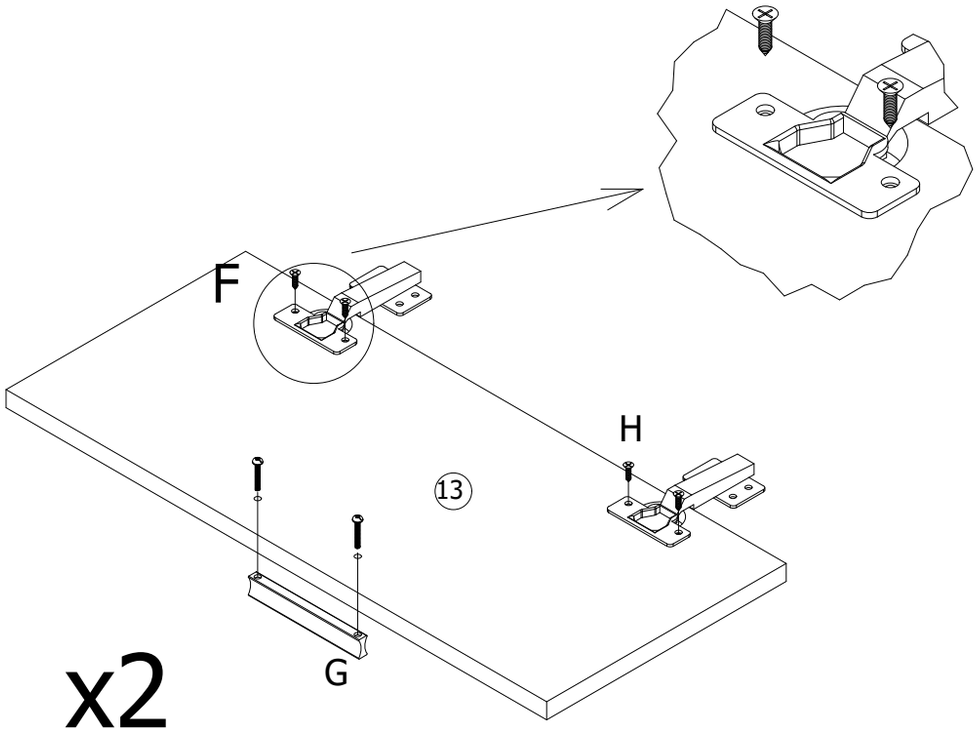

x2

F*4 G*2 H*8

13

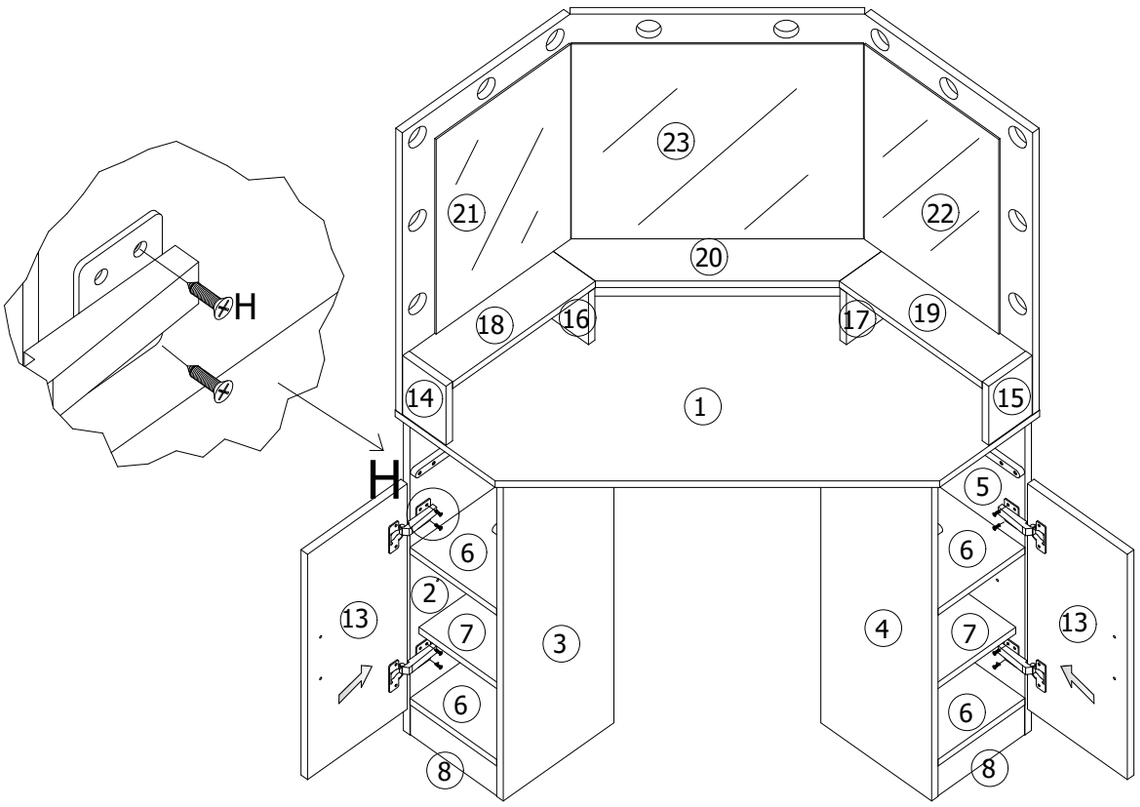

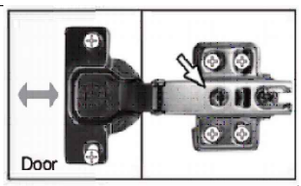

Lateral Adjustment

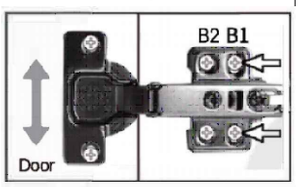

Vertical Adjustment

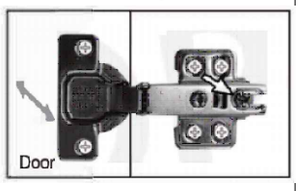

Front-to-Back Adjustment

H*16

14

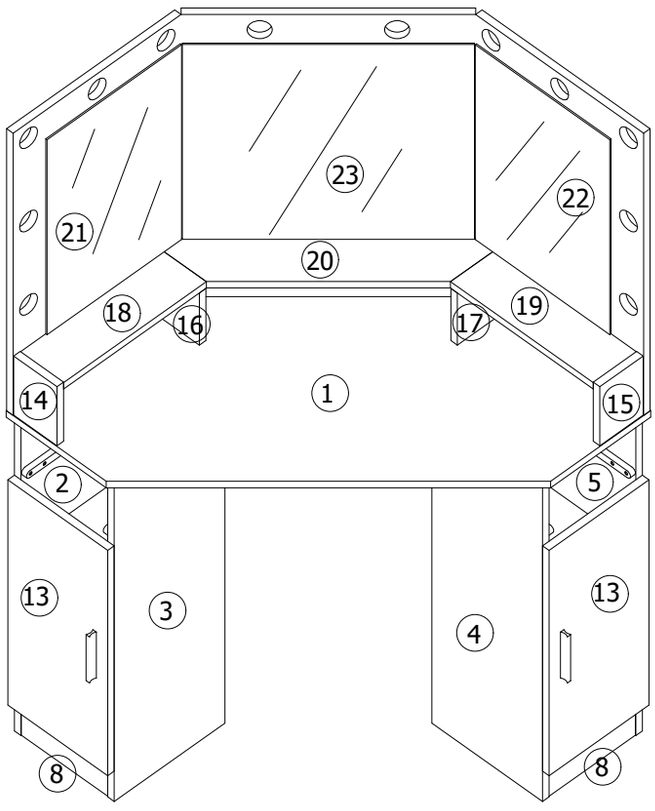

15

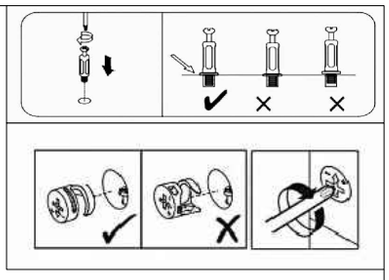

USING CAM LOCK AND QUICKFIT

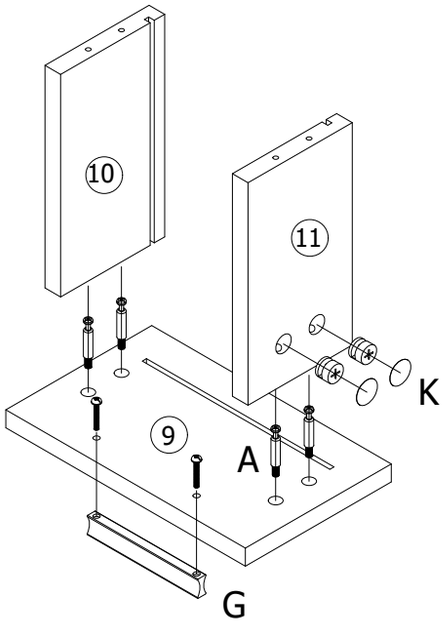

x2

A*8 G*2 K*8

16

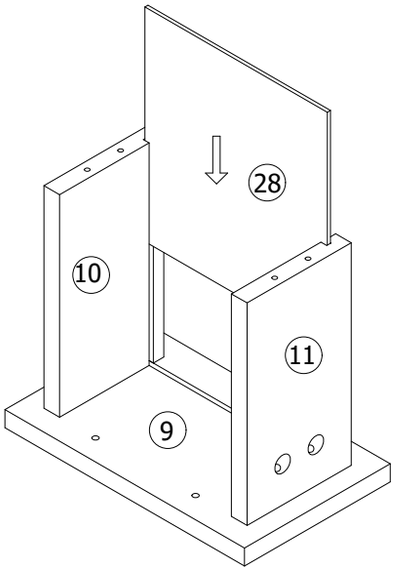

x2

17

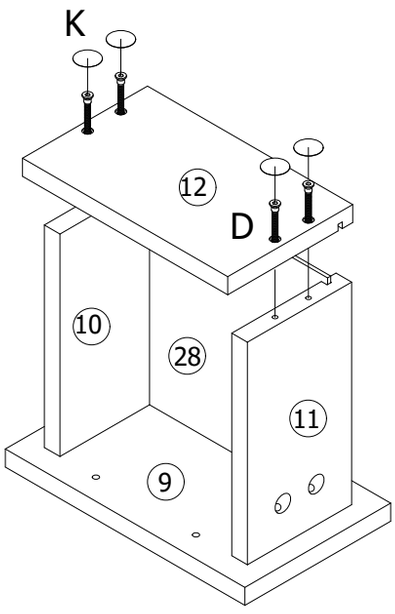

x2

D*8 K*8

18

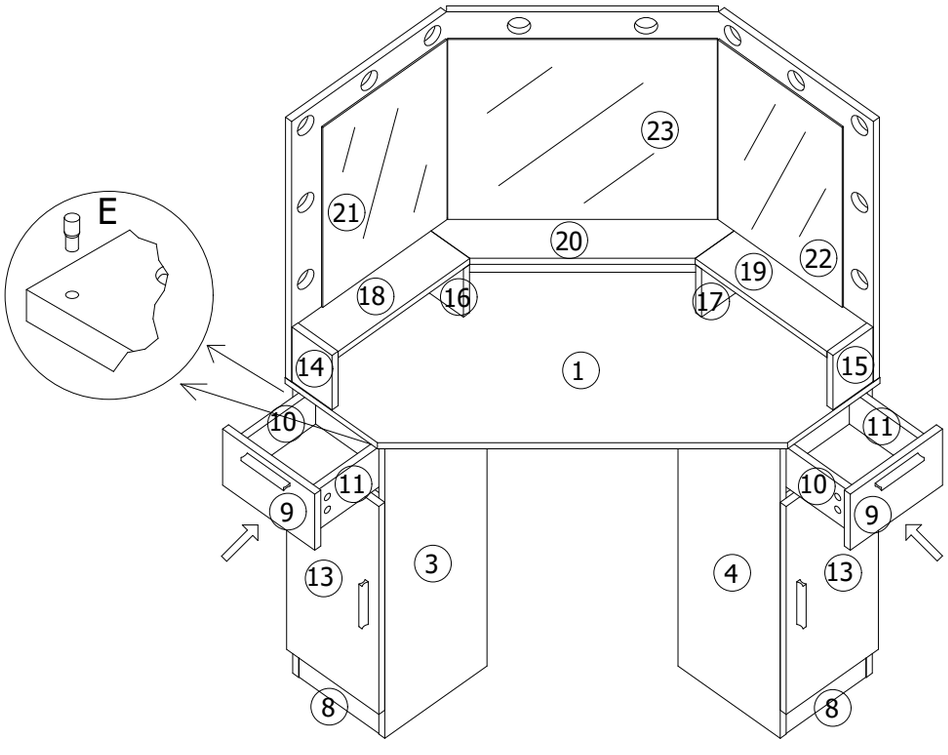

E*4

19

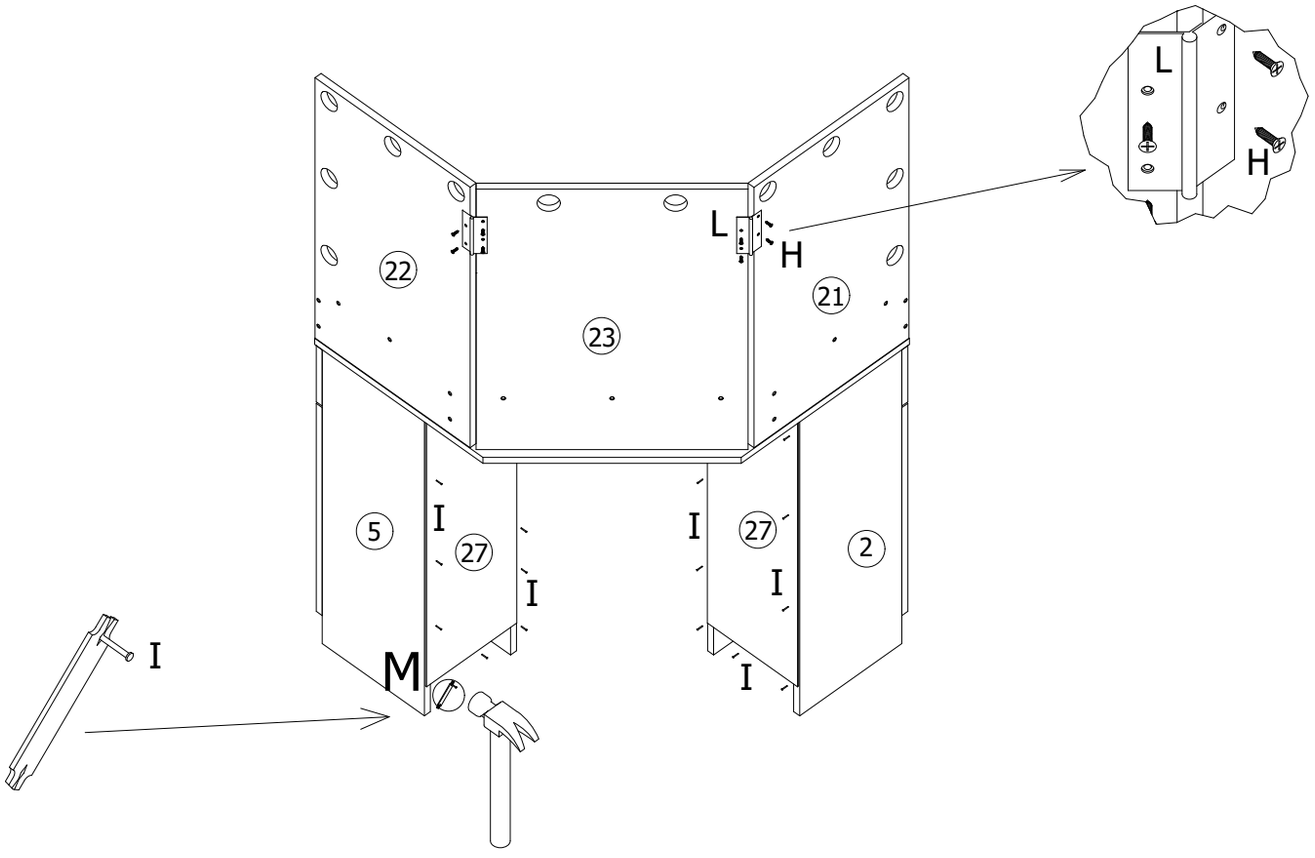

H*8 I*20 L*2 M*1

20

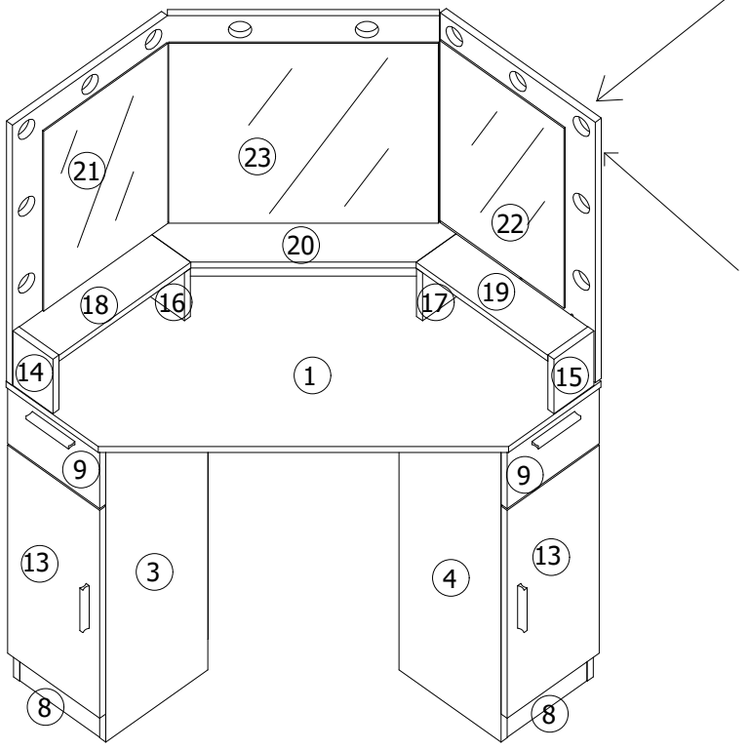

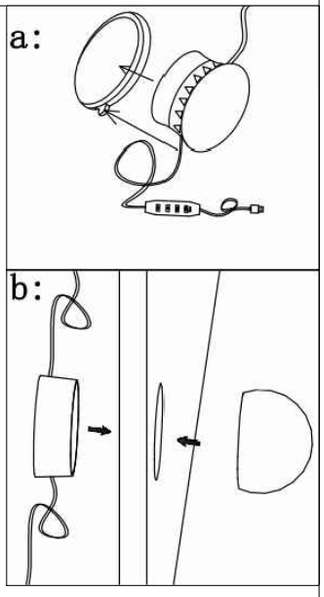

Please adjust the light wire to a suitable distance before installation

O*1

21

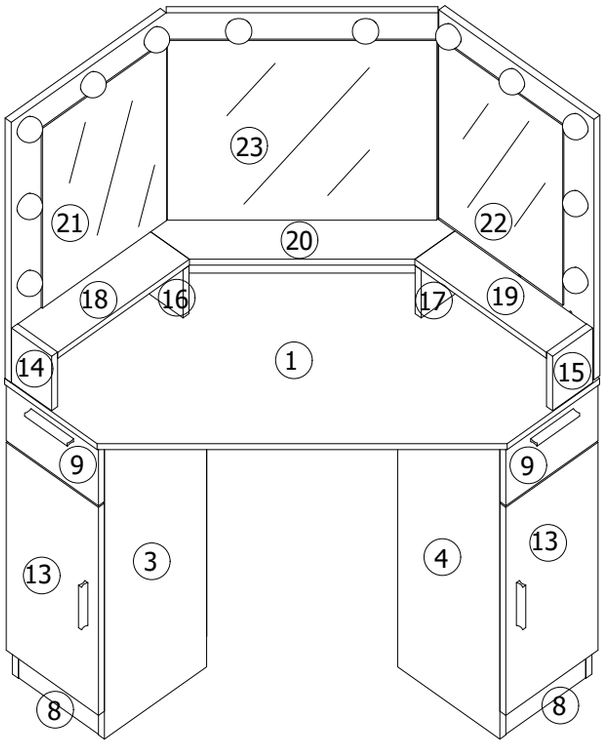

22

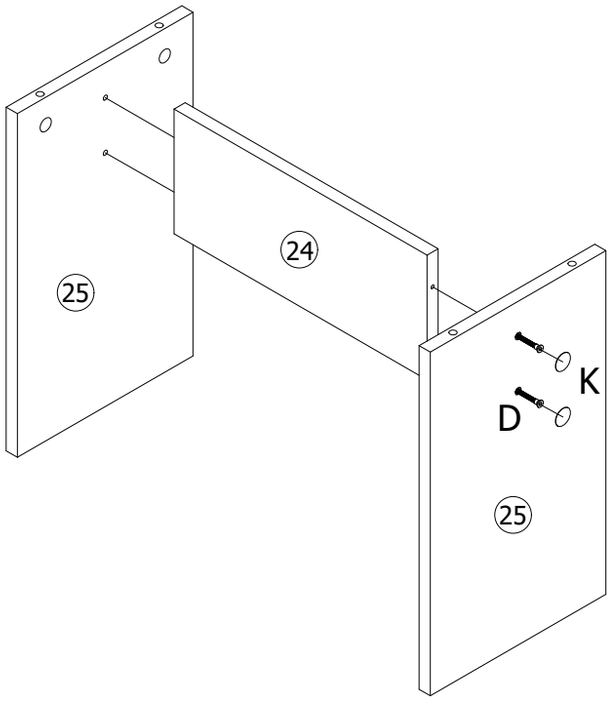

D*4 K*4

23

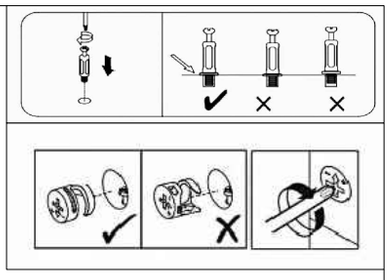

USING CAM LOCK AND QUICKFIT

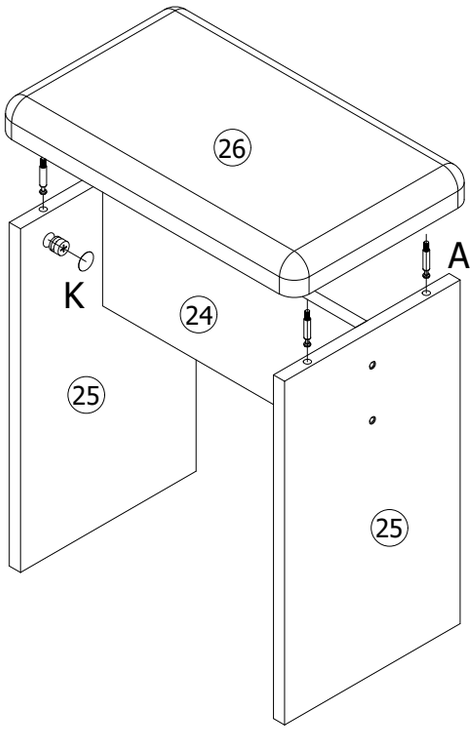

A*4 K*4

24

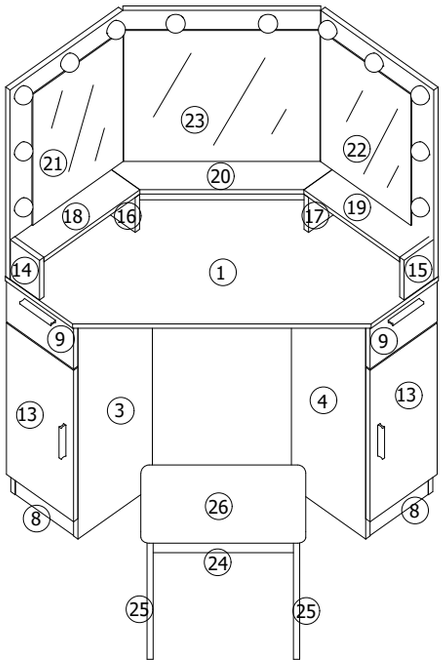

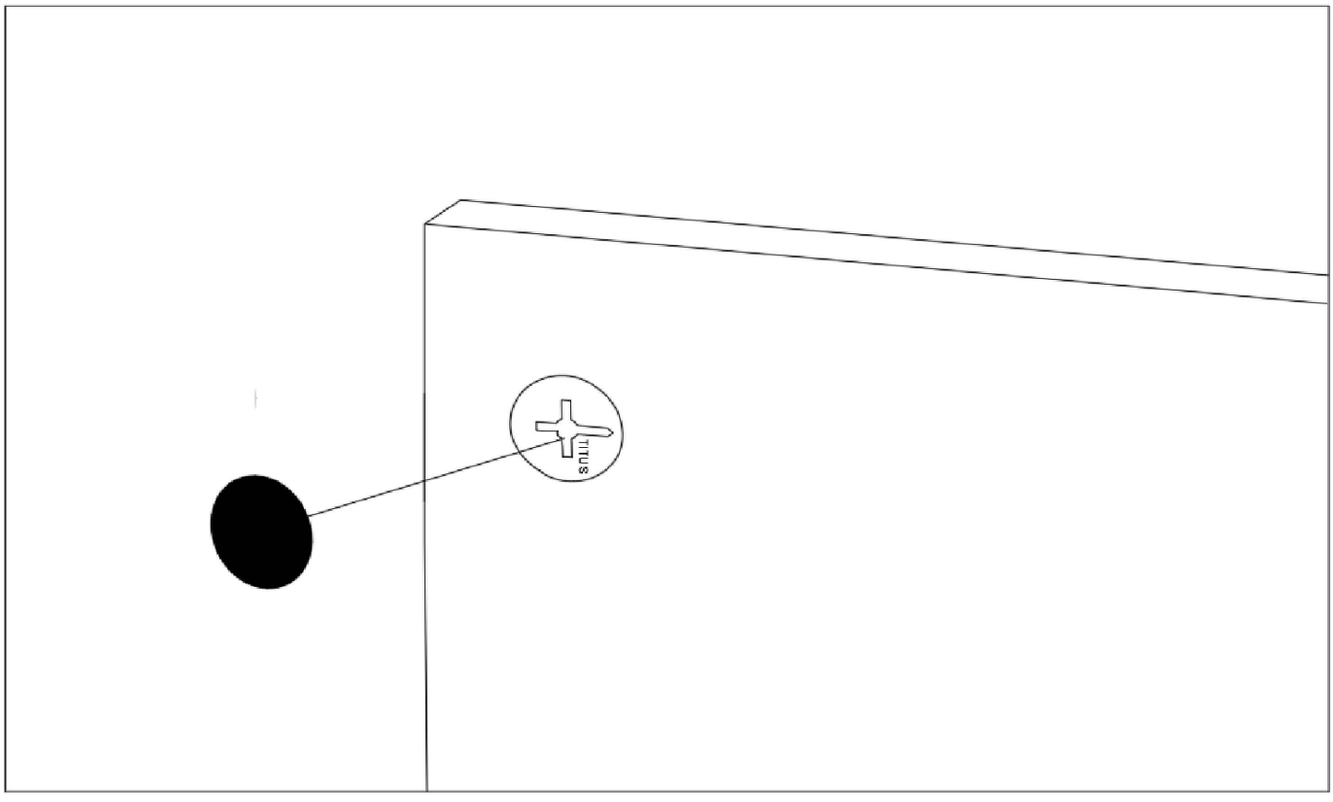

EN:In order to make the product more beautiful,p lease paste hardware K on the exposed holes.