ASSEMBLY INSTRUCTION FOR
CALLOWAY CABINET

PART LIST				
1	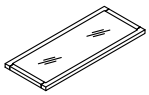	Glass Shelf		2
2		Wooden Shelf		1
Name of Hardware				
A		Shelf Support		12
B		Screw M4x15mm		12
C		Power Adapter		1
D		Tipping Hardware		1
E	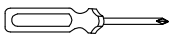	Screwdrivers (Not included)		1

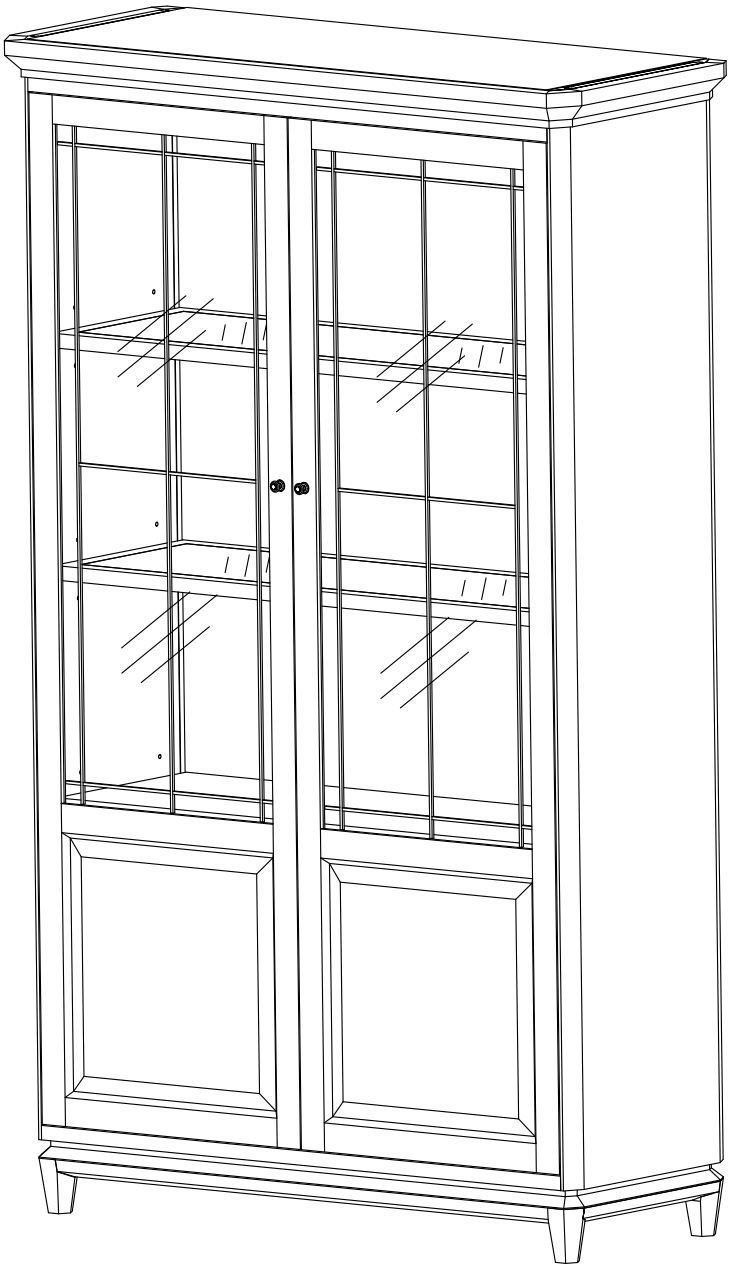

MADE IN VIET NAM

1

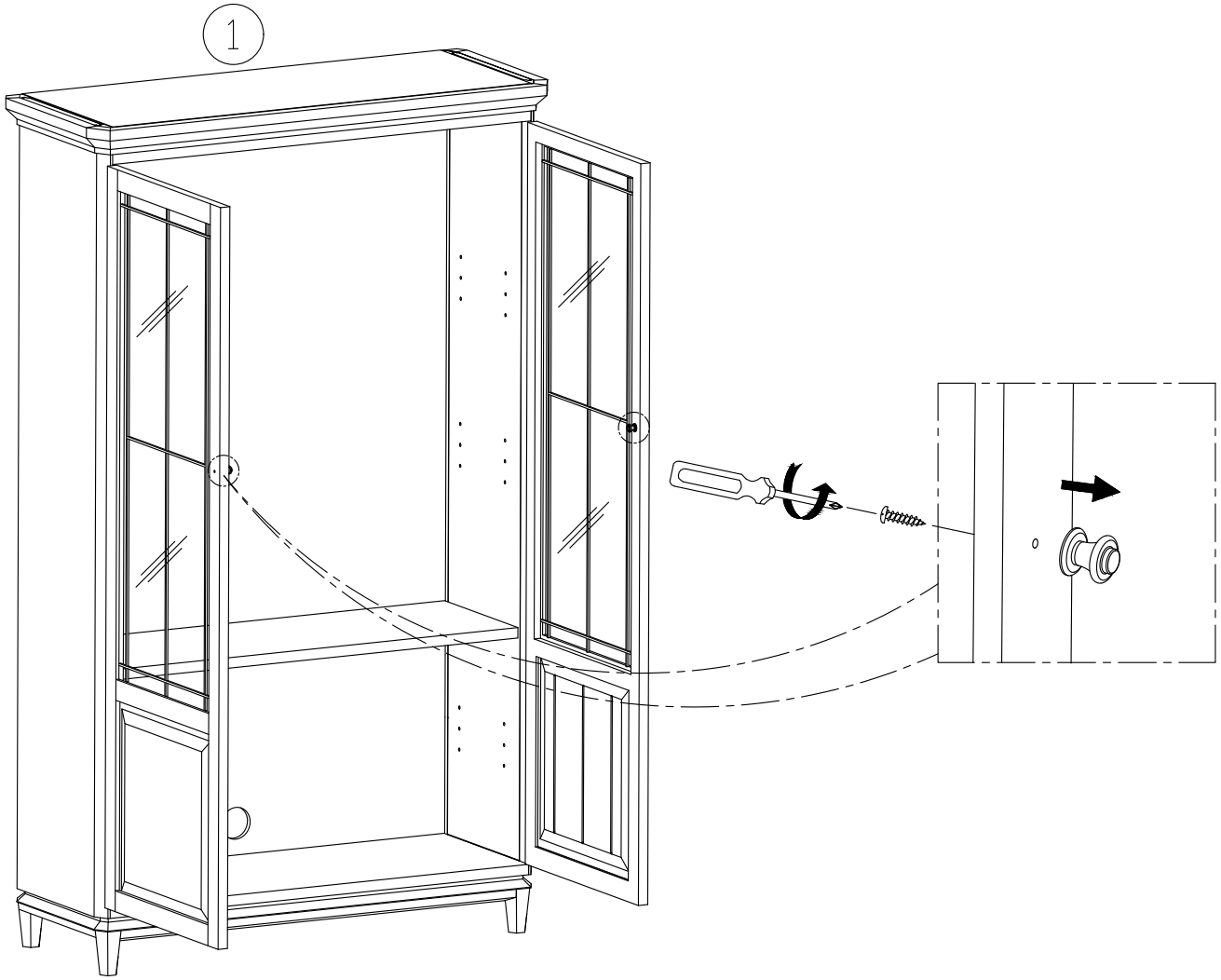

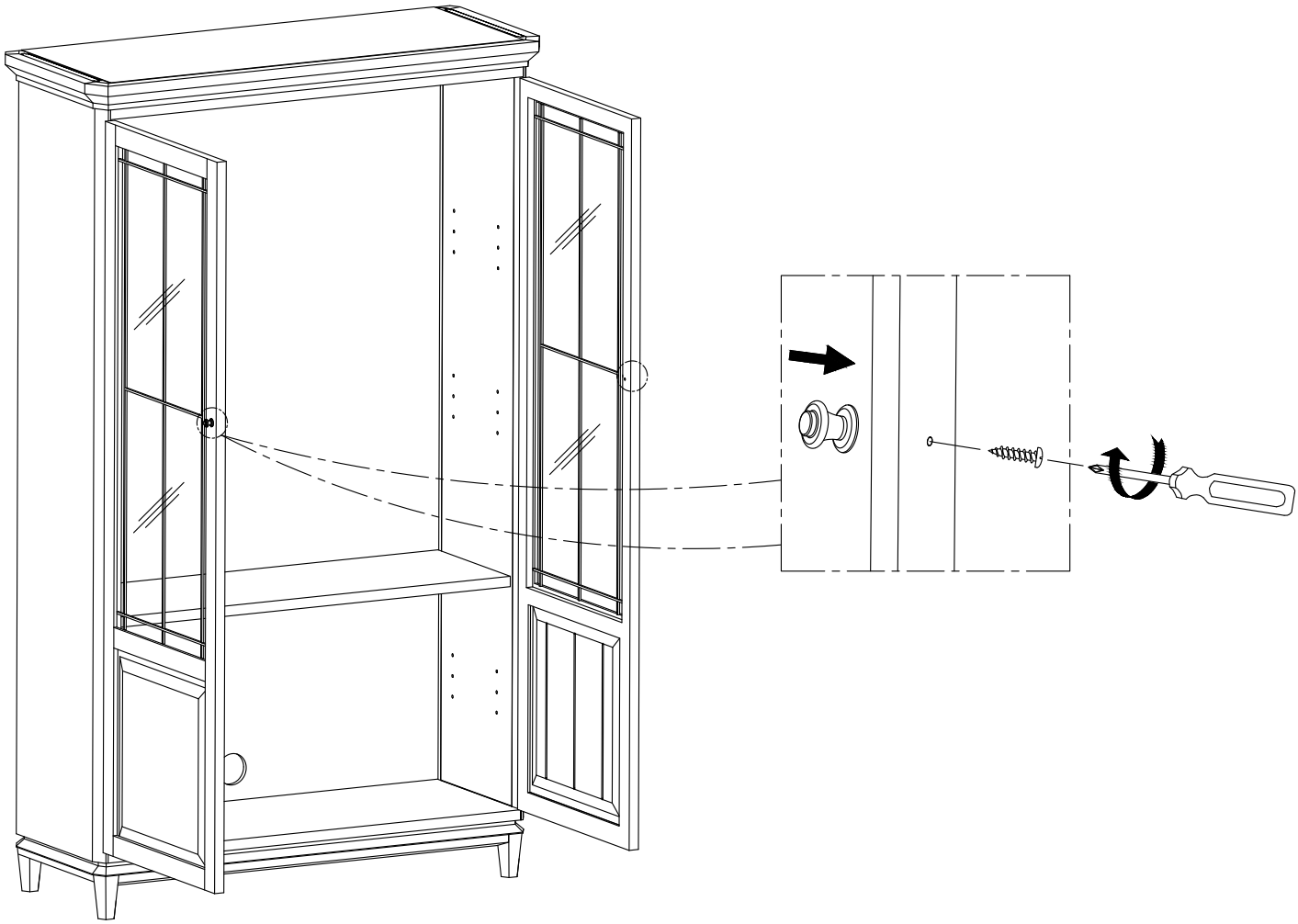

2

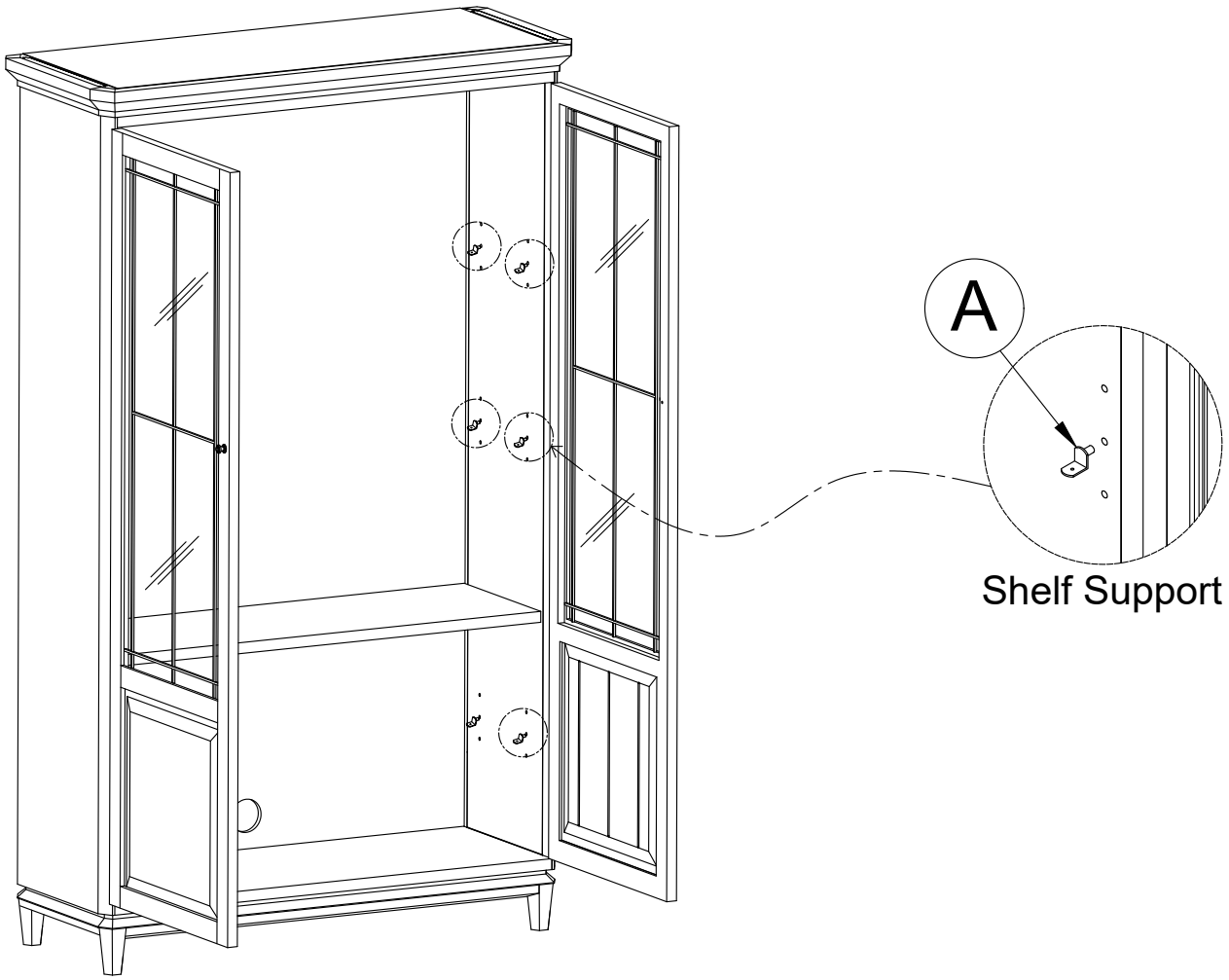

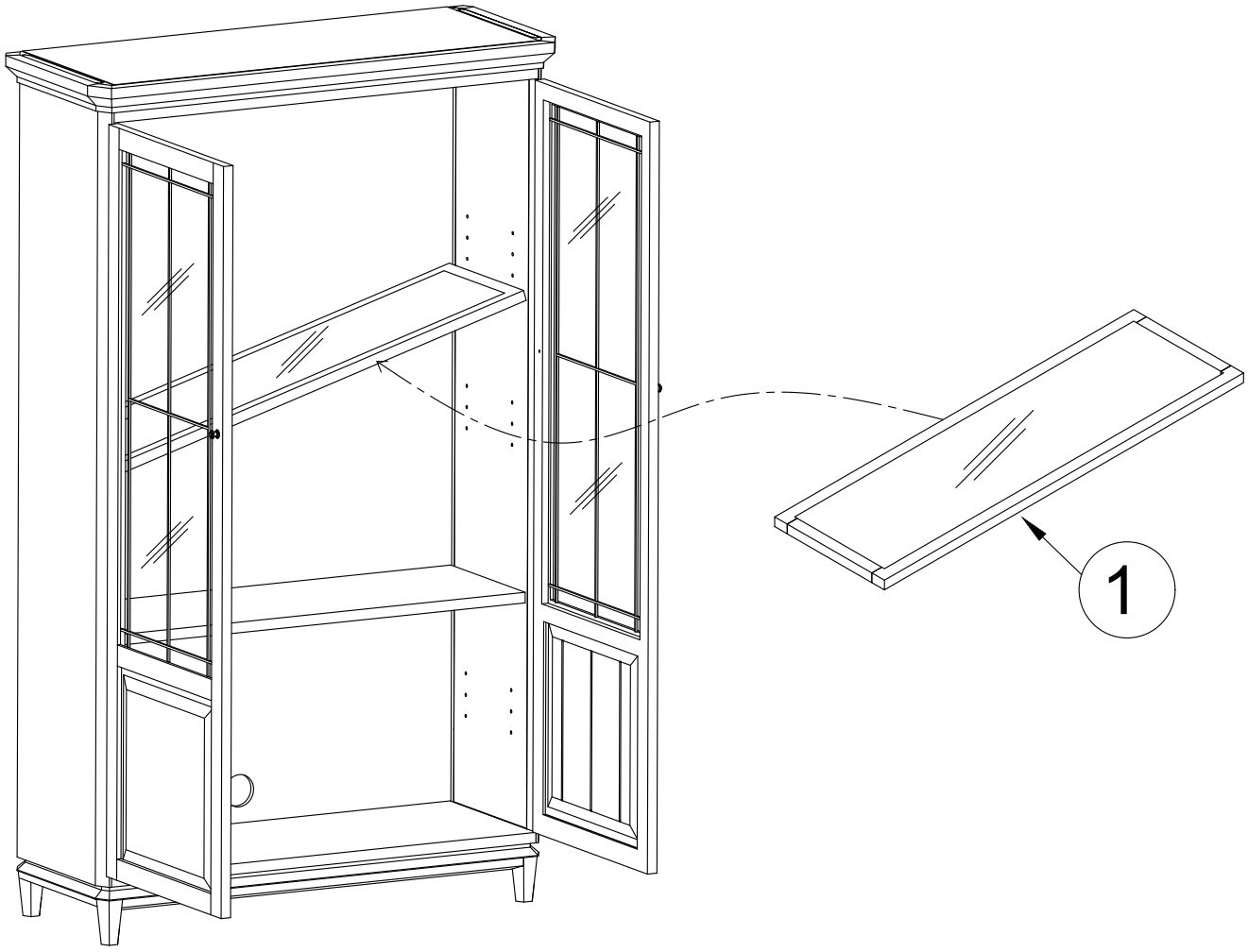

3

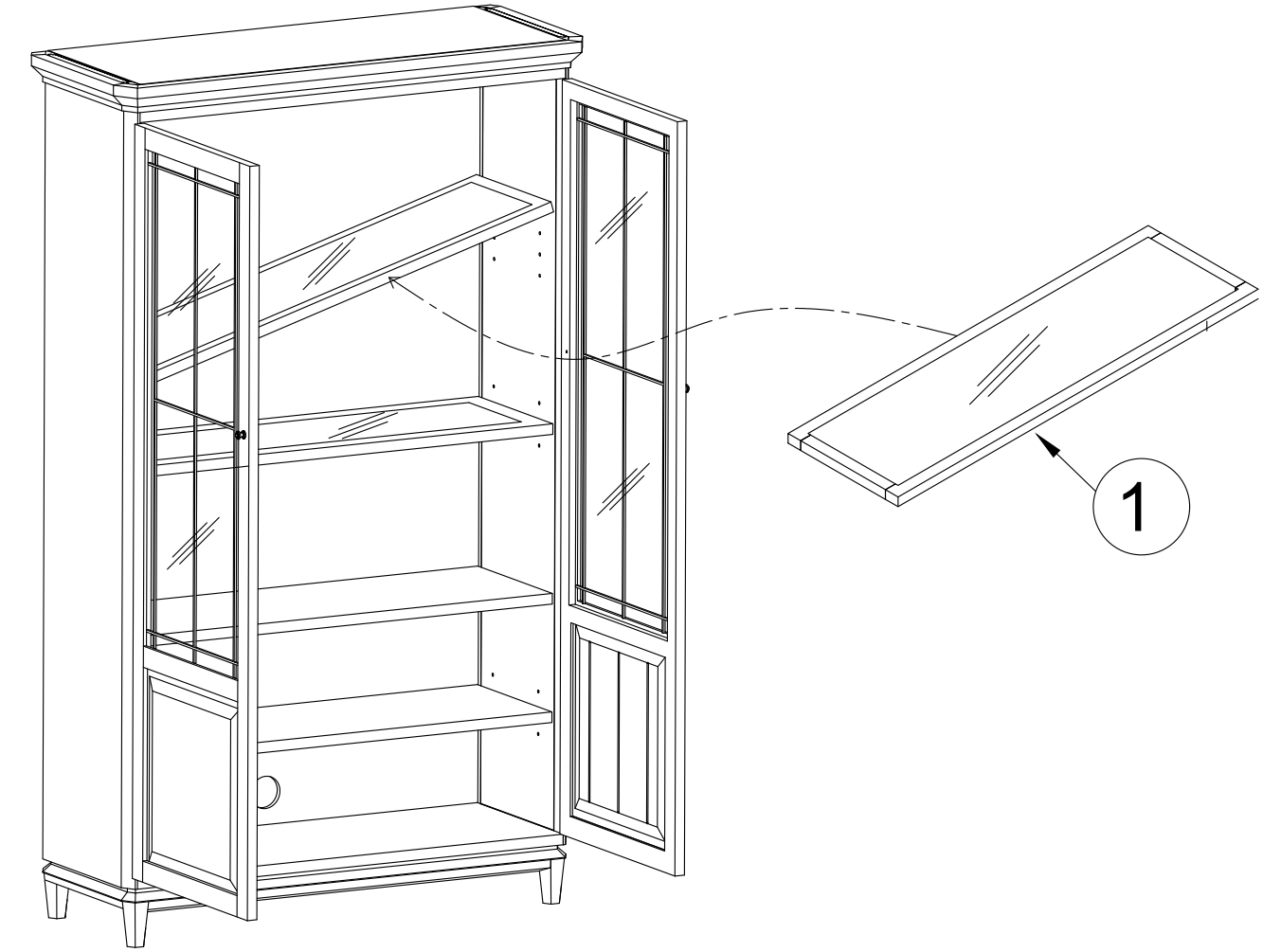

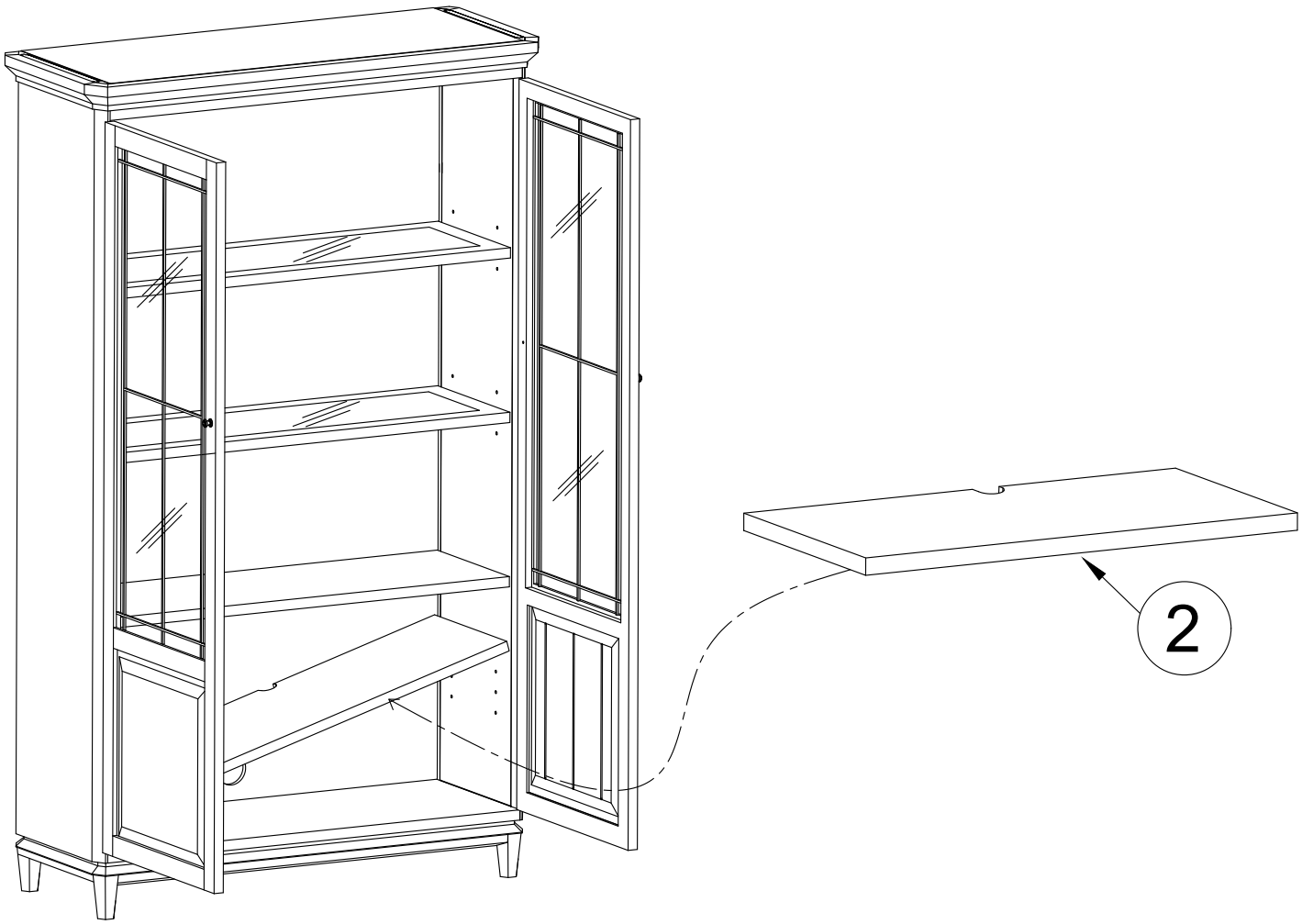

4

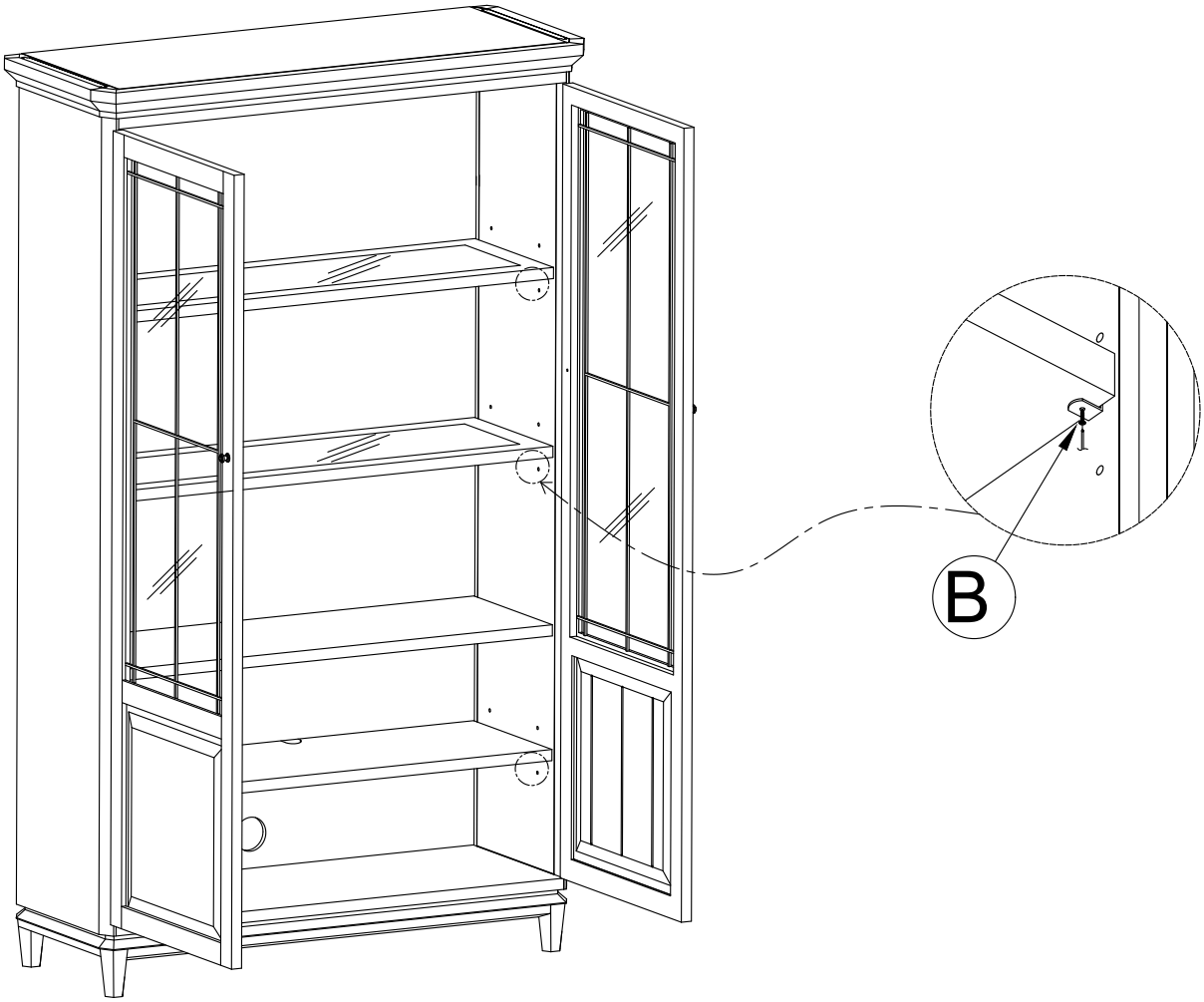

5

Connect the power adapter to the power input cable at the back of the cabinet. Then plug the adapter into a wall outlet .

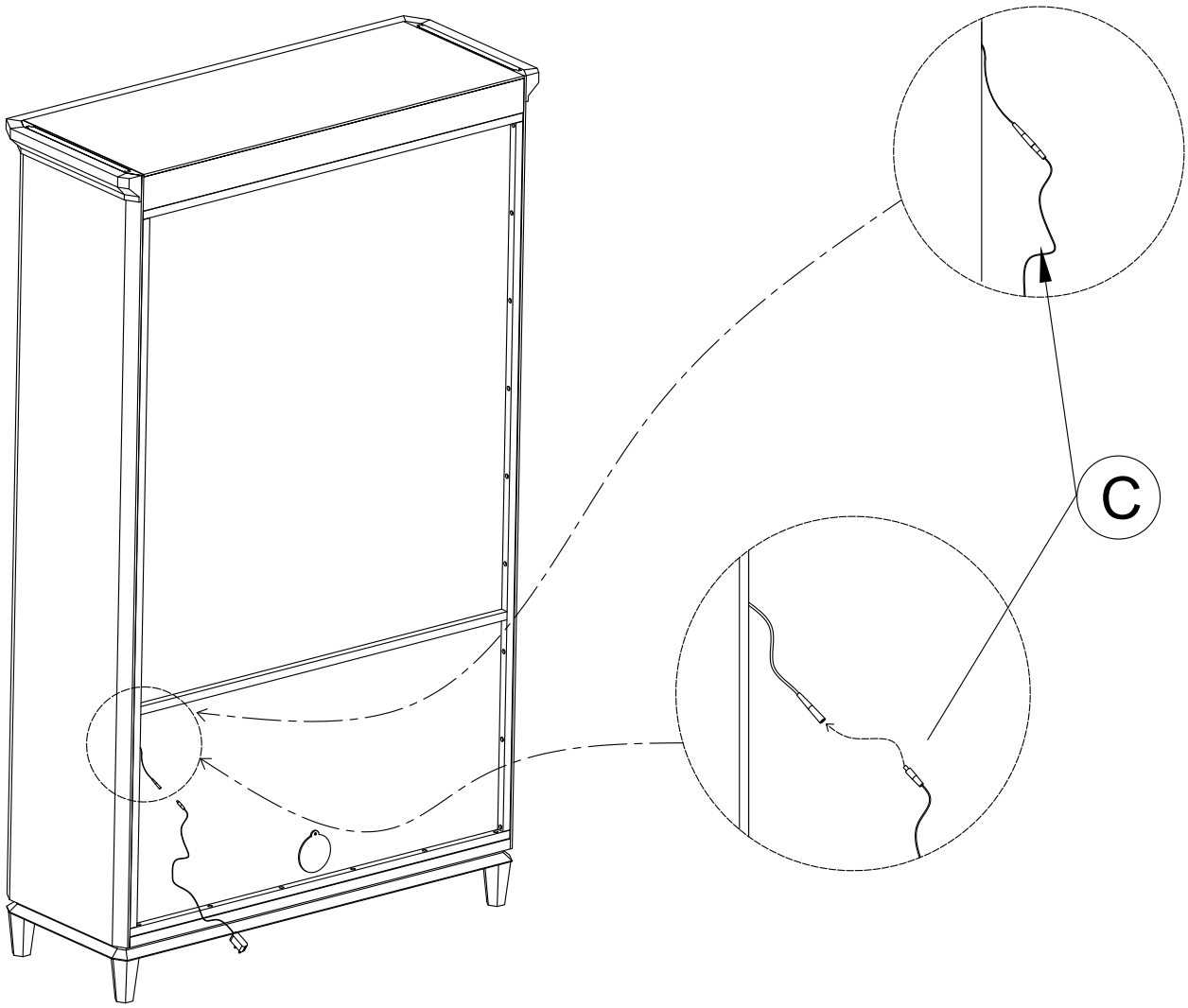

Tipping Hardware

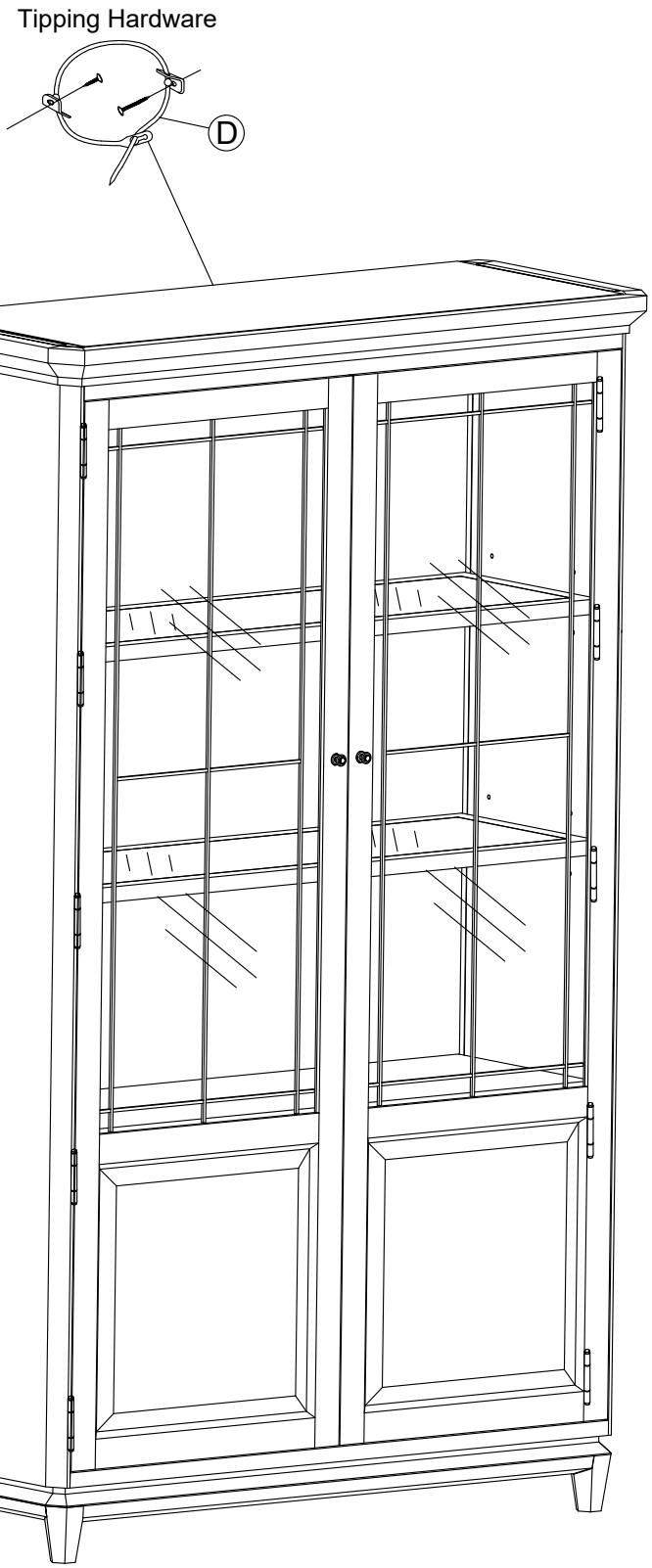

Adjusting Floor Levelers

Your furniture has been expertly crafted and pre-adjusted by professionals. However, slight shifts can occur during transportation. If you notice that the doors are not perfectly aligned or the furniture wobbles, a quick adjustment can help ensure stability and a seamless look.

Adjust the Floor Levelers

Check for Stability - Place the furniture in its final position on a level surface. If it wobbles or doesn't sit evenly, the floor levelers need adjusting.

Locate the Levelers - These are small adjustable feet found at the bottom corners of your furniture.

Adjust as Needed - Using your hand or a wrench, turn the levelers clockwise to raise or counterclockwise to lower the furniture. Make small adjustments and check stability after each turn.

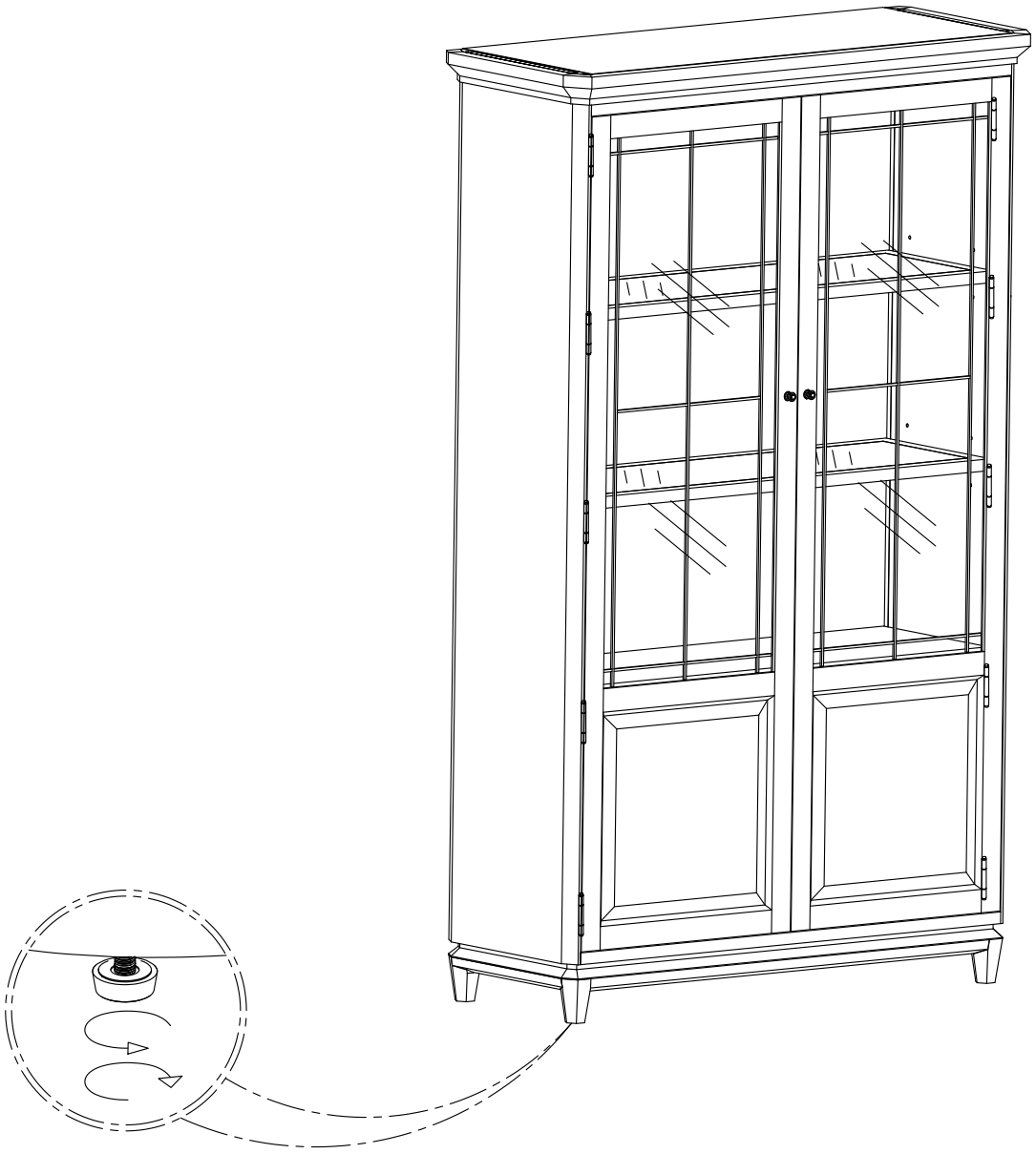

If you need further adjustments, repeat the process in small increments.

USER MANUAL

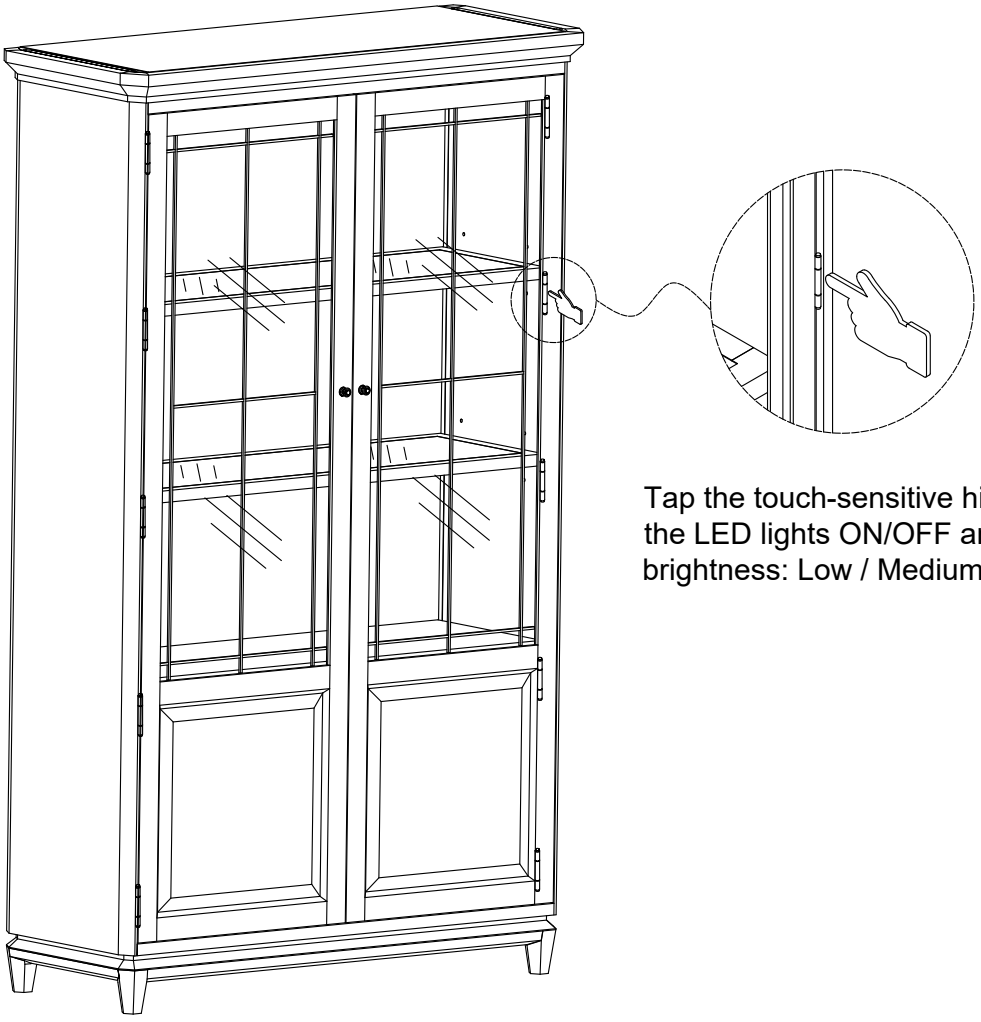

Tap the touch-sensitive hinge to turn the LED lights ON/OFF and adjust brightness: Low / Medium / High