MULTI-FUNCTION MASSAGE CHAIR WITH HEAT

CHAIR MODEL #BT-D83237A30P

Questions, problems, missing parts? Contact technical support department at: 657-341-0362, 9:00 a.m. - 5 p.m., PST, Monday - Friday or email us cs@scsources.com

Please have your model number ready

IMPORTANT SAFETY INFORMATION

- When using an electrical appliance, basic precautions should always be followed.
- Always unplug the chair from the power source after use, and before cleaning.
- Do not reach for chair if large amounts of liquid have spiled on it. Unplug immediately.
- The chair should never be left unattended when plugged in. Unplug from the outlet when not in use, before putting on or taking out parts or attachments.
- Do not use outdoors.
- Do not carry this appliance by the supplied power cord using it as a handle.
- Keep the cord away from heated surfaces.
- Close supervision is necessary when this appliance is used by or near children, invalids or disabled persons.
- This unit is not a toy. Children should not use or play with it.
- Do not operate where aerosol (spray) products are being used or where oxygen is being administered.
- Do not use near eyes or other highly sensitive areas.
- To disconnect, press the OFF button, make sure all functions are stopped, then remove the plug form the outlet.
- Use this appliance only for its intended use as described in this manual. Do not use attachments that haven't been provided with the unit. This appliance is not Intended use for persons (including children) with reduced physical, sensory or mental Capabilities, or lack of experience and knowledge, unless they have been given supervision or instruction concerning use of the appliance by a person responsible for their safety, children should be supervised to ensure that they do not play with this appliance.

IMPORTANT INFORMATION

- Changes or modifications not expressly approved by the party responsible for compliance could void the user's authority to operate this device.

- This device complies with Part 15 of the FCC Rules. Operation is subject to the following two conditions: (1) This device may not cause harmful interference, and (2) This device must accept any interference received, including interference that may cause undesired operation.

- NOTE: This equipment has been tested and found to comply with the limits for a Class B digital device, pursuant to part 15 of the FCC Rules. These limits are designed to provide reasonable protection against harmful interference in a residential installation. This equipment generates, uses, and can radiate radio frequency energy and, if not installed and used in accordance with the instructions, may cause harmful interference to radio communications. However, there is no guarantee that interference will not occur in a particular installation. If this equipment does cause harmful interference to radio or television reception, which can be determined by turning the equipment off and on, the user is encouraged to try to correct the interference by one or more of the following measures:
  —Reorient or relocate the receiving antenna.
  —Increase the separation between the equipment and receiver.
  —Connect the equipment into an outlet on a circuit different from that to which the receiver is connected.
  —Consult the dealer or an experienced radio/TV technician for help.

HEALTH PRECAUTIONS

- If you have any concerns regarding to your health, consult your doctor before using this product.
- Individuals with pacemakers should not use this product.
- If you have pain in a muscle or joint after using for a prolonged period of time.
- Discontinue using and consult your doctor. Persist pain could be a symptom of a more serious condition.

MAINTENANCE

STORAGE INSTRUCTIONS:

Place unit in its box or safety dry and cool place. Avoid form sharp edges or pointed objects which might cut or puncture the fabric. Do not wrap power cord around the unit. DO NOT pull the unit by the power cord.

CLEANING INSTRUCTIONS:

- Ensure the unit is unplugged from the power source, and allow the unit to cool down before cleaning.
- Do not use any liquid to clean. Clean fabric cover by wiping with a damp sponge, using a mild detergent or suds. Pat with clean, dry cloth.

FREQUENTLY ASKED QUESTIONS

Q. I can't find the power cord and remote control. Where is it located?
A. The chair's accessories are packed together and under the seat.

Q. My chair does not recline. Why?
A. On the remote control you must PUSH and HOLD the UP or DOWN button.

Q. Can the heating feature be used independently?
A. Yes, the heating function can be used with or without the massage mode.

Q. I have a medical device, such as a pacemaker, can I use this chair?
A.Please consult a doctor first before using this device.

Q. I turned on the heat mode, but I can't feel anything.
A.The heating feature can take up to 30 min to feel the effects.

Q. How is the chair constructed?
A. The chair has a steel frame and pressed wood construction with high density foam.

ASSEMBLY INSTRUCTIONS

GENERAL INFORMATION, TIPS & TRICKS

1. Please read this instruction prior to assembling this product.
2. To avoid damage, assemble this product on a non-abrasive surface such as carpet.
3. This product is intended for residential use only. Commercial applications are not permitted.
4. Please make sure you have all parts before assembly.

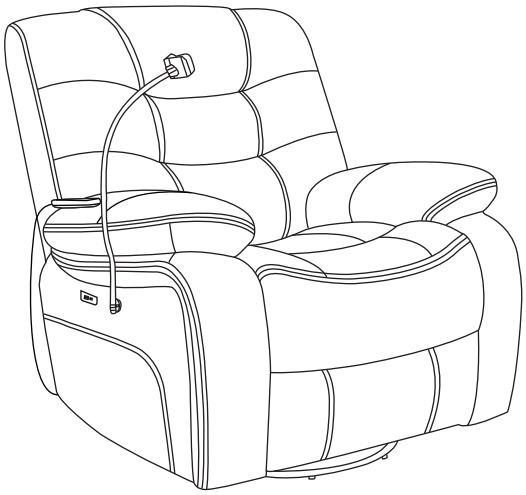

PARTS LIST

A

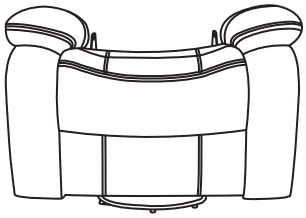

B

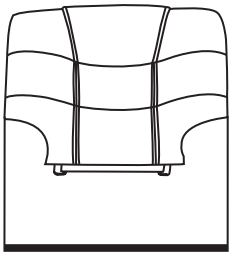

C

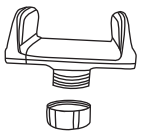

D

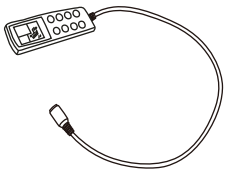

E

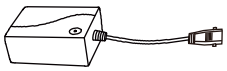

F

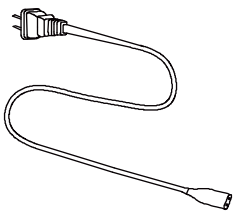

Step 1

Locate the transformer (E), wire plug (F), and remote control (D) are under the seat.

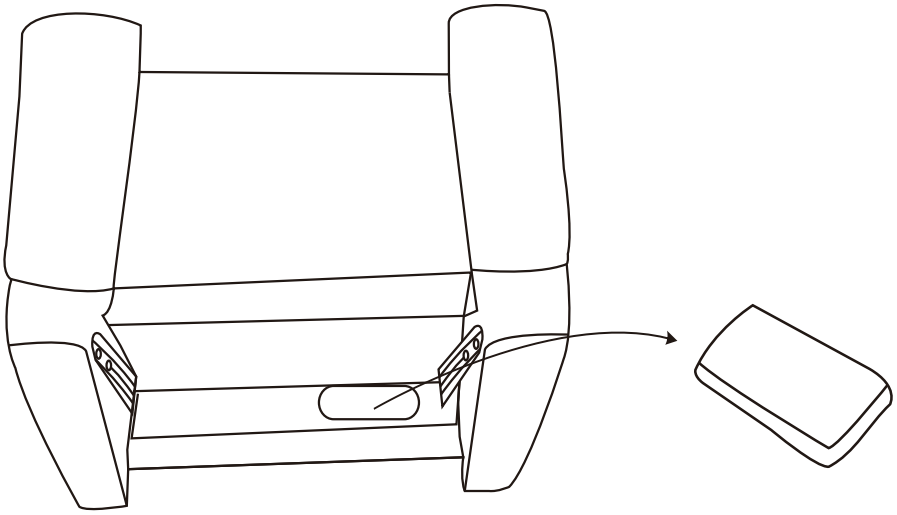

Step 2

Attach backrest (B) to main frame (A) by aligning the metal grooves on backrest to brackets on the main frame as shown.

Ensure the backrest (B) slides down fully over the brackets on the main,frame(A) and firmly press down to secure in place.

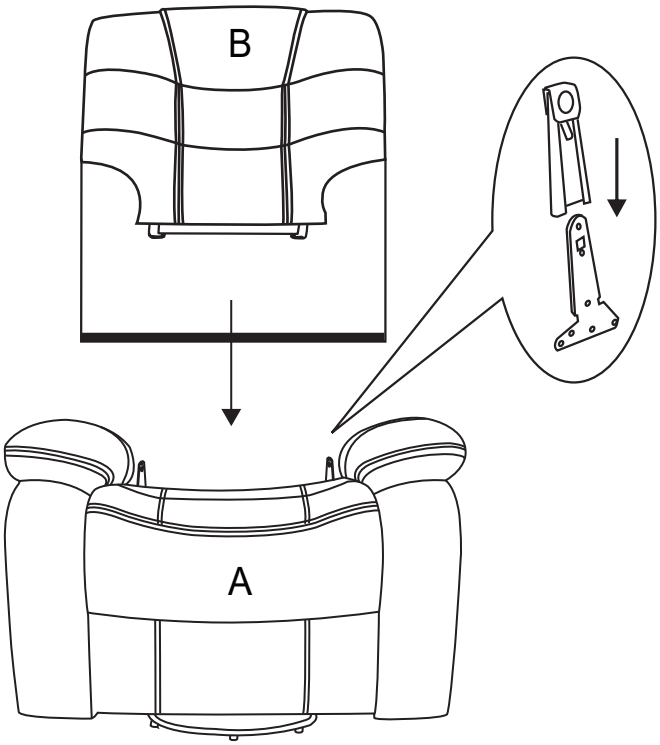

Step 3

Attach the chair bolsters (C) to the backrest (B) by aligning the metal grooves on each side. Make sure to slide the bolsters (C) down fully and press firmly to secure

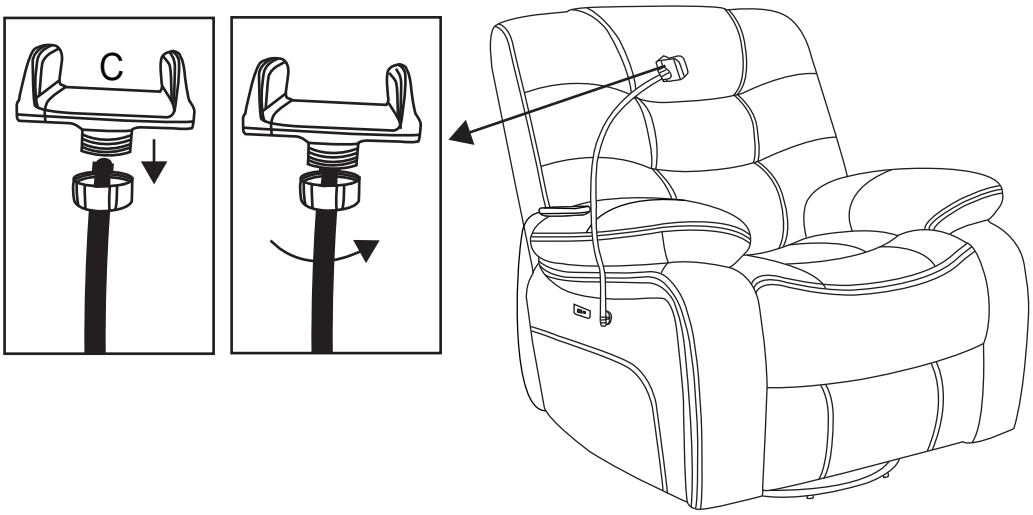

Step 4

A. Connect the three wires attached to backrest (B) with wire plugs attached o the seat (A) according to the corresponding plug type.

B. Connect the remote control to the corresponding plug located INSIDE the SEAT POCKET .

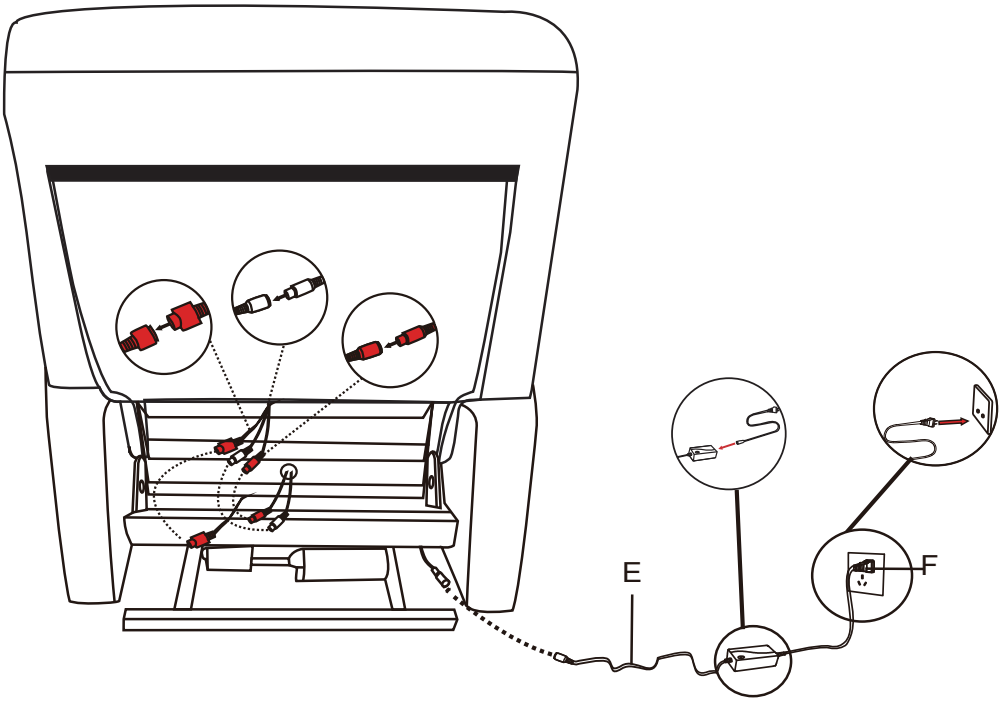

REMOTE CONTROL

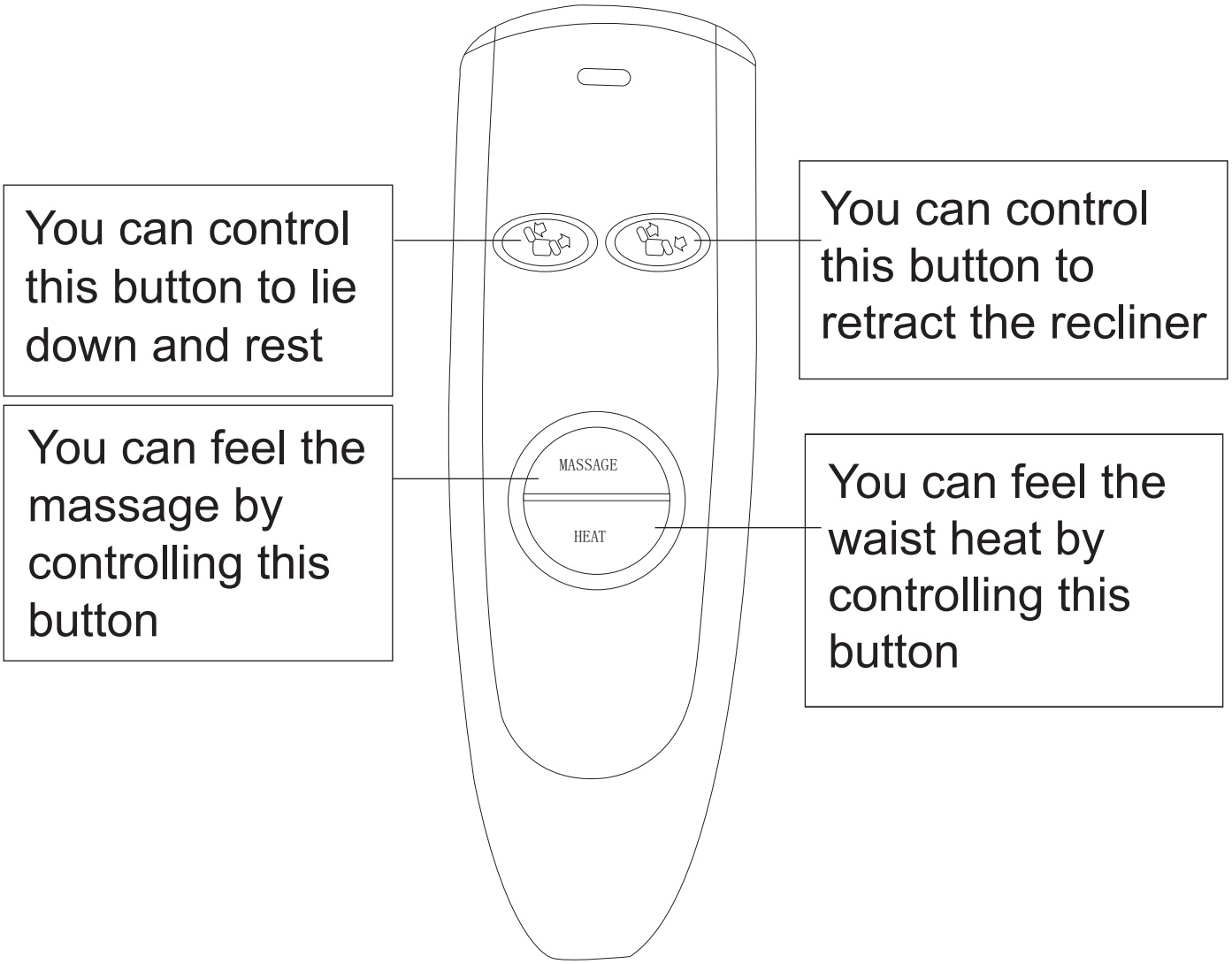

OPERATING INSTRUCTIONS

- Press MASSAGE to start the massage. Vibrate all massagers twice after opening. Then switch back, waist, cushion, and feet to shake in turn, shaking once. Finally, the back and waist vibrate at the same time and the cushion feet vibrate at the same time, vibrate twice.Wireless cycle, can be stopped by remote control.
- Press MASSAGE to POWER OFF the unit.
- Press HEAT button to ENABLE OR DISABLE heating function.
- Press button to recline the chair.
- Press button to retract the chair.
- The MASSAGE and HEAT functions canwork together or can beused separately.

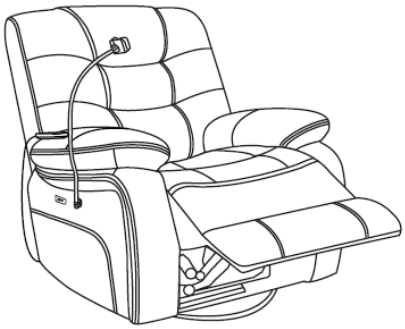

PRESS BUTTON

TO RECLINE

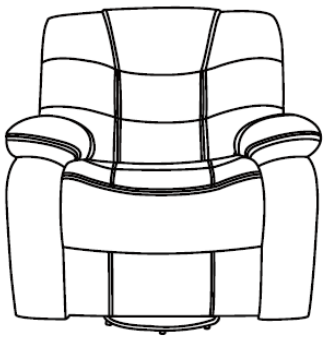

PRESS BUTTON

TO RETRACT

WARNING INFORMATION

- To prevent the chair from tipping over, gently sit down on the chair and avoid throwing yourself onto it. Move the chair into the reclining position slowly, making sure that no children or pets are in close proximity.
- Do not allow children to play on or around the chair, particularly when it is in the reclined position.
- Close the recliner completely before standing.
- Never sit on the footrest when it is extended.
- To eliminate the risk of tip over, do not sit on the arms or footrest.
- The chair is designed to be used by a single adult at a time.
- Maximum bearing weight is 300 lbs.
- Prevent the following people from using this chair: People with severe symptoms of heart disease, high blood pressure, cerebral thrombosis and any people who are sensitive to heat, or people with bad bones, pregnant women, children, and other people who is not suitable to use this product. This is not a medical device.
- To fully recline the chair a minimum distance of 40 inches from the wall or any obstacle directly behind the chair is required.
- Keep any open ¸ames a way from the product.
- Keep sharp objects such as knives, nails, etc. away from the product.
- Prevent water and liquids from the chair to avoid damage such as staining or discoloration to the material and fabric of the chair.

CLEANING & SPECIAL CARE

1. Avoid collision when moving the chair. Move the chair carefully.
2. For light stains spot treat the chair using an approved cleaner or mild detergent. DO NOT USE SOAPY WATER or WAX based cleaners. Using a sponge carefully wipe away stains and dry with a soft cloth.
3. To avoid discoloring do not place the unit in direct sunlight or in the direct path of an air conditioning vent.

1 YEAR LIMITED WARRANTY

The manufacturer warrants this unit against defects in materials and workmanship on functional parts, for a period of 1 year from the original date of purchase. Your sales receipt showing the date of purchase of the product is your proof of purchase. Keep it in a safe place for future reference. This warranty is subject to personal use only, commercial or rental applications will not be covered.

This product is made with the highest quality materials and is warranted to be free from defects in materials and workmanship at the time of purchase. This limited warranty applies to products manufactured or distributed by the manufacturer, are delivered in the continental United States or Canada and extends to the original purchaser, or gift recipient. This warranty becomes valid at the time of purchase and terminates either by the specified time frame listed above and/or owner transfer. Any refunds or monetary compensations must be claimed through the place of purchase (retailer), and not through the manufacturer. Any extended warranties (warranties that cover above and beyond this manufacturer warranty) that are sold through a retailer or third party, are not directly correlated with this products' limited warranty, and may be redirected to said retailer or third party for coverage.

This warranty extends through the manufacturer of the product, and covers functional parts only. Cosmetics are not covered, unless unequivocally determined it is a workmanship defect. Shipping damage should be addressed with the shipping company, retailer, or place of purchase, not the manufacturer unless the manufacturer was the direct shipper.

The manufacturer's sole obligation under this warranty shall be limited to furnishing the original purchaser replacement parts for units deemed repairable by the supplier's warranty department. The purchaser is responsible for insuring any parts shipped or returned, if desired. The purchaser is responsible to prepay any shipping charges (both ways) including, but not limited to taxes and duties. All exchanged parts and products replaced under this warranty will become the property of manufacturer. The manufacturer reserves the right to change manufacturers of replacement parts or products for use, in order to cover any existing warranty.
The purchaser may be asked to provide the supplier with proof of purchase documents (including the date of purchase) if requested. Any evidence of alteration, erasing, or forgery of proof of purchase documents will be just cause to VOID this limited warranty. Products, in which the serial number has been defaced or removed are not eligible for warranty coverage.

This warranty does not apply if the unit has been subject to negligence, fabrication, misuse, abuse, or repairs, alteration by non-manufacturer authorized personnel, inappropriate installations, or any case beyond the control of the manufacturer. Examples of warranty invalidation may also include, but are not limited to:

- Outdoor applications
- Normal wear/tear/weathering including but not limited to fabric stains / peeling.
- Pet/consumer accidents
- Purchases from dealers unauthorized by the manufacturer (Authorization in writing)

The manufacturer shall not be liable for any loss due to use (or misuse) of the unit or other incidental or consequential costs, expense or damages without irrefutable foundations. Under no circumstances shall the manufacturer or any of its representatives be held liable for injury to any person or damage to any property, however arising. Any implied warranty shall have duration equal of the applicable warranty stated above.
Specifications are subject to change without notice or obligation.
This limited warranty gives the original purchaser specific legal rights. Other rights may vary from state to state.

NEED HELP? CONTACT US: Monday – Friday, 9 am – 5 pm PST **657-341-0362** or Email us: **cs@scsources.com**