INSTRUCTION MANUAL

Assembly video reference:

Dining Chair

Tik Tok

Instagram

YouTube

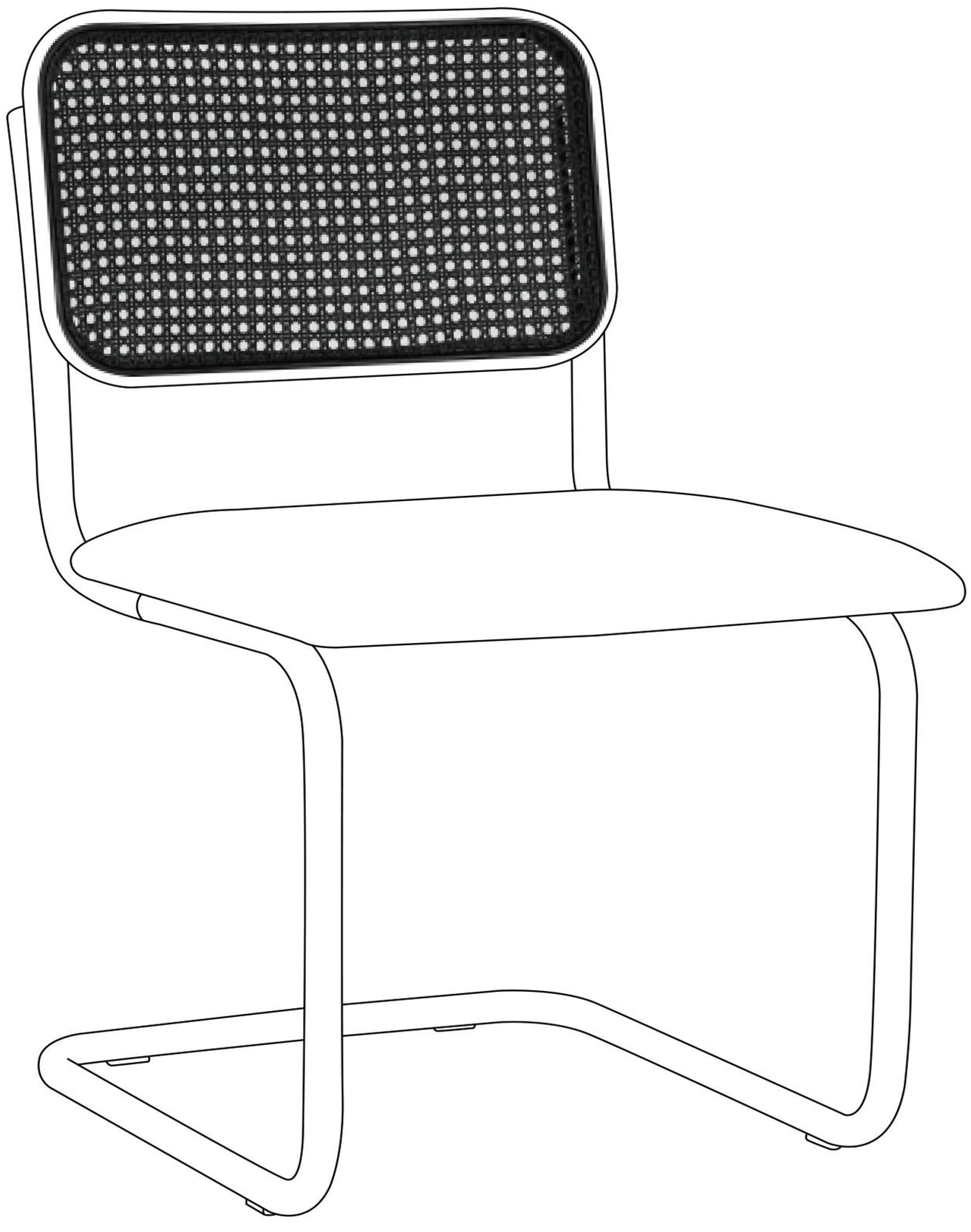

Please read the Manual carefully before operation. If the parts were missed or damaged, please contact us on Amazon or by after-sale e-mail. We will reply and solve the problem for you in 24 hours.

Jecangs@outlook.com

ASSEMBLY INSTRUCTION

STEP:1

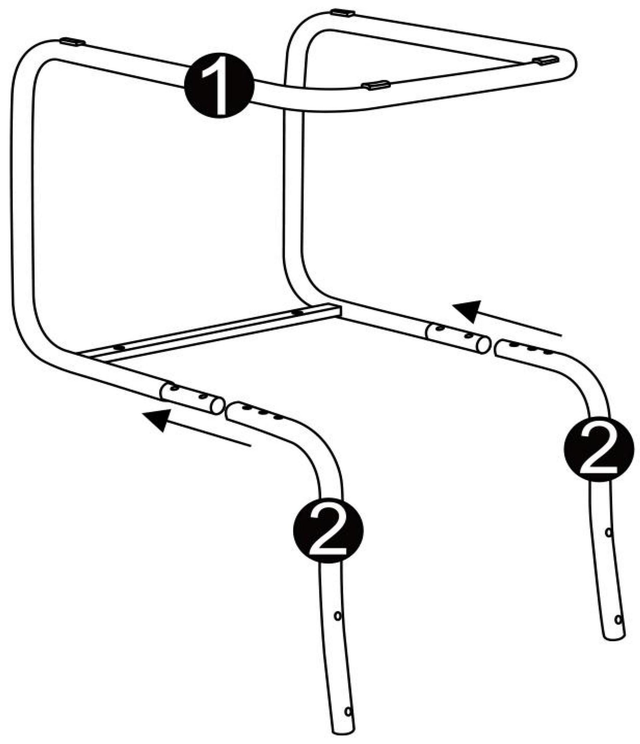

STEP:2

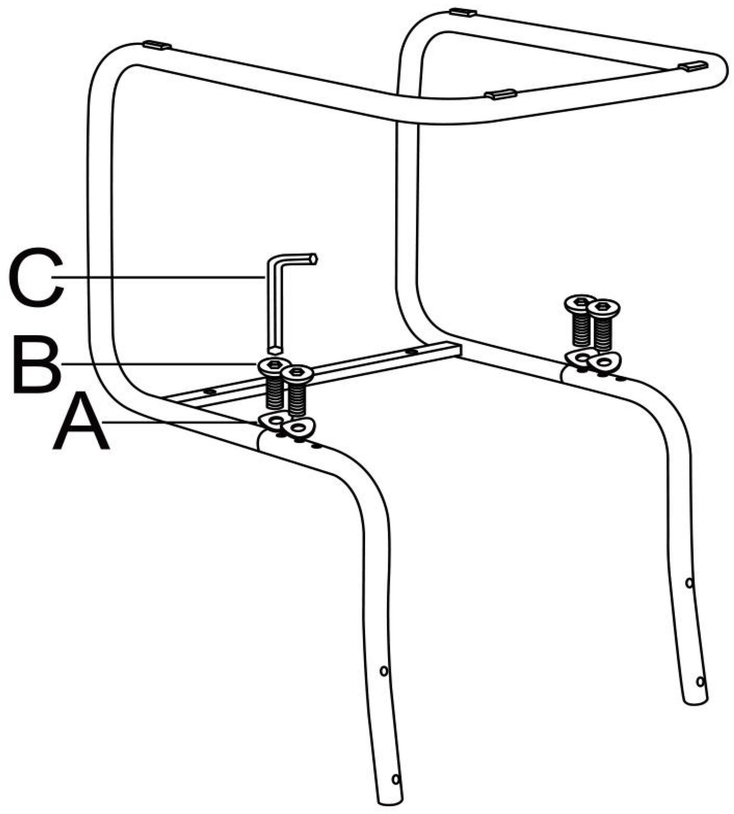

STEP:3

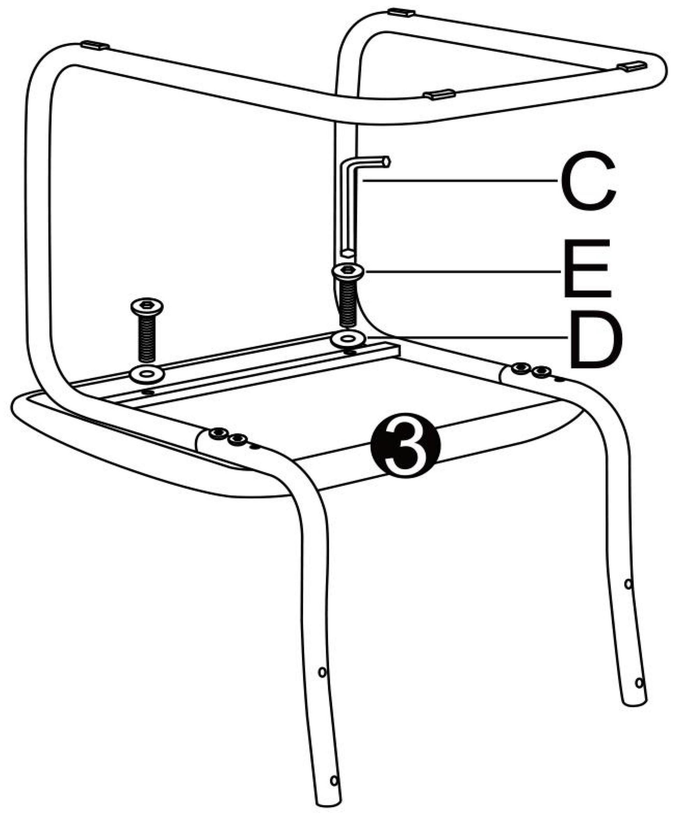

STEP:4

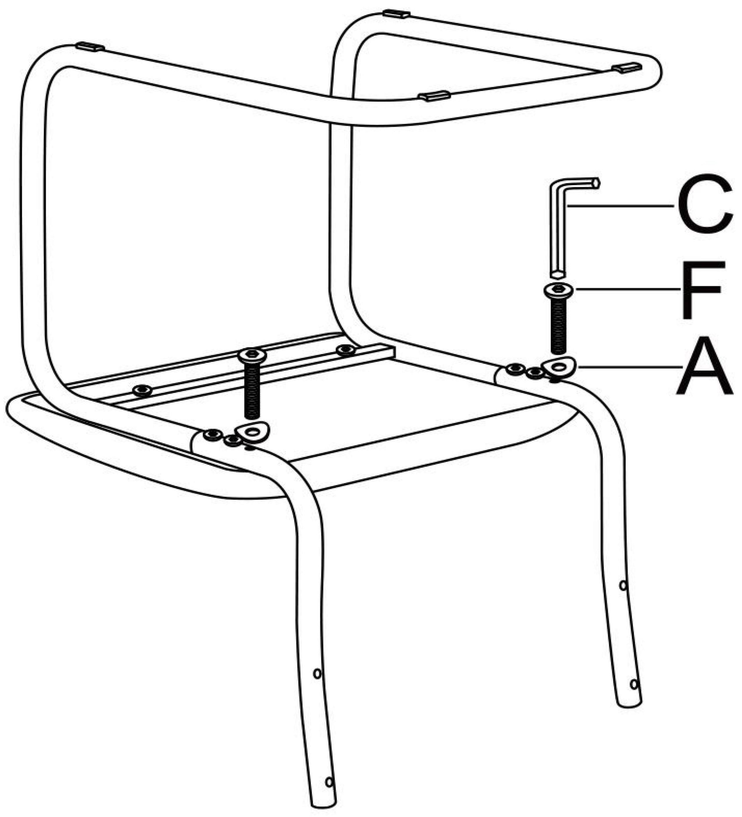

STEP:5

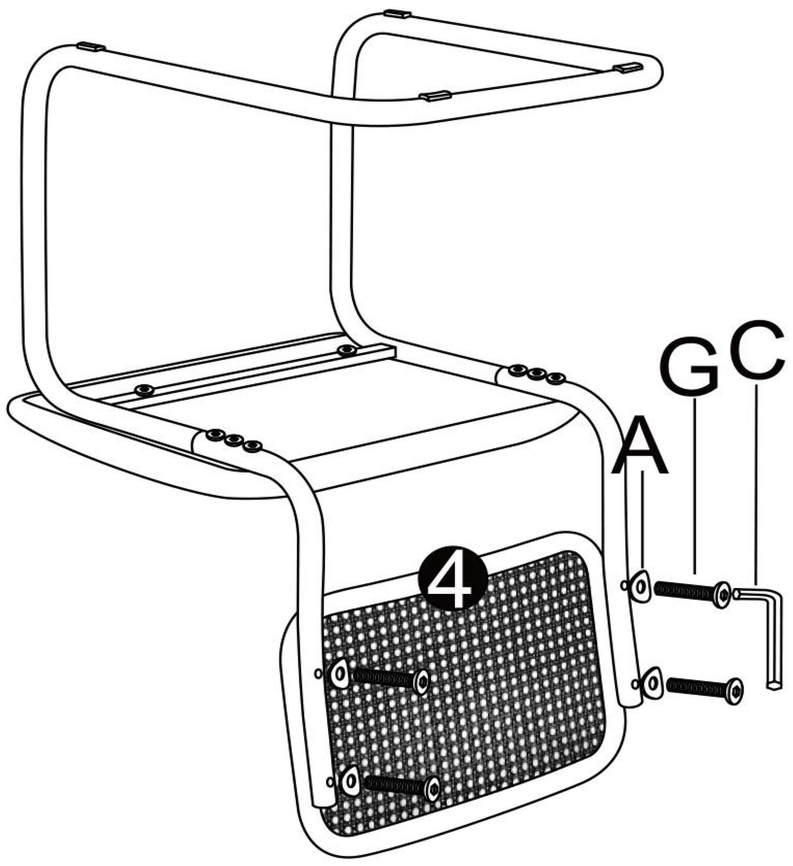

STEP:6

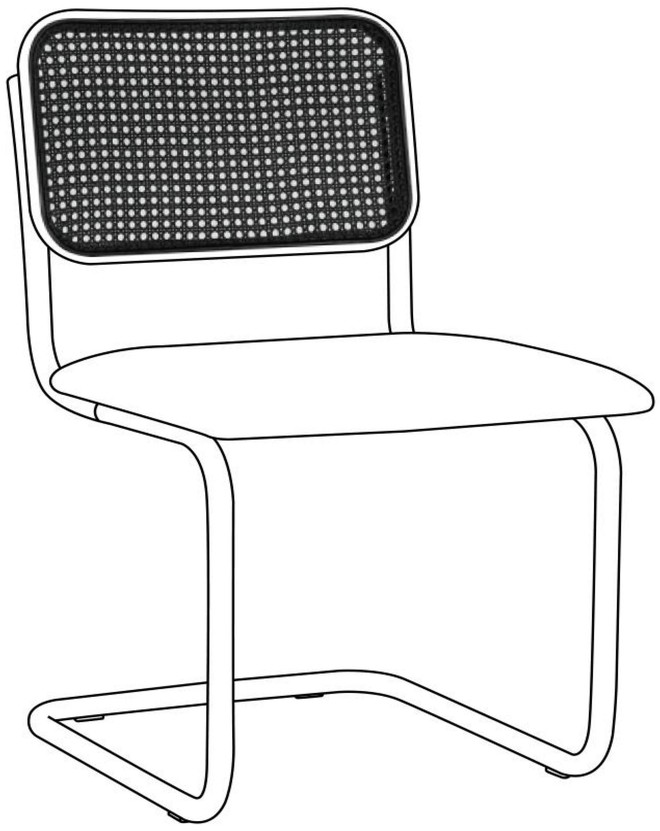

❶ 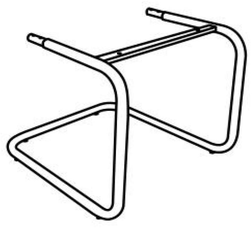 x1	❷ 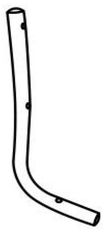 x2	❸ x1	❹ 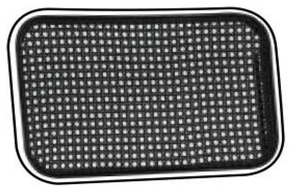 x1			
A M6xΦ18x1.5mm x10	B M6x16mm x4	C x1	D M6xΦ16x1.5mm x2	E M6x25mm x2	F 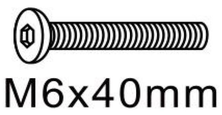 M6x40mm x2	G M6x35mm x4

CONTACT US !

Please don't return the product directly!

Contact our friendly customer service team first for help.

①

Platform after-sale message

②

Jecangs@outlook.com

Contact with our after-sale service, pls send the order No. and related pictures to us.
We will reply you within 24 hours, and solve the problem ASAP.