Multifunctional storage
Assembly Instructions



For product support or inguiries, please reach out to us at **harpaqservice@gmail.com**

Parts List

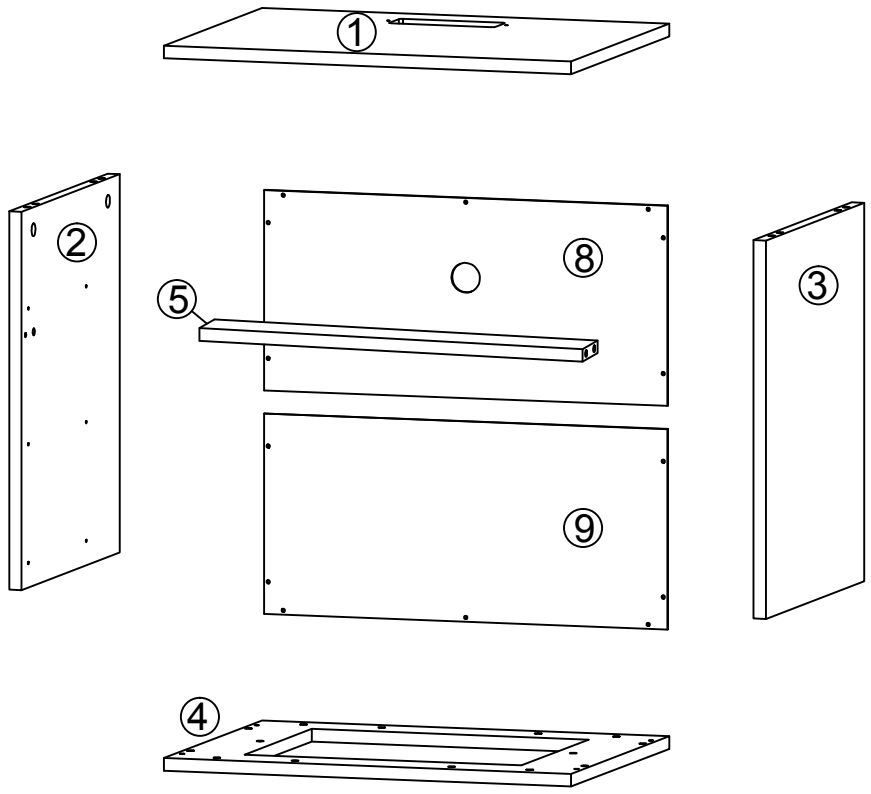

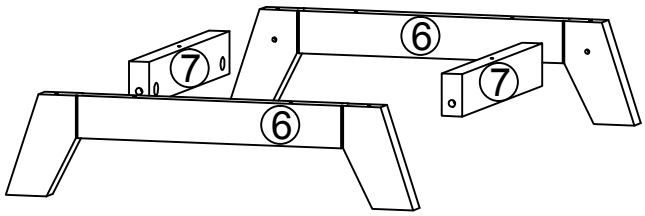

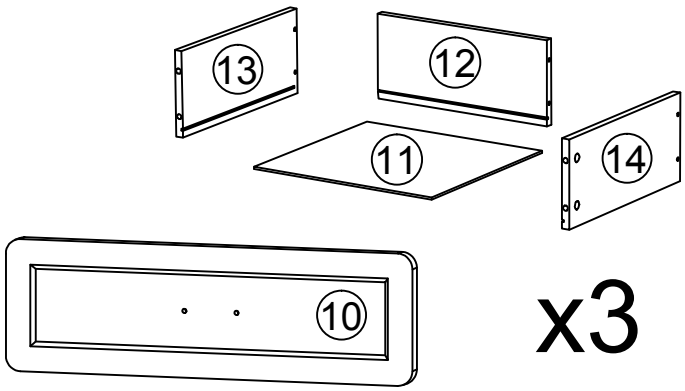

x3

For product support or inguiries, please reach out to us at **harpaqservice@gmail.com**

Hardware

A 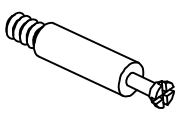 M6 x 35mm 22+2PCS	B  Ø15 x 9mm 22+2PCS	C 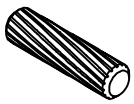 Ø8 x 30mm 18+2PCS	E 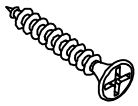 Ø4 x 30mm 12+2PCS
F  Ø3.5 x 12mm 38+4PCS	G  Ø3.5 x 12mm 14+1PCS	I 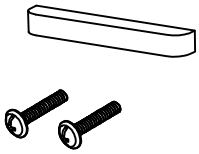 Ø4 x 16mm 3SETS	J 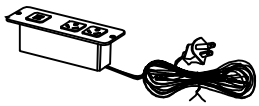 1SETS
M 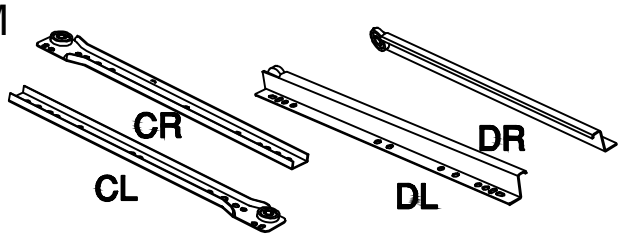 L300mm 3 SETS		N 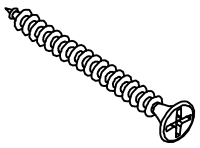 Ø4 x 40mm 14+2PCS	

For product support or inguiries, please reach out to us at **harpaqservice@gmail.com**

ASSEMBLY MATERIAL

Item no.	Reference Image	QTY.
①		1
②	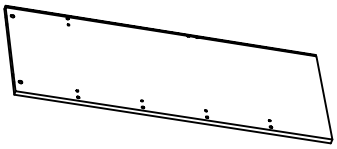	1
③	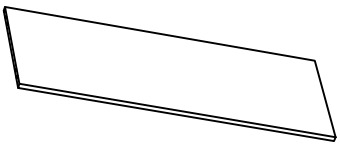	1
④	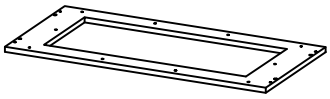	1
⑤		1
⑥		2
⑦	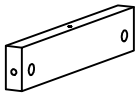	2
⑧	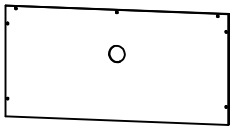	1
⑨	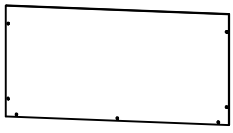	1

Item no.	Reference Image	QTY.
⑩	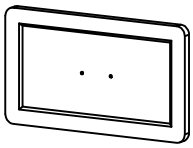	3
⑪		3
⑫	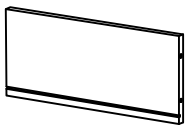	3
⑬	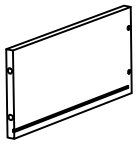	3
⑭	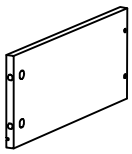	3

For product support or inguiries, please reach out to us at **harpaqservice@gmail.com**

How do we finish the installation of the cam lock system?

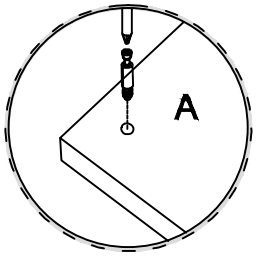

1.Screw a cam bolt A into the panel

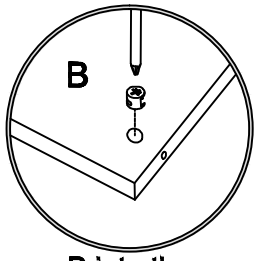

2.Push a cam B into the panel, make sure the arrow feature on the cam B points to the panel edge

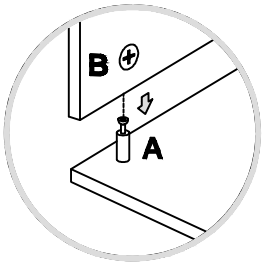

3.Align cam bolt(s) A with cam(s) B and then insert cam bolt(s) A into cross-bored hole(s) completely

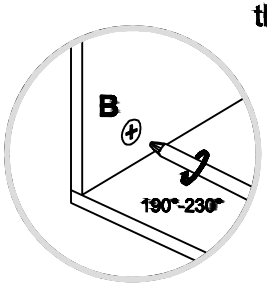

4.Rotate cam(s) B clockwise 190°-230° to lock 2 panels together

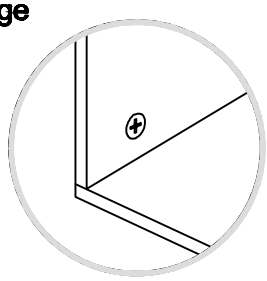

5. 2 panels should be tight against with each other and the connection should be rigid

---

Insert the wood dowel [C] at least half way by tapping lightly with a rubber mallet, IF NECESSARY.

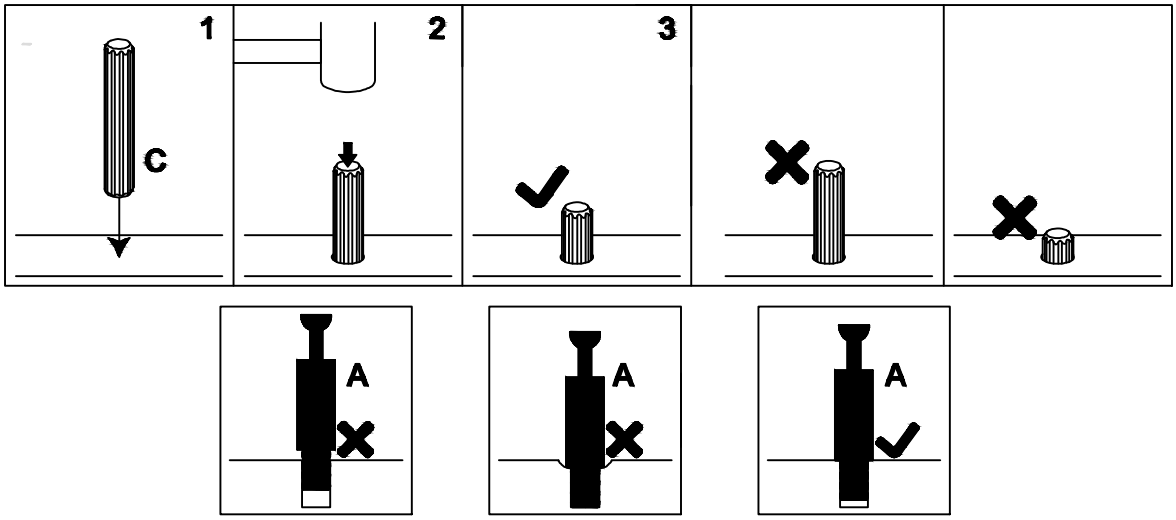

For product support or inguiries, please reach out to us at **harpaqservice@gmail.com**

Step 1

F  X 18

Ø3.5 x 12mm

First secure the two screws with pre-drilled holes to ensure the rail is properly positioned.
Then, install the first reinforcement screw (which hae no pre drilled hole) to enhance overall stability.

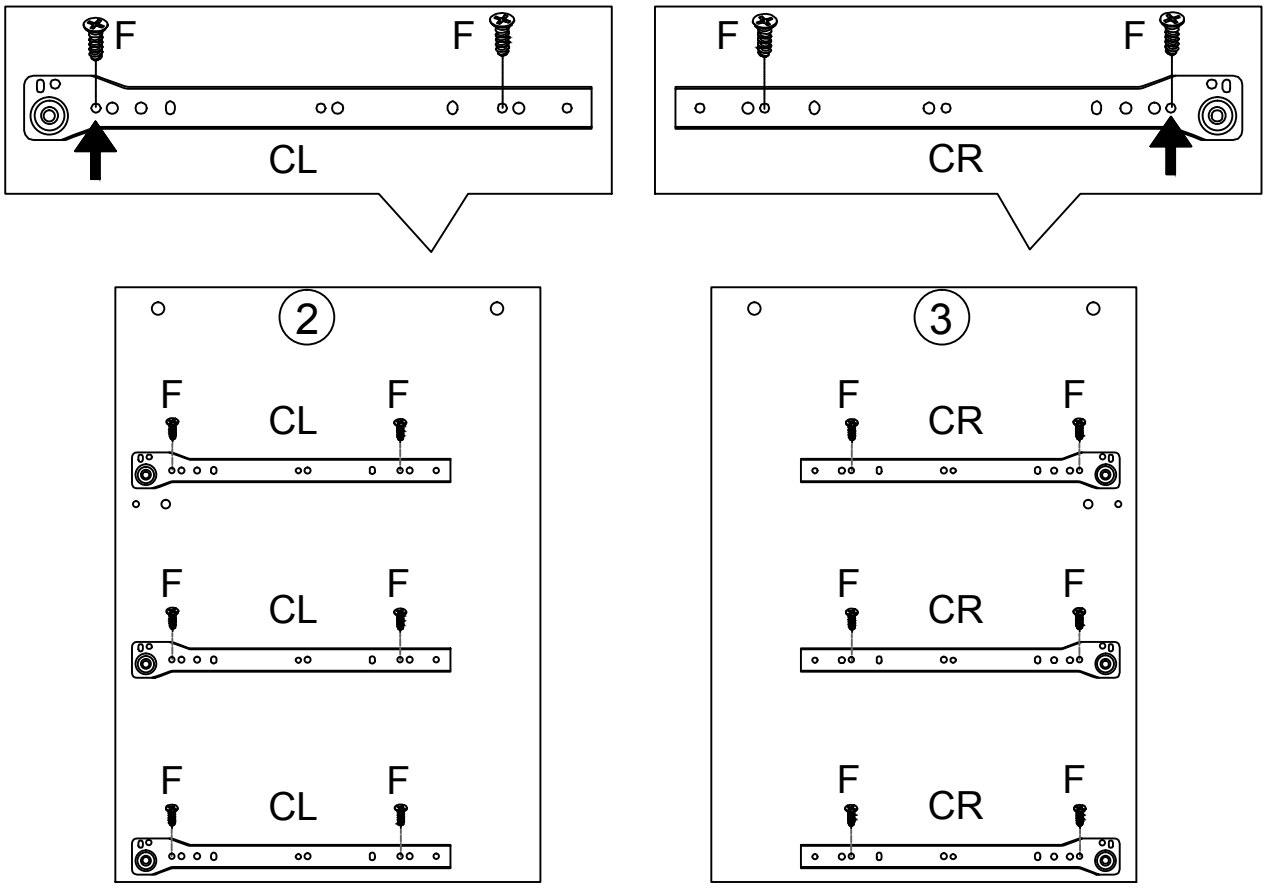

Step 2

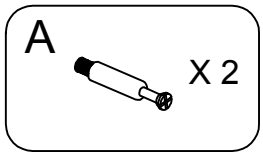

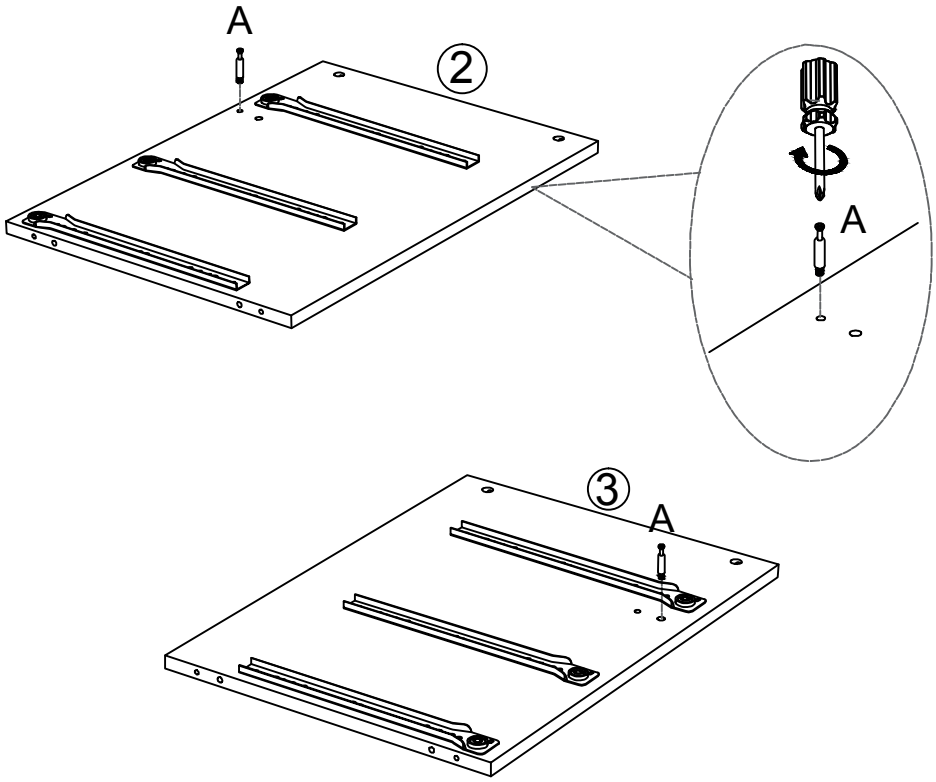

Step 3

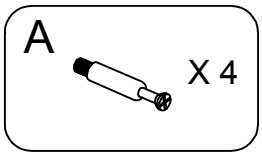

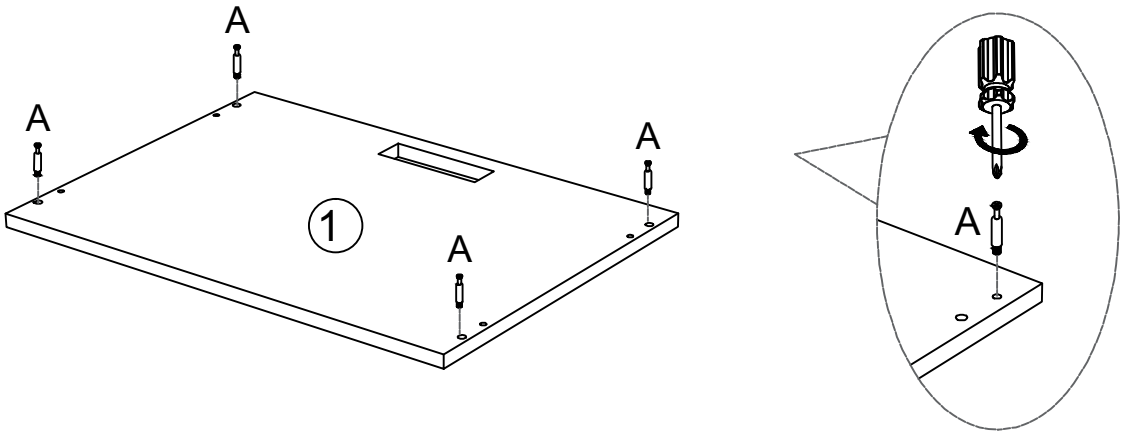

For product support or inguiries, please reach out to us at **harpaqservice@gmail.com**

Step 4

B X 1

C X 1
Ø8 x 30mm

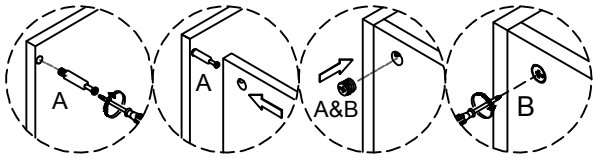

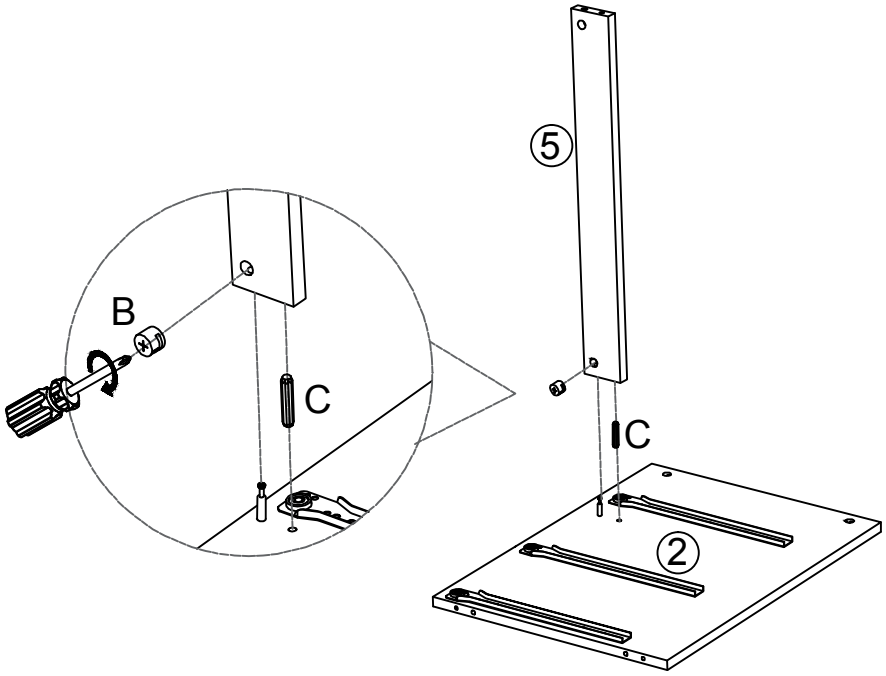

Step 5

B X 1

C X 1
Ø8 x 30mm

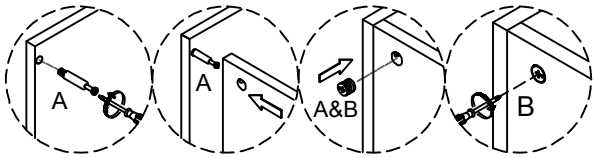

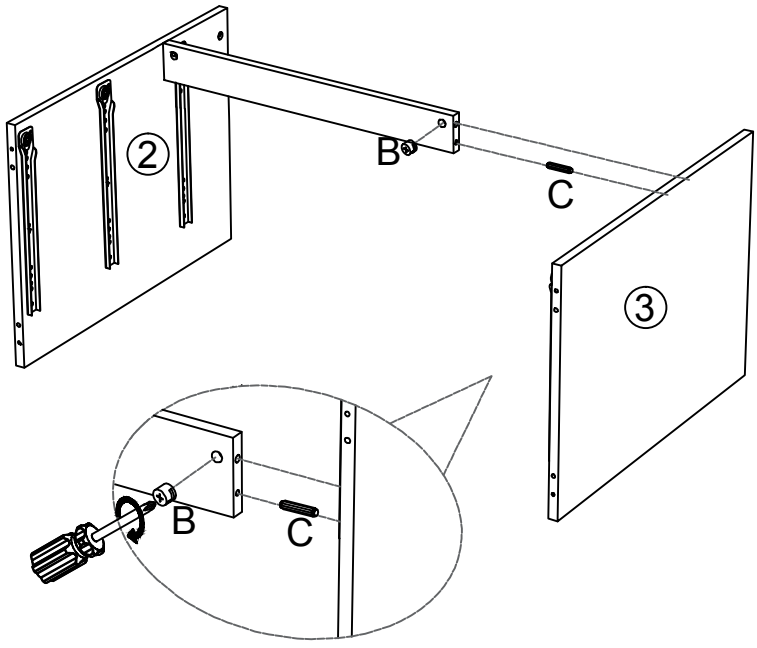

For product support or inguiries, please reach out to us at **harpaqservice@gmail.com**

Step 6

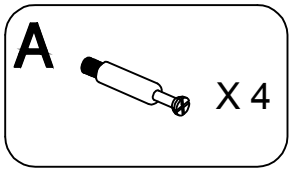

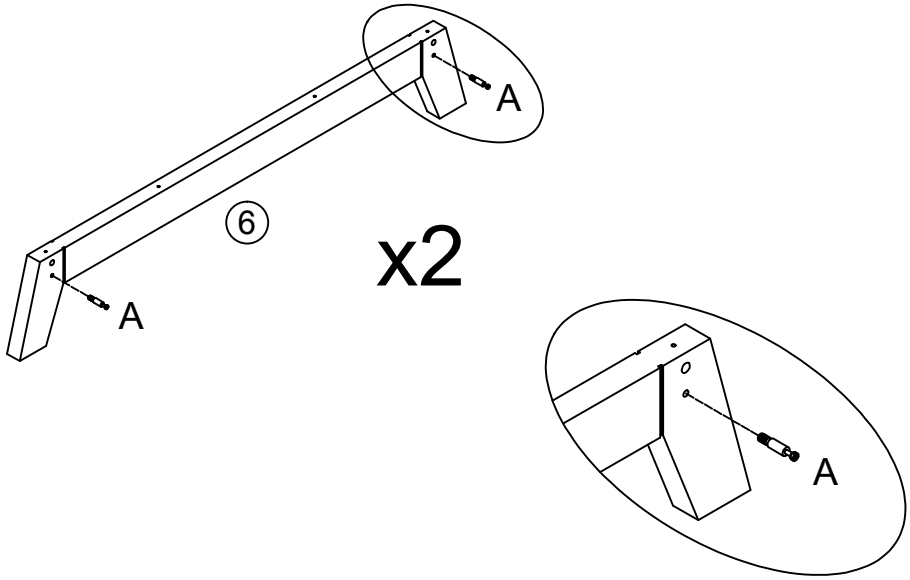

Step 7

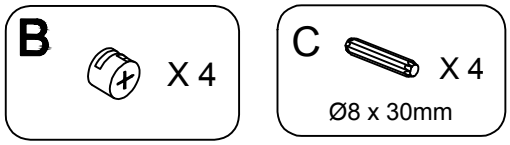

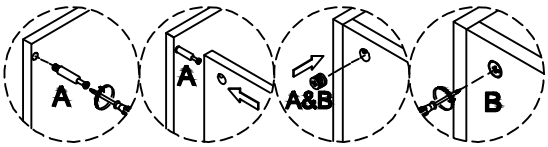

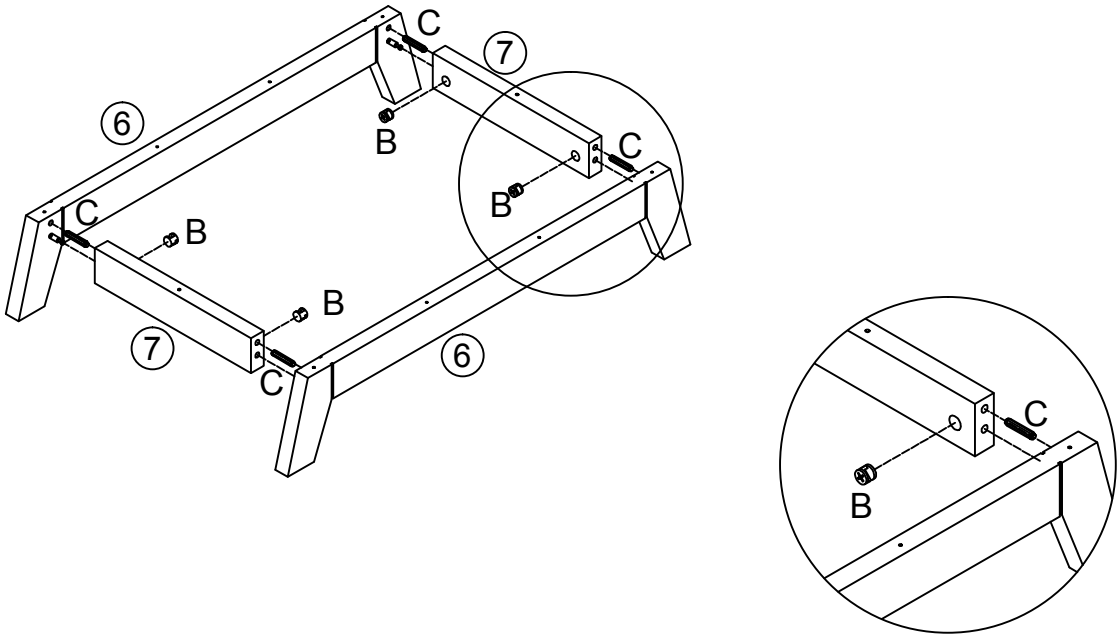

For product support or inguiries, please reach out to us at **harpaqservice@gmail.com**

Step 8

N X 10
Ø4 x 40mm

C X 4
Ø8 x 30mm

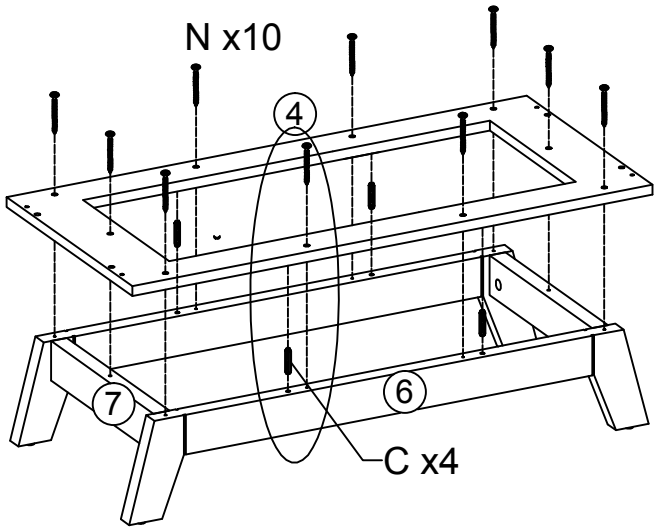

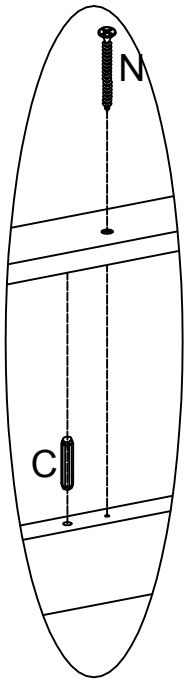

Step 9

C X 4
Ø8×30mm

N X 4
Ø4×45mm

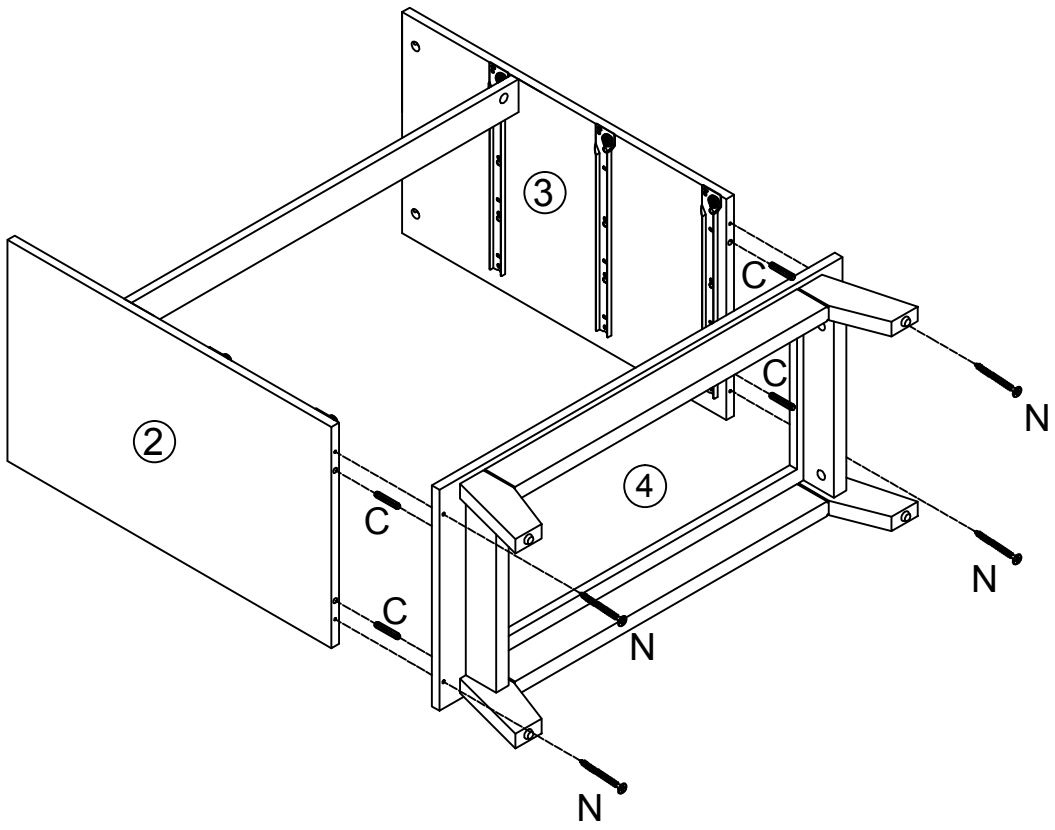

For product support or inguiries, please reach out to us at **harpaqservice@gmail.com**

Step 10

B X 4

C X 4
Ø8×30mm

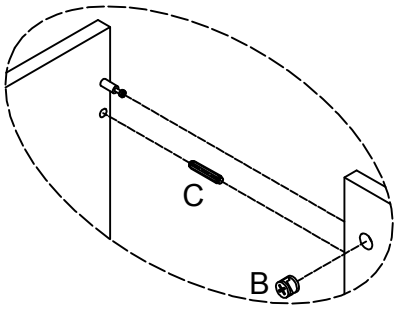

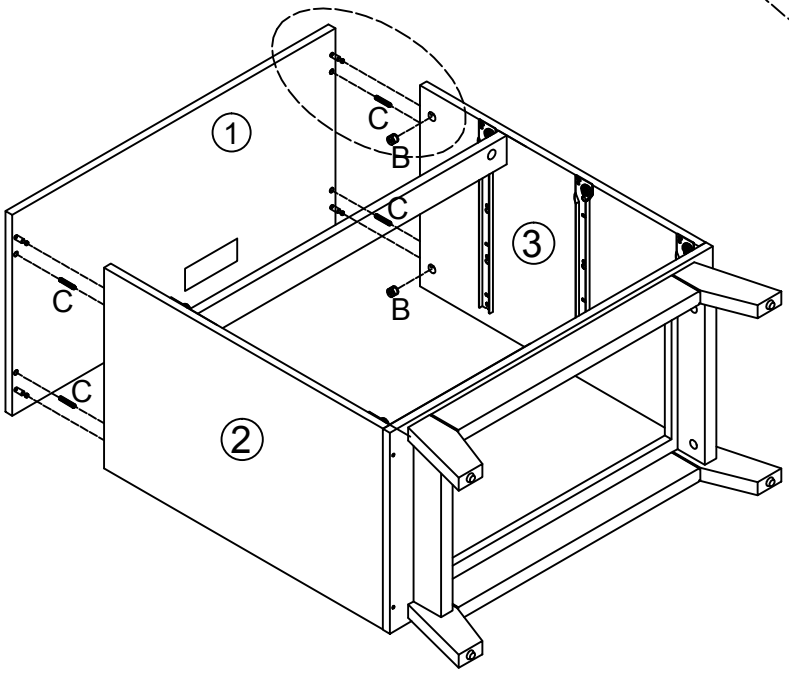

Step 11

G X 14
Ø3.5 x 12mm

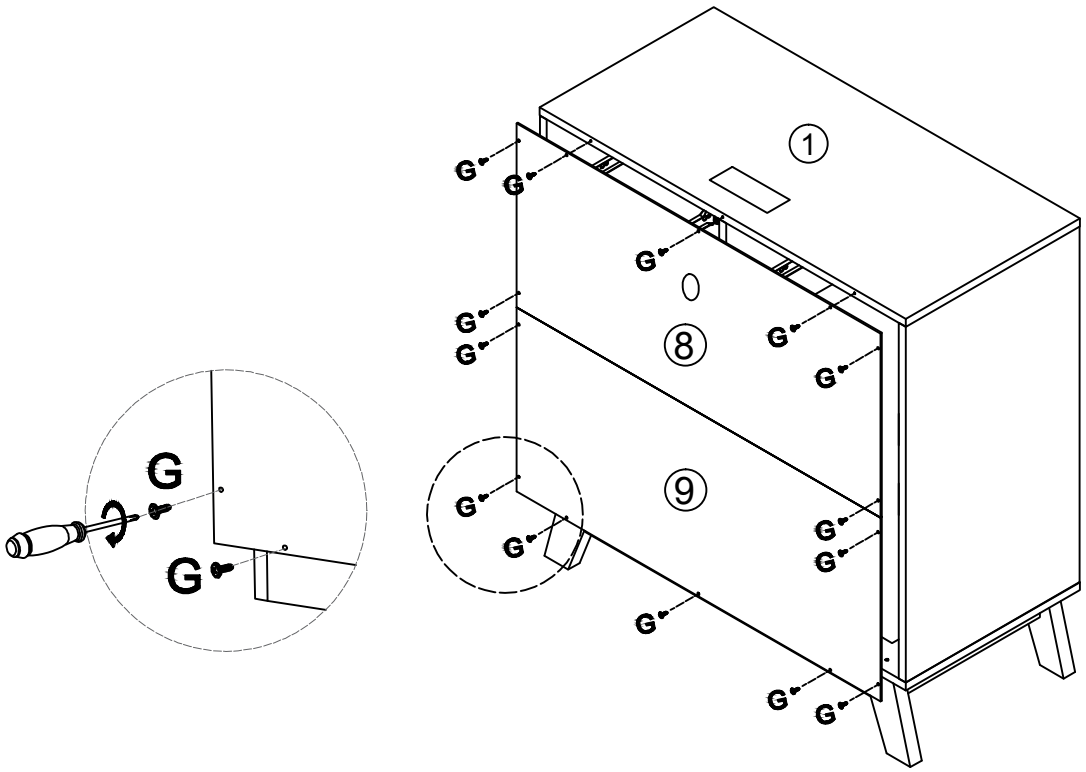

For product support or inguiries, please reach out to us at **harpaqservice@gmail.com**

Step 12

F X 2
Ø3 x 12mm

J X 1

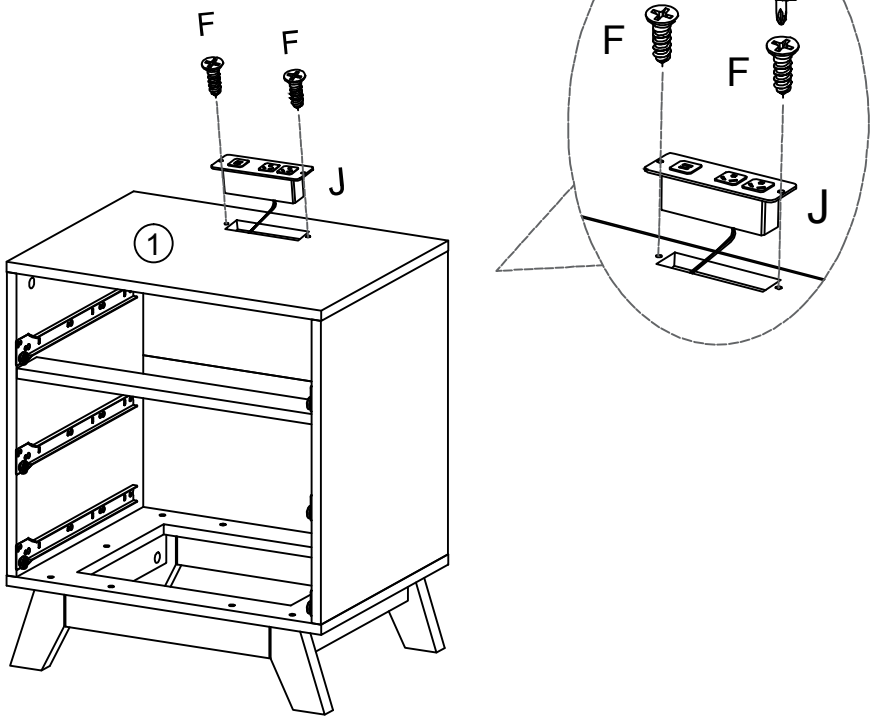

For product support or inguiries, please reach out to us at **harpaqservice@gmail.com**

Step 13

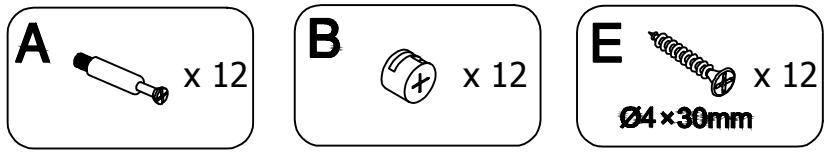

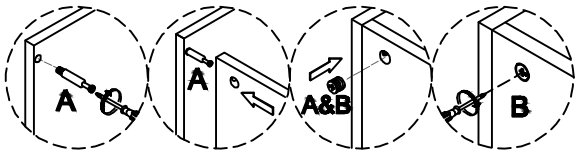

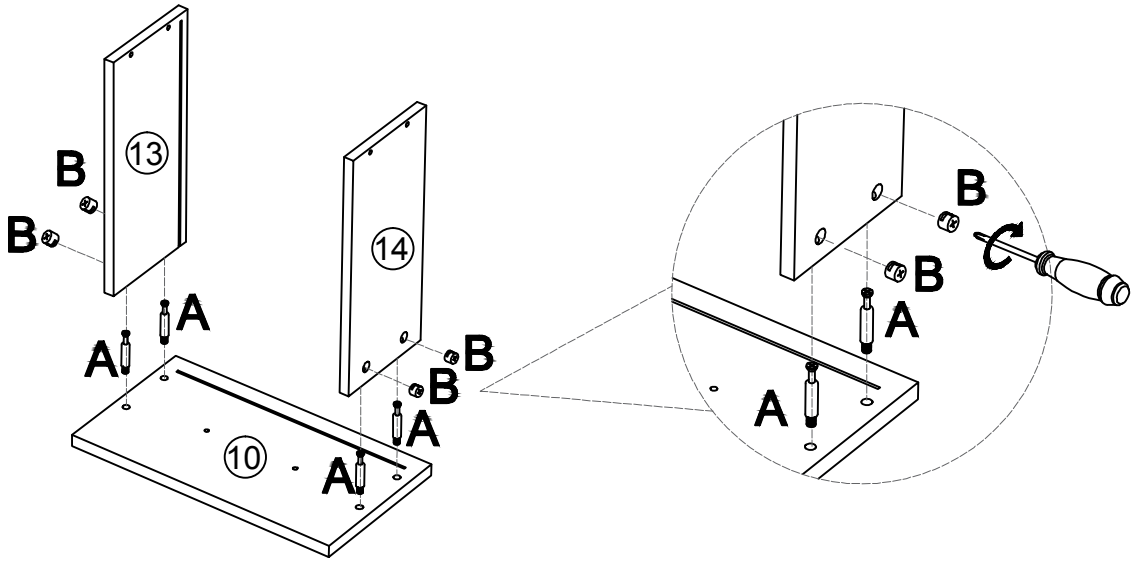

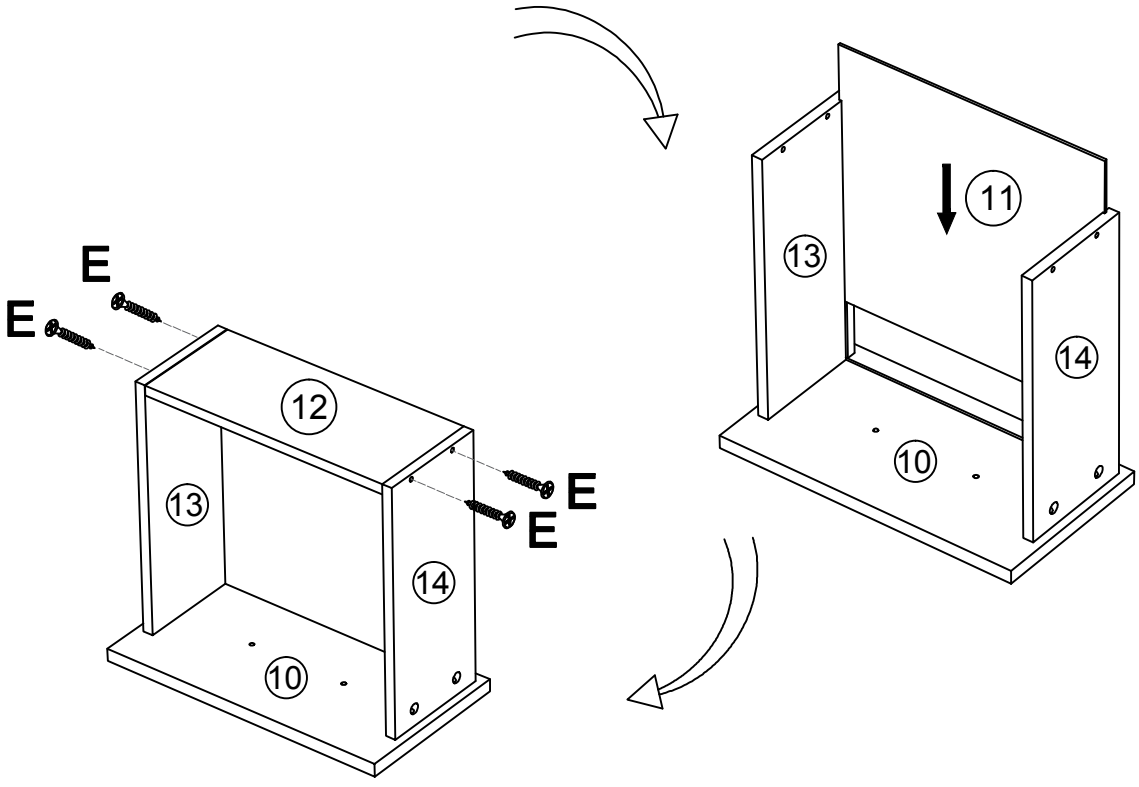

x 3

For product support or inguiries, please reach out to us at **harpaqservice@gmail.com**

Step 14

F x 18
Ø3.5 x 12mm

I x 3

M DR DL x 3

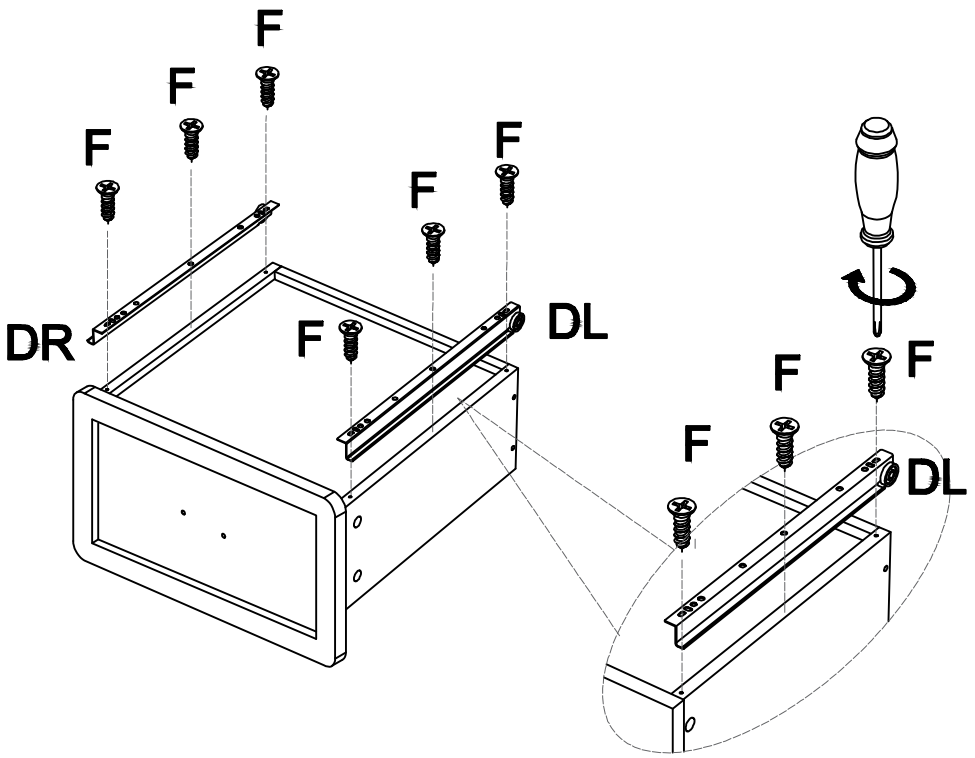

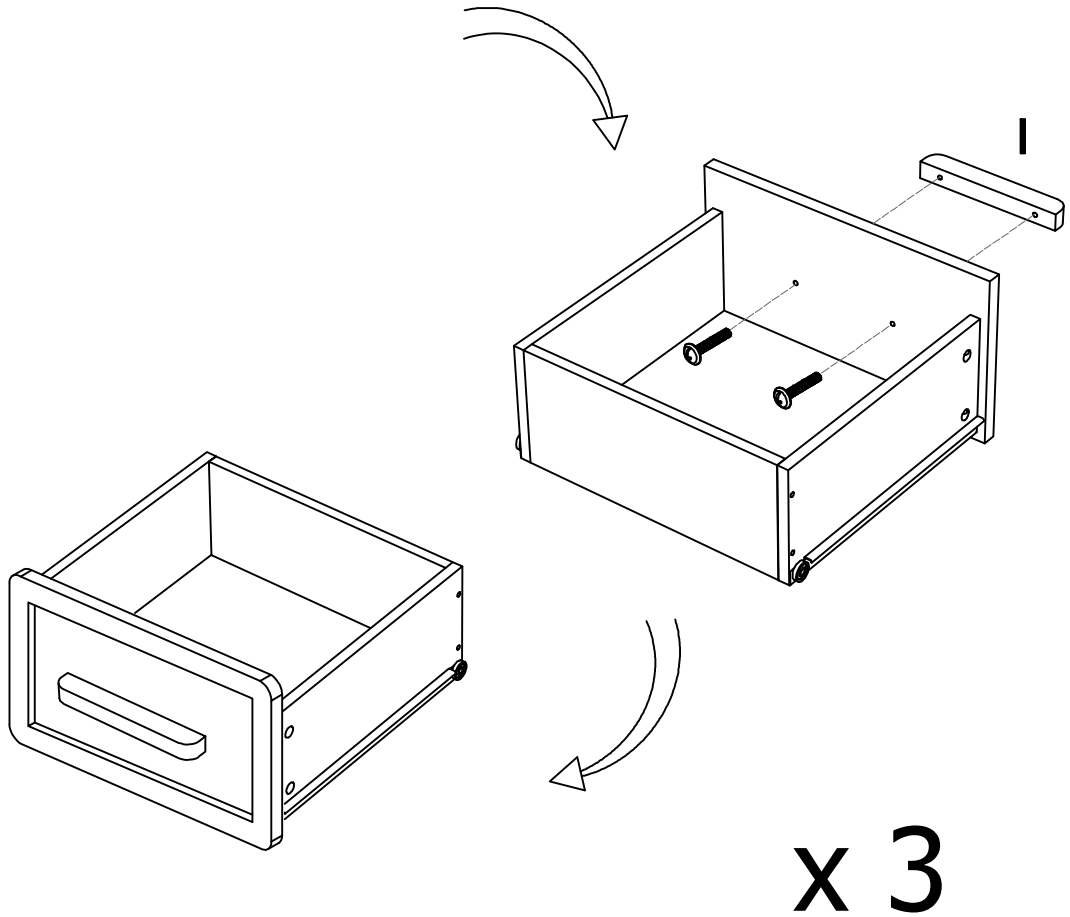

Step 15

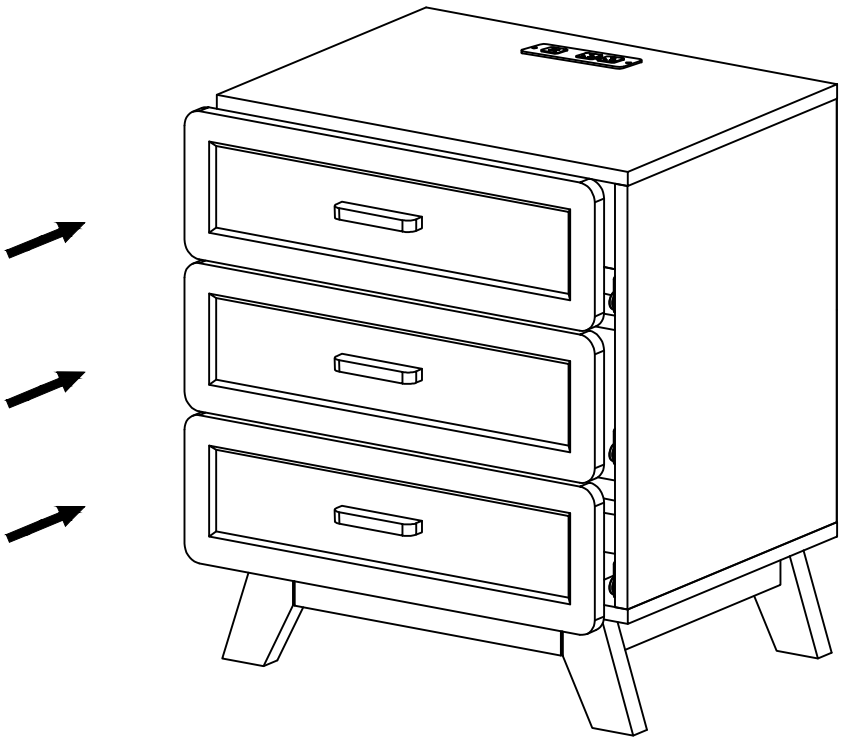

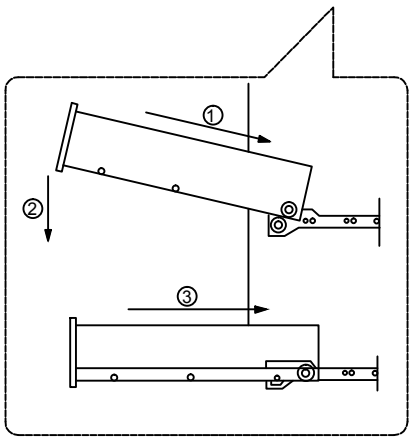

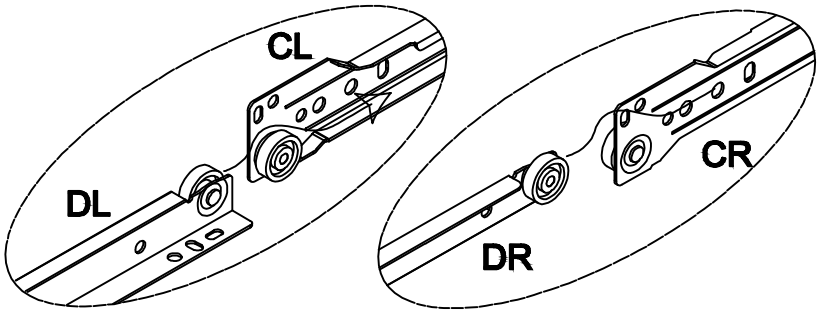

For product support or inguiries, please reach out to us at **harpaqservice@gmail.com**