LARMACE

ASSEMBLY INSTRUCTIONS
B016-LM13 KING
A0731 KING

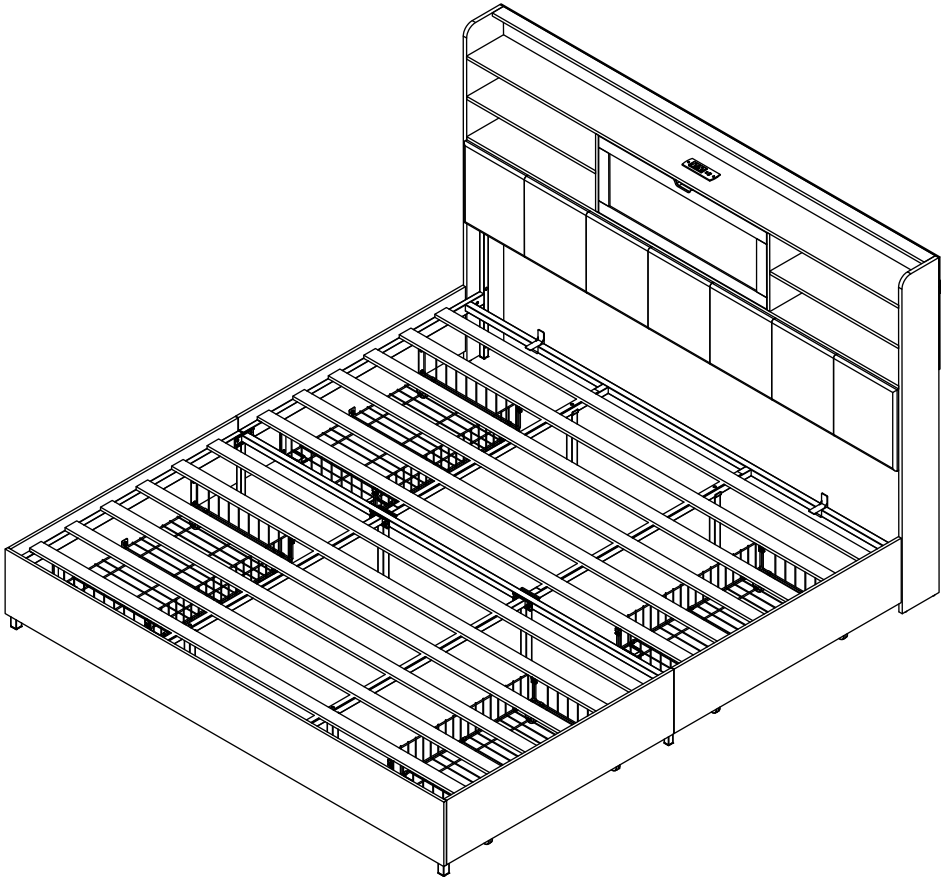

Dear Customer :

Thanks a lot for choosing our product. Please read each step carefully. It's very important that each step of the instructions is performed in the correct order. If these steps are not followed in sequence, assembly difficulties will occur.

Contact us
E-mail: support@larmace.com

NOTICE:

-Please retain these instructions for future reference

-Please read the instruction sheets completely befor eassembly. Remove all parts from the carton and ensure all components are included before assembly.

-Assemble the bed on a protected surface to avoid scratching the components of the bed.Be careful not to cross-thread screws. Please use a piece of the cardboard packaging to protect your floor and product.

-Two people are recommended for assembly!

-Don't tighten all screws before you have installed all the parts of the bed.

-When you assemble your bed, if you smell a weird smell of the material, please don't worry it's very Normal. What you should do is to air it for 1or 2 days on your balcony, patio,or near your window.Our bed have been certified by the environment authority. So please don't worry it won't hurt your health, it's completely safe.

NOTICE:

RETURN/DAMAGE CLAIM INSTRUCTIONS:

-If the package is damaged, please contact us as soon aspossible and attach the damaged photo.

-Return Policy: This item can be returned within 30 days without any reason. If you return this item for personal reasons, you need to bear the freight of returns and order processing fee (0-50% restocking fee based on the invoice price). If the product has quality issues (not caused by humans), we will bear the freight.

-If you need to return the goods, please keep the original box.Please make sure to use the return label provided by us and do not return it without permission. Please do not share a label with multiple boxes.

-If you return the product after 30 days from receiving it, we are afraid that your return application won't be appreciate. We appreciate your understanding.

-The warranty product is one year. If this item is damaged within the warranty period we will arrange you the replacement parts free of charge. If the item is damaged for some personal reasons, we could also replace it for you, however you need to bear the transport fees.

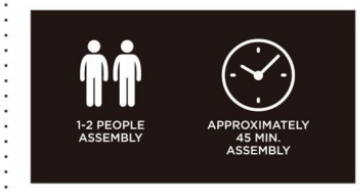

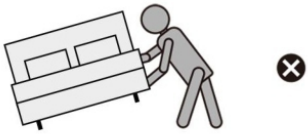

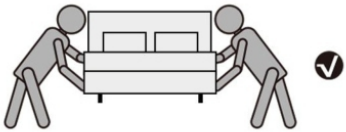

GENERAL ASSEMBLY GUIDELINES

Before your insallation, please make sure that you have all the parts listed on the manual. If you find something missing, stop installing and contact your supplier immediately.

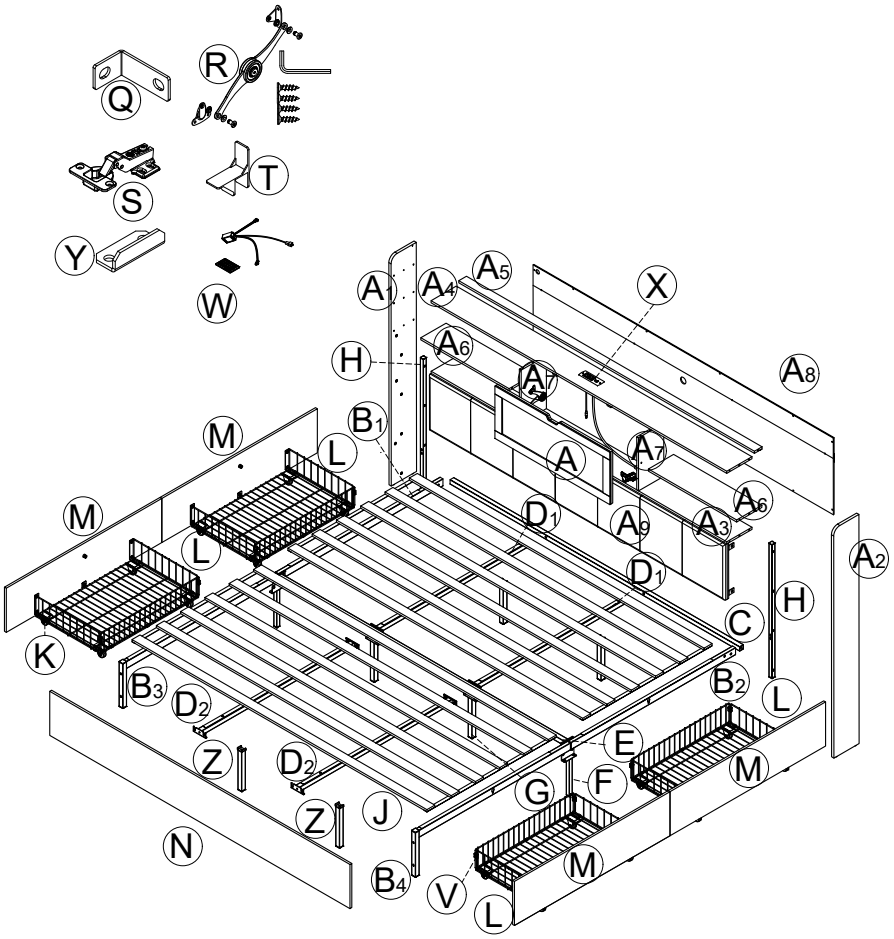

LARMACE

Tips:

- Don't tighten the screws one after another immediately until all screws are lined up with holes. Leave some space for adjustment.
- Screws may be not lined up with the holes. However, if that happens, please loose the screws a little and then tighten them in a diagonal way again.
- If the product is uneven or unstable after assembly, please loosen the screws, and put strength on it to make sure that all the legs are at the same level. Go on assembling it .
- Remove all parts from the carton and place them on a protected surface or carpet.

How to use cam locks

Did you know?
Cam locks are used to join two panels together, usually the edge of one to the flat side of another.

First, your cam bolt (or cam pin) will need to be properly inserted into the flat side of the board.

Important Note: Only tighten the cam bolt until it is secure. Do not over-tighten.

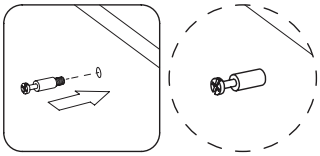

Next, you will notice the cam lock has a "C" shaped back. Commonly, an arrow on the front of the cam lock points in the same direction as the open section on back.

Using these as your cue, insert the cam lock into the large hole so the opening of the "C" fits over the head of the cam bolt.

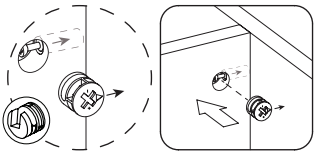

Next, you will fit the proper hole on the edge of the associated joining panel over the cam bolt.

Important Note: When installed properly, the head of the cam bolt will be visible through the larger hole on the side of the joining panel.

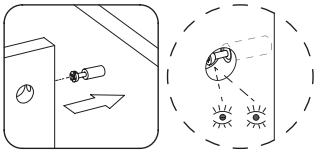

Using a screwdriver, you will turn the cam lock until it stops, usually at 90º or 180º. You will feel the panels pulling closer until they are secured.

Important Note: Only turn the cam lock until the panels are fully engaged & feel secure. Turning too far may lead to hardware failure.

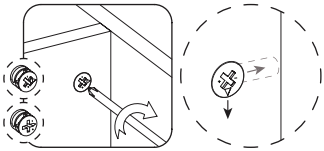

Still having issues?

If a cam lock seems to be spinning in place or is not "catching" or pulling the panels together as expected, first remove the cam lock & try again while making sure that everything is properly positoned & oriented.

If you are still having issues getting things working as expected, first remove the cam lock then unscrew the cam bolt slightly (less than 1 complete turn) to see if that helps with the alignment of the cam lock & bolt.

Hardware List 1

⚠ Pls make sure all the accessories are complete!

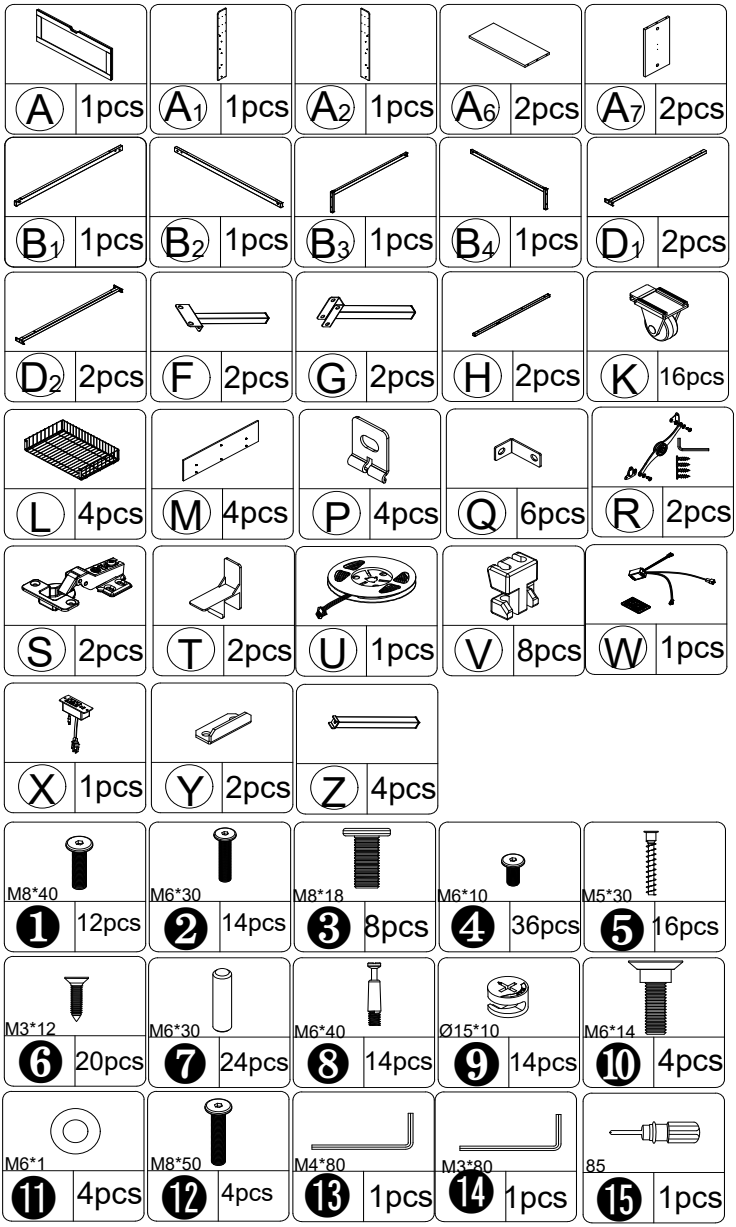

Hardware List 2

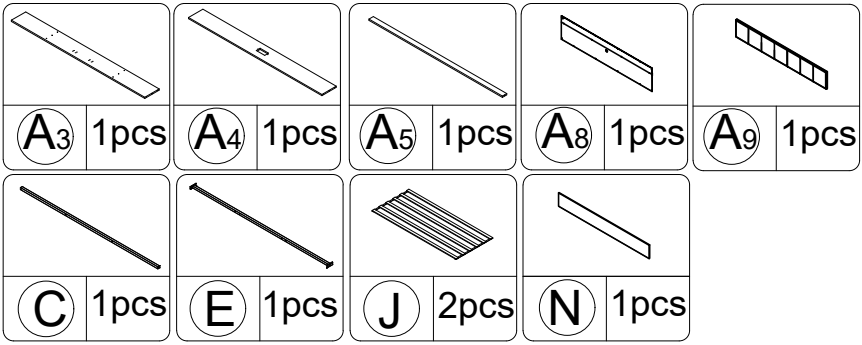

1

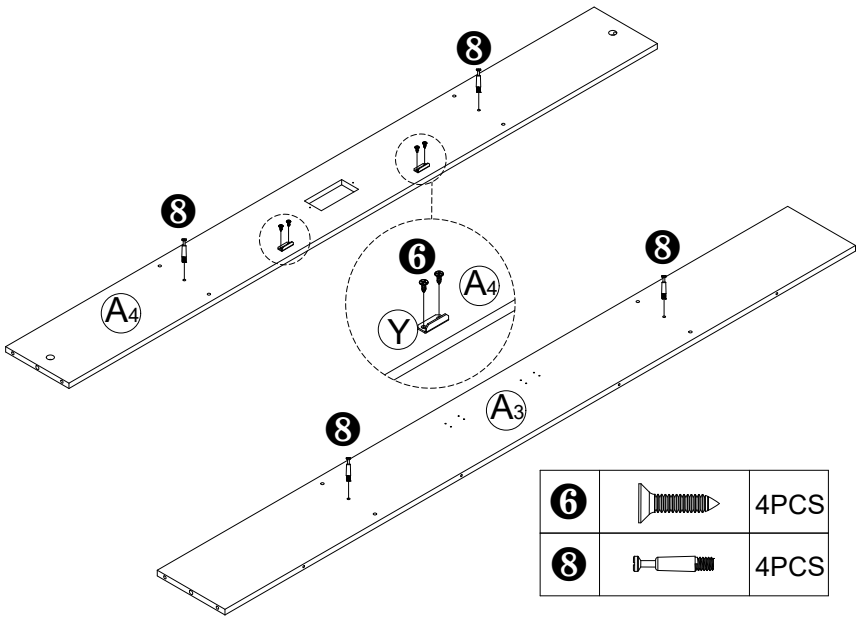

2

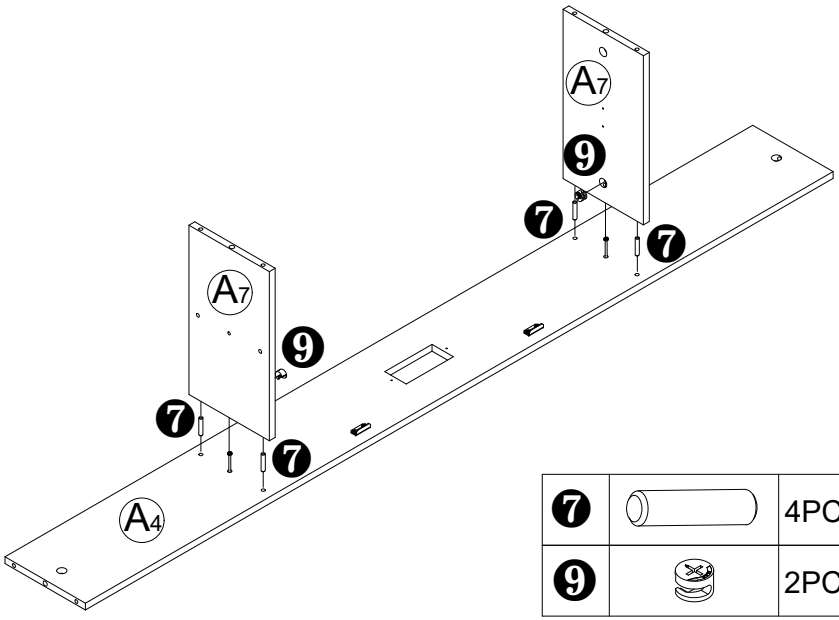

7		4PCS
9		2PCS

3

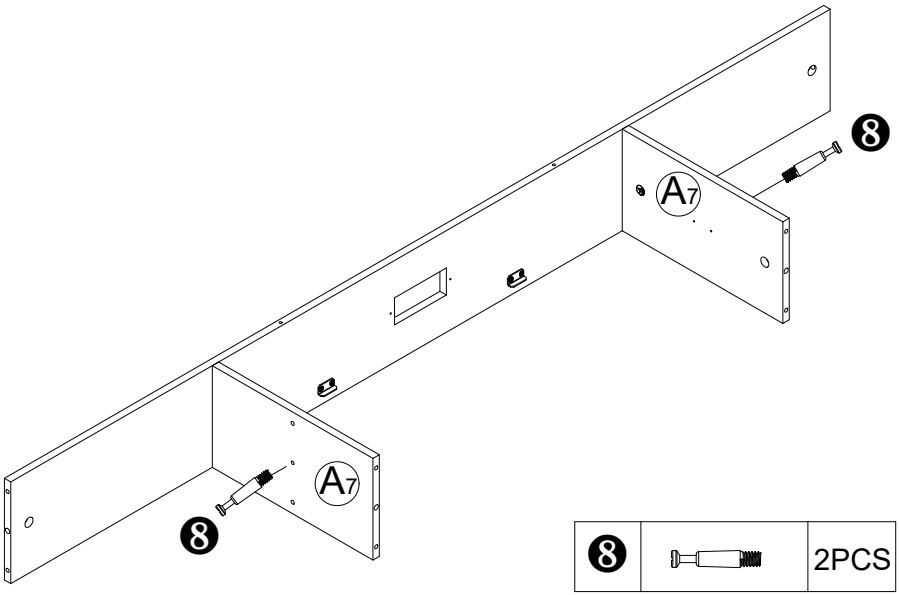

8		2PCS

4

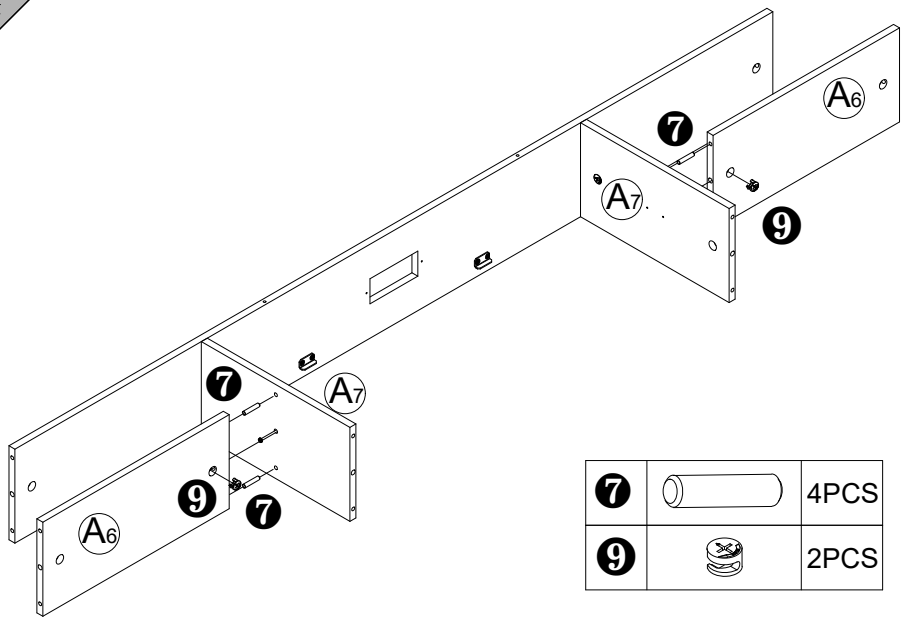

7		4PCS
9		2PCS

5

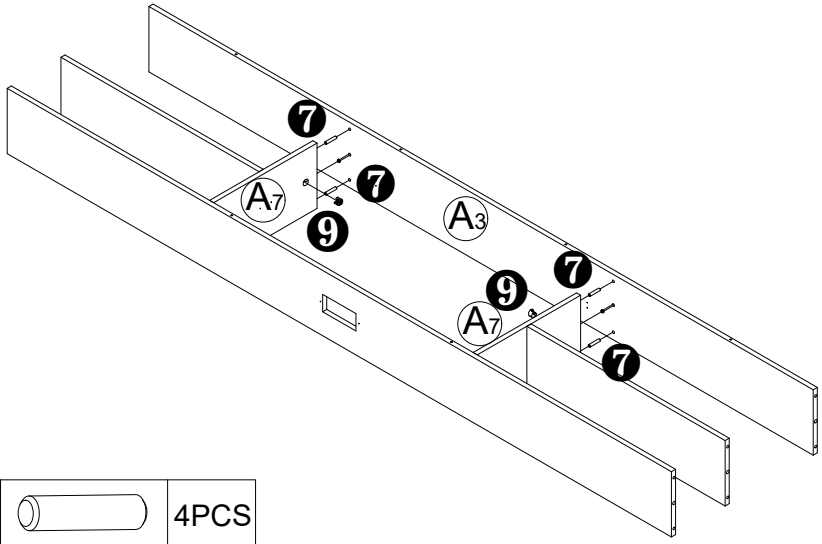

7		4PCS
9		2PCS

6

4 4PCS

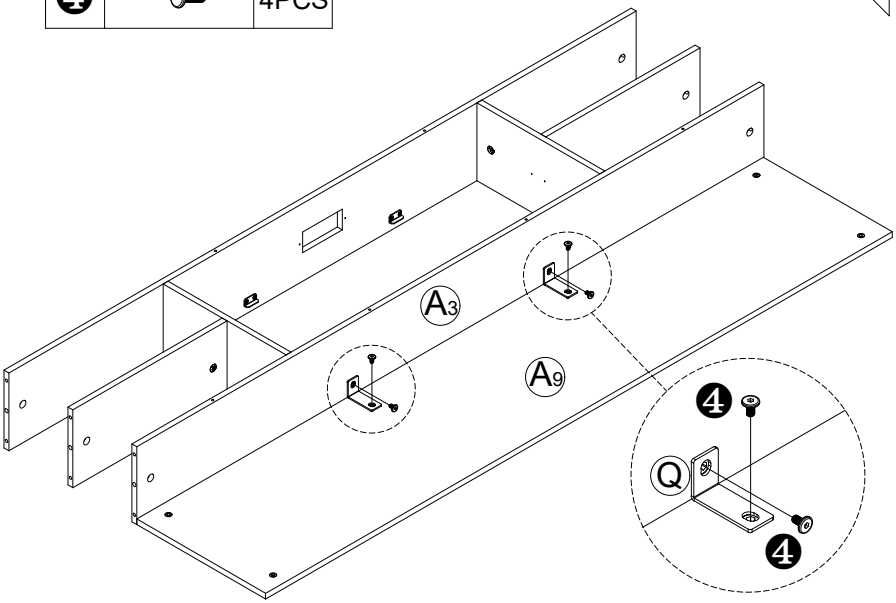

7

8 8PCS

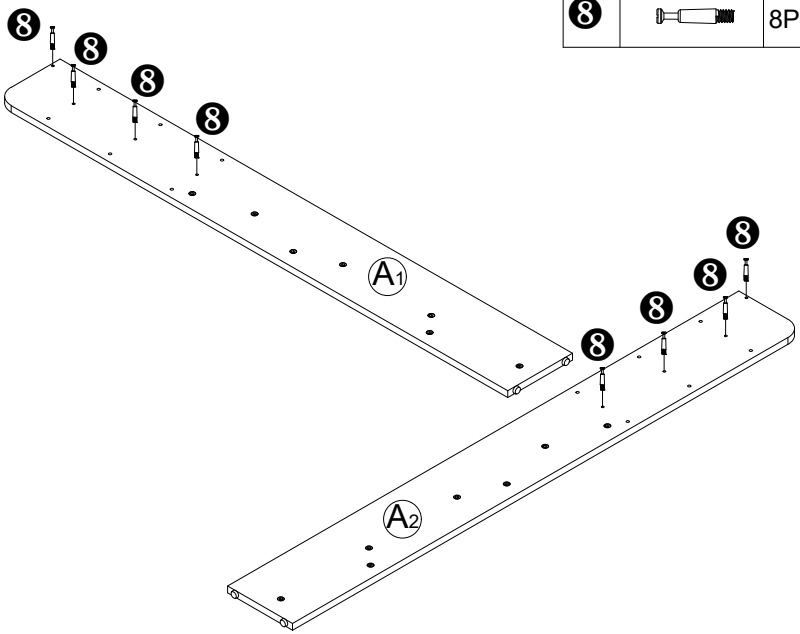

8

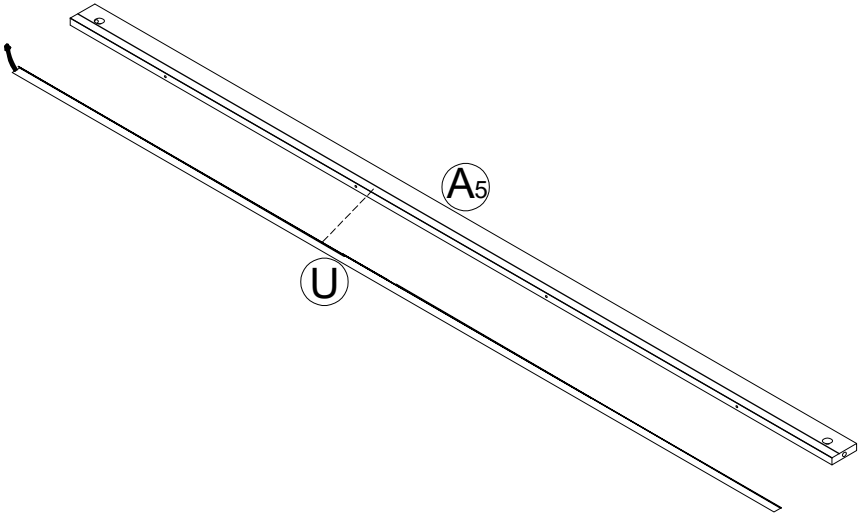

9

7		12PCS
9		8PCS

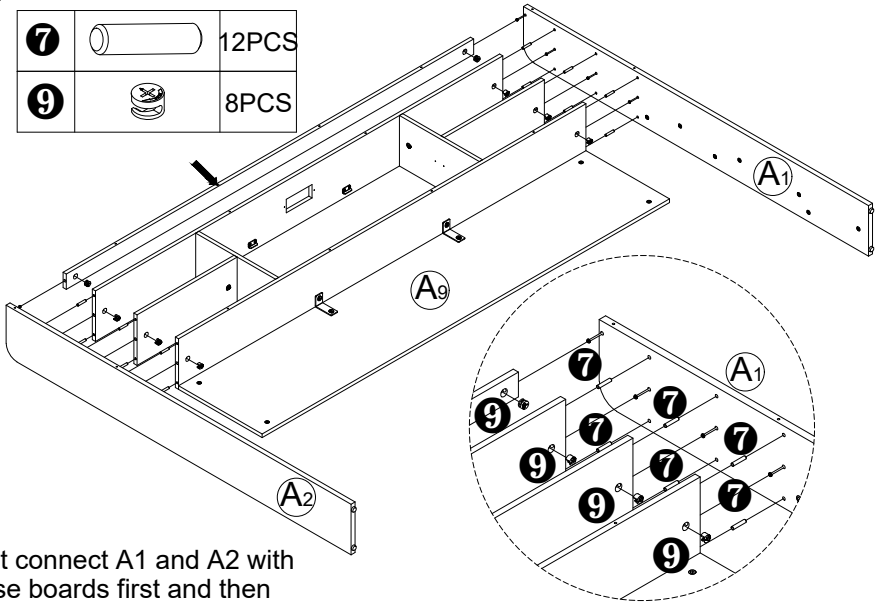

First connect A1 and A2 with those boards first and then fix them with two-in-one nuts.

10

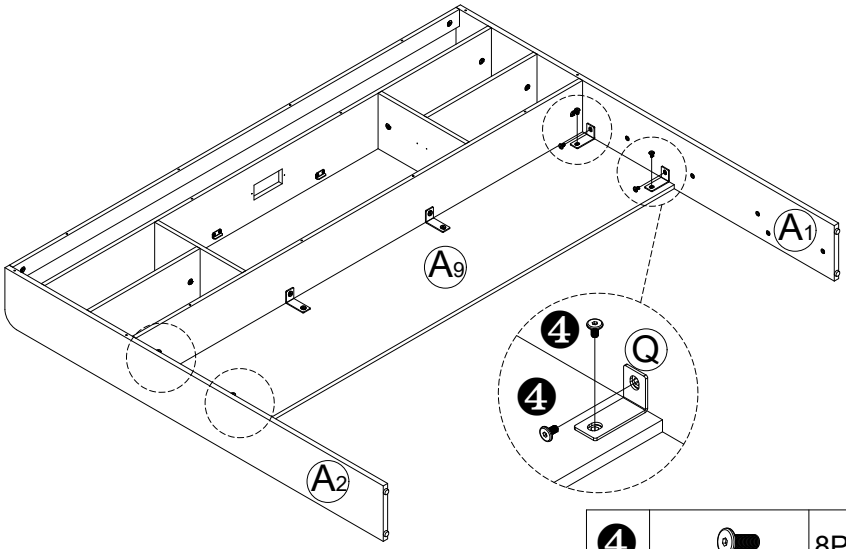

4		8PCS

11

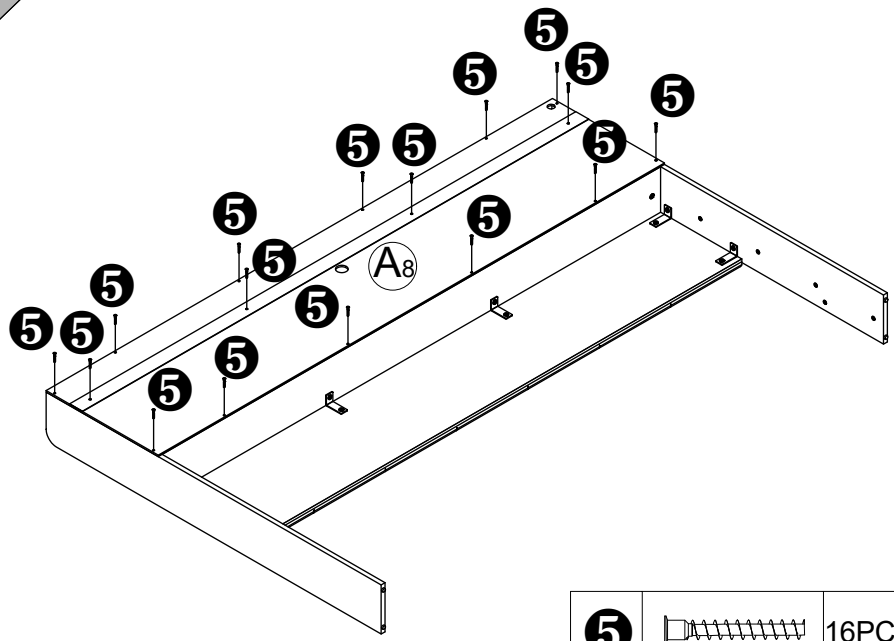

5		16PCS

12

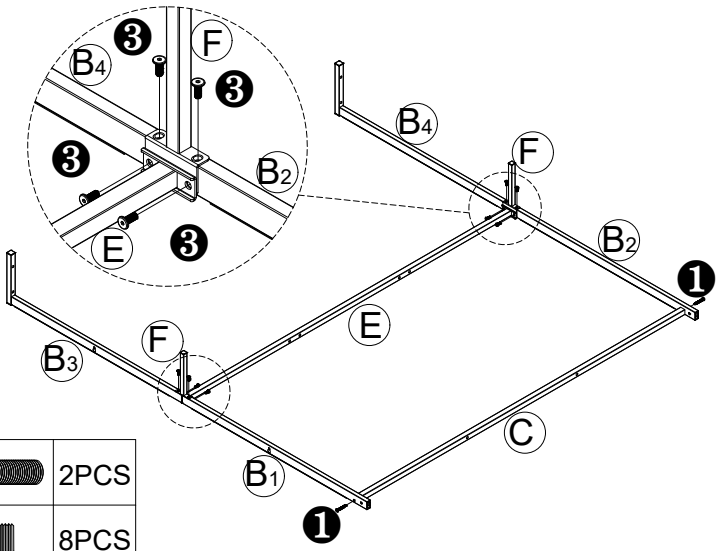

1	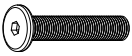	2PCS
3		8PCS

13

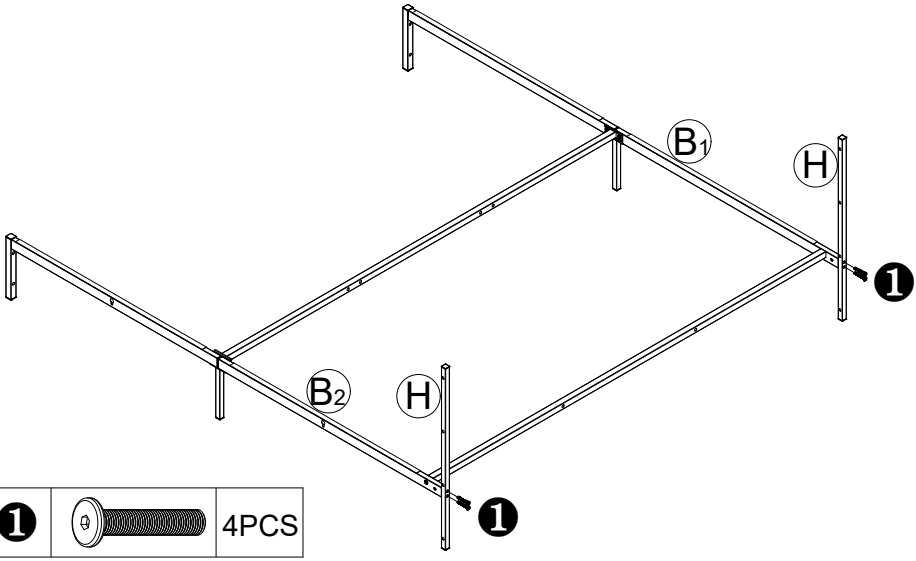

1		4PCS

14

Lift the head of the bed through the column tube before installing.

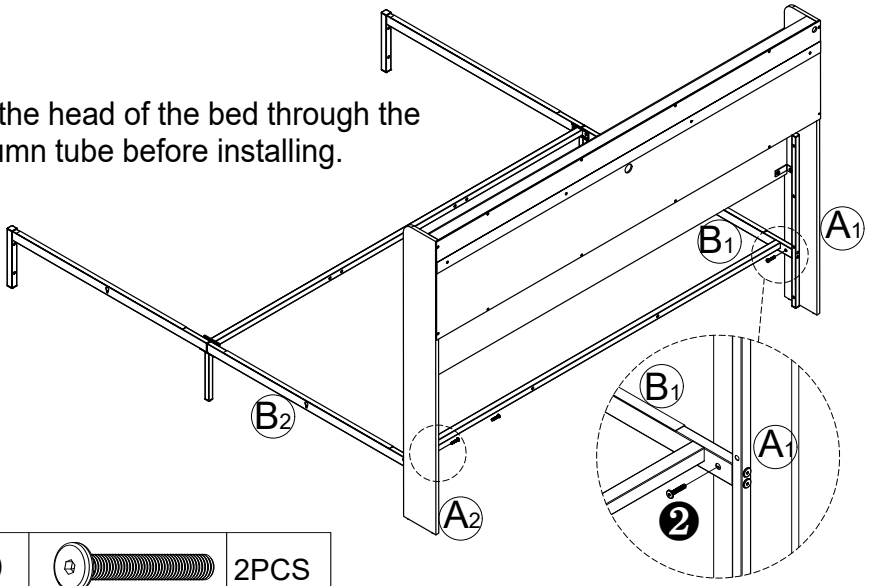

2		2PCS

15

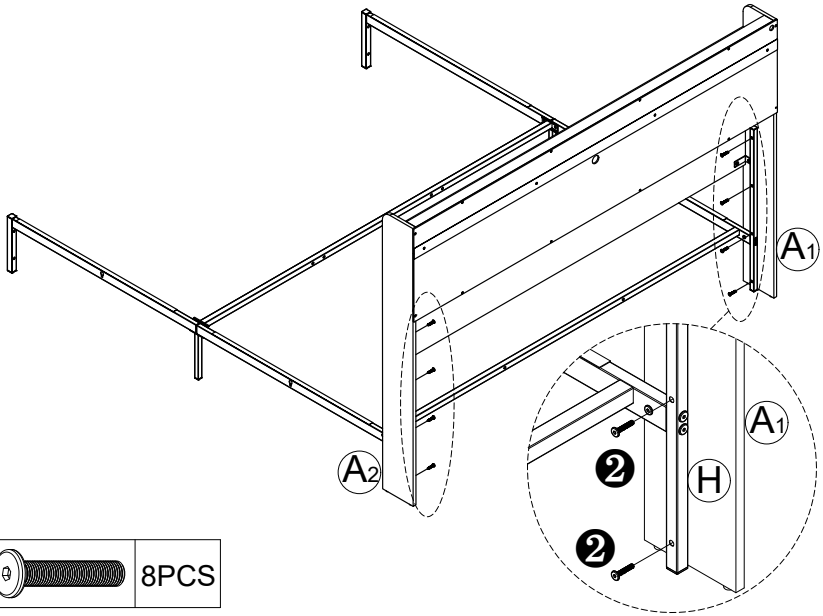

2		8PCS

16

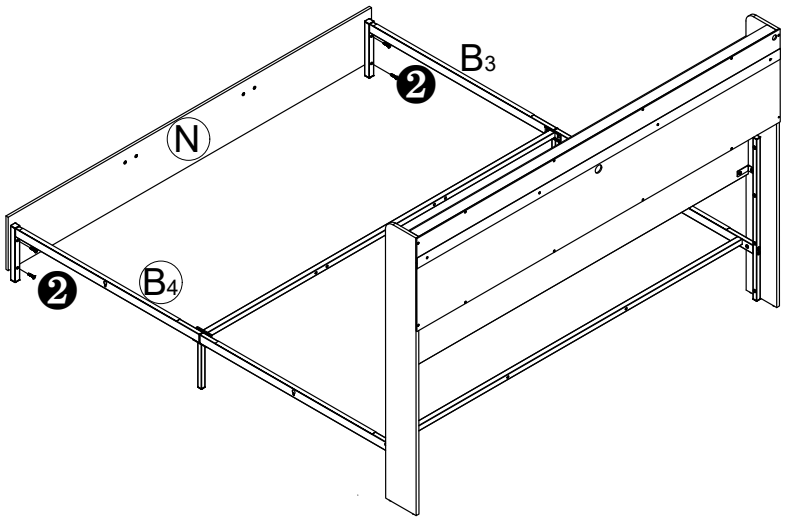

2	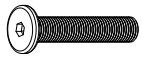	4PCS

17

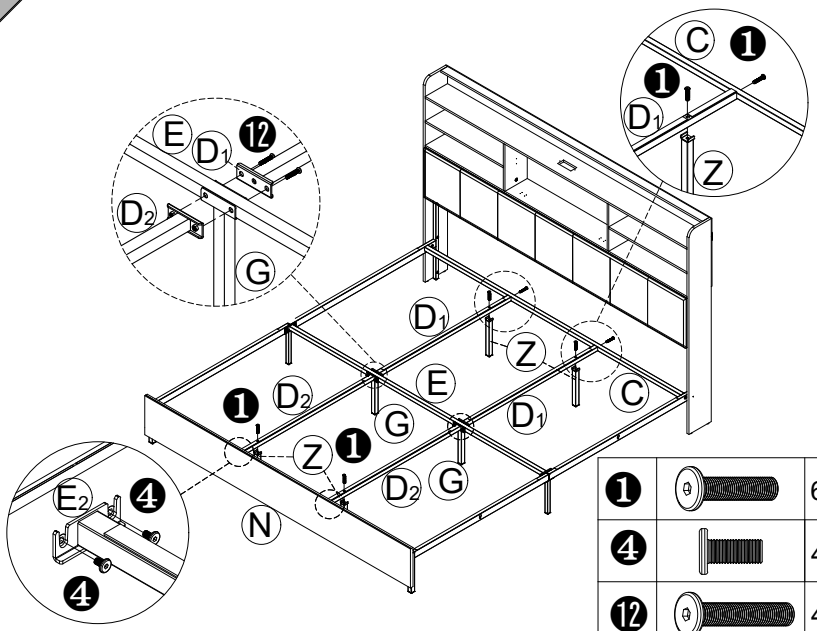

1		6PCS
4		4PCS
12		4PCS

18

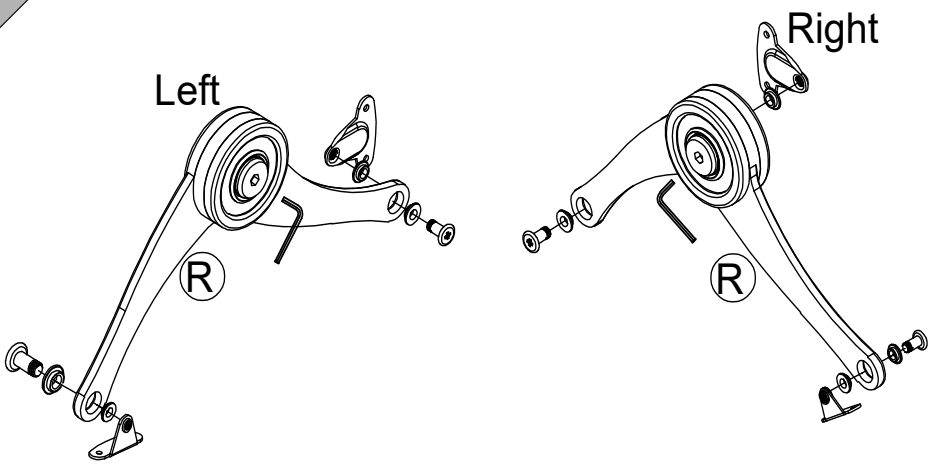

Tighten the screws with a wrench to achieve the effect of stopping at will.

19

When installing R, please use the screws provided by R component.

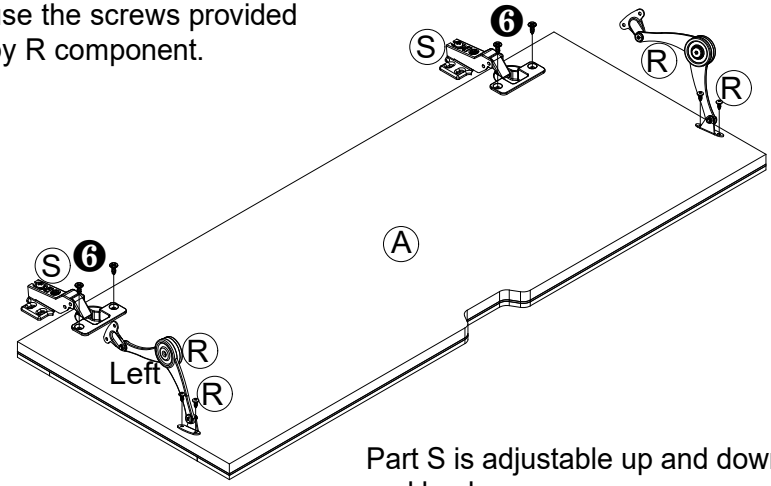

Part S is adjustable up and down, front and back.

6		4PCS

20

Left

When installing, please note that the shaft rotates upwards.

Right

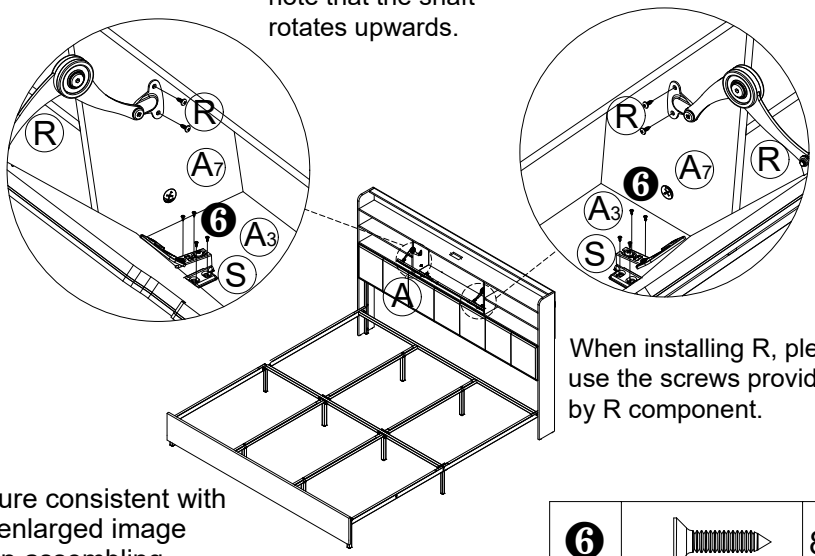

When installing R, please use the screws provided by R component.

Ensure consistent with the enlarged image when assembling.

6		8PCS

21

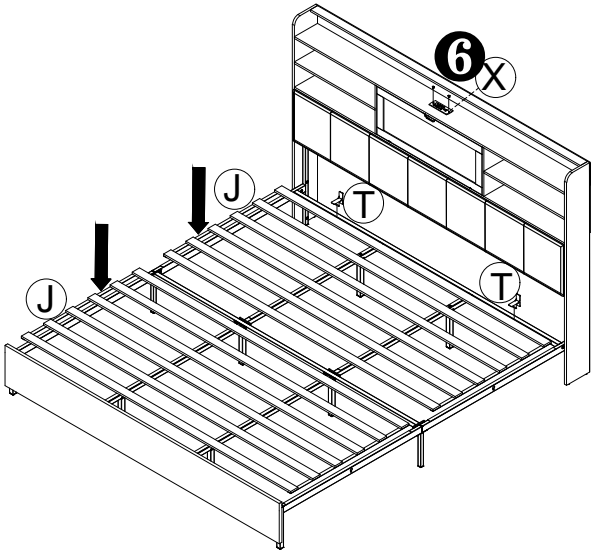

6	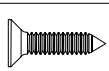	2PCS

22

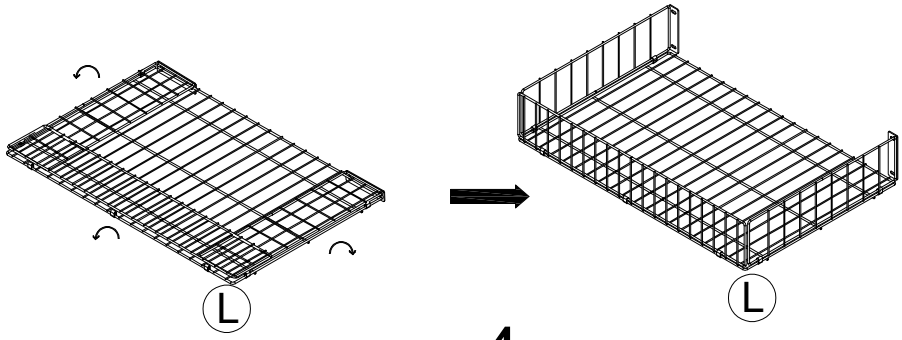

x4

23

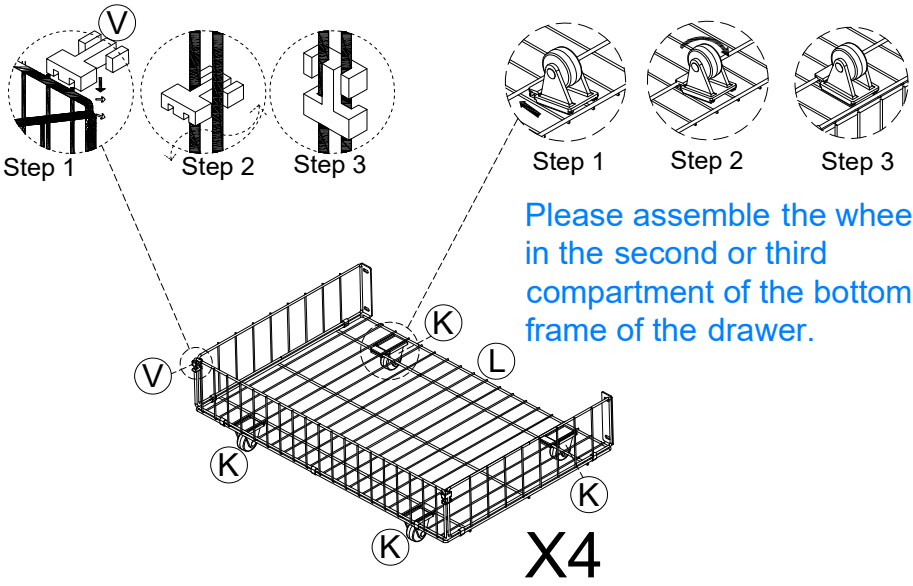

Please assemble the wheel in the second or third compartment of the bottom frame of the drawer.

X4

24

4		20PCS
10		4PCS
11		4PCS

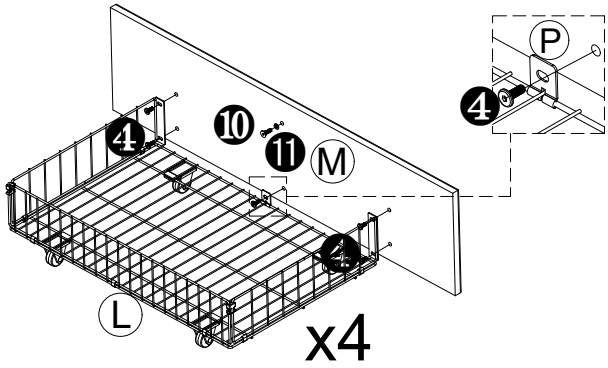

25

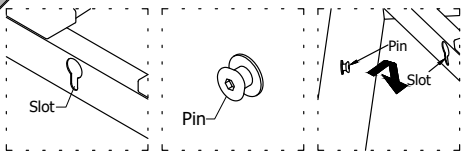

26

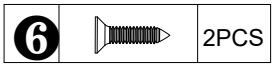

If necessary, you can install W in your favorite position.

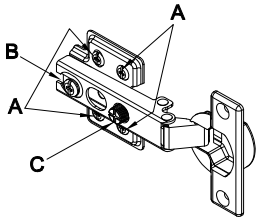

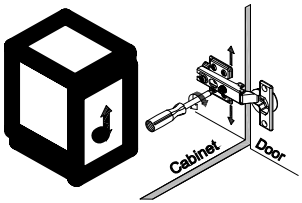

To adjust the vertical height.
Loosen the four screws "A" on both hinges. Two of them are usually in slotted holes which allows you to adjust up or down by a few mm. Then tighten back up.

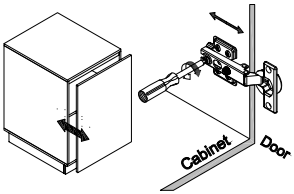

To adjust depth.
Loosen screw "B" and adjust door, if the door can not be adjusted, please loosen screw "C", then try again. Tighten screw "B" and "C".

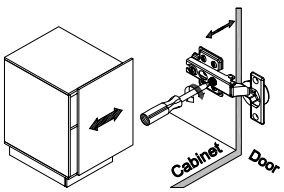

To adjust side ways.
Turning the screw "C" on BOTH hinges on each door.

LIMITED WARRANTY

Our team would like to improve the quality of the customer service and make your experience as easy and smooth as possible.

Return Policy: This item could be returned within 30 days without any major reason. After we receive the returned item, we would check it and make sure that is not damaged then we will process the refund. For more details, please remember to check the above terms of RETURN/DAMAGE CLAIM INSTRUCTIONS.

The warranty product is one year from the date of your purchase. If this item is damaged with in the warranty period,we will arrange for you the replacement parts free of charge. If the item is damaged for some personal reasons, we could also replace it for you, however, you would need to bear the cost of the replacementparts and shipping fees.

The exceptions or exclusions to this warranty are as follows:

1.Any warranty claim that is submitted after the limited warranty period won't be taken into consideration.We wouldn't be able to replace the item for you even at your cost.

2.This warranty does not include the products which have been purchased by mistake.

In the case of having some defect in the material or handiwork that are covered by this item's warranty, we will repair or replace it for you without charging you any cost within a reasonable period of time. We reserve the damaged parts to be returned to us upon our request.

If you have any questions concerning this warranty, please contact the our Customer Service department by sending an email to support@larmace.com. Be prepared to provide your name,address, daytime phone number, the model and purchase order number of the product, date of the purchase, and the store where it was ordered. All of these information provided by you, will help us to track your order easily and solve your problem in the shortest time.

This warranty gives you specific rights, and you still possess other rights, which vary in terms of each case.

In the end, we hope you can enjoy our product wish you and you family have a great life.