waterpar

INSTALLATION INSTRUCTIONS

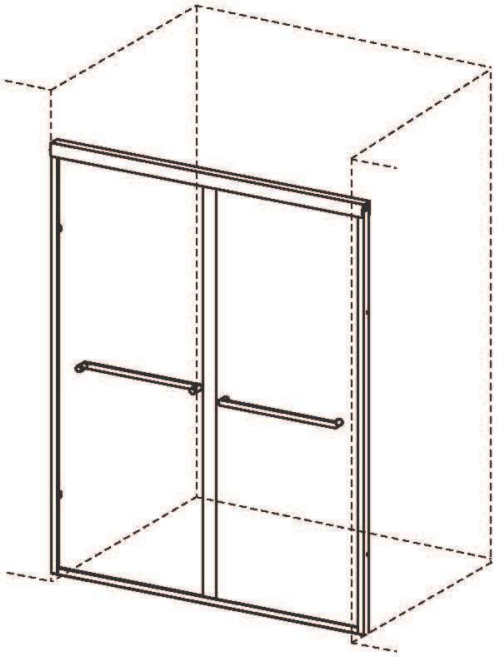

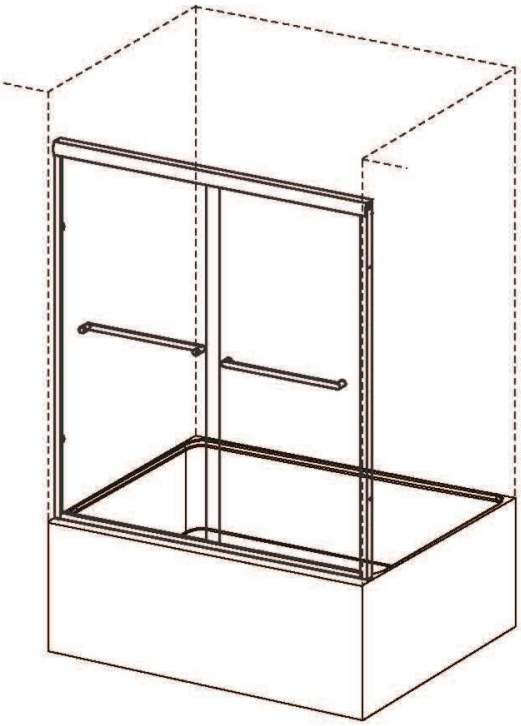

TK19118-4872BN	46"-48"x72"BN
TK19118-4872MB	46"-48"x72"MB
TK19118-4872CH	46"-48"x72"CH
TK19118-4872ORB	46"-48"x72"ORB
TK19118-5472BN	50"-54"x72"BN
TK19118-5472MB	50"-54"x72"MB
TK19118-5472CH	50"-54"x72"CH
TK19118-5472ORB	50"-54"x72"ORB
TK19118BN	56"-60"x72"BN
TK19118MB	56"-60"x72"MB
TK19118CH	56"-60"x72"CH
TK19118ORB	56"-60"x72"ORB

TK19118-6058BN	56"-60"x58"BN
TK19118-6058MB	56"-60"x58"MB
TK19118-6058CH	56"-60"x58"CH
TK19118-6058ORB	56"-60"x58"ORB

Customer service:

For more information about our products, please contact us below:

US:+1(909)929-2220 sales@waterpar.com

Do not return product to the store. Contact us directly with any questions.

01/06/24Rev.1.0

◆ Preparation

1. Prior to installation, examine all boxes and packages for shipping damage and compare the piece count with your packing slip. After opening all boxes and packages read this introduction carefully. Check that all of the needed parts are included in the package by checking off the components on the "Detailed Diagram of Shower Door Components". If the unit has been damaged, has a finishing defect, or has missing parts, please contact our customer support department within **3 business days** of the delivery date. Please note that we **will not replace any damaged products or missing parts free of charge after 3 business days or if the product has been installed.** Feel free to contact us if you have any questions, and please provide an order number, job name or other proof of purchase to help us identify your original order.

2. **Please note that you should consult your local building codes with questions about installation compliance standards. Building and plumbing codes may vary by location, and we are not responsible for code compliance standards for your project and will not accept any returns.**

3. If this unit is going to be installed in a new construction, please install all of the required plumbing and drainage before installing the shower. **Use a competent and licensed (if required by local code) plumber for all plumbing installation.**

4. Please make sure that prior to beginning the installation, the surfaces are leveled and solid and will be able to support the total weight of the unit. Also make sure the walls are at right angles. Irregular installation surface level, radius corners or improper angle of side walls will result in serious problems for your installation. Please, note that some adjustments and drilling may be necessary during the installation process.

5. Please protect all primary surfaces of the product during installation. **Never set your glass down directly onto a tile floor.** Leave corner protectors in place until necessary to remove them. Always use a piece of wood or cardboard to protect the bottom edge and corners of the glass prior to and during installation.

6. This unit must be installed upon a finished threshold and against finished walls.

7. This model has 4" of total width adjustment: including 1/2" of adjustment per wall profile for out-of-plumb wall conditions plus 3" of overall width adjustment with the expanding top and bottom rails. **Be sure that you have ordered the correct model size to fit your finished opening.**

8. **This model requires a minimum 1-3/8" of flat threshold space for installation.**

9. **Professional installation recommended.**

NOTE: This door is reversible for right or left-hand door installation. The right-hand door installation is shown as an example throughout this manual.

◆ General Information

Inspect the product immediately upon receipt for transit damage, missing packs/parts or manufacturing fault. Damage reported later will not be accepted. Handle the product with care avoiding knocks and shock loading to all sides and edges of the glass.

Notes: Safety glass can not be re-worked.

Read these instructions carefully before start of installation.
Special care should be taken when drilling walls to avoid hidden pipes or electrical cables.
Note: This product is heavy and may require two people to install.

Aftercare instructions

After use, your shower should be cleaned with soap and water. This is particularly important in hard water districts where insoluble lime salts maybe deposited and allowed to build up. Cleaners of a gritty or abrasive nature should not be used. Care should be taken to avoid contact with strong chemicals, they can be used but with caution, if in doubt contact the manufacturer of the cleaner in question.
Keep these instructions for aftercare and customer service details.

Tools Required

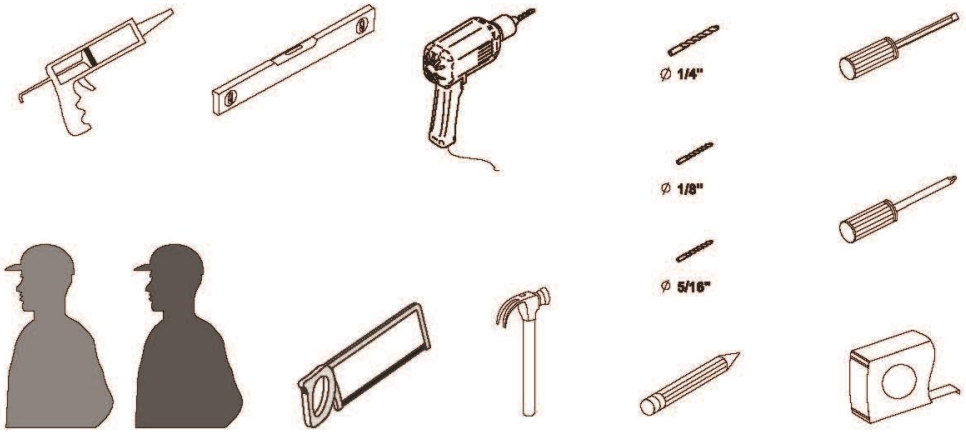

This product is heavy and may require two people to install.

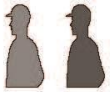

◆ Assembly Drawing

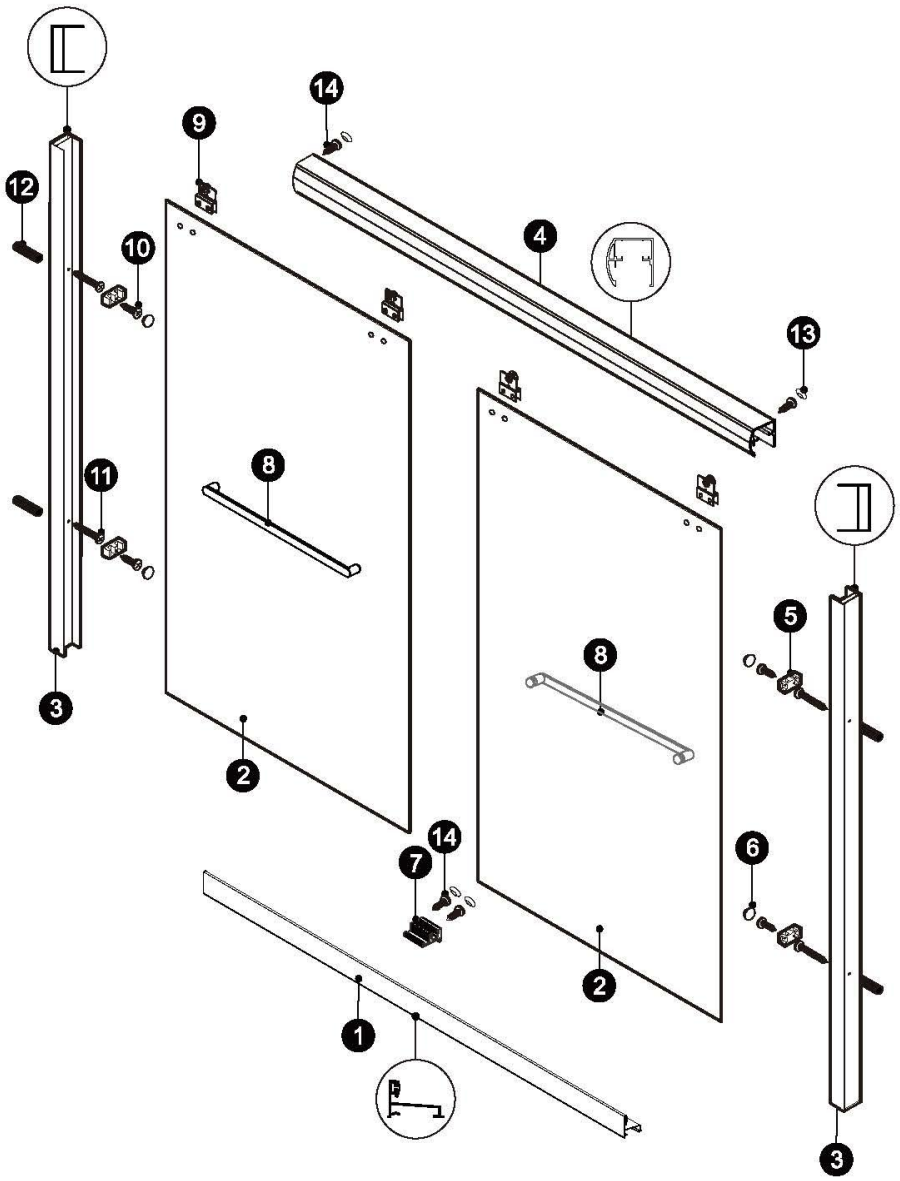

PACKING LIST

PART #	DESCRIPTION	Q'TY	PART #	DESCRIPTION	Q'TY
1	Bottom Horizontal Rail	1pc	9	Roller Bracket Assembly	4sets
2	Door Panels	2pcs	10	Screw ST4x5/8"	4pcs
3	Wall Jambs	2pcs	11	Screw ST4x1-9/16"	4pcs
4	Top Horizontal Rail	1pc	12	Wall Plugs	4pcs
5	Glass Blocks	4pcs	13	Screw Caps	4pcs
6	Glass Block Caps	4pcs	14	Screw ST4x5/16"	4pcs
7	Bottom Guides	1pc			
8	Towel Bar	2pcs			

INSTALLATION STEPS

Step 1

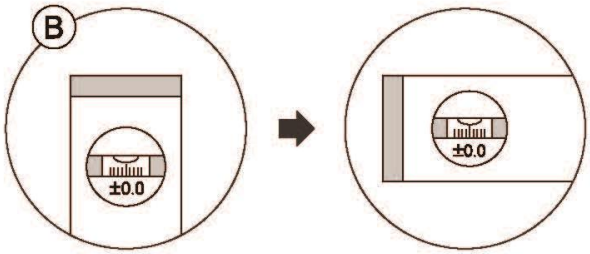

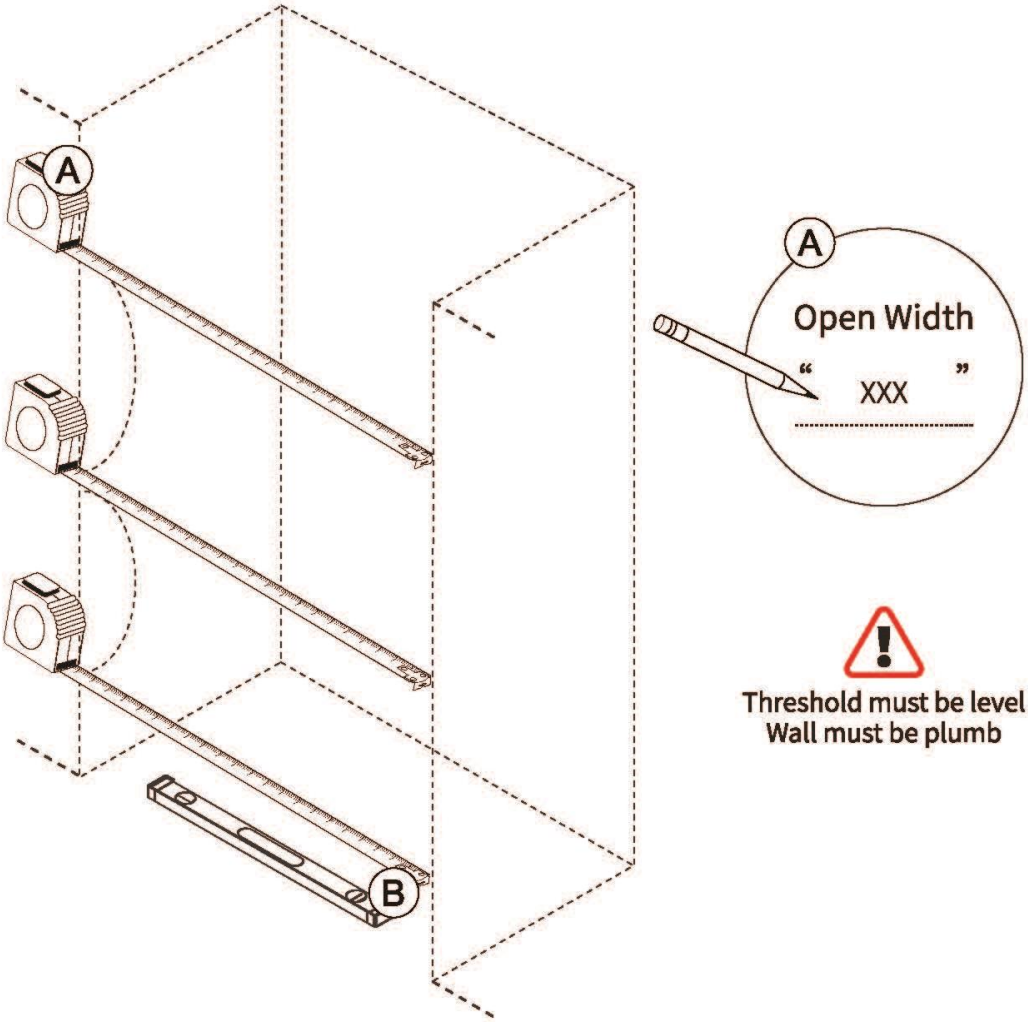

Step 2

Model Width - Finished Opening(Width) = Cut Off Length

Finished Opening (Width)			46"	47"	48"
Finished Opening (Width)	50"	51"	52"	53"	54"
Finished Opening (Width)	56"	57"	58"	59"	60"
Cut Off Length	4"	3"	2"	1"	

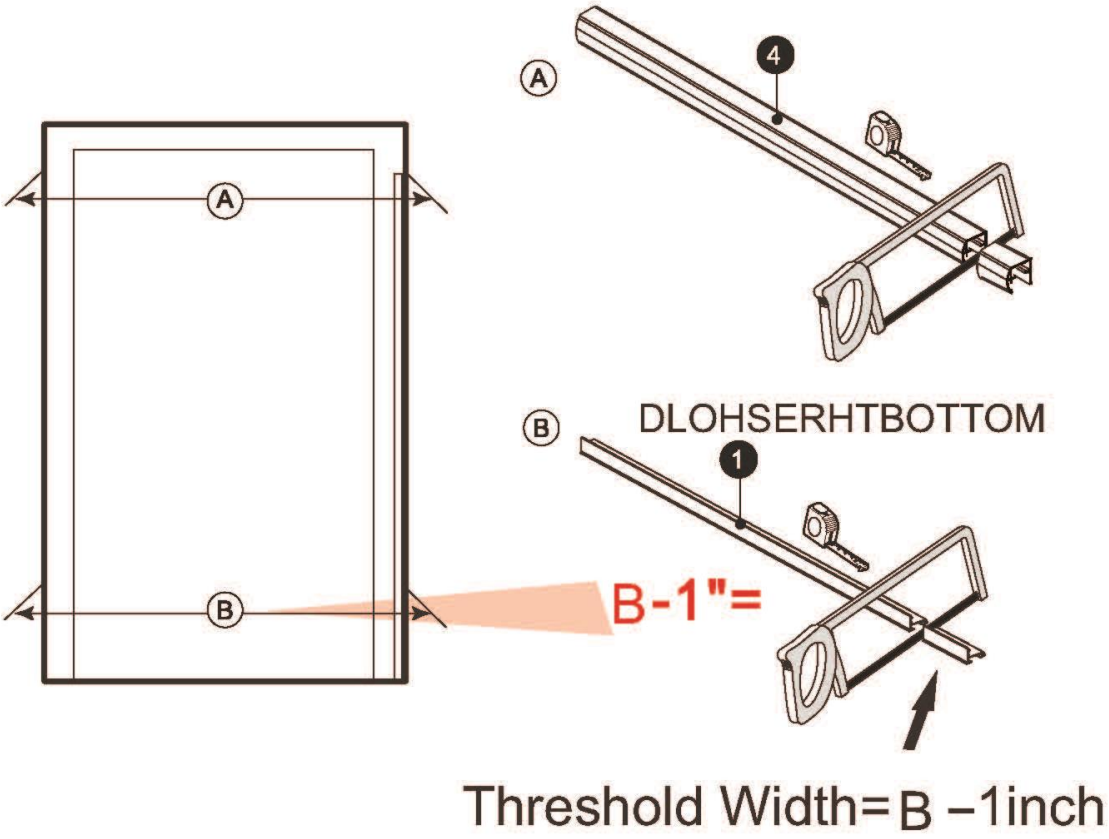

◆ Installation Steps

Step 1

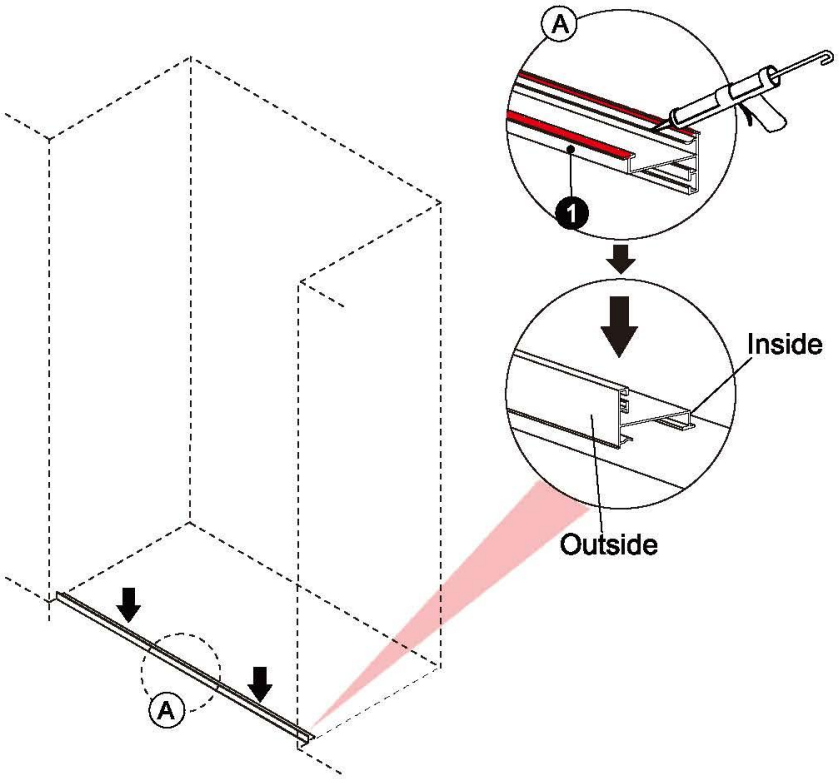

Step 2

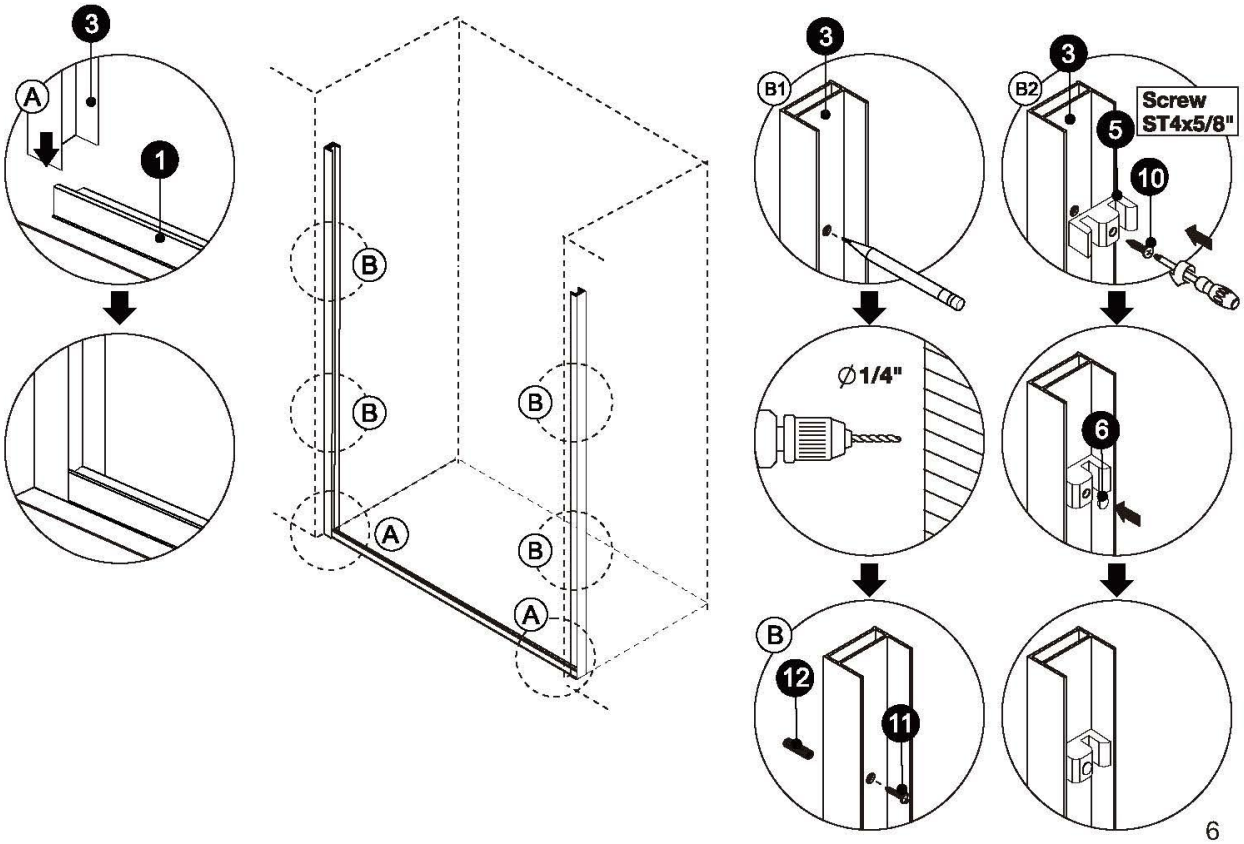

Step 3

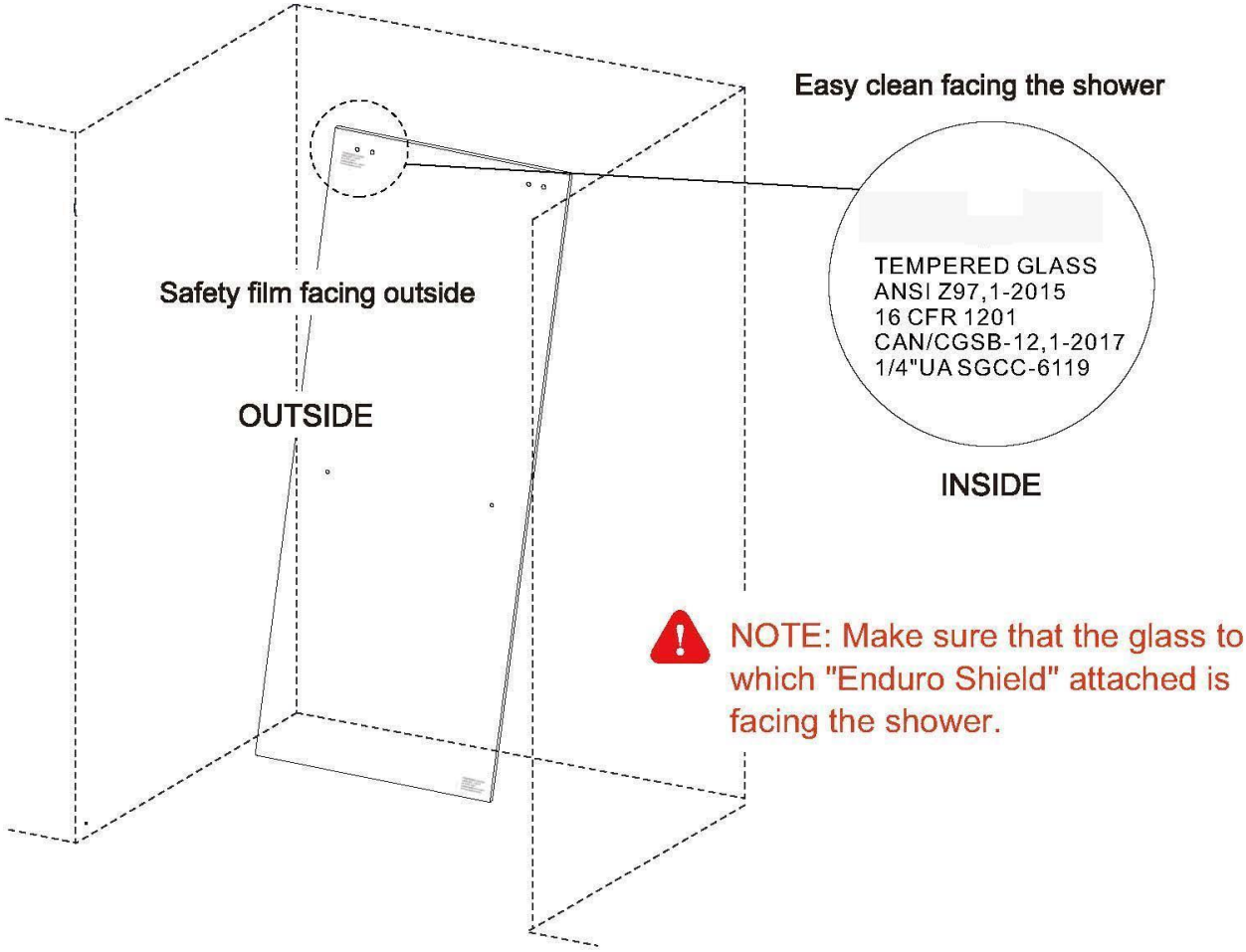

NOTE: Make sure that the glass to which "Enduro Shield" attached is facing the shower.

Step 4

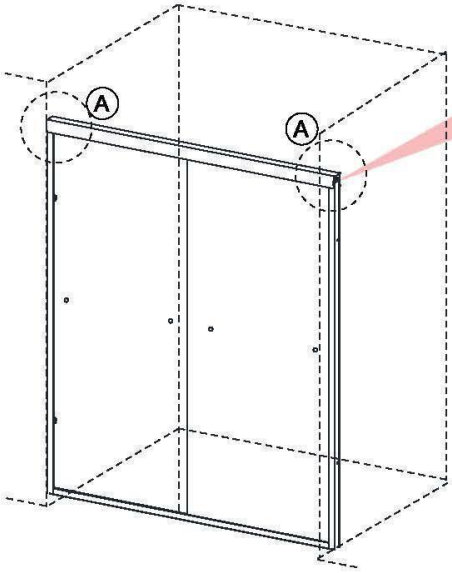

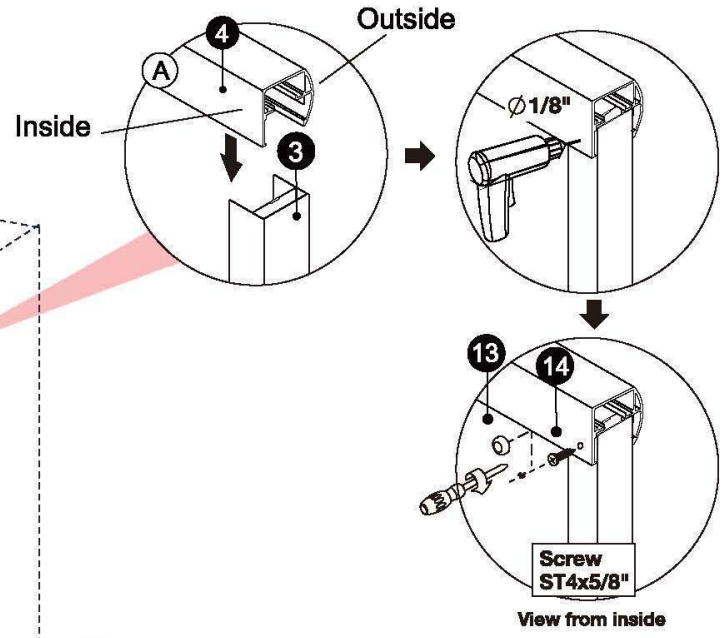

NOTE:Please install A first.

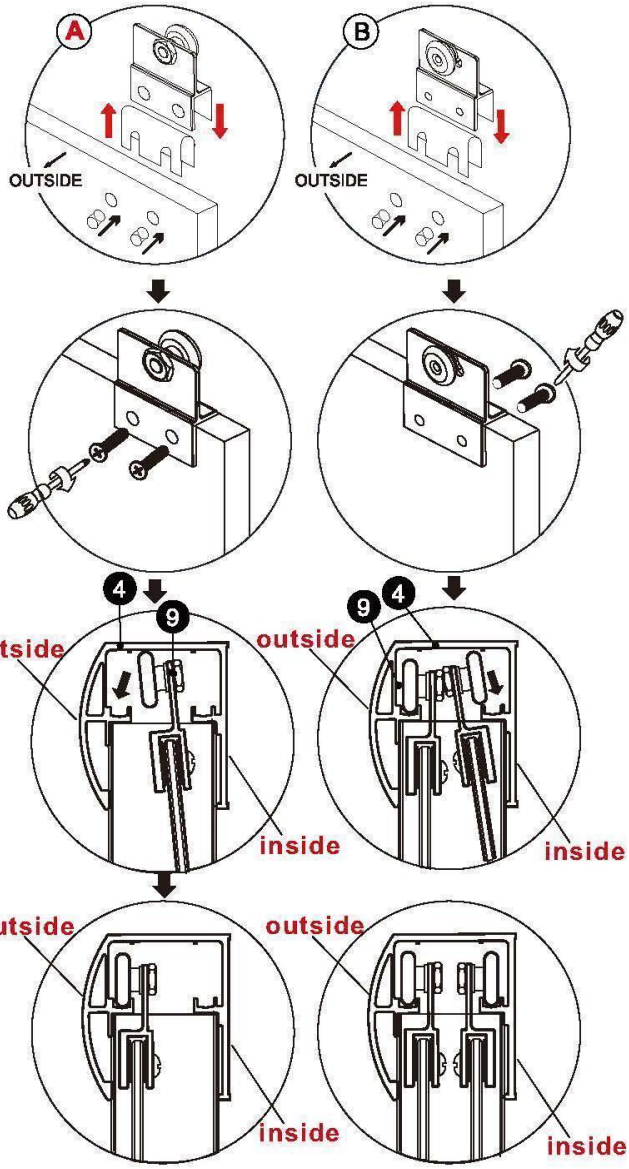

Step 5

Note: Waterpar ® logo side (easy-clean) faces inside the bathroom; outer side is protective film.

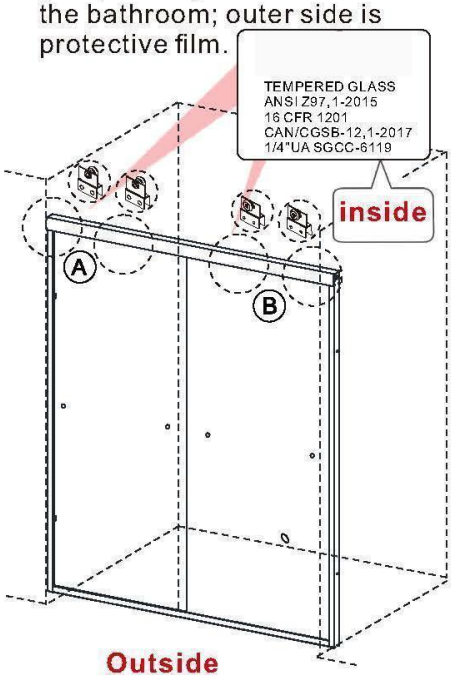

Step 6

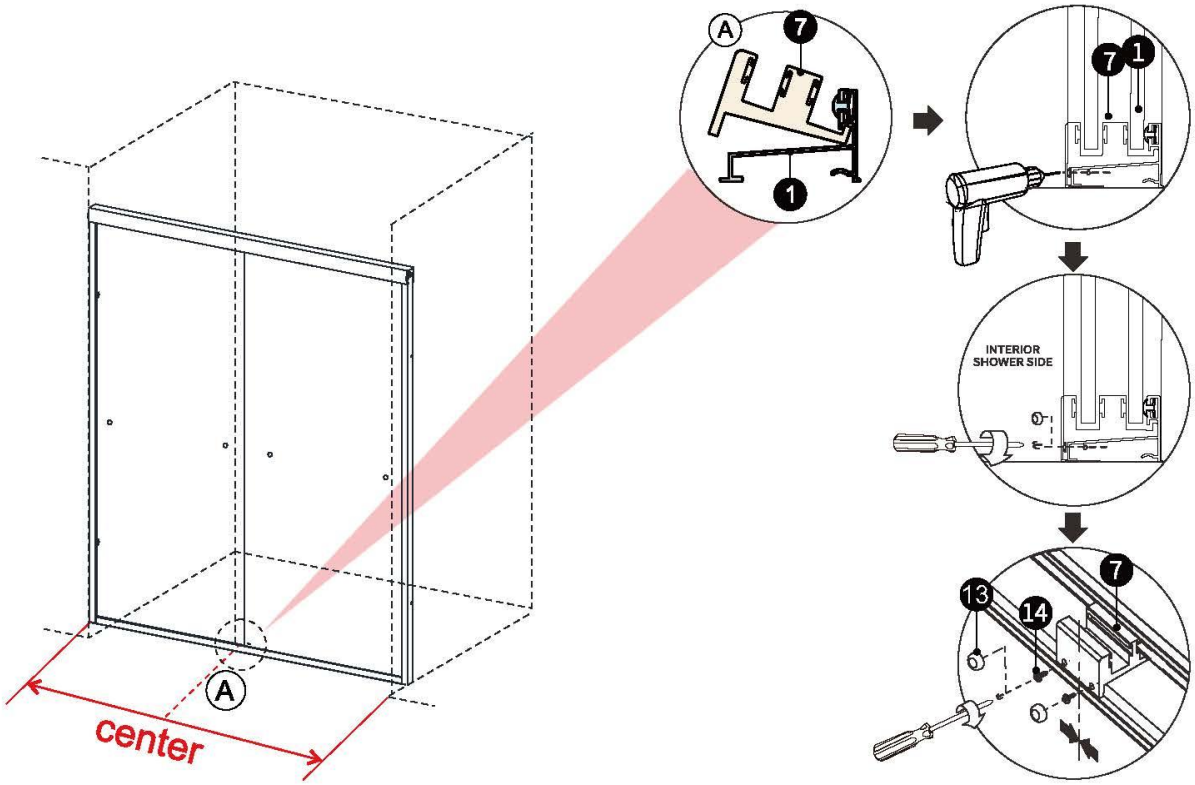

Step 7

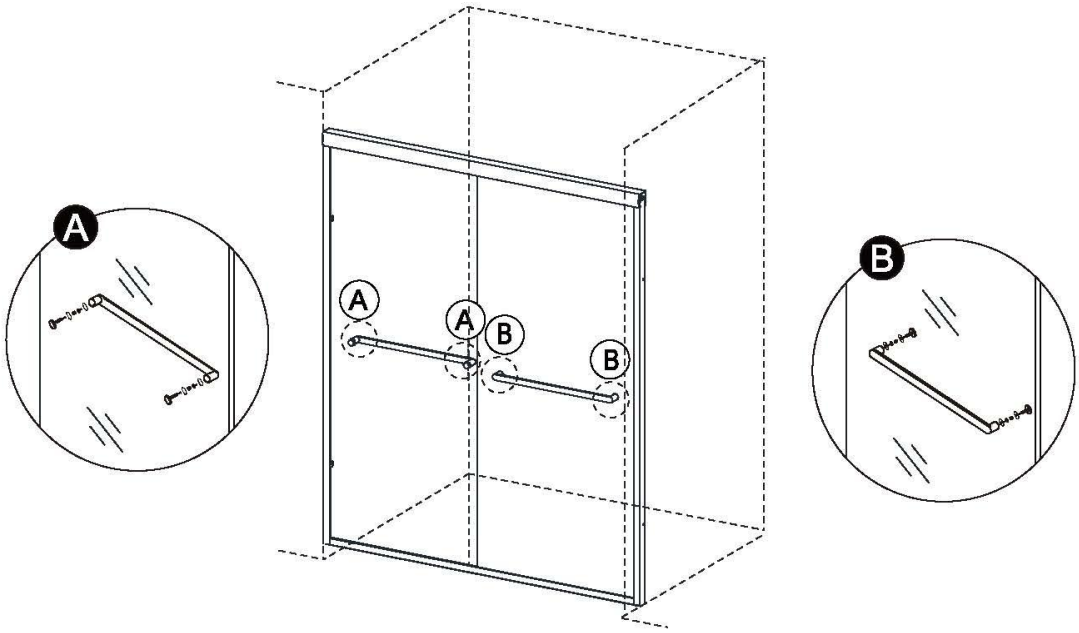

Step 8

24 HOURS

Allow 24 hours for silicone to dry before use.

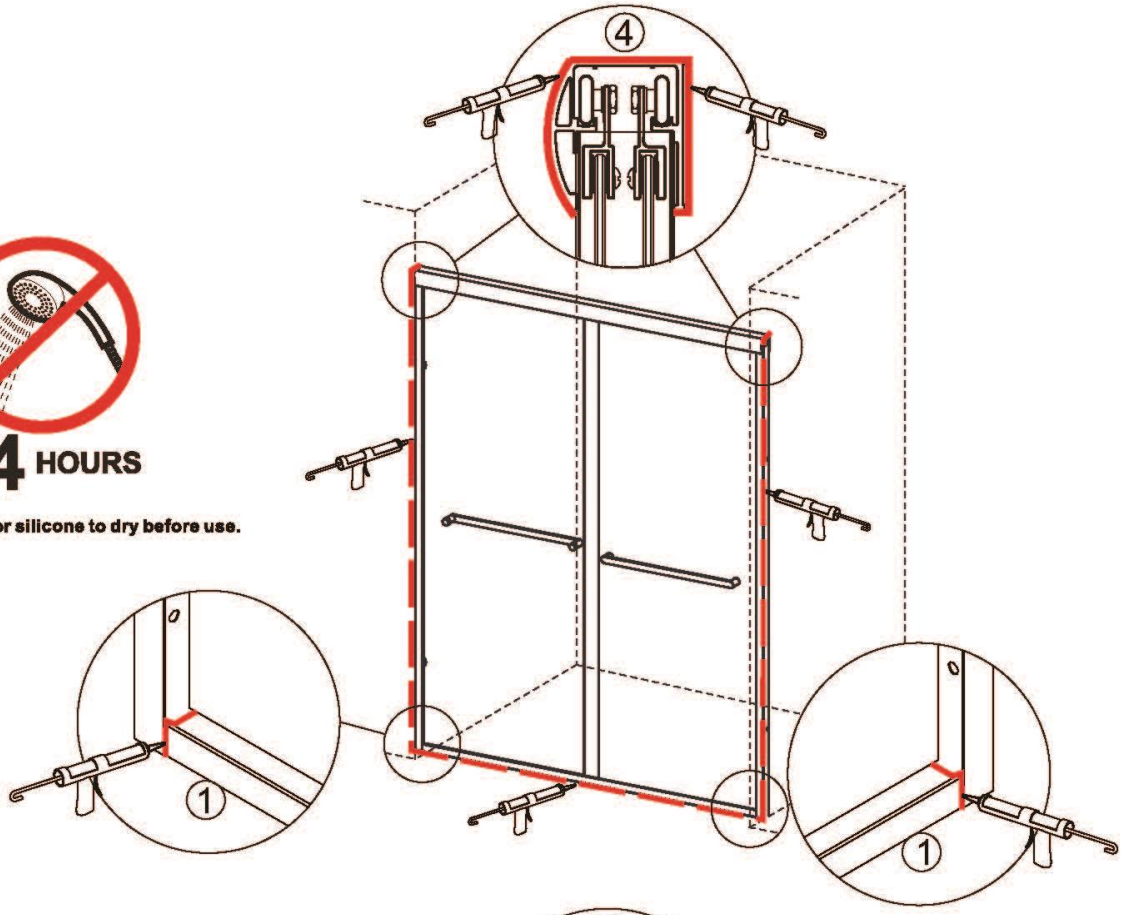

24 HOURS

Allow 24 hours for silicone to dry before use.

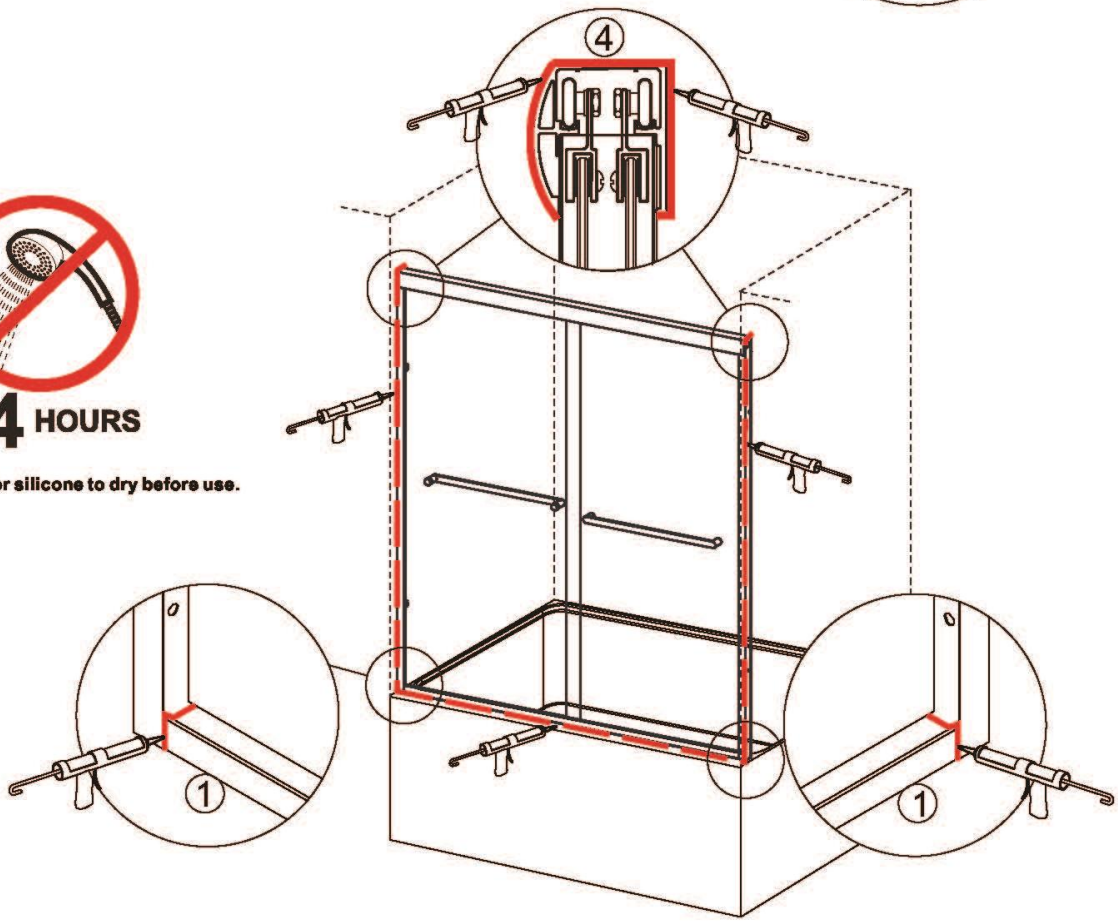

◆ Product Maintenance

BASES and BACKWALLS: To ensure long lasting life for your acrylic back walls: wipe them off after each use with a soft cloth. To clean the acrylic back walls use non-abrasive sprays or cream based cleaners. Avoid the use of aerosol spray cleaners. Never use abrasive cleansers, metal brushes or scrapers that could scratch or dull the surface.

GLASS: To ensure long lasting life for your glass shower products: wipe them off after each use with a soft cloth. Rinse and wipe off the glass using either a soft cloth or a squeegee to prevent soap buildup and water spots (Hard water can etch the surface of the glass over time if left to dry). To prevent scratching the surface: never use abrasive cleaners or cleaning products that contain scouring agents. Never use bristle brushes or abrasive sponges that may scratch the surface.

HARDWARE: To ensure a long lasting finish: wipe off the metal parts after each use with a soft cloth. Do not use abrasive cleaners or cleaning products containing ammonia, bleach or acid. If accidentally used, rinse the surface as soon as possible to prevent damage to the finish (peeling or corrosion). After cleaning the polished finishes, rinse thoroughly and wipe dry with soft cloth. Clean stainless steel surfaces at least once a week. When applying stainless steel cleaner or polish to stainless steel hardware, work with (not across) the grain. Never use an abrasive sponge or cloth, steel wool or wired brush as these may permanently scratch the surfaces.

NOTE: To maximize the life of your door, it is important to regularly inspect the glass and other hardware for misalignment, proper attachment, and/or damage. Contact us with any questions or concerns.

Please provide the belowing information if you have any qaustions.

1. order number:
2. description of the issue:
3. who install it? installer or yourself?
4. some photos or video of the issue:
5. If you need replacement parts, please circle the part you need on the page 2, then send the photo to us.
6. your address and phone number (if you need something re-shiped) :

We will give you a solution as soon as possible.

Customer service:

For more information about our products, please contact us below:

US:+1(909)929-2220 sales@waterpar.com

Do not return product to the store. Contact us directly with any questions.