Installation Steps：

①

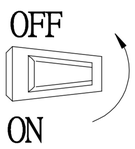

1. Turn off the power.

②

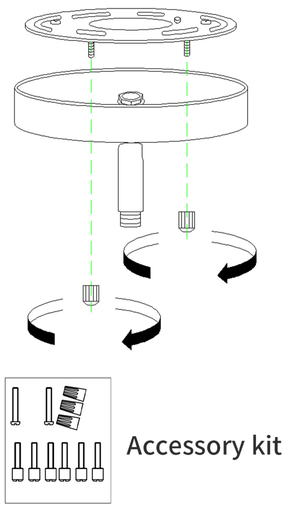

2. Break the universal angle straight, unscrew the two plates to install the accessories (F).

③

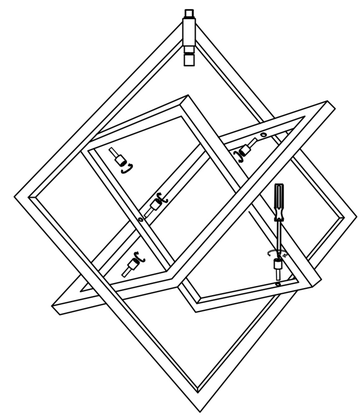

3. The light body has three frames in total. First use the accessories (K) to fix the outer frame (H) and the middle frame (I), then use the accessories (K) to fix the inner frame (J). Finally, use a screwdriver to tighten the fittings (K), and the assembly of the light body frame is completed.

④

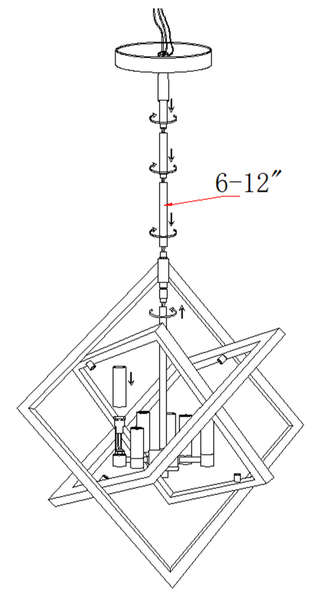

4. Put the sleeve (N) on the lamp head, the power cord needs to go through six straight pipes (G) and discs (E), tighten the straight pipes (G) from bottom to top, the top straight pipe uses a straight pipe without knuckle teeth (O) and finally tighten the

⑤

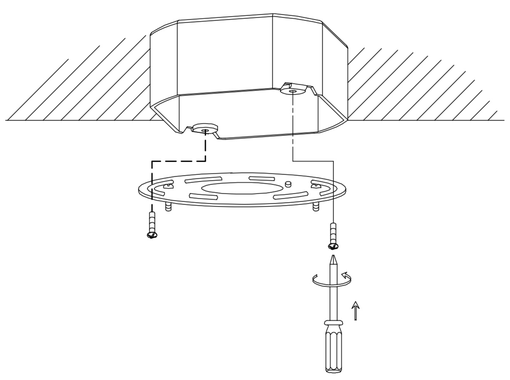

5. Use two machine wire (B) to tighten the pegboard (D) and junction box (A) and install the pegboard (D).

⑥

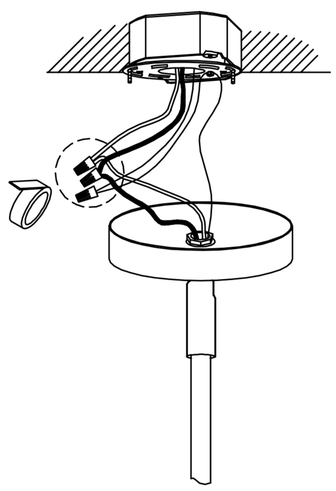

6. Correspond and connect the positive, negative and ground wires with the power line, and wrap the terminal cap (C) with adhesive tape.

⑦

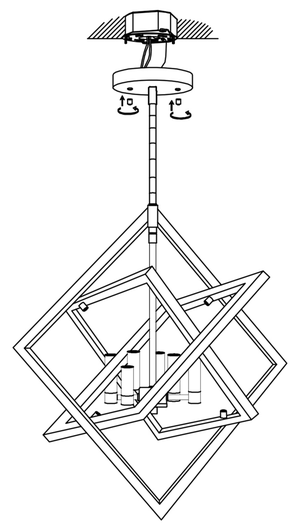

7. Lift the whole lamp upward, align the two holes on the disc (E) with the machine wire (B) of the pegboard (D), then tighten the fittings (F) and hang the lamp holder.

⑧

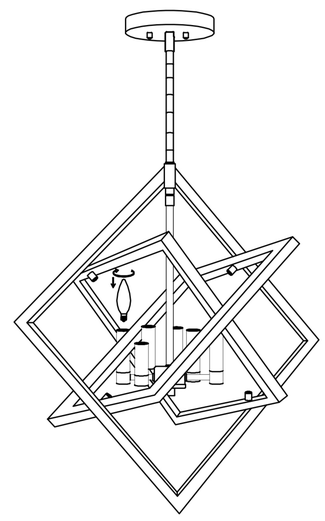

8. Install the bulb.

⑨

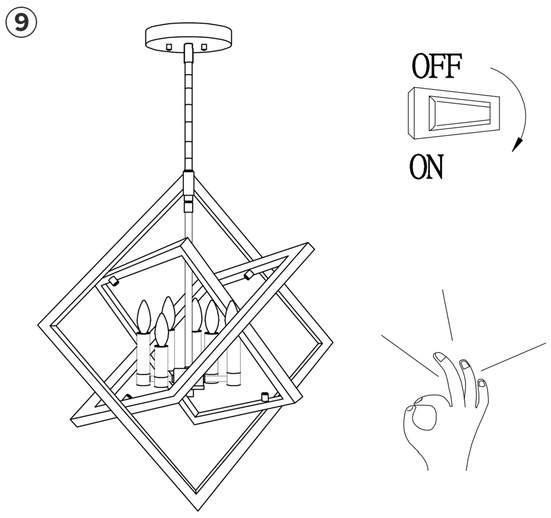

9. Installation is complete, turn on the light.

Notice： This light fixture should be installed in accordance with all applicable, local installation codes, and by a person familiar with the construction and operation of it, as well as the hazards involved. Inspect items and contents carefully. If any damage or defect is found, do not install it.

Accessories：
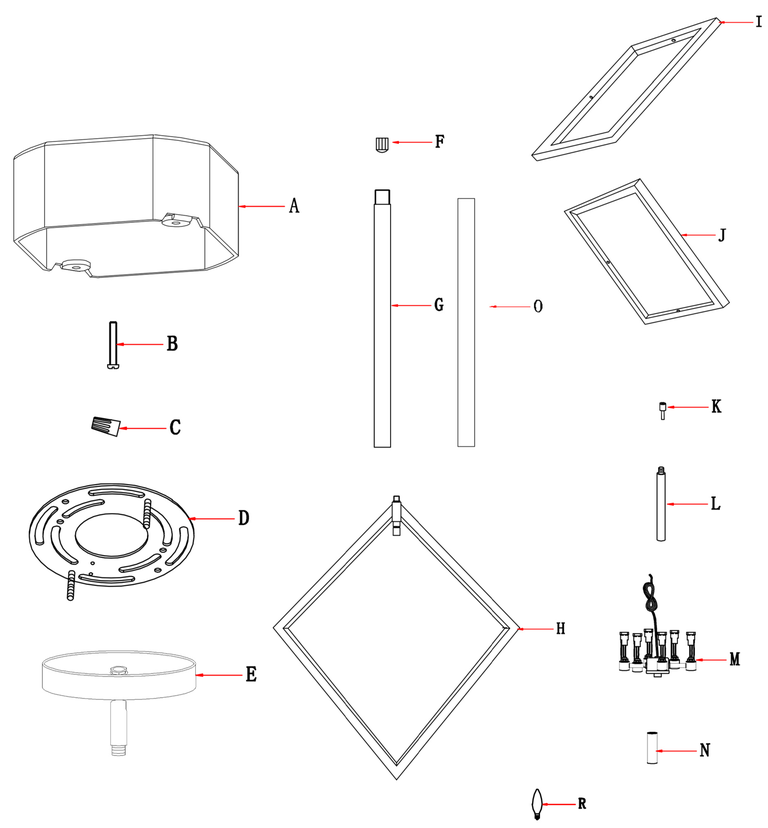
A: Junction box*0
B: Inch cross plate head machine wire*2
C: U.S. standard wiring cap * 3
D: eight hanging plate * 1
E: disc * 1
F: decorative grain *2
G: straight pipe *5
H: square frame (outside)*1
I: square frame (middle)*1
J: square frame (inside)*1
K: a slot cylindrical decorative grain * 6
L: round tube *1
M: lamp head * 1
N: Casing *6
O: Straight pipe*1
R: Bulb*0